2006 MDX

Owner's Manual
(Unlinked)

This document does not contain hyperlinks and may be formatted for printing instead of web us. This is due to changes in content and specifications of the vehicle that happen throughout the model year. This manual will be replaced with a hyperlinked version at the end of the model year.

© 2006 Honda Motor Co., Ltd.

P/N 31S3V650

Owner's Identification

OWNER _____

_____

ADDRESS _____
STREET

_____ _____ _____
CITY STATE/PROVINCE ZIP CODE/ POSTAL CODE

V. I. N. _____

DELIVERY DATE _____
(Date sold to original retail purchaser)

DEALER NAME _____ DEALER NO. _____

ADDRESS _____
STREET

_____ _____ _____
CITY STATE/PROVINCE ZIP CODE/ POSTAL CODE

OWNER'S SIGNATURE _____

DEALER'S SIGNATURE _____

This owner's manual should be considered a permanent part of the vehicle and should remain with the vehicle when it is sold.

This owner's manual covers all models of the MDX. You may find descriptions of equipment and features that are not on your particular model.

The information and specifications included in this publication were in effect at the time of approval for printing. Honda Motor Co., Ltd. reserves the right, however, to discontinue or change specifications or design at any time without notice and without incurring any obligation whatsoever.

POUR CLIENTS CANADIEN
AVIS IMPORTANT: Si vous avez besoin d'un Manuel du Conducteur en français, veuillez demander à votre concessionnaire de commander le numéro de pièce 33S3V850

Introduction

Congratulations! Your selection of a 2006 Acura MDX was a wise investment. It will give you years of driving pleasure.

One of the best ways to enhance the enjoyment of your new Acura is to read this manual. In it, you will learn how to operate its driving controls and convenience items. Afterwards, keep this owner's manual in your vehicle so you can refer to it at any time.

Several warranties protect your new vehicle. Read the warranty booklet thoroughly so you understand the coverages and are aware of your rights and responsibilities.

Maintaining your vehicle according to the schedules given in this manual helps to keep your driving trouble-free while it preserves your investment. When your vehicle needs maintenance, keep in mind that your Acura dealer's staff is specially trained in servicing the many systems unique to your Acura. Your Acura dealer is dedicated to your satisfaction and will be pleased to answer any questions and concerns.

As you read this manual, you will find information that is preceded by a NOTICE symbol. This information is intended to help you avoid damage to your vehicle, other property, or the environment.

California Proposition 65 Warning

WARNING: This product contains or emits chemicals known to the state of California to cause cancer and birth defects or other reproductive harm.

Event Data Recorders

This vehicle is equipped with one or more recording devices commonly referred to as "event data recorders" or "sensing and diagnostic modules."

A Few Words About Safety

Your safety, and the safety of others, is very important. And operating this vehicle safely is an important responsibility.

To help you make informed decisions about safety, we have provided operating procedures and other information on labels and in this manual. This information alerts you to potential hazards that could hurt you or others.

Of course, it is not practical or possible to warn you about all the hazards associated with operating or maintaining your vehicle. You must use your own good judgement.

You will find this important safety information in a variety of forms, including:

- **Safety Labels** — on the vehicle.
- **Safety Messages** — preceded by a safety alert symbol ⚠ and one of three signal words: **DANGER**, **WARNING**, or **CAUTION**. These signal words mean:

⚠ DANGER	You WILL be KILLED or SERIOUSLY HURT if you don't follow instructions.
⚠ WARNING	You CAN be KILLED or SERIOUSLY HURT if you don't follow instructions.
⚠ CAUTION	You CAN be HURT if you don't follow instructions.

- **Safety Headings** — such as Important Safety Reminders or Important Safety Precautions.
- **Safety Section** — such as Driver and Passenger Safety.
- **Instructions** — how to use this vehicle correctly and safely.

This entire book is filled with important safety information — please read it carefully.

Important Handling Information

Your MDX has higher ground clearance than a passenger vehicle designed for use only on pavement. Higher ground clearance has many advantages for off-highway driving. It allows you to travel over bumps, obstacles, and rough terrain. It also provides good visibility so you can anticipate problems earlier.

These advantages come at some cost. Because your vehicle is taller and rides higher off the ground, it has a high center of gravity. This means your vehicle can tip or roll over if you make abrupt turns. Utility vehicles have a significantly higher rollover rate than other types of vehicles. In a rollover crash, an unbelted person is significantly more likely to die than a person wearing a seat belt. As a reminder, make sure you and your passengers always wear seat belts.

For information on how to reduce the risk of rollover, read "Driving Guidelines" on page 200 of this manual and the *Off-Highway Driving Guidelines* section on page 224. Failure to operate your vehicle correctly might result in loss of control or an accident.

Contents

Your Vehicle at a Glance (main controls) 4
Driver and Passenger Safety (seat belts, SRS, and child protection) 7
Instruments and Controls (indicators, gauges, dashboard, and steering column) 57
Features (climate, audio, rear entertainment, steering wheel, security, cruise control, HomeLink and Onstar) 105
Before Driving (fuel, vehicle break-in, and cargo loading) 187
Driving (engine and transmission operation) 199
Maintenance (schedules, fluid checking, minor services, and vehicle storage) 227
Taking Care of the Unexpected (flat tire, dead battery, overheating, fuses) 259
Technical Information (vehicle specifications, tires, fuels, and emissions controls) 283
Warranty and Customer Relations (U.S. and Canada only) (warranty and contact information) 297
Authorized Manuals (U.S. only) (how to order) 301
Index I
Service Information Summary (fluid capacities and tire pressures) ..... last page

Overview of Contents

Contents
A convenient reference to the sections in this manual.

Your Vehicle at a Glance
A quick reference to the main controls in your vehicle.

Driver and Passenger Safety
Important information about the proper use and care of your vehicle's seat belts, an overview of the Supplemental Restraint System, and valuable information on how to protect children with child restraints.

Instruments and Controls
Explains the purpose of each instrument panel indicator and gauge, and how to use the controls on the dashboard and steering column.

Features
How to operate the heating and air conditioning system, the audio system, and other convenience features.

Before Driving
What gasoline to use, how to break-in your new vehicle, and how to load luggage and other cargo.

Driving
The proper way to start the engine, shift the transmission, and park; plus what you need to know if you're planning to tow a trailer.

Maintenance
The maintenance schedule shows you when you need to take your vehicle to the dealer. There is also a list of things to check and instructions on how to check them.

Taking Care of the Unexpected
This section covers several problems motorists sometimes experience, and details how to handle them.

Technical Information
ID numbers, dimensions, capacities, and technical information.

Warranty and Customer Relations (U.S. and Canada only)
A summary of the warranties covering your new Acura, and how to contact us for any reason. Refer to your warranty manual for detailed information.

Authorized Manuals (U.S. only)
How to order manuals and other technical literature.

Index

Service Information Summary
A summary of the information you need when you pull up to the fuel pump.

Your Vehicle at a Glance

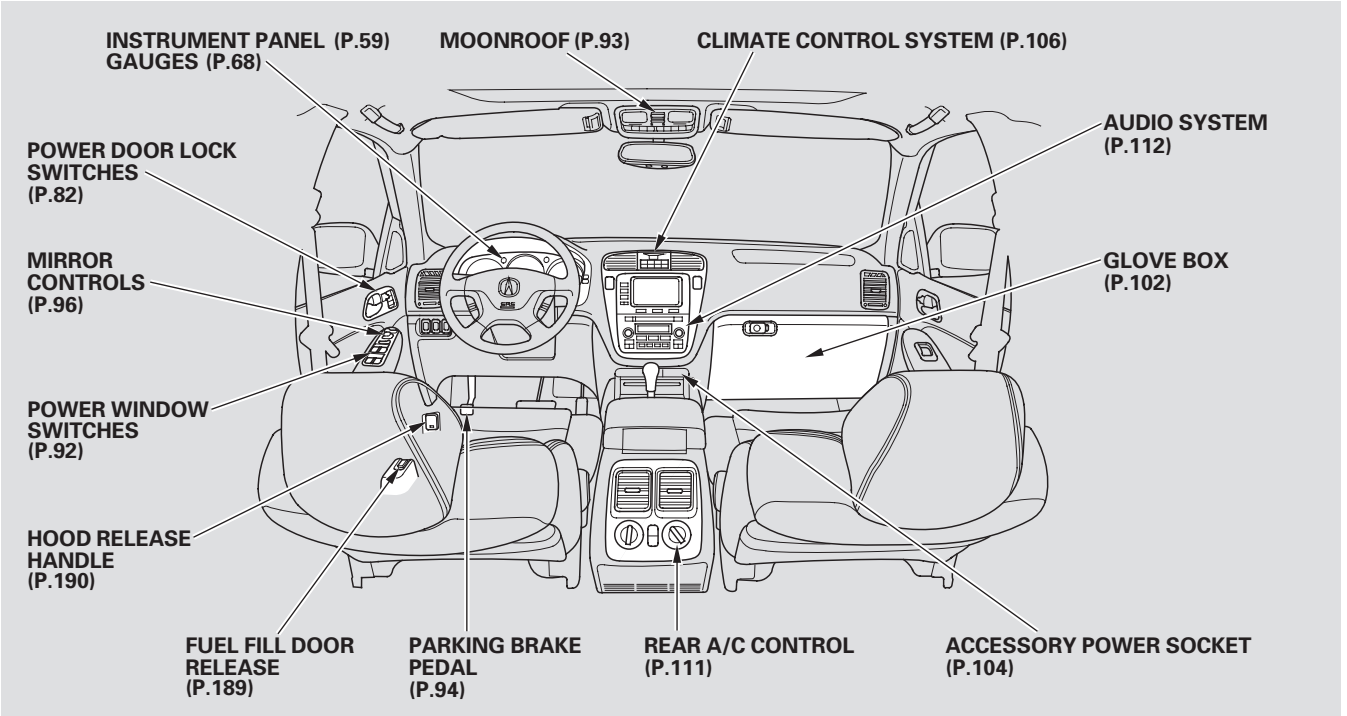

Your Vehicle at a Glance

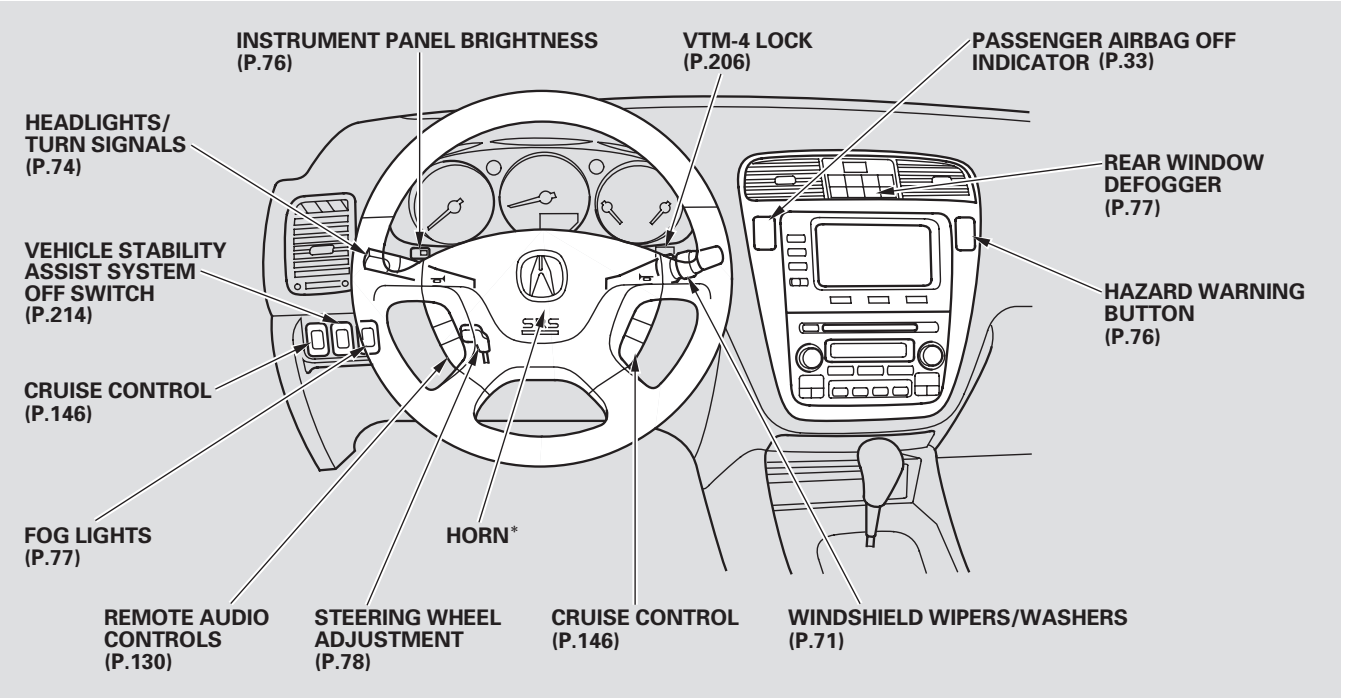

*: To use the horn, press the pad around the "A" logo.

Driver and Passenger Safety

This section gives you important information about how to protect yourself and your passengers. It shows you how to use seat belts properly. It explains how your airbags work, and it tells you how to properly restrain infants and children in your vehicle.

Important Safety Precautions 8
Your Vehicle's Safety Features..... 9
Protecting Adults and Teens..... 13
1. Close and Lock the Doors..... 13
2. Adjust the Front Seats 13
3. Adjust the Seat-Backs 14
4. Adjust the Head Restraints 15
5. Fasten and Position the Seat Belts 16
6. Maintain a Proper Sitting Position 18
Advice for Pregnant Women..... 18
Additional Safety Precautions.... 19
Additional Information About Your Seat Belts..... 21
Seat Belt System Components... 21
Lap/Shoulder Belt..... 21
Automatic Seat Belt Tensioners..... 22
Seat Belt Maintenance..... 23
Additional Information About Your Airbags..... 24
Airbag System Components..... 24
How Your Front Airbags Work..... 26
Advanced Airbag 28
How Your Side Airbags Work.... 29
How Your Side Curtain Airbag Work..... 31
How the SRS Indicator Works ... 32
How The Side Airbag Off Indicator Works..... 32
How the Passenger Airbag Off Indicator Works..... 33
Airbag Service..... 33
Additional Safety Precautions.... 34
Protecting Children — General Guidelines..... 35
All Children Must Be Restrained 35
All Children Should Sit in a Back Seat..... 36
The Passenger's Front Airbag Can Pose Serious Risks 36
If You Must Drive with Several Children 38
If a Child Requires Close Attention 38
Additional Safety Precautions.... 38
Protecting infants and Small Children..... 40
Protecting Infants..... 40
Protecting Small Children 41
Selecting a Child Seat..... 43
Installing a Child Seat 44
With LATCH..... 45
With a Lap/Shoulder Seat Belt.. 47
With a Tether..... 48
Protecting Larger Children..... 50
Checking Seat Belt Fit 51
Using a Booster Seat..... 51
When Can a Child Sit in Front..... 52
Additional Safety Precautions..... 53
Carbon Monoxide Hazard 54
Safety Labels..... 55

Important Safety Precautions

You'll find many safety recommendations throughout this section, and throughout this manual. The recommendations on this page are the ones we consider to be the most important.

Always Wear Your Seat Belt
A seat belt is your best protection in all types of collisions. Airbags are designed to supplement seat belts, not replace them. So even though your vehicle is equipped with airbags, make sure you and your passengers always wear your seat belts, and wear them properly (see page 16).

Restrain All Children
Children age 12 and under should ride properly restrained in a back seat. Infants and small children should be restrained in a child seat. Larger children should use a booster and a lap/shoulder belt until they can use the belt properly without a booster (see page 51).

Be Aware of Airbag Hazards
While airbags can save lives, they can cause serious or fatal injuries to occupants who sit too close to them, or are not properly restrained. Infants, young children, and short adults are at the greatest risk. Be sure to follow all instructions and warnings in this manual.

Don't Drink and Drive
Alcohol and driving don't mix. Even one drink can reduce your ability to respond to changing conditions, and your reaction time gets worse with every additional drink. So don't drink and drive, and don't let your friends drink and drive, either.

Control Your Speed
Excessive speed is a major factor in crash injuries and deaths. Generally, the higher the speed, the greater the risk, but serious injuries can also occur at lower speeds. Never drive faster than is safe for current conditions, regardless of the maximum speed posted.

Keep Your Vehicle in Safe Condition
Having a tire blowout or a mechanical failure can be extremely hazardous. To reduce the possibility of such problems, check your tire pressures and condition frequently, and perform all regularly scheduled maintenance (see page 231).

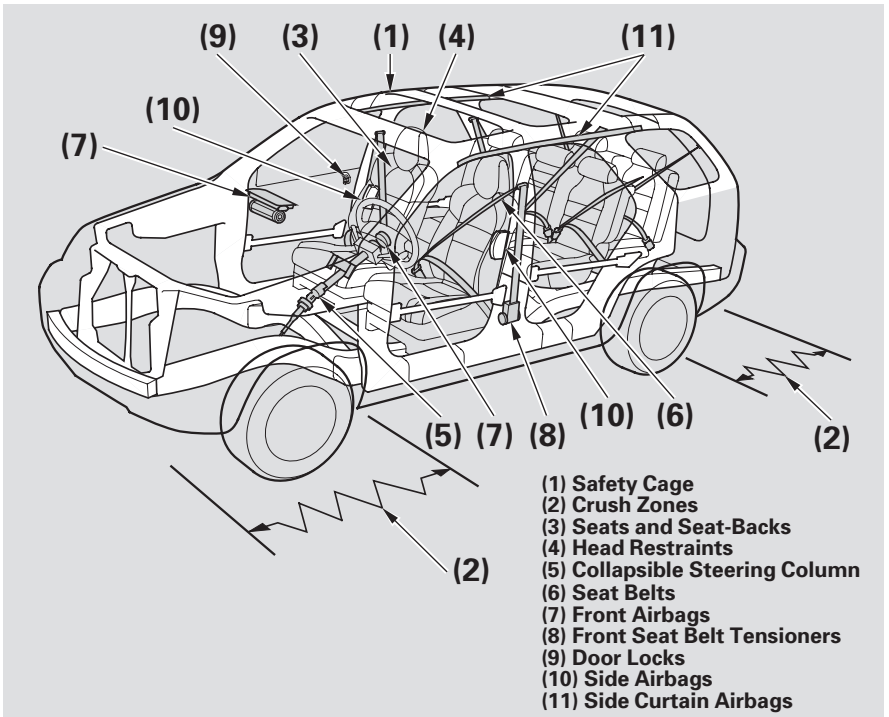

Your vehicle is equipped with many features that work together to protect you and your passengers during a crash.

Some features do not require any action on your part. These include a strong steel framework that forms a safety cage around the passenger compartment; front and rear crush zones; a collapsible steering column; and tensioners that tighten the front seat belts in a crash.

CONTINUED

However, you and your passengers can't take full advantage of these features unless you remain sitting in a proper position and ***always wear your seat belts***. In fact, some safety features can contribute to injuries if they are not used properly.

The following pages explain how you can take an active role in protecting yourself and your passengers.

Seat Belts
Your vehicle is equipped with seat belts in all seating positions.

Your seat belt system also includes an indicator on the instrument panel to remind you and your passengers to fasten your seat belts.

Why Wear Seat Belts
Seat belts are the single most effective safety device for adults and larger children. (Infants and smaller children must be properly restrained in child seats.)

Not wearing a seat belt properly increases the chance of serious injury or death in a crash, even though your vehicle has airbags.

In addition, most states and all Canadian provinces require you to wear seat belts.

⚠ WARNING

Not wearing a seat belt properly increases the chance of serious injury or death in a crash, even though your vehicle has airbags.

Be sure you and your passengers always wear seat belts and wear them properly.

When properly worn, seat belts:

- Keep you connected to the vehicle so you can take advantage of the vehicle's built-in safety features.
- Help protect you in almost every type of crash, including frontal, side, and rear impacts and rollovers.

- Help keep you from being thrown against the inside of the vehicle and against other occupants.
- Keep you from being thrown out of the vehicle.
- Help keep you in a good position should the airbags ever deploy. A good position reduces the risk of injury from an inflating airbag and allows you to get the best advantage from the airbag.

Of course, seat belts cannot completely protect you in every crash. But in most cases, seat belts can reduce your risk of serious injury.

What you should do: Always wear your seat belt, and make sure you wear it properly.

Airbags

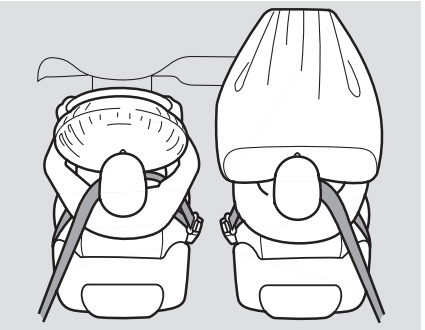

Your vehicle has a supplemental restraint system (SRS) with front airbags to help protect the heads and chests of the driver and a front seat passenger during a moderate to severe frontal collision (see page 26 for more information on how your front airbags work).

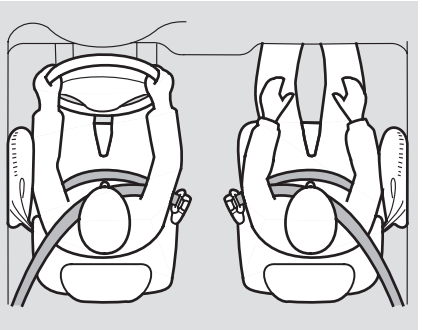

Your vehicle also has side airbags to help protect the upper torso of the driver or a front seat passenger during a moderate to severe side impact (see page 29 for more information on how your side airbags work).

CONTINUED

Your Vehicle's Safety Features

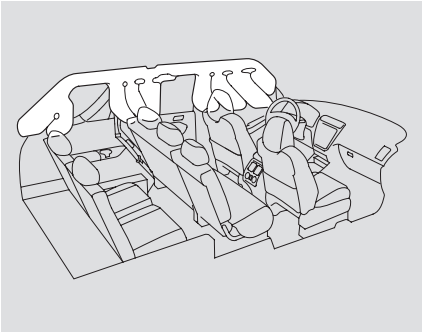

Your vehicle also has side curtain airbags to help protect the heads of the driver, front passenger, and passengers in the outer rear seating positions during a moderate to severe side impact or rollover (see page 31 for more information on how your side curtain airbags work).

The most important things you need to know about your airbags are:

- ***Airbags do not replace seat belts.*** They are designed to supplement the seat belts.
- ***Airbags offer no protection in rear impacts, or minor frontal or side collisions.***
- ***Airbags can pose serious hazards.*** To do their job, airbags must inflate with tremendous force. So while airbags help save lives, they can cause minor injuries or more serious or even fatal injuries if occupants are not properly restrained or sitting properly.

What you should do: Always wear your seat belt properly, and sit upright and as far back from the steering wheel as possible while allowing full control of the vehicle. A front passenger should move their seat as far back from the dashboard as possible.

The rest of this section gives more detailed information about how you can maximize your safety.

Remember, however, that no safety system can prevent all injuries or deaths that can occur in a severe crash, even when seat belts are properly worn and the airbags deploy.

Introduction
The following pages provide instructions on how to properly protect the driver, adult passengers, and teenagers who are large enough and mature enough to ride in the front seat.

See pages 35 — 39 for important guidelines on how to properly protect infants, small children, and larger children who ride in your vehicle.

1.Close and Lock the Doors
After everyone has entered the vehicle, be sure the doors and tailgate are closed and locked.

Your vehicle has a door and tailgate monitor indicator on the instrument panel to indicate when a specific door or the tailgate is not tightly closed.

Locking the doors reduces the chance of someone being thrown out of the vehicle during a crash, and it helps prevent passengers from accidentally opening a door and falling out.

Locking the doors also helps prevent an outsider from unexpectedly opening a door when you come to a stop.

See page 82 for how to lock the doors, and page 62 for how the door and tailgate monitor indicator works.

2.Adjust the Front Seats

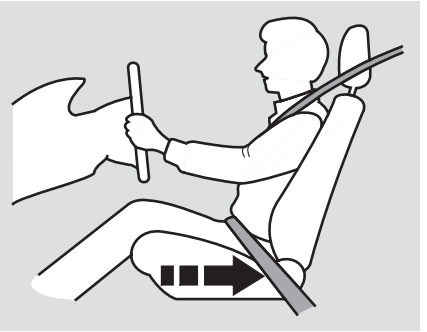

Adjust the driver's seat as far to the rear as possible while allowing you to maintain full control of the vehicle. Have a front passenger adjust their seat as far to the rear as possible.

CONTINUED

If you sit too close to the steering wheel or dashboard, you can be seriously injured by an inflating front airbag, or by striking the steering wheel or dashboard.

The National Highway Traffic Safety Administration and Transport Canada recommend that drivers allow at least 10 inches (25 cm) between the center of the steering wheel and the chest.

If you cannot get far enough away from the steering wheel and still reach the controls, we recommend that you investigate whether some type of adaptive equipment may help.

⚠WARNING

Sitting too close to a front airbag can result in serious injury or death if the front airbags inflate.

Always sit as far back from the front airbags as possible.

If your seat is adjusted manually, rock it back and forth to make sure the seat is locked in position. See page 86 for more information on how to adjust the front seats.

3.Adjust the Seat-Backs

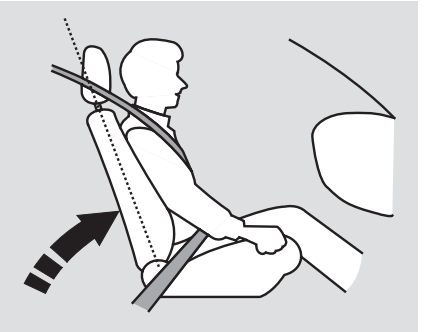

Adjust the driver's seat-back to a comfortable, upright position, leaving ample space between your chest and the airbag cover in the center of the steering wheel.

Passengers with adjustable seat-backs should also adjust their seat-back to a comfortable, upright position.

⚠WARNING

Reclining the seat-back too far can result in serious injury or death in a crash.

Adjust the seat-back to an upright position, and sit well back in the seat.

Reclining a seat-back so that the shoulder part of the belt no longer rests against the occupant's chest reduces the protective capability of the belt. It also increases the chance of sliding under the belt in a crash and being seriously injured. The farther a seat-back is reclined, the greater the risk of injury.

See page 86 for how to adjust the seat-backs.

4.Adjust the Head Restraints

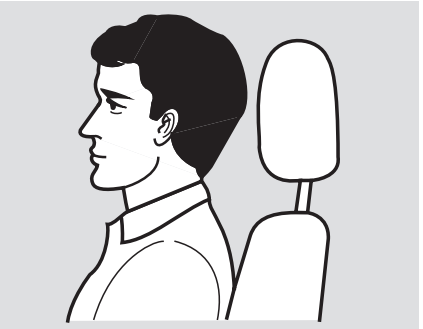

Adjust the driver's head restraint so the back of your head rests against the center of the restraint.

Have passengers with adjustable head restraints adjust their restraints properly as well. Taller persons should adjust their restraint as high as possible.

⚠WARNING

Improperly positioning head restraints reduces their effectiveness and you can be seriously injured in a crash.

Make sure head restraints are in place and positioned properly before driving.

Properly adjusted head restraints will help protect occupants from whiplash and other crash injuries.

See page 88 for how to adjust the head restraints.

CONTINUED

5. Fasten and Position the Seat Belts

Insert the latch plate into the buckle, then tug on the belt to make sure the belt is securely latched. Check that the belt is not twisted, because a twisted belt can cause serious injuries in a crash.

The second row center seat, and both third row seats, have a detachable shoulder belt that can be unlatched and retracted, to allow the seats to be folded down. See page 88 for how to unlatch and relatch the seat belts.

Position the lap part of the belt as low as possible across your hips, then pull up on the shoulder part of the belt so the lap part fits snugly. This lets your strong pelvic bones take the force of a crash and reduces the chance of internal injuries.

If necessary, pull up on the shoulder belt again to remove any slack, then check that the belt rests across the center of your chest and over your shoulder.

This spreads the forces of a crash over the strongest bones in your upper body.

⚠ WARNING

Improperly positioning the seat belts can cause serious injury or death in a crash.

Make sure all seat belts are properly positioned before driving.

If the seat belt touches or crosses your neck, or if it crosses your arm instead of your shoulder, you need to adjust the seat belt anchor height.

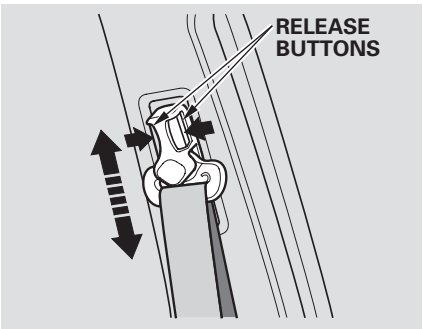

The front seats have adjustable seat belt anchors.
To adjust the height of a belt anchor, squeeze the two release buttons and slide the anchor up or down as needed (it has four positions).

Never place the shoulder portion of a lap/shoulder belt under your arm or behind your back. This could cause very serious injuries in a crash.

If a seat belt does not seem to work as it should, it may not protect the occupant in a crash.

No one should sit in a seat with an inoperative seat belt. Using a seat belt that is not working properly can result in serious injury or death. Have your dealer check the belt as soon as possible.

See page 21 for additional information about your seat belts and how to take care of them.

6. Maintain a Proper Sitting Position

After all occupants have adjusted their seats and put on seat belts, it is very important that they continue to sit upright, well back in their seats, with their feet on the floor, until the vehicle is parked and the engine is off.

Sitting improperly can increase the chance of injury during a crash. For example, if an occupant slouches, lies down, turns sideways, sits forward, leans forward or sideways, or puts one or both feet up, the chance of injury during a crash is greatly increased.

In addition, an occupant who is out of position in the front seat can be seriously or fatally injured in a crash by striking interior parts of the vehicle or being struck by an inflating front airbag.

⚠ WARNING

Sitting improperly or out of position can result in serious injury or death in a crash.

Always sit upright, well back in the seat, with your feet on the floor.

Advice for Pregnant Women

If you are pregnant, the best way to protect yourself and your unborn child when driving or riding in a vehicle is to always wear a seat belt, and keep the lap part of the belt as low as possible across the hips.

When driving, remember to sit upright and adjust the seat as far back as possible while allowing full control of the vehicle. When riding as a front passenger, adjust the seat as far back as possible.

This will reduce the risk of injuries to both you and your unborn child that can be caused by a crash or an inflating front airbag.

Each time you have a checkup, ask your doctor if it's okay for you to drive.

Additional Safety Precautions

- ***Never let passengers ride in the cargo area or on top of a folded-down back seat.*** If they do, they could be very seriously injured in a crash.

- ***Passengers should not stand up or change seats while the vehicle is moving.*** A passenger who is not wearing a seat belt during a crash or emergency stop can be thrown against the inside of the vehicle, against other occupants, or out of the vehicle.

- ***Two people should never use the same seat belt.*** If they do, they could be very seriously injured in a crash.

- ***Do not put any accessories on seat belts.*** Devices intended to improve occupant comfort or reposition the shoulder part of a seat belt can reduce the protective capability of the seat belt and increase the chance of serious injury in a crash.

- ***Do not place hard or sharp objects between yourself and a front airbag.*** Carrying hard or sharp objects on your lap, or driving with a pipe or other sharp object in your mouth, can result in injuries if your front airbag inflates.

CONTINUED

- ***Keep your hands and arms away from the airbag covers.*** If your hands or arms are close to an airbag cover, they could be injured if the airbag inflates.

- ***Do not attach or place objects on the front airbag covers.*** Objects on the covers marked “SRS AIRBAG” could interfere with the proper operation of the airbags or be propelled inside the vehicle and hurt someone if the airbags inflate.

- ***Do not attach hard objects on or near a door.*** If a side airbag or a side curtain airbag inflates, a cup holder or other hard object attached on or near the door could be propelled inside the vehicle and hurt someone.

Seat Belt System Components
Your seat belt system includes lap/shoulder belts in all seven seating positions. The front seat belts are also equipped with automatic seat belt tensioners.

The seat belt system includes an indicator on the instrument panel and a beeper to remind you and your passengers to fasten your seat belts.

If you turn the ignition switch to the ON (II) position before fastening your seat belt, the beeper will sound, and the indicator will flash.
If you do not fasten your seat belt before the beeper stops, the indicator will stop flashing but remain on.

If you continue driving without fastening your seat belt, the beeper will sound and the indicator will flash again at regular intervals.

Lap/Shoulder Belt
The lap/shoulder belts in the center seat of the second row and both of the third row seats are equipped with a detachable anchor that has two parts: a small latch plate and a buckle.

The detachable anchor should normally be latched whenever the seats-backs are in an upright position.

The lap and shoulder belt goes over your shoulder, across your chest, and across your hips.

To fasten the belt, insert the latch plate into the buckle, then tug on the belt to make sure the buckle is latched (see page 16 for how to properly position the belt).

To unlock the belt, press the red PRESS button on the buckle. Guide the belt across your body so that it retracts completely. After exiting the vehicle, be sure the belt is out of the way and will not get closed in the door.

All seat belts have an emergency locking retractor. In normal driving, the retractor lets you move freely in your seat while it keeps some tension on the belt. During a collision or sudden stop, the retractor automatically locks the belt to help restrain your body.

CONTINUED

Additional Information About Your Seat Belts

The seat belts in all seating positions except the driver's have an additional locking mechanism that must be activated to secure a child seat (see page 47).

If the shoulder part of the belt is pulled all the way out, the locking mechanism will activate. The belt will retract, but it will not allow the passenger to move freely.

To deactivate the locking mechanism, unlatch the buckle and let the seat belt fully retract. To refasten the belt, pull it out only as far as needed.

Automatic Seat Belt Tensioners

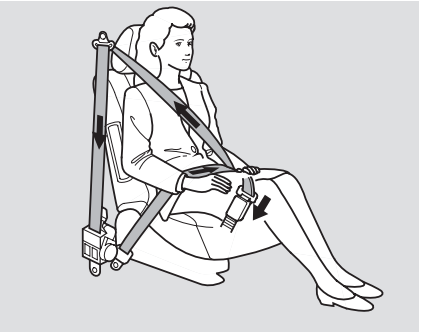

For added protection, the front seat belts are equipped with automatic seat belt tensioners. When activated, the tensioners immediately tighten the belts to help hold the driver and a front passenger in place.
The tensioners are designed to activate in any collision severe enough to cause the front airbags to deploy, or if a sensor detects your vehicle is about to roll over (see page 31).

If a side curtain airbag deploys during a side impact, the tensioner on that side of the vehicle will also deploy.

The tensioners can also be activated during a collision in which the front airbags *do not deploy*. In this case, the airbags would not be needed, but the additional restraint could be helpful.

When the tensioners are activated, the seat belts will remain tight until they are unbuckled in the normal manner.

If the front seat belt tensioners ever activate, they must be replaced as the belts will no longer retract properly.

Seat Belt Maintenance
For safety, you should check the condition of your seat belts regularly.

Pull each belt out fully, and look for frays, cuts, burns, and wear. Check that the latches work smoothly and the belts retract easily. If a belt does not retract easily, cleaning the belt may correct the problem (see page 249). Any belt that is not in good condition or working properly will not provide good protection and should be replaced as soon as possible.

Acura provides a lifetime warranty on seat belts for U.S. models. See your *Acura Warranty Information* booklet for details.

If a seat belt is worn during a crash, it must be replaced by the dealer. A belt that has been worn during a crash may not provide the same level of protection in a subsequent crash.

The dealer should also inspect the anchors for damage and replace them if needed. If the automatic seat belt tensioners activate during a crash, they must be replaced.

For information on how to clean your seat belts, see page 249 .

⚠ WARNING

Not checking or maintaining seat belts can result in serious injury or death if the seat belts do not work properly when needed.

Check your seat belts regularly and have any problem corrected as soon as possible.

Additional Information About Your Airbags

Airbag System Components

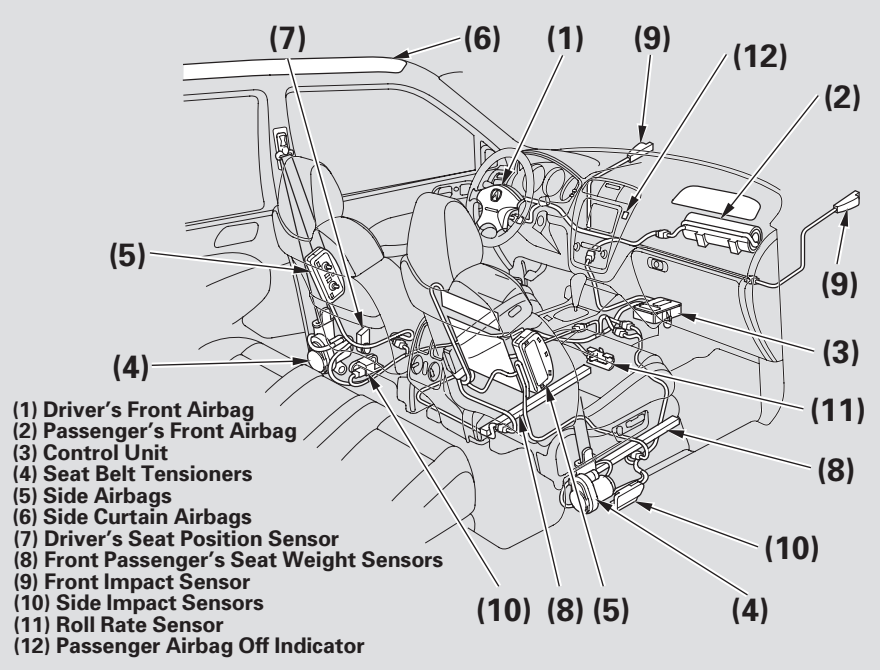

Your Airbag System (SRS) includes:

- Two SRS (Supplemental Restraint System) front airbags. The driver's airbag is stored in the center of the steering wheel; the front passenger's airbag is stored in the dashboard. Both are marked "SRS AIRBAG" (see page 26).
- Two side airbags, one for the driver and one for a front passenger. The airbags are stored in the outer edges of the seat-backs. Both are marked "SIDE AIRBAG" (see page 29).
- Two side curtain airbags, one for each side of the vehicle. The airbags are stored in the roof above the side windows. The front and rear pillars are marked "SIDE CURTAIN AIRBAG" (see page 31).

- Automatic front seat belt tensioners (see page 22).
- Sensors that can detect a moderate to severe front impact or side impact.
- Sensors that can detect whether a small person or child is in the passenger's side airbag path and signal the control unit to turn the airbag off (see page 32).
- A driver's seat position sensor that monitors the distance of the seat from the front airbag. If the seat is too far forward, the airbag will inflate with less force (see page 28).
- Weight sensors that monitor the weight on the front passenger's seat. If the weight of an infant or small child is detected, the passenger's front airbag will be turned off (see page 33).
- A rollover sensor that can detect if your vehicle is about to roll over and signal the control unit to deploy both side curtain airbags and front seat belt tensioners (see page 31).
- A sophisticated electronic system that continually monitors and records information about the sensors, the control unit, the airbag activators, the seat belt tensioners, and driver and front passenger seat belt use when the ignition switch is in the ON (II) position.
- An indicator on the instrument panel that alerts you to a possible problem with your airbags, sensors, or seat belt tensioners (see page 32).
- An indicator on the instrument panel that alerts you that the passenger's side airbag has been turned off (see page 32).
- An indicator on the dashboard that alerts you that the passenger's front airbag has been turned off (see page 33).
- Emergency backup power in case your vehicle's electrical system is disconnected in a crash.

Additional Information About Your Airbags

How Your Front Airbags Work

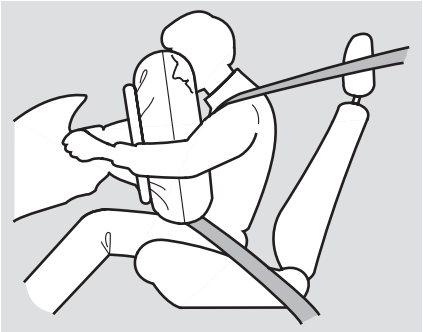

If you ever have a moderate to severe frontal collision, sensors will detect the vehicle's rapid deceleration.

If the rate of deceleration is high enough, the control unit will instantly inflate the driver's and front passenger's airbags, at the time and with the force needed.

During a frontal crash, your seat belt restrains your lower body and torso, and the front airbag helps protect your head and chest.

Although both airbags normally inflate within a split second of each other, it is possible for only one airbag to deploy.

This can happen if the severity of a collision is at the margin, or threshold, that determines whether or not the airbags will deploy. In such cases, the seat belt will provide sufficient protection, and the supplemental protection offered by the airbag would be minimal.

Only the driver's airbag can deploy if there is no passenger in the front seat, or if the advanced airbag system has turned the passenger's airbag off (see page 33).

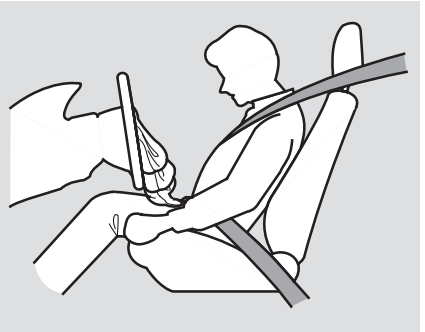

After inflating, the front airbags will immediately deflate, so they won't interfere with the driver's visibility, or the ability to steer or operate other controls.

The total time for inflation and deflation is one-tenth of a second, so fast that most occupants are not aware that the airbags deployed until they see them lying in their laps.

After a crash, you may see what looks like smoke. This is actually powder from the airbag's surface. Although the powder is not harmful, people with respiratory problems may experience some temporary discomfort. If this occurs, get out of the vehicle as soon as it is safe to do so.

Dual-Stage Airbags

Your front airbags are dual-stage airbags. This means they have two inflation stages that can be ignited sequentially or simultaneously, depending on crash severity.

In a ***more severe*** crash, both stages will ignite simultaneously to provide the quickest and greatest protection.

In a ***less severe*** crash, one stage will ignite first, then the second stage will ignite a split second later. This provides longer airbag inflation time with a little less force.

Dual-Threshold Airbags

Your front airbags are also dual-threshold airbags. Airbags with this feature have two deployment thresholds that depend on whether or not the occupant is wearing a seat belt.

If the occupant's belt is ***not latched***, the airbag will deploy at a slightly lower threshold, because the occupant would need extra protection.

If the occupant's belt ***is latched***, the airbag will inflate at a slightly higher threshold, when the airbag would be needed to supplement the protection provided by the seat belt.

Additional Information About Your Airbags

Advanced Airbags
Your front airbags are also advanced airbags. The main purpose of this feature is to help prevent airbag-caused injuries to short drivers and children who ride in front.

For both advanced airbags to work properly:

- Occupants must sit upright and wear their seat belts properly.
- Do not spill any liquids on or under the seats, cover the sensors, or put any cargo or metal objects under the front seats.
- Second-row passengers should not put their feet under the front seats.

Failure to follow these instructions could damage the sensors or prevent them from working properly.

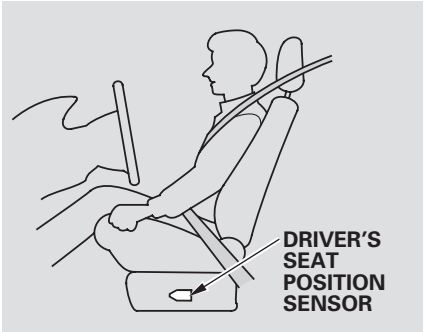

The driver's advanced front airbag system includes a seat position sensor under the seat. If the seat is too far forward, the airbag will inflate with less force, regardless of the severity of the impact.

If there is a problem with the sensor, the SRS indicator will come on, and the airbag will inflate in the normal manner regardless of the driver's seating position.

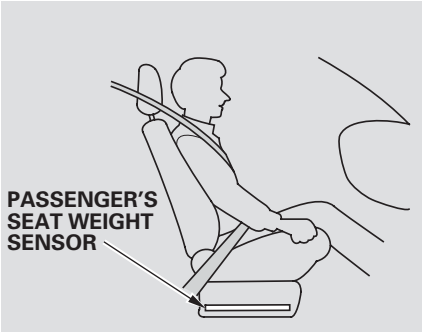

The passenger's advanced front airbag system has weight sensors under the seat. Although Acura does not encourage carrying an infant or small child in front, if the sensors detect the weight of an infant or small child, the system will automatically turn the passenger's front airbag off.

When the airbag is turned off, an indicator in the center of the dashboard will come on indicating passenger airbag "OFF" (see page 33).

If sensors detect there is no passenger in the front seat, the airbag will be off. However, the Passenger Airbag Off indicator will not come on.

To ensure that the passenger's advanced front airbag system will work properly, ***do not do anything that would increase or decrease the weight on the front passenger's seat.*** This includes:

- A second-row passenger pushing or pulling on the back of the front passenger's seat.
- Moving the front seat forcibly back against cargo on the seat or floor behind it.
- Hanging heavy items on the front passenger seat, or placing heavy items in the seat-back pocket.

How Your Side Airbags Work

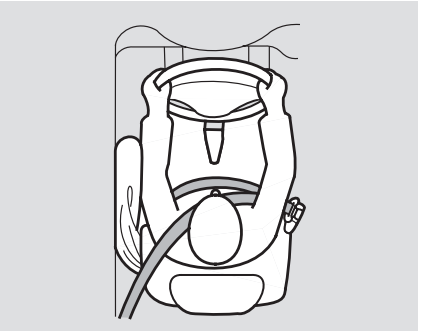

If you ever have a moderate to severe side impact, sensors will detect rapid deceleration and signal the control unit to instantly inflate either the driver's or the passenger's side airbag.

CONTINUED

Additional Information About Your Airbags

Only one airbag will deploy during a side impact. If the impact is on the passenger's side, the passenger's side airbag will deploy even if there is no passenger.

To get the best protection from the side airbags, front seat occupants should wear their seat belts and sit upright and well back in their seats.

Side Airbag Cutoff System

Your vehicle has a side airbag cutoff system designed primarily to protect a child riding in the front passenger's seat.

Although Acura does not encourage children to ride in front, if sensors detect a child has leaned into the side airbag's deployment path, the airbag will shut off.

The side airbag may also shut off if a short adult leans sideways, or a larger adult slouches and leans sideways into the airbag's deployment path.

Objects placed on the front passenger seat can also cause the side airbag to be shut off.

If the side airbag off indicator comes on (see page 32), have the passenger sit upright. Once the passenger is out of the airbag's deployment path, the system will turn the airbag back on, and the indicator will go out.

There will be some delay between the moment the passenger moves into or out of the airbag deployment path and when the indicator comes on or goes off.

A front seat passenger should not use a cushion or other object as a backrest. It may prevent the cutoff system from working properly.

How Your Side Curtain Airbags Work

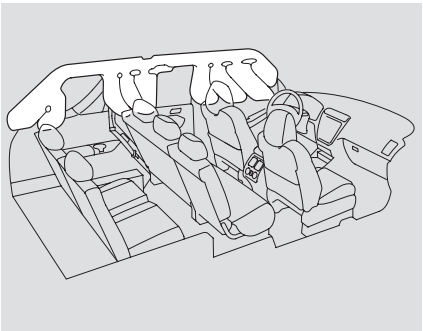

In a Side Impact
In a moderate to severe side impact, sensors will detect rapid deceleration and signal the control unit to instantly inflate the side curtain airbag on the driver's or the passenger's side of the vehicle.

If the impact is on the passenger's side, the passenger's side curtain airbag will inflate even if there are no occupants on that side of the vehicle.

In a Rollover
If the rollover sensor detects your vehicle is about to roll over, the control unit will instantly deploy both side curtain airbags and activate the front seat belt tensioners (see page 22).

In a rollover toward the passenger's side of the vehicle, both side curtain airbags will inflate and the front seat belt tensioners will activate even if there are no occupants on that side of the vehicle.

To get the best protection from the side curtain airbags, occupants should wear their seat belts and sit upright and well back in their seats.

Additional Information About Your Airbags

How the SRS Indicator Works

The SRS indicator alerts you to a potential problem with your airbags, sensors, or seat belt tensioners.

When you turn the ignition switch to the ON (II) position, this indicator comes on briefly then goes off. This tells you the system is working properly.
If the indicator comes on at any other time, or does not come on at all, you should have the system checked by your dealer. For example:

- If the SRS indicator does not come on after you turn the ignition switch to the ON (II) position.
- If the indicator stays on after the engine starts.
- If the indicator comes on or flashes on and off while you drive.

If you see any of these indications, the airbags and seat belt tensioners may not work properly when you need them.

⚠WARNING

Ignoring the SRS indicator can result in serious injury or death if the airbag systems or tensioners do not work properly.

Have your vehicle checked by a dealer as soon as possible if the SRS indicator alerts you to a possible problem.

How the Side Airbag Off Indicator Works

U.S.

Canada

This indicator alerts you that the passenger's side airbag has been automatically shut off. It does ***not*** mean there is a problem with your side airbags.

When you turn the ignition switch to the ON (II) position, the indicator should come on briefly and then go out (see page 60). If it doesn't come on, stays on, or comes on while driving without a passenger in the front seat, have the system checked.

How the Passenger Airbag Off Indicator Works

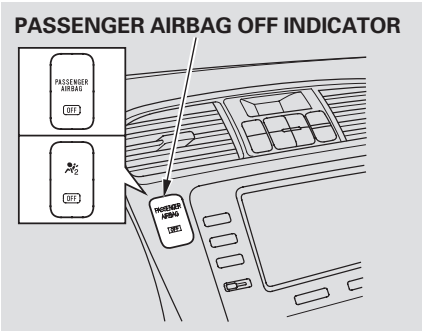

This indicator alerts you that the passenger's front airbag has been shut off because sensors detect the weight of an infant or small child on the front passenger's seat. It does **not mean** there is a problem with the airbag.

If no one is riding in the front seat, the airbag will be automatically shut off, but the indicator will not come on.

However, if the indicator comes on with no passenger in the front, or with an adult in the seat, there may be a problem with the advanced airbag system. Have the vehicle checked by the dealer as soon as possible.

The Passenger Airbag Off indicator may also come on and go off repeatedly if total weight on the seat is near the airbag cutoff threshold.

If this happens, have the passenger ride properly restrained in a back seat. If the passenger must ride in front, move the seat as far to the rear as possible, have the passenger sit upright, and wear the seat belt properly.

Airbag Service

Your airbag systems are virtually maintenance free, and there are no parts you can safely service. However, you must have your vehicle serviced if:

- ***An airbag ever inflates.*** Any airbag that has deployed must be replaced along with the control unit and other related parts. Any seat belt tensioner that activates must also be replaced.

  Do not try to remove or replace any airbag by yourself. This must be done by your dealer or a knowledgeable body shop.

- ***The SRS indicator alerts you to a problem.*** Take your vehicle to an authorized dealer as soon as possible. If you ignore this indication, your airbags may not operate properly.

Additional Information About Your Airbags

- ***If your vehicle has a moderate to severe impact.*** Even if your airbags do not inflate, your dealer should inspect the driver's seat position sensor and the front passenger's weight sensors to make sure they are operating properly.

Additional Safety Precautions

- ***Do not attempt to deactivate your airbags.*** Together, airbags and seat belts provide the best protection.

- ***Do not tamper with airbag components or wiring for any reason.*** Tampering could cause the airbags to deploy, possibly causing very serious injury.

- ***Do not expose the front seat-backs to liquid.*** If water or another liquid soaks into a seat-back, it can prevent the side airbag cutoff system from working properly.

- ***Do not remove or modify a front seat without consulting your dealer.*** This could make the driver's seat position sensor or the front passenger's weight sensors ineffective. If it is necessary to remove or modify a front seat to accommodate a person with disabilities, first contact Acura Client Services at 800-382-2238.

- ***Do not cover or replace front seat-back covers without consulting your dealer.*** Improperly replacing or covering front seat-back covers can prevent your side airbags from inflating during a side impact.

Protecting Children — General Guidelines

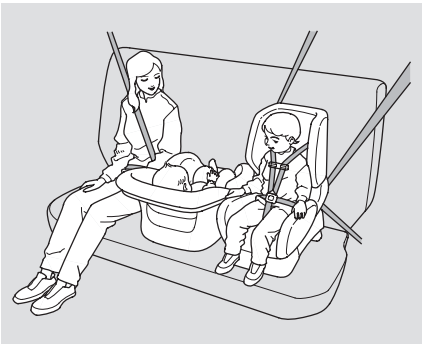

Children depend on adults to protect them. However, despite their best intentions many adults do not know how to properly protect child passengers.

If you have children, or ever need to drive with a child in your vehicle, be sure to read this section. It begins with important general guidelines, then presents special information for infants, small children, and larger children.

All Children Must Be Restrained
Each year, many children are injured or killed in vehicle crashes because they are either unrestrained or not properly restrained. In fact, vehicle accidents are the number one cause of the death of children ages 12 and under.

To reduce the number of child deaths and injuries, every state and Canadian province requires that infants and children be properly restrained when they ride in a vehicle.

Infants and small children must be restrained in an approved child seat that is properly secured to the vehicle (see pages 40 — 50).

⚠ WARNING

Children who are unrestrained or improperly restrained can be seriously injured or killed in a crash.

Any child too small for a seat belt should be properly restrained in a child seat. A larger child should be properly restrained with a seat belt and use a booster seat if necessary.

Larger children must be restrained with a lap/shoulder belt and ride on a booster seat until the seat belt fits them properly (see pages 50 — 53).

Protecting Children – General Guidelines

All Children Should Sit in a Back Seat
According to accident statistics, children of all ages and sizes are safer when they are restrained in a back seat.

The National Highway Traffic Safety Administration and Transport Canada recommend that all children age 12 and under be properly restrained in a back seat. Some states have laws restricting where children may ride.

Children who ride in back are less likely to be injured by striking interior vehicle parts during a collision or hard braking. Also, children cannot be injured by an inflating front airbag when they ride in the back.

The Passenger's Front Airbag Can Pose Serious Risks
Front airbags have been designed to help protect adults in a moderate to severe frontal collision. To do this, the passenger's front airbag is quite large, and it can inflate with enough force to cause very serious injuries.

Even though your vehicle has an advanced front airbag system, which can automatically turn the passenger's front airbag off (see page 33), please follow the guidelines below.

Infants
Never put a rear-facing child seat in the front seat of a vehicle equipped with a passenger's front airbag. If the airbag inflates, it can hit the back of the child seat with enough force to kill or very seriously injure an infant.

Small Children
Placing a forward-facing child seat in the front seat of a vehicle equipped with a passenger's front airbag can be hazardous. If the vehicle seat is too far forward, or the child's head is thrown forward during a collision, an inflating front airbag can strike the child with enough force to kill or very seriously injure a small child.

Larger Children
Children who have outgrown child seats are also at risk of being injured or killed by an inflating passenger's front airbag. Whenever possible, larger children should sit in the back seat, on a booster seat if needed, and be properly restrained with a seat belt. (See page 50 for important information about protecting larger children.)

To remind you of the passenger's front airbag hazards, and that children must be properly restrained in a back seat, your vehicle has warning labels on the dashboard (on U.S. models, the dashboard label is removed by the owner) and on the front visors. Please read and follow the instructions on these labels.

U.S. Models

Canadian Models

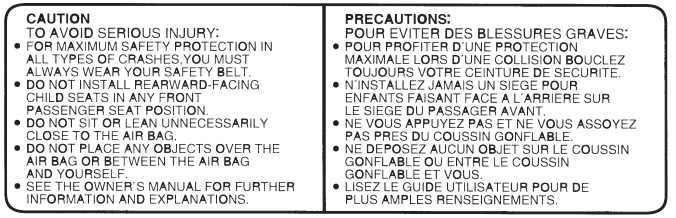

CAUTION
TO AVOID SERIOUS INJURY:
- FOR MAXIMUM SAFETY PROTECTION IN ALL TYPES OF CRASHES,YOU MUST ALWAYS WEAR YOUR SAFETY BELT.
- DO NOT INSTALL REARWARD-FACING CHILD SEATS IN ANY FRONT PASSENGER SEAT POSITION.
- DO NOT SIT OR LEAN UNNECESSARILY CLOSE TO THE AIR BAG.
- DO NOT PLACE ANY OBJECTS OVER THE AIR BAG OR BETWEEN THE AIR BAG AND YOURSELF.
- SEE THE OWNER'S MANUAL FOR FURTHER INFORMATION AND EXPLANATIONS.

PRECAUTIONS:
POUR EVITER DES BLESSURES GRAVES:
- POUR PROFITER D'UNE PROTECTION MAXIMALE LORS D'UNE COLLISION BOUCLEZ TOUJOURS VOTRE CEINTURE DE SECURITE.
- N'INSTALLEZ JAMAIS UN SIEGE POUR ENFANTS FAISANT FACE A L'ARRIERE SUR LE SIEGE DU PASSAGER AVANT.
- NE VOUS APPUYEZ PAS ET NE VOUS ASSOYEZ PAS PRES DU COUSSIN GONFLABLE.
- NE DEPOSEZ AUCUN OBJET SUR LE COUSSIN GONFLABLE OU ENTRE LE COUSSIN GONFLABLE ET VOUS.
- LISEZ LE GUIDE UTILISATEUR POUR DE PLUS AMPLES RENSEIGNEMENTS.

Protecting Children — General Guidelines

If You Must Drive with Several Children

Your vehicle has two rows of back seats where children can be properly restrained. If you ever have to carry a group of children, and a child must ride in front:

- Place the largest child in the front seat, provided the child is large enough to wear the lap/shoulder belt properly (see page 51).
- Move the vehicle seat as far to the rear as possible (see page 13).
- Have the child sit upright and well back in the seat (see page 18).
- Make sure the seat belt is properly positioned and secured (see page 16).

If a Child Requires Close Attention

Many parents say they prefer to put an infant or small child in the front passenger seat so they can watch the child, or because the child requires attention.

Placing a child in the front seat exposes the child to hazards in a frontal collision, and paying close attention to a child distracts the driver from the important tasks of driving, placing both of you at risk.

If a child requires close physical attention or frequent visual contact, we strongly recommend that another adult ride with the child in a back seat. The back seat is far safer for a child than the front.

Additional Safety Precautions

- ***Never hold an infant or child on your lap.*** If you are not wearing a seat belt in a crash, you could be thrown forward and crush the child against the dashboard or a seat-back. If you are wearing a seat belt, the child can be torn from your arms and be seriously hurt or killed.
- ***Never put a seat belt over yourself and a child.*** During a crash, the belt could press deep into the child and cause serious or fatal injuries.
- ***Use childproof door locks to prevent children from opening the doors.*** This can prevent children from accidentally falling out (see page 82).

- ***Never let two children use the same seat belt.*** If they do, they could be very seriously injured in a crash.

- ***Do not leave children alone in a vehicle.*** Leaving children without adult supervision is illegal in most states and Canadian provinces, and can be very hazardous.

  For example, infants and small children left in a vehicle on a hot day can die from heatstroke. A child left alone with the key in the ignition switch can accidentally set the vehicle in motion, possibly injuring themselves or others.

- ***Lock all doors and tailgate when your vehicle is not in use.*** Children who play in vehicles can accidentally get trapped inside. Teach your children not to play in or around vehicles.

- ***Keep vehicle keys and remote transmitters out of the reach of children.*** Even very young children learn how to unlock vehicle doors, turn on the ignition switch, and open the tailgate, which can lead to accidental injury or death.

Protecting Infants and Small Children

Protecting Infants

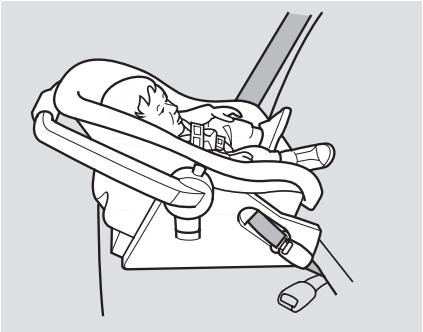

Child Seat Type
An infant must be properly restrained in a rear-facing, reclining child seat until the child reaches the seat maker's weight or height limit for the seat and the child is at least one year old.

Only a rear-facing child seat provides proper support for a baby's head, neck, and back.

Two types of seats may be used: a seat designed exclusively for infants, or a convertible seat used in the rear-facing, reclining mode.

Do not put a rear-facing child seat in a forward-facing position. If placed facing forward, an infant could be very seriously injured during a frontal collision.

Child Seat Placement
A rear-facing child seat can be placed in any seating position in the second or third row, but not in the front. Never put a rear-facing child seat in the front seat.

If the passenger's front airbag inflates, it can hit the back of the child seat with enough force to kill or seriously injure an infant.

When properly installed in the second row, a rear-facing child seat may prevent the driver or a front passenger from moving their seat as far back as recommended, or from locking their seat-back in the desired position.

It could also interfere with proper operation of the passenger's advanced front airbag system.

In any of these situations, we strongly recommend that you install the child seat directly behind the front passenger's seat, move the seat as far forward as needed, and leave it unoccupied. Or, you may wish to get a smaller rear-facing child seat.

⚠WARNING

Placing a rear-facing child seat in the front seat can result in serious injury or death during a collision.

Always place a rear-facing child seat in the back seat, not the front.

Protecting Small Children

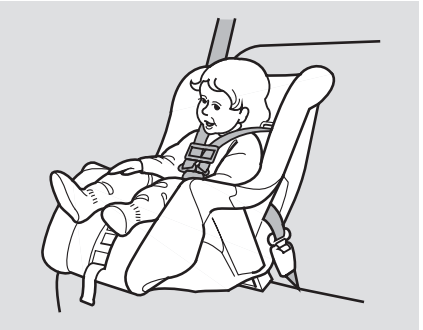

Child Seat Type

A child who is at least 1 year old, and who fits within the child seat maker's weight and height limits, should be restrained in a forward-facing, upright child seat.

Of the different seats available, we recommend those that have a five-point harness system as shown.

We also recommend that a small child use the child seat as long as possible, until the child reaches the weight or height limit for the seat.

CONTINUED

Protecting Infants and Small Children

Child Seat Placement
We strongly recommend placing a forward-facing child seat in a back seat, not the front.

Even with advanced front airbags, which can automatically turn the passenger's front airbag off (see page 33), a back seat is the safest place for a small child.

Placing a forward-facing child seat in the front seat of a vehicle equipped with a passenger's airbag can be hazardous. If the vehicle seat is too far forward, or the child's head is thrown forward during a collision, an inflating airbag can strike the child with enough force to cause very serious or fatal injuries.

If it is necessary to put a forward-facing child seat in the front, move the vehicle seat as far to the rear as possible, be sure the child seat is firmly secured to the vehicle and the child is properly strapped in the seat.

⚠ WARNING

Placing a forward-facing child seat in the front seat can result in serious injury or death if the front airbag inflates.

If you must place a forward-facing child seat in front, move the vehicle seat as far back as possible, and properly restrain the child.

Selecting a Child Seat

When buying a child seat, you need to choose either a conventional child seat, or one designed for use with the lower anchors and tethers for children (LATCH) system.

Conventional child seats must be secured to a vehicle with a seat belt, whereas LATCH-compatible seats are secured by attaching the seat to hardware built into the two second-row seats.

Since LATCH-compatible child seats are easier to install and reduce the possibility of improper installation, we recommend selecting this style.

We also recommend selecting a LATCH-compatible seat with a rigid, rather than a flexible, anchor (see page 45).

In seating positions and vehicles not equipped with LATCH, a LATCH-compatible child seat can be installed using a seat belt.

Whatever type of seat you choose, to provide proper protection, a child seat should meet three requirements:

1. ***The child seat should meet U.S. or Canadian Motor Vehicle Safety Standard 213.*** Look for FMVSS 213 or CMVSS 213 on the box.

2. ***The child seat should be of the proper type and size to fit the child.*** Rear-facing for infants, forward-facing for small children.

3. ***The child seat should fit the vehicle seating position (or positions) where it will be used.***

Before purchasing a conventional child seat, or using a previously purchased one, we recommend that you test the seat in the specific vehicle seating position or positions where the seat will be used.

Installing a Child Seat

After selecting a proper child seat and a good place to install the seat, there are three main steps in installing the seat:

1. ***Properly secure the child seat to the vehicle.*** All child seats must be secured to the vehicle with the lap part of a lap/shoulder belt or with the LATCH (lower anchors and tethers for children) system. A child whose seat is not properly secured to the vehicle can be endangered in a crash.

2. ***Make sure the child seat is firmly secured.*** After installing a child seat, push and pull the seat forward and from side-to-side to verify that it is secure.

A child seat secured with a seat belt should be installed as firmly as possible. However, it does not need to be "rock solid." Some side-to-side movement can be expected and should not reduce the child seat's effectiveness.

If the child seat is not secure, try installing it in a different seating position, or use a different style of child seat that can be firmly secured.

3. ***Secure the child in the back seat.*** Make sure the child is properly strapped in the child seat according to the child seat maker's instructions. A child who is not properly secured in a child seat can be seriously injured in a crash.

The following pages provide guidelines on how to properly install a child seat. A forward-facing child seat is used in all examples, but the instructions are the same for a rear-facing child seat.

Installing a Child Seat with LATCH

Your vehicle is equipped with LATCH (Lower Anchors and Tethers for Children) at the outer second row seats.

The lower anchors are located between the seat-back and seat bottom, and are to be used only with a child seat designed for use with LATCH.

The location of each lower anchor is indicated by a small button above the anchor point.

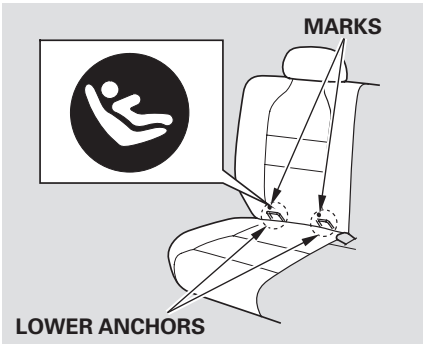

To install a LATCH-compatible child seat:

1. Move the seat belt buckle or tongue away from the lower anchors.

2. Make sure there are no objects near the anchors that could prevent a secure connection between the child seat and the anchors.

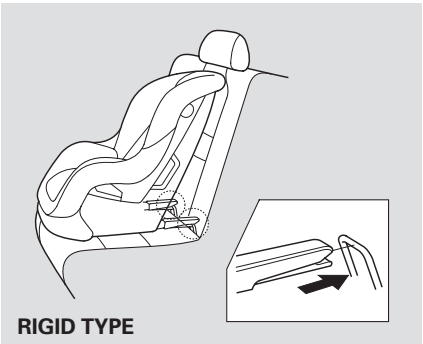

3. Place the child seat on the vehicle seat, then attach the seat to the lower anchors according to the child seat maker's instructions.

   Some LATCH-compatible seats have a rigid-type connector as shown above.

CONTINUED

Installing a Child Seat

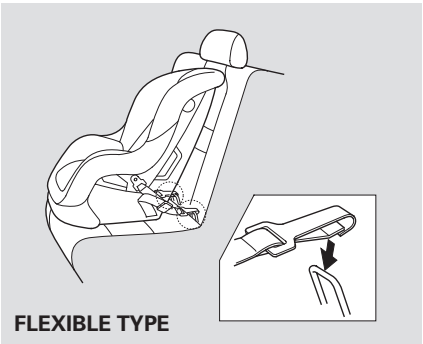

Other LATCH-compatible seats have a flexible-type connector as shown above.

4. Whatever type you have, follow the child seat maker's instructions for adjusting or tightening the fit.

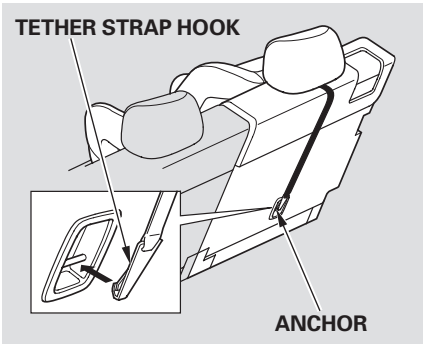

5. Lift the head restraint (see page 88), then route the tether strap through the legs of the head restraint and over the seat-back, making sure the strap is not twisted.

6. Attach the tether strap hook to the tether anchor, then tighten the strap as instructed by the child seat maker.

7. Push and pull the child seat forward and from side to side to verify that it is secure.

Installing a Child Seat with a Lap/ Shoulder Belt

When not using the LATCH system, all child seats must be secured to the vehicle with the lap part of a lap/ shoulder belt.

In addition, the lap/shoulder belts in all seating positions except the driver's have a locking mechanism that must be activated to secure a child seat.

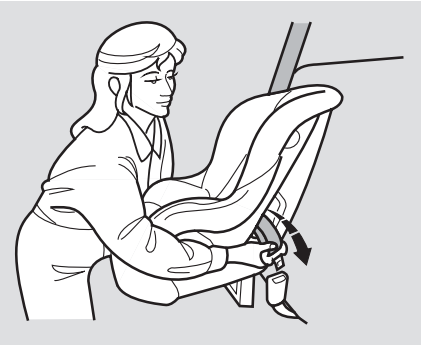

1. With the child seat in the desired seating position, route the belt through the child seat according to the seat maker's instructions, then insert the latch plate into the buckle.

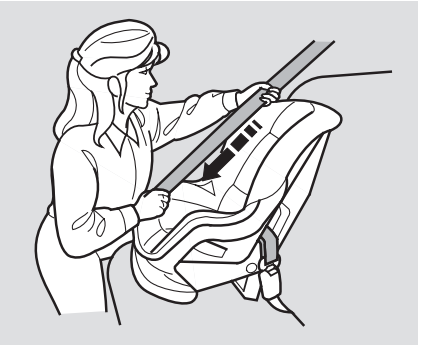

2. To activate the lockable retractor, slowly pull the shoulder part of the belt all the way out until it stops, then let the belt feed back into the retractor.

3. After the belt has retracted, tug on it. If the belt is locked, you will not be able to pull it out. If you can pull the belt out, it is not locked, and you will need to repeat these steps.

CONTINUED

Installing a Child Seat

4. After confirming that the belt is locked, grab the shoulder part of the belt near the buckle, and pull up to remove any slack from the lap part of the belt. Remember, if the lap part of the belt is not tight, the child seat will not be secure.

   To remove slack, it may help to put weight on the child seat, or push on the back of the seat while pulling up on the belt.

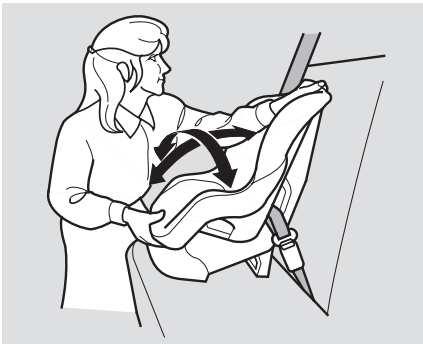

5. Push and pull the child seat forward and from side-to-side to verify that it is secure enough to stay upright during normal driving maneuvers. If the child seat is not secure, unlatch the belt, allow it to retract fully, then repeat these steps.

To deactivate the locking mechanism and remove a child seat, unlatch the buckle, unroute the seat belt, and let the belt fully retract.

Installing a Child Seat with a Tether

A child seat with a tether can be installed in any seating position in the second or third row.

Since a tether can provide additional security to the lap/shoulder belt installation, we recommend using a tether whenever one is required or available.

Second Row Installation

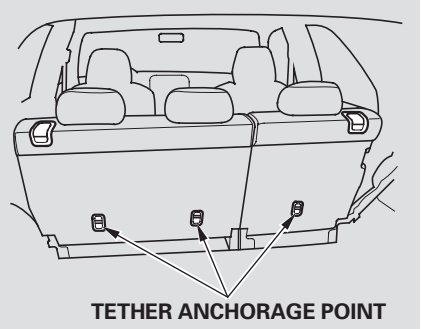

Each second row seat has a tether anchorage point behind the seat-back.

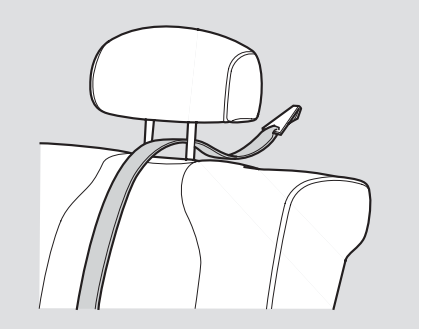

1. After properly securing the child seat in the desired position (see page 47), lift the head restraint, then route the tether strap over the seat-back.

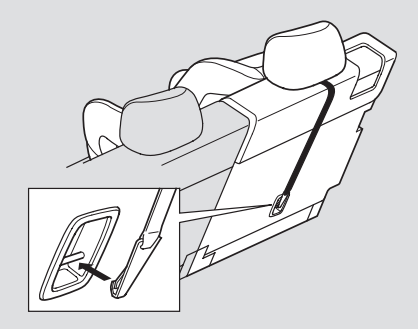

2. Attach the tether strap hook to the anchor, making sure the strap is not twisted.

3. Tighten the strap according to the seat maker's instructions.

CONTINUED

Installing a Child Seat, Protecting Larger Children

Third Row Installation

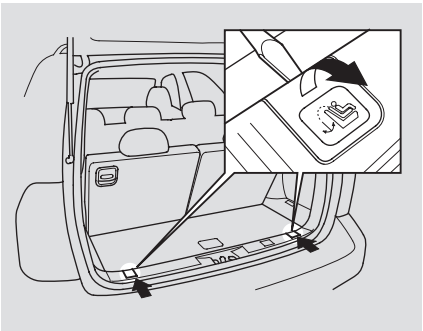

Each third row seat has a tether anchorage point on the tailgate sill.

1. Select the anchor point you want to use. Lift the cargo area floor, then remove the anchor cover with a small flat-tipped screwdriver.

2. Follow steps 1 through 2 of the second row installation.

Protecting Larger Children

When a child reaches the recommended weight or height limit for a forward-facing child seat, the child should sit in a back seat on a booster seat and wear a lap/shoulder belt.

The following pages give instructions on how to check proper seat belt fit, what kind of booster seat to use if one is needed, and important precautions for a child who must sit in front.

⚠ WARNING

Allowing a child age 12 or under to sit in front can result in injury or death if the passenger's front airbag inflates.

If a child must ride in front, move the vehicle seat as far back as possible, use a booster seat if needed, have the child sit up properly and wear the seat belt properly.

Checking Seat Belt Fit

To determine if a lap/shoulder belt properly fits a child, have the child put on the seat belt, then ask yourself:

1. Does the child sit all the way back against the seat?

2. Do the child's knees bend comfortably over the edge of the seat?

3. Does the shoulder belt cross between the child's neck and arm?

4. Is the lap part of the belt as low as possible, touching the child's thighs?

5. Will the child be able to stay seated like this for the whole trip?

If you answer yes to all these questions, the child is ready to wear the lap/shoulder belt correctly. If you answer no to any question, the child needs to ride on a booster seat.

Using a Booster Seat

A child who has outgrown a forward-facing child seat should ride in a back seat and use a booster seat until the lap/shoulder belt fits them properly without the booster.

CONTINUED

Protecting Larger Children

Some states also require children to use a booster seat until they reach a given age or weight (e.g., 6 years or 60 lbs). Be sure to check current laws in the state or states where you intend to drive.

Booster seats can be high-back or low-back. Whichever style you select, make sure the booster seat meets federal safety standards and that you follow the booster seat maker's instructions.

If a child who uses a booster seat must ride in front, move the vehicle seat as far back as possible and be sure the child is wearing the seat belt properly.

A child may continue using a booster seat until the tops of their ears are even with the top of the vehicle's or booster's seat-back. A child of this height should be tall enough to use the lap/shoulder belt without a booster seat.

When Can a Larger Child Sit in Front

The National Highway Traffic Safety Administration and Transport Canada recommend that all children age 12 and under be properly restrained in a back seat.

If the passenger's front airbag inflates in a moderate to severe frontal collision, the airbag can cause serious injuries to a child who is unrestrained, improperly restrained, sitting too close to the airbag, or out of position.

A side airbag also poses risks. If any part of a larger child's body is in the path of a deploying side airbag, the child could receive possibly serious injuries.

Of course, children vary widely. And while age may be one indicator of when a child can safely ride in front, there are other important factors you should consider.

Physical Size
Physically, a child must be large enough for the lap/shoulder belt to properly fit (see page 51). If the seat belt does not fit properly, with or without the child sitting on a booster, the child should not sit in front.

Maturity
To safely ride in front, a child must be able to follow the rules, including sitting properly, and wearing the seat belt properly throughout a ride.

If you decide that a child can safely ride up front, be sure to:

- Carefully read the owner's manual, and make sure you understand all seat belt instructions and all safety information.
- Move the vehicle seat to the rear-most position.
- Have the child sit up straight, back against the seat, and feet on or near the floor.
- Check that the child's seat belt is properly and securely positioned.
- Supervise the child. Even mature children sometimes need to be reminded to fasten the seat belts or sit properly.

Additional Safety Precautions
Do not let a child wear a seat belt across the neck. This could result in serious neck injuries during a crash.

Do not let a child put the shoulder part of a seat belt behind the back or under the arm. This could cause very serious injuries during a crash. It also increases the chance that the child will slide under the belt in a crash and be injured.

Two children should never use the same seat belt. If they do, they could be very seriously injured in a crash.

Do not put any accessories on a seat belt. Devices intended to improve a child's comfort or reposition the shoulder part of a seat belt can make the belt less effective and increase the chance of serious injury in a crash.

Carbon Monoxide Hazard

Your vehicle's exhaust contains carbon monoxide gas. You should have no problem with carbon monoxide entering the vehicle in normal driving if you maintain your vehicle properly.

Have the exhaust system inspected for leaks whenever:

- The vehicle is raised for an oil change.
- You notice a change in the sound of the exhaust.
- The vehicle was in an accident that may have damaged the underside.

⚠WARNING

Carbon monoxide gas is toxic. Breathing it can cause unconsciousness and even kill you.

Avoid any enclosed areas or activities that expose you to carbon monoxide.

High levels of carbon monoxide can collect rapidly in enclosed areas, such as a garage. Do not run the engine with the garage door closed. Even with the door open, run the engine only long enough to move the vehicle out of the garage.

With the tailgate open, air flow can pull exhaust gas into your vehicle's interior and create a hazardous condition. If you must drive with the tailgate open, open all the windows and set the heating and cooling system/climate control system as shown below.

If you must sit in your parked vehicle with the engine running, even in an unconfined area, adjust the heating and cooling system/climate control system as follows:

1. Select the fresh air mode.
2. Select the mode.
3. Turn the fan on high speed.
4. Set the temperature control to a comfortable setting.

These labels are in the locations shown. They warn you of potential hazards that could cause serious injury. Read these labels carefully.

If a label comes off or becomes hard to read (except for the U.S. dashboard label which is removed by the owner), contact your Acura dealer for a replacement.

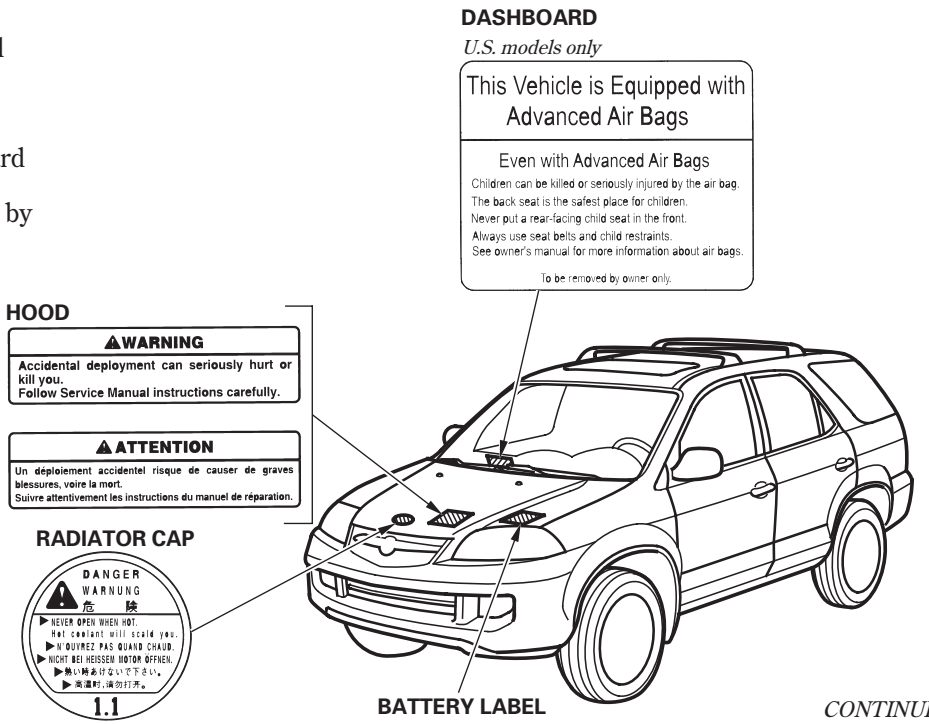

CONTINUED

Safety Labels

SUN VISOR

U.S. models

⚠ WARNING

EVEN WITH ADVANCED AIR BAGS

- Children can be killed or seriously injured by the air bag
- The back seat is the safest place for children
- Never put a rear-facing child seat in the front
- Always use seat belts and child restraints
- See owner's manual for more information about air bags

Canadian models

CAUTION	PRÉCAUTION:
TO AVOID SERIOUS INJURY: • FOR MAXIMUM SAFETY PROTECTION IN ALL TYPES OF CRASHES, YOU MUST ALWAYS WEAR YOUR SAFETY BELT. • DO NOT INSTALL REARWARD-FACING CHILD SEATS IN ANY FRONT PASSENGER SEAT POSITION. • DO NOT SIT OR LEAN UNNECESSARILY CLOSE TO THE AIR BAG. • DO NOT PLACE ANY OBJECTS OVER THE AIR BAG OR BETWEEN THE AIR BAG AND YOURSELF. • SEE THE OWNER'S MANUAL FOR FURTHER INFORMATION AND EXPLANATIONS.	POUR ÉVITER DES BLESSURES GRAVES: • POUR PROFITER D'UNE PROTECTION MAXIMALE LORS D'UNE COLLISION BOUCLEZ TOUJOURS VOTRE CEINTURE DE SÉCURITÉ. • N'INSTALLEZ JAMAIS UN SIÈGE POUR ENFANTS FAISANT FACE À L'ARRIÈRE SUR LE SIÈGE DU PASSAGER AVANT. • NE VOUS APPUYEZ PAS ET NE VOUS ASSEYEZ PAS PRÈS DU COUSSIN GONFLABLE. • NE DÉPOSEZ AUCUN OBJET SUR LE COUSSIN GONFLABLE OU ENTRE LE COUSSIN GONFLABLE ET VOUS. • LISEZ LE GUIDE UTILISATEUR POUR DE PLUS AMPLES RENSEIGNEMENTS.

⚠ WARNING: HIGHER ROLLOVER RISK

Avoid Abrupt Maneuvers and Excessive Speed.

Always Buckle Up.

See Owner's Manual For Further Information.

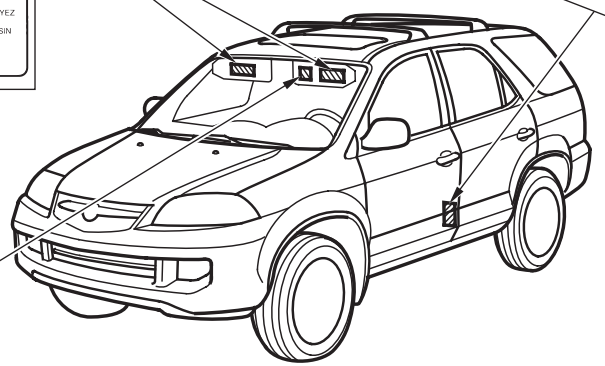

DOORJAMBS

On vehicles with side curtain airbags

U.S. models

SIDE AIRBAG

- This car is equipped with side airbags in the front seats and side curtain airbags.
- Do not lean against the door.
- See owner's manual for more information.

Canadian models

SIDE AIRBAG

- This car is equipped with side airbags in the front seats and side curtain airbags.
- Do not lean against the door.
- See owner's manual for more information.

COUSSIN GONFLABLE LATERAL

- Cette automobile est équipée de coussins gonflables latéraux dans les sièges avant ainsi que de coussins gonflables latéraux de type rideau.
- Ne vous appuyez pas sur la porte.
- Consultez le Manuel du propriétaire pour en savoir plus.

Instruments and Controls

This section gives information about the controls and displays that contribute to the daily operation of your vehicle. All the essential controls are within easy reach.

Control Locations 58
Instrument Panel 59
Instrument Panel Indicators..... 60
Gauges 68
Controls Near the Steering Wheel 70
Windshield Wipers and Washers 71
Rear Window Wiper and Washer..... 73
Turn Signal and Headlights..... 74
Instrument Panel Brightness 76
Hazard Warning Button..... 76
Rear Window Defogger 77
Fog Light 77
Steering Wheel Adjustment 78
Keys..... 79
Immobilizer System..... 80
Ignition Switch 81
Door Locks 82
Remote Transmitter..... 83
Seats 86
Seat Heaters 91
Power Windows 92
Moonroof 93
Parking Brake 94
Mirrors..... 95
Driving Position Memory System..... 97
Interior Lights..... 99
Interior Convenience Items..... 101
Beverage Holders..... 102
Console Compartment 102
Glove Box 102
Rear Compartment..... 103
Cargo Hooks 103
Sun Visor 103
Vanity Mirror 103
Accessory Power Sockets..... 104

Control Locations

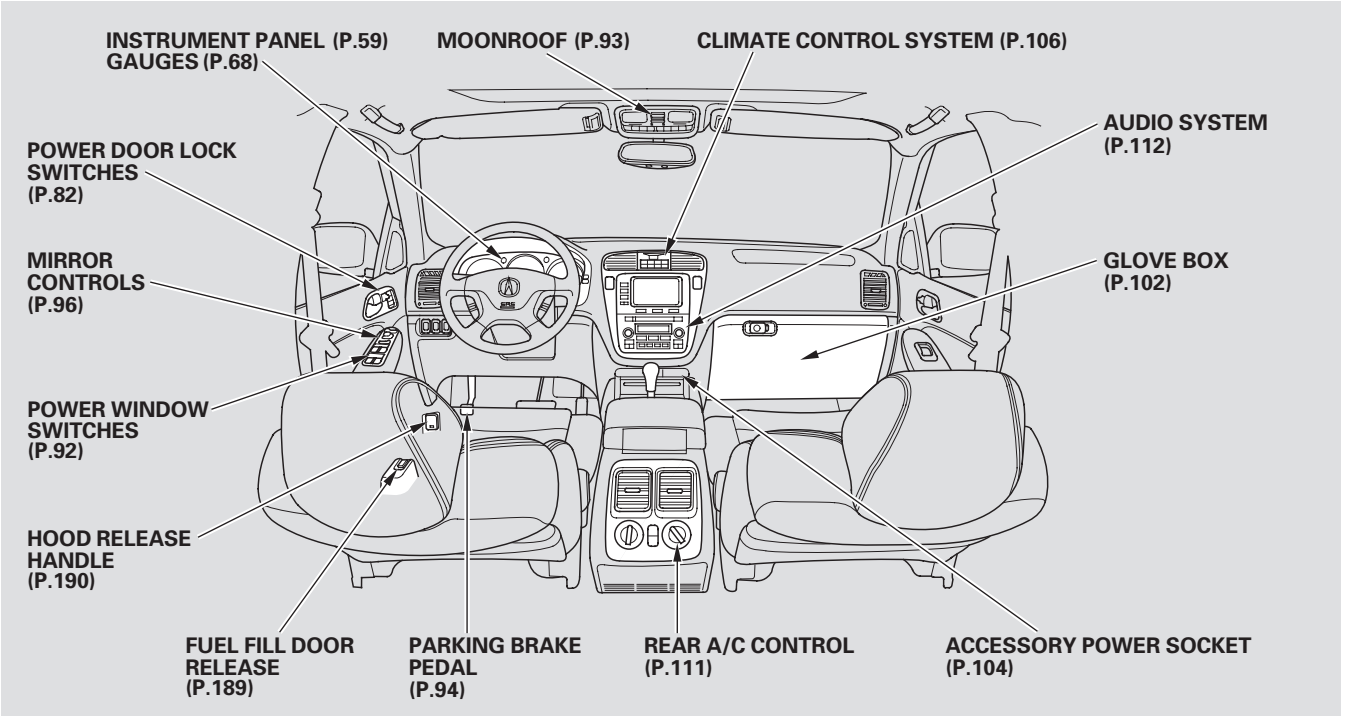

Instrument Panel

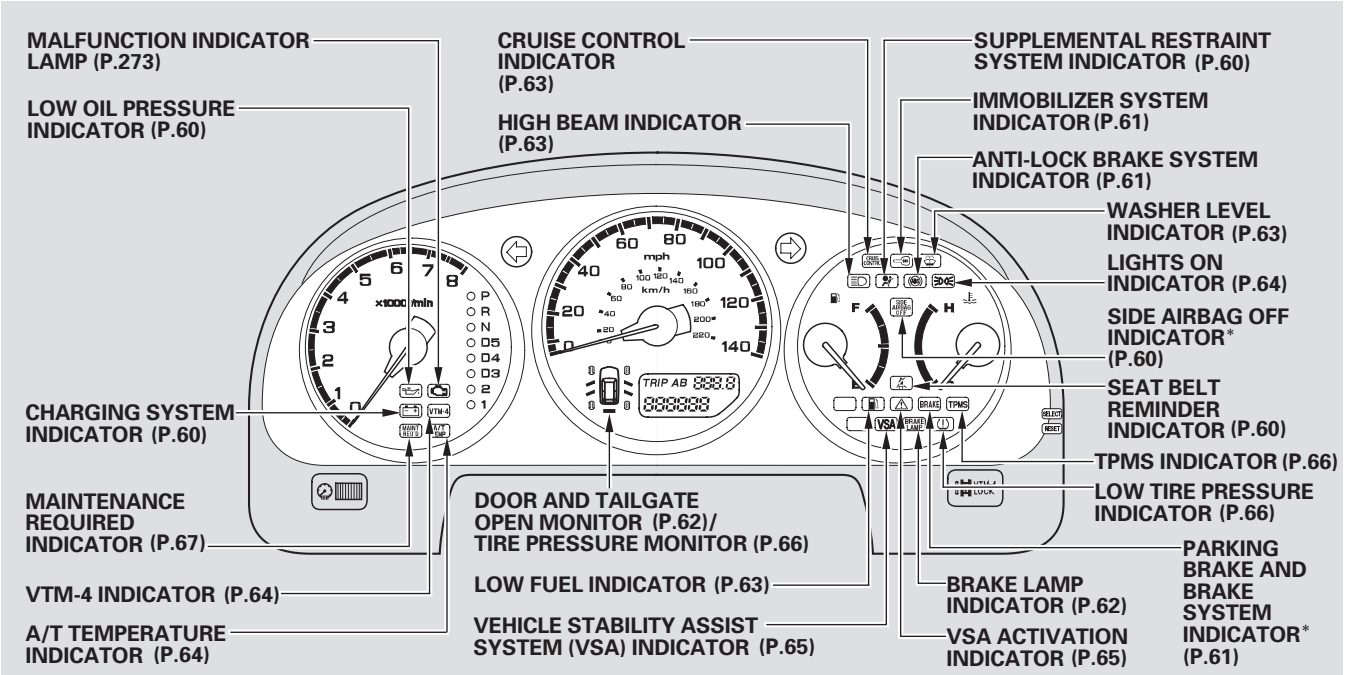

* The U.S. instrument panel is shown. Differences for the Canadian models are noted in the text.

CONTINUED

Instrument Panel Indicators

The instrument panel has many indicators to give you important information about your vehicle.

Seat Belt Reminder Indicator

This indicator comes on when you turn the ignition switch to the ON (II) position. It reminds you and your passengers to fasten your seat belts. A beeper also sounds if you have not fastened your seat belt.

If you turn the ignition switch to the ON (II) position before fastening your belt, the beeper sounds and the indicator flashes. If you do not fasten your seat belt before the beeper stops, the indicator stops flashing but remains on.

If you continue driving without fastening your seat belt, the beeper sounds and the indicator flashes again at regular intervals.

Malfunction Indicator Lamp

See page 273 .

Low Oil Pressure Indicator

The engine can be severely damaged if this indicator flashes or stays on when the engine is running. For more information, see page 272 .

Charging System Indicator

If this indicator comes on when the engine is running, the battery is not being charged. For more information, see page 272 .

Supplemental Restraint System Indicator

This indicator comes on for a few seconds when you turn the ignition switch to the ON (II) position, see page 32 for more information. If it comes on at any other time, it indicates a potential problem with your front airbags or automatic seat belt tensioners. This indicator will also alert you to a potential problem with your side airbags, passenger's side airbag automatic cutoff system, driver's seat position sensor, front passenger's weight sensors, or side curtain airbags. For complete information, see page 32 .

U.S. Canada

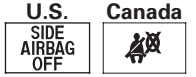

Side Airbag Off Indicator

This indicator comes on for a few seconds when you turn the ignition switch to the ON (II) position. If it comes on at any other time, it indicates that the passenger's side airbag has automatically shut off. For more information, see page 32 .

U.S. Canada

BRAKE

Parking Brake and Brake System Indicator

This indicator has two functions:

1. This indicator comes on when you turn the ignition switch to the ON (II) position. It is a reminder to check the parking brake. A beeper sounds if you try to drive with the parking brake not fully released. Driving with the parking brake not fully released can damage the brakes and tires.

2. If the indicator remains on after you have fully released the parking brake while the engine is running, or if it comes on while driving, it can indicate a problem in the brake system. For complete information, see page 274 .

Anti-lock Brake System (ABS) Indicator

This indicator normally comes on for a few seconds when you turn the ignition switch to the ON (II) position, and when the ignition switch is turned to the START (III) position. If it comes on at any other time, there is a problem with the ABS. If this happens, have your vehicle checked at a dealer. With the indicator on, your vehicle still has normal braking ability but no anti-lock brakes. For more information, see page 211 .

Immobilizer System Indicator

This indicator comes on for a few seconds when you turn the ignition switch to the ON (II) position. It will go off if you have inserted a properly-coded ignition key. If it is not a properly-coded key, the indicator will blink and the engine will not start (see page 80).

This indicator also blinks several times when you turn the ignition switch from the ON (II) position to the ACCESSORY (I) or the LOCK (0) position.

Instrument Panel Indicators

Turn Signal and Hazard Warning Indicators

The left or right turn signal indicator blinks when you signal a lane change or turn. If the indicator does not blink or blinks rapidly, it usually means one of the turn signal bulbs is burned out (see page 246). Replace the bulb as soon as possible, since other drivers cannot see that you are signaling.

When you press the Hazard Warning button, both turn signal lights blink. All turn signals on the outside of the vehicle should flash.

Brake Lamp Indicator

If a brake light does not work, the **BRAKE LAMP** indicator comes on when you push the brake pedal with the ignition switch in the ON (II) position.

A burned out brake light is a hazard when drivers behind you cannot tell you are braking. Replace the bulb as soon as possible (see page 247).

Door and Tailgate Open Monitor

The appropriate indicator comes on in this display if the tailgate or any door is not closed tightly.

All of the indicators in the monitor display come on for a few seconds when you turn the ignition switch to the ON (II) position.

"Daytime Running Lights" Indicator

Canadian models only

This indicator comes on when you turn the ignition switch to the ON (II) position with the headlight switch off and the parking brake set. It should go off if you turn on the headlights or release the parking brake. If it comes on at any other time, it means there is a problem with the DRL. There may also be a problem with the high beam headlights.

Cruise Control Indicator

This indicator comes on when you set the cruise control. See page 146 for information on operating the cruise control.

High Beam Indicator

This indicator comes on with the high beam headlights. See page 74 for information on the headlight controls.

On Canadian models, this indicator comes on with reduced brightness when the daytime running lights (DRL) are on (see page 76).

Low Fuel Indicator

This indicator comes on as a reminder that you must refuel soon.

Washer Level Indicator

This indicator comes on when the washer fluid level is low. Add washer fluid when you see this indicator comes on (see page 241).

Instrument Panel Indicators

Lights On Indicator
U.S. models only

This indicator reminds you that the exterior lights are on. It comes on when the light switch is in either the or position. This indicator will also come on when the light switch is in AUTO and the lights turn on automatically.

U.S. Models except Touring

If you turn the ignition switch to the ACCESSORY (I) or LOCK (0) position without turning off the light switch, this indicator will remain on. A reminder chime will also sound when you open the driver's door.

A/T Temperature Indicator

A/T TEMP

This indicator monitors the temperature of the automatic transmission fluid. It should come on for a few seconds when you turn the ignition switch to the ON (II) position. If it comes on while driving, it means the transmission fluid temperature is too high. Pull to the side of the road when it is safe, shift to Park, and let the engine idle until the indicator goes out.

NOTICE

Continuing to drive with the A/T temperature indicator on may cause serious damage to the transmission.

VTM-4 Indicator

VTM-4

This indicator normally comes on for a few seconds when you turn the ignition switch to the ON (II) position. If it comes on at any other time, there is a problem in the 4WD system. Take the vehicle to your dealer to have it checked.

If the indicator blinks while driving, the VTM-4 fluid temperature is too high. Pull to the side of the road when it is safe, shift to Park, and let the engine idle until the indicator goes out.

NOTICE

Continuing to drive with the VTM-4 indicator blinking may cause serious damage to the system.

VSA Vehicle Stability Assist (VSA) System Indicator

This indicator normally comes on for a few seconds when you turn the ignition switch to the ON (II) position.

If it comes on and stays on at any other time, or if it does not come on when you turn the ignition switch to the ON (II) position, there is a problem with the VSA system. Take your vehicle to a dealer to have it checked. Without VSA, your vehicle still has normal driving ability, but will not have VSA traction and stability enhancement. See page 213 for more information on the VSA system.

VSA Activation Indicator

This indicator normally comes on for a few seconds when you turn the ignition switch to the ON (II) position. For more information, see page 213 .

This indicator has three functions:

1. It comes on as a reminder that you have turned off the vehicle stability assist (VSA) system.
2. It flashes when VSA is active (see page 213).
3. It comes on along with the VSA system indicator if there is a problem with the VSA system.

Instrument Panel Indicators

Low Tire Pressure Indicator

This indicator normally comes on for a few seconds when you turn the ignition to the ON (II) position.
If it comes on while driving, it indicates that one or more of your vehicle's tires are extremely low on pressure.
If this happens, pull to the side of the road when it is safe, check which tire has lost the pressure on the Tire Pressure Monitor, and determine the cause. If it is because of a flat tire, replace the flat tire with the compact spare (see page 261), and have the flat tire repaired as soon as possible.
If two or more tires are underinflated, call a professional towing service (see page 275). Refer to page 207 for more information.

Tire Pressure Monitor

This monitor normally comes on for a few seconds when you turn the ignition switch to the ON (II) position. While driving, the appropriate tire indicator will come on along with the low tire pressure indicator if a tire is extremely underinflated or has suddenly lost pressure. See **Low Tire Pressure Indicator** for what to do if this indicator comes on.

Tire Pressure Monitoring System (TPMS) Indicator

This indicator normally comes on for a few seconds when you turn the ignition switch to the ON (II) position.

If this indicator comes on and stays on at any other time, or if it does not come on when you turn the ignition switch to the ON (II) position, there is a problem with the TPMS. With this indicator on, the low tire pressure indicator and the tire pressure monitor will not come on when a tire loses pressure. Take the vehicle to your dealer to have the system checked.

MAINT REQ'D

Maintenance Required Indicator

This indicator reminds you that it is time to take your vehicle in for scheduled maintenance.
Refer to the maintenance schedule for normal and severe driving conditions on pages 231 and 232 .

For the first 6,000 miles (9,600 km) after the Maintenance Required Indicator is reset, it will come on for 2 seconds when you turn the ignition switch to the ON (II) position.

Between 6,000 miles (9,600 km) and 7,500 miles (12,000 km), this indicator will come on for 2 seconds when you first turn the ignition switch to ON (II), and then flash for 10 seconds.

If you exceed 7,500 miles (12,000 km) without having the scheduled maintenance performed, this indicator will remain on as a constant reminder.

Your dealer will reset this indicator after completing the scheduled maintenance. If this maintenance is done by someone other than your Acura dealer, reset the indicator as follows.

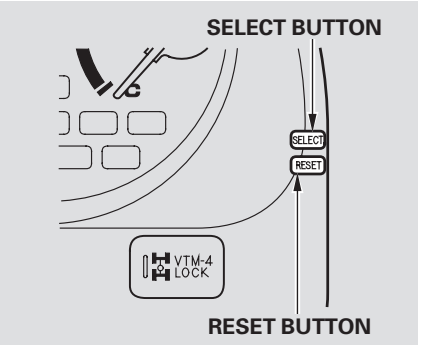

1. Turn off the engine.
2. Press and hold the Select and Reset buttons on the instrument panel, then turn the ignition switch to the ON (II) position.
3. Hold the buttons for approximately 10 seconds until the indicator goes off.

Gauges

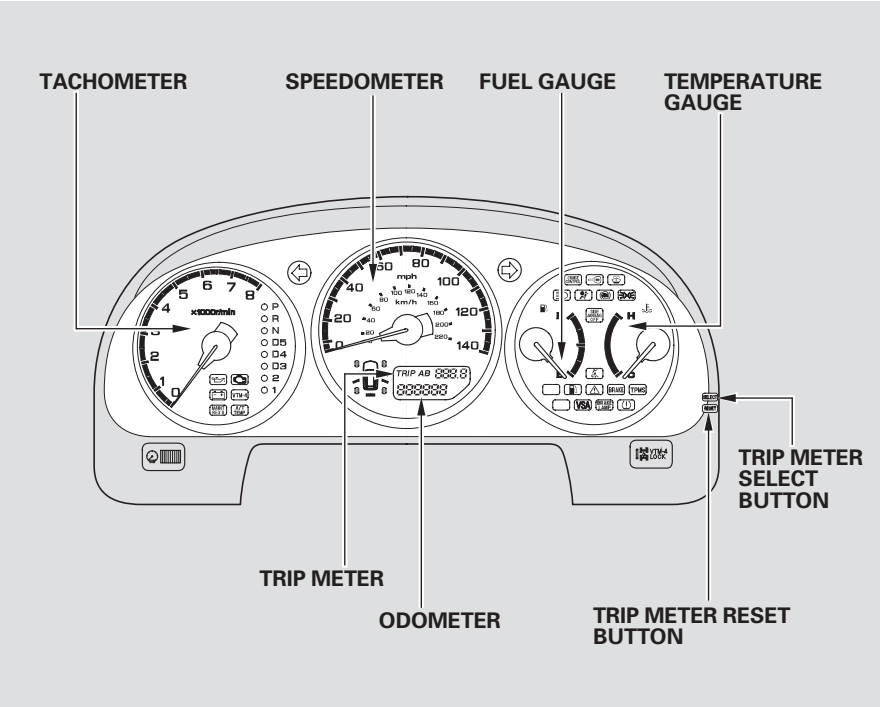

Odometer
This shows the total distance your vehicle has been driven. It measures miles in U.S. models and kilometers in Canadian models.
It is illegal under U.S. federal law and Canadian provincial regulations to disconnect, reset, or alter the odometer with the intent to change the number of miles or kilometers indicated.

Fuel Gauge
This shows how much fuel you have. It may show slightly more or less than the actual amount. The needle returns to the bottom after you turn off the ignition.

NOTICE

Avoid driving with an extremely low fuel level. Running out of fuel could cause the engine to misfire, damaging the catalytic converter.

Trip Meter

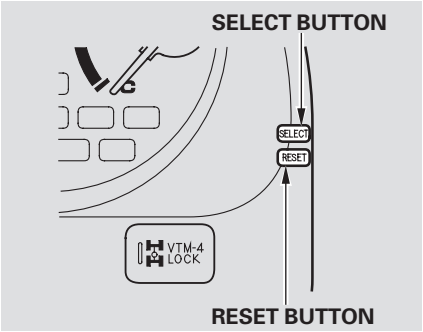

This meter shows the number of miles (U.S.) or kilometers (Canada) driven since you last reset it.

There are two trip meters: Trip A and Trip B. Switch between these displays by pressing the Select button repeatedly. Each trip meter works independently, so you can keep track of two different distances. When you turn the ignition switch to the ON (II) position, what you last selected is displayed.

To reset a trip meter, display it, and then press and hold the Reset button until the number resets to “0.0”. Both trip meters will reset if the vehicle’s battery goes dead or is disconnected.

Temperature Gauge

This shows the temperature of the engine’s coolant. During normal operation, the pointer should rise to about the middle of the gauge. In severe driving conditions, the pointer may rise to the upper white mark. If it reaches the red (Hot) mark, pull safely to the side of the road. Turn to page 270 for instructions and precautions on checking the engine’s cooling system.

Controls Near the Steering Wheel

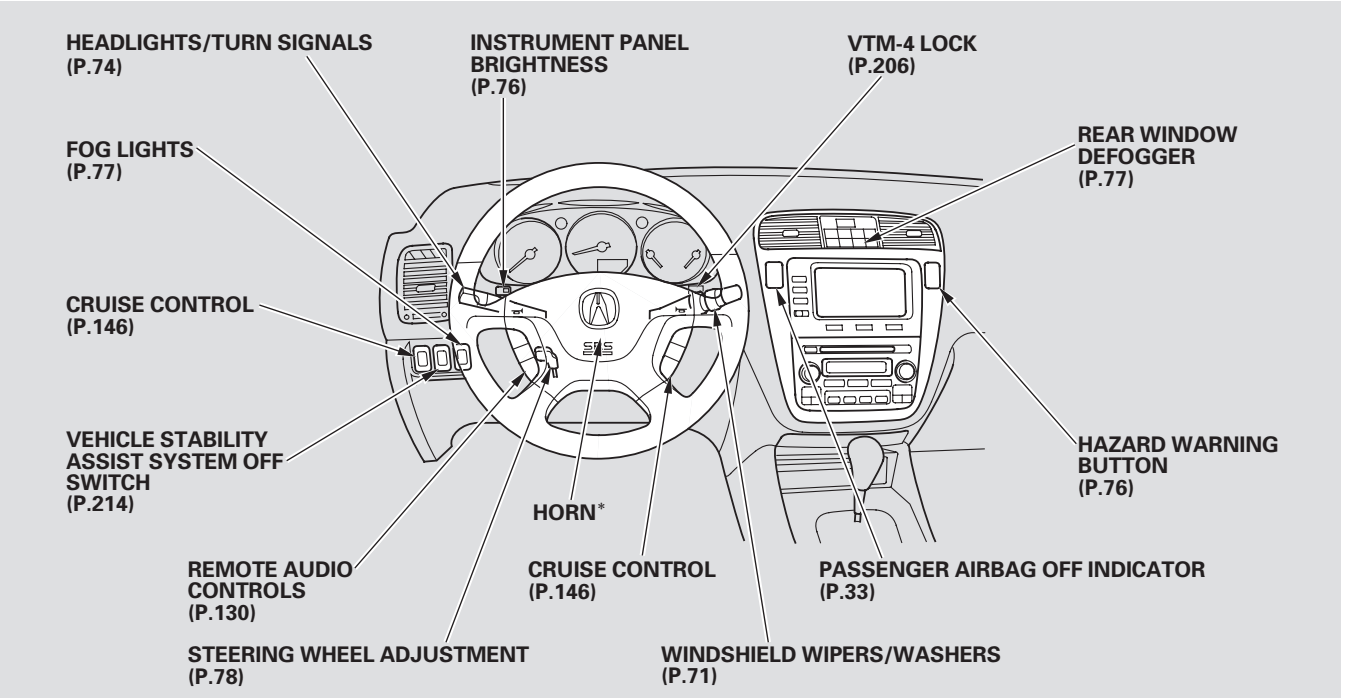

* To use the horn, press the pad around the “Acura” logo.

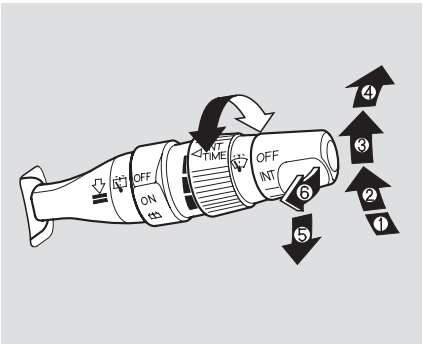

1. OFF
2. INT : Intermittent
3. — : Low speed
4. ═ : High speed
5. MIST
6. Windshield Washers

Turn the rotary switch at the end of the lever or push down or pull the lever to select a position.

OFF: The wipers are not activated.

Except Touring Model

INT: The length of the wiper interval is varied automatically according to the vehicle's speed.

Vary the delay by turning the INT TIME ring. If you turn it to the shortest delay, the wipers change to low speed when the vehicle speed exceeds 12 mph (20 km/h).

— : The wipers run at low speed.

═ : The wipers run at high speed.

MIST: The wipers run at high speed until you release the lever.

Windshield Washer: Pull the wiper control lever toward you and hold it. The washers spray until you release the lever. The wipers run at low speed, then complete one more sweep after you release the lever.

Windshield Wipers and Washers

Automatic Intermittent Wipers
Touring Model

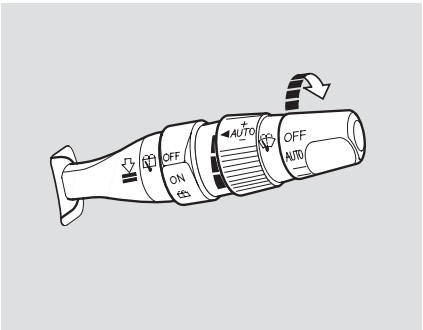

The automatic intermittent wiper system senses rainfall and automatically turns on the windshield wipers. To enable sensing, turn the rotary switch at the end of the wiper lever to AUTO.

When the system senses rainfall, it turns on the windshield wipers and varies their speed (intermittent, low speed, or high speed) depending on how hard it is raining.

When the rotary switch is in the — (low speed) or ═ (high speed) position, the windshield wipers run at that speed. Automatic sensing is disabled.

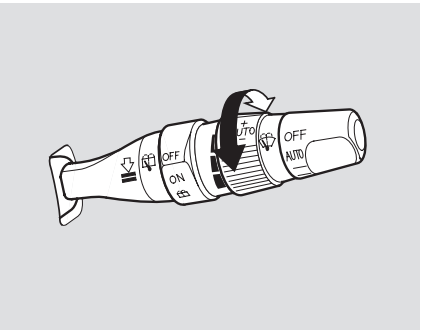

You can adjust the sensitivity of the system by turning the AUTO SENS ring next to the rotary switch.

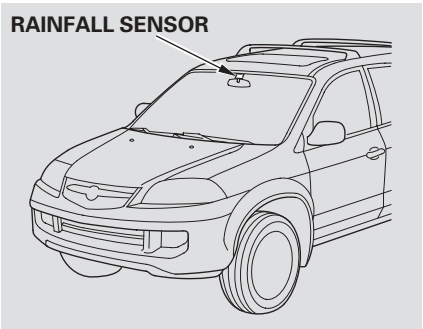

The rainfall sensor is located in the windshield near the rearview mirror. If the sensor is covered with mud, oil, dust, etc., the wipers may not operate properly or may operate unexpectedly.

NOTICE

Do not put the wiper switch in AUTO when driving through a car wash; this will prevent the wipers from operating unexpectedly. Turn off this system when not in use.

Rear Window Wiper and Washer

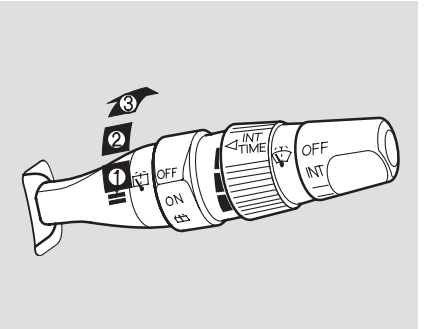

The rear window wiper switch is located next to the windshield wiper switch.

1. OFF
2. ON (The wipers will sweep twice, then run intermittently.)
3. Turn and hold to use the wiper and washer.

Turn Signal, Headlights

Turn Signal and Headlights

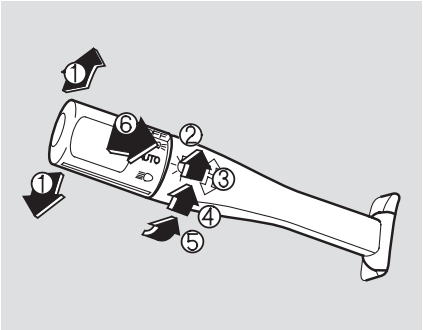

1. Turn signal
2. Off
3. Parking lights
4. AUTO
5. Headlights on
6. High beams, flash high beams

Turn Signal — Push down on the lever to signal a left turn and up to signal a right turn. To signal a lane change, push lightly on the lever, and hold it. The lever will return to center when you release it or complete a turn.

Headlights — Turning the switch to the " " position turns on the parking lights, taillights, instrument panel lights, side-marker lights, and rear license plate lights.

Turning the switch to the " " position turns on the headlights. If you leave the lights on with the key removed from the ignition switch, you will hear a reminder chime when you open the driver's door.

When the light switch is in either of these positions, the Lights On indicator comes on as a reminder. This indicator stays on if you leave the lights on and turn the ignition switch to the ACCESSORY (I) or LOCK (0) position.

High Beams — To turn on, pull the lever back until you hear a click. The blue high beam indicator will come on (see page 63). Pull it back again to return to low beams.

To flash the high beams, pull the lever back lightly, then release it. The high beams will stay on as long as you hold the lever back.

AUTO — The Automatic Lighting feature turns on the headlights, all other exterior lights, and the instrument panel lights when it senses low ambient light.

To turn on automatic lighting, turn the light switch to AUTO at any time. The lights will come on automatically when the outside light level becomes low (at dusk, for example). The lights on indicator comes on as a reminder. The lights and indicator will turn off automatically when the system senses high ambient light.

The lights will remain on when you turn off the ignition switch. They will turn off automatically when you open the driver's door. To turn them on again, either turn the ignition switch to the ON (II) position or turn the light switch to ≡D .

Even with the automatic lighting feature turned on, we recommend that you turn on the lights manually when driving at night or in a dense fog, or when you enter dark areas such as long tunnels or parking structures.

Do not leave the light switch in AUTO if you will not be driving the vehicle for an extended period (a week or more). You should also turn off the lights if you plan to leave the engine idling or the engine off for a long time.

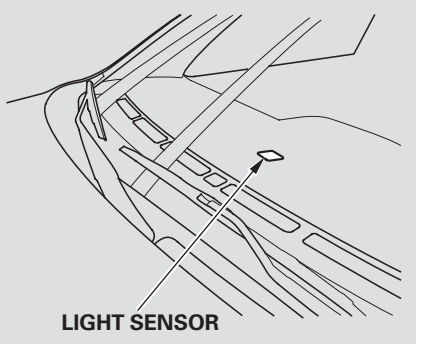

The automatic lighting feature is controlled by a sensor located on top of the dashboard. Do not cover this sensor or spill liquids on it.

Headlights, Instrument Panel Brightness, Hazard Warning Button

Daytime Running Lights

Canadian Models

With the headlight switch off, the high beam headlights come on with reduced brightness when you turn the ignition switch to the ON (II) position and release the parking brake. They remain on until you turn the ignition switch off, even if you set the parking brake.

The headlights revert to normal operation when you turn them on with the switch.

Instrument Panel Brightness

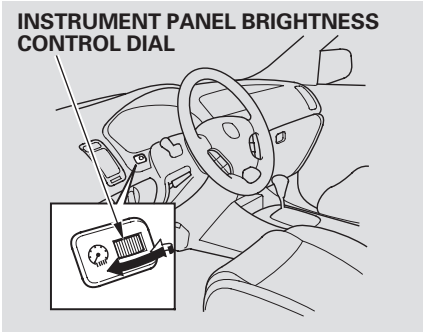

The dial on the instrument panel controls the brightness of the instrument panel lights, the blue lighting in the upper console and the front foot wells. Turn the dial all the way to the right, past the click, to increase the brightness of the instrument panel lights to their brightest setting.

Hazard Warning Button

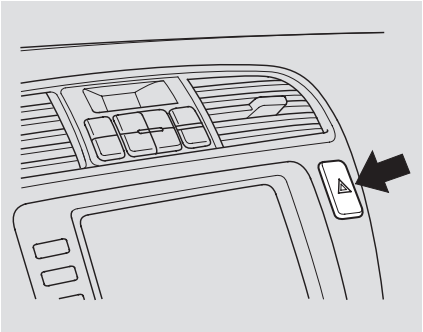

Push the red triangle to the right of the display to turn on the hazard warning lights (four-way flashers). This causes all four outside turn signals and both indicators in the instrument panel to flash. Use the hazard warning lights if you need to park in a dangerous area near heavy traffic, or if your vehicle is disabled.

Rear Window Defogger

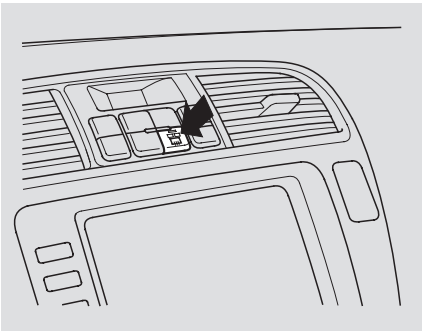

The rear window defogger will clear fog, frost, and thin ice from the window. Push the defogger button to turn it on and off. The indicator in the button lights to show the defogger is on. If you do not turn it off, the defogger will shut itself off after about 15 minutes. It also shuts off when you turn off the ignition. You have to turn it on again when you restart the vehicle.

Make sure the rear window is clear and you have good visibility before starting to drive.

The defogger wires on the inside of the rear window can be accidentally damaged. When cleaning the glass, always wipe side to side.

Fog Lights

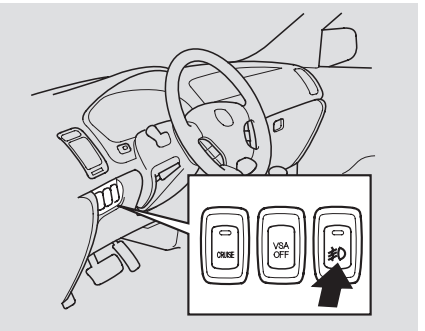

Turn the fog lights on and off by pressing the button. The indicator in the button lights to show the fog lights are on.

You can use the fog lights only when the headlights are on low beam. They will go off when you turn the headlights off or onto high beam.

Steering Wheel Adjustment

Make any steering wheel adjustment before you start driving.

⚠ WARNING

Adjusting the steering wheel position while driving may cause you to lose control of the vehicle and be seriously injured in a crash.

Adjust the steering wheel only when the vehicle is stopped.

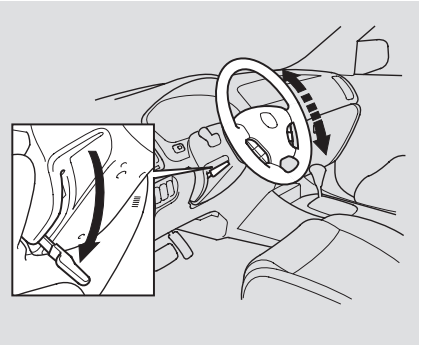

1. Push the lever under the steering column all the way down.
2. Move the steering wheel so it points toward your chest, not toward your face. Make sure you can see the instrument panel gauges and indicators.
3. Push the lever up to lock the steering wheel in position.
4. Make sure you have securely locked the steering wheel in place by trying to move it up and down.

Keys

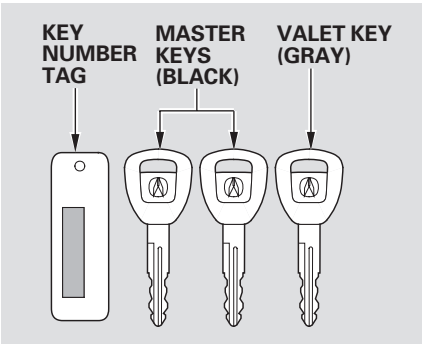

The master key fits all the locks on your vehicle. The valet key works only in the ignition and the door locks. You can keep the glove box locked when you leave your vehicle and the valet key at a parking facility.

You should have received a key number tag with your keys. You will need this key number if you ever have to get a lost key replaced. Use only Acura-approved key blanks.

These keys contain electronic circuits that are activated by the immobilizer system. They will not work to start the engine if the circuits are damaged.

- Protect the keys from direct sunlight, high temperature, and high humidity.
- Do not drop the keys or set heavy objects on them.
- Keep the keys away from liquids. If they get wet, dry them immediately with a soft cloth.

The keys do not contain batteries. Do not try to take them apart.

Immobilizer System

The immobilizer system protects your vehicle from theft. If an improperly-coded key (or other device) is used, the engine will not start.

When you turn the ignition switch to the ON (II) position, the immobilizer system indicator should come on for a few seconds, then go out. If the indicator starts to blink, it means the system does not recognize the coding of the key. Turn the ignition switch to the LOCK (0) position, remove the key, reinsert it, and turn the ignition switch to the ON (II) position again.

The system may not recognize your key's coding if another immobilizer key or other metal object (i.e. key fob) is near the ignition switch when you insert the key.

If the system repeatedly does not recognize the coding of your key, contact your dealer.

Do not attempt to alter this system or add other devices to it. Electrical problems could result that may make your vehicle undrivable.

If you have lost your key and you cannot start the engine, contact your dealer.

As required by the FCC:
This device complies with Part 15 of the FCC rules. Operation is subject to the following two conditions: (1) This device may not cause harmful interference, and (2) this device must accept any interference received, including interference that may cause undesired operation.

Changes or modifications not expressly approved by the party responsible for compliance could void the user's authority to operate the equipment.

This device complies with Industry Canada Standard RSS-210.
Operation is subject to the following two conditions: (1) this device may not cause interference, and (2) this device must accept any interference that may cause undesired operation of the device.

Ignition Switch

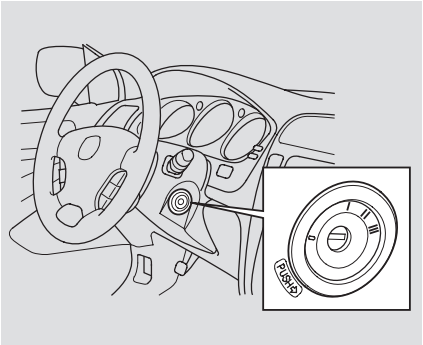

The ignition switch has four positions: LOCK (0), ACCESSORY (I), ON (II), and START (III).

LOCK (0) — You can insert or remove the key only in this position. To turn the key to the LOCK (0) position, the shift lever must be in Park, and you must push the key in slightly.

If the front wheels are turned, the anti-theft lock may make it difficult to turn the key. Firmly turn the steering wheel to the left or right as you turn the key.

ACCESSORY (I) — You can operate the audio system and the accessory power sockets in this position.

ON (II) — This is the normal key position when driving. Several of the indicators on the instrument panel come on as a test when you turn the ignition switch from the ACCESSORY (I) to the ON (II) position.

START (III) — Use this position only to start the engine. The switch returns to the ON (II) position when you let go of the key.

You will hear a reminder beeper if you leave the key in the ignition switch in the LOCK (0) or the ACCESSORY (I) position and open the driver's door. Remove the key to turn off the beeper.

The shift lever must be in Park before you can remove the key from the ignition switch.

Door Locks

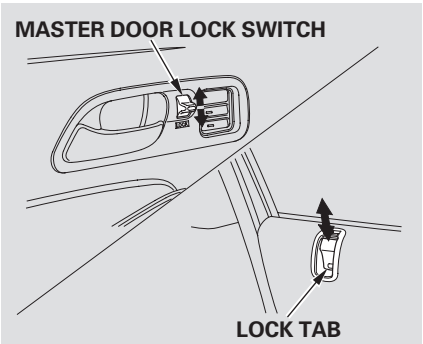

To lock all doors and the tailgate, press the master door lock switch on either front door, press the lock tab down on the driver's door, or use the key on the outside lock on the driver's door.

Pressing up on either master door lock switch will unlock all of the doors and the tailgate.

The lock tab on any door locks and unlocks that door. To unlock the driver's door from the outside, turn the key and release it. If you turn and hold it, all doors and the tailgate unlock.

Lockout Prevention
With the driver's door open and the key in the ignition, both master door lock switches are disabled. They are not disabled if the driver's door is closed. Pushing the switch down on the open passenger's door will lock all doors and the tailgate.

Tailgate
To open the tailgate, pull the handle, then lift up. To close the tailgate, use the inner handle to pull it down, then press down on the back edge.

Keep the tailgate closed at all times while driving to avoid damaging the tailgate and to prevent exhaust gas from getting into the interior. See **Carbon Monoxide Hazard** on page 54.

Childproof Door Locks

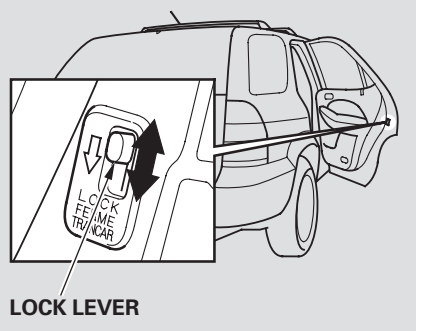

The childproof door locks are designed to prevent children seated in the rear from accidentally opening the rear doors. Each rear door has a lock lever near the edge. With the lever in the LOCK position, the door cannot be opened from the inside regardless of the position of the lock tab. To open the door, pull the lock tab up, and use the outside door handle.

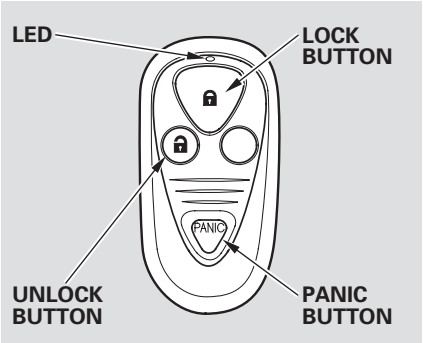

LOCK — Press this button once to lock all doors and the tailgate. Some exterior lights will flash. When you push LOCK twice within 5 seconds, you will hear a beep to verify that the doors and tailgate are locked and the security system has set. This button does not work if any door or tailgate is not fully closed.

UNLOCK — Press this button once to unlock the driver's door. Push it twice to unlock the other doors. Some exterior lights will flash twice when you push the button. If you do not open any door or the tailgate within 30 seconds, they will automatically relock.

When you press the UNLOCK button, the front and rear individual map lights and the cargo area light, depending on their switch positions, will come on (see page 99). If you do not open any door or the tailgate, the lights stay on for about 30 seconds, then go out. If you relock the doors and the tailgate with the remote transmitter before 30 seconds have elapsed, the lights will go off immediately.

PANIC — Press and hold this button for about 1 second to attract attention; the horn will sound and the exterior lights will flash for about 30 seconds. To cancel panic mode, press any other button on the remote transmitter, or turn the ignition switch to the ON (II) position. Panic mode does not work when the key is in the ignition switch.

Remote Transmitter Care

- Avoid dropping or throwing the transmitter.
- Protect the transmitter from extreme temperature.
- Do not immerse the transmitter in any liquid.
- If you lose a transmitter, the replacement needs to be reprogrammed by your dealer.

Remote Transmitter

Replacing the Transmitter Battery

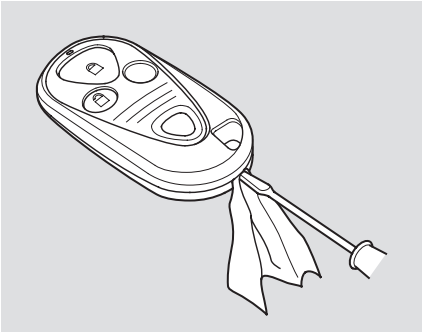

If it takes several pushes on the button to lock or unlock the doors and the tailgate, replace the battery as soon as possible.
Battery type: CR2025

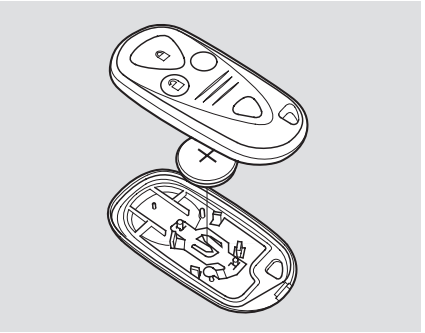

To replace the battery, place a cloth on the edge of the transmitter and remove the upper half by carefully prying on the edge with a small flat-tip screwdriver. Remove the old battery and insert a new battery with the + side facing up. Snap the two halves of the transmitter case back together.

As required by the FCC:
This device complies with Part 15 of the FCC rules. Operation is subject to the following two conditions: (1) This device may not cause harmful interference, and (2) this device must accept any interference received, including interference that may cause undesired operation.

Changes or modifications not expressly approved by the party responsible for compliance could void the user's authority to operate the equipment.

This device complies with Industry Canada Standard RSS-210.
Operation is subject to the following two conditions: (1) this device may not cause interference, and (2) this device must accept any interference that may cause undesired operation of the device.

Recalling a Memorized Driving Position
On Touring Models

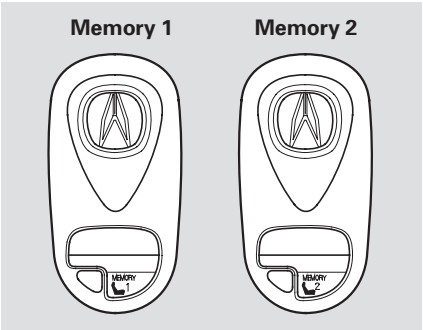

Each remote transmitter will also activate the Driving Position Memory System (see page 97). When you unlock and open the driver's door with the remote transmitter, you will hear a beep. The driver's seat, except power lumbar, and outside mirrors move to the positions stored in that memory location. You will hear two beeps when the movement is complete.

If the seat and mirrors are already in the proper positions, you will hear three beeps when you open the door.

The driving position memory activated (Memory 1, Memory 2) is shown on the back of each transmitter. Make sure you store your desired driving position in the memory that is activated by the transmitter you normally carry.

You can turn the driving position memory activation off and on. To turn it off, press and hold the LOCK and UNLOCK buttons at the same time for about one second. The LED in the remote transmitter will blink twice. Then release the buttons.

To turn it back on, repeat this procedure. The LED will come on for one second to indicate the feature has been turned on.

Seats

Front Seat Power Adjustments

See pages 13 — 14 for important safety information and warnings about how to properly position seats and seat-backs.

The controls for the power adjustable front seats are on the outside edge of each seat bottom. You can adjust the seats with the ignition switch in any position. Make all seat adjustments before you start driving.

On the Touring Package, the passenger seat has the same adjustments as the driver's seat but without any lumbar adjustment.

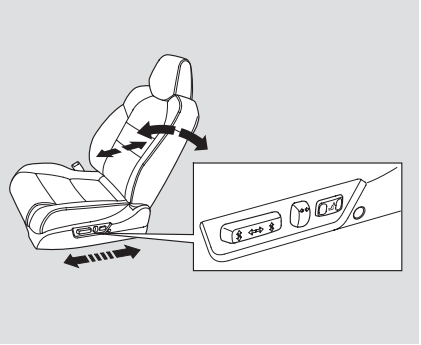

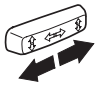

Moves the seat forward and backward.

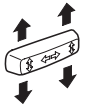

Moves the front of the seat up or down and the rear of the seat up or down.

Raises or lowers the seat.

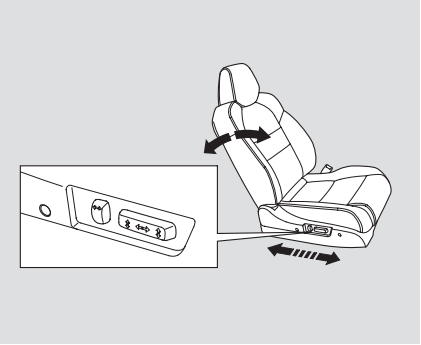

Adjusts the seat-back angle forward or backward.

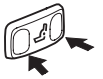

Increases or decreases the lumbar support. (Driver's Touring seat only)

Passenger Manual Seat Adjustments

Without Touring Package

See pages 13 – 14 for important safety information and warnings about how to properly position seats and seat-backs.

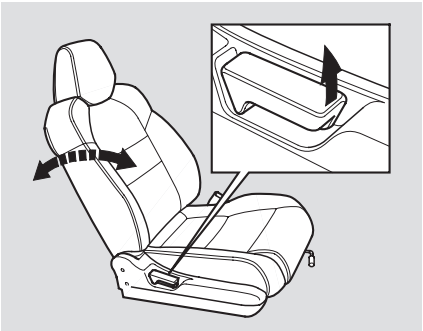

Make all seat adjustments before you start driving.

To change the seat-back angle of the front seats, pull up on the lever on the outside of the seat bottom.

To adjust the seat forward and backward, pull up on the lever under the right side of the seat cushion's front edge. Move the seat to the desired position and release the lever. Try to move the seat to make sure it is locked in position.

Driver's Manual Lumbar Support

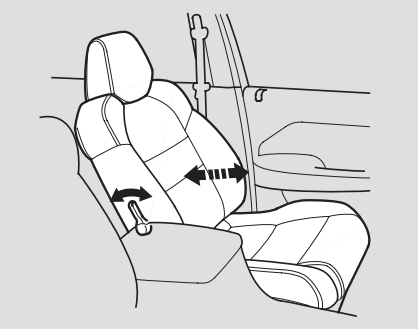

Without Touring Package

Vary the lumbar support by moving the lever on the right side of the seat-back. Move the lever forward or backward to adjust the lumbar support through its full range.

Head Restraints

See page 15 for important safety information and a warning about how to properly position the head restraints.

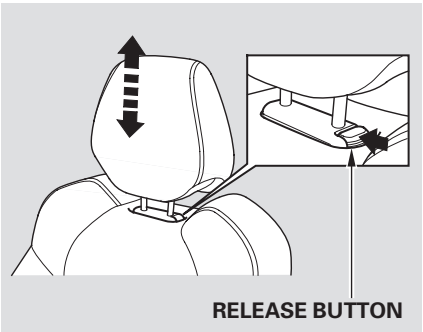

Your vehicle is equipped with head restraints in all seating positions to help protect you and your passengers from whiplash and other injuries.
They are most effective when you adjust them so the back of the occupant's head rests against the center of the restraint.

The head restraints adjust for height. You need both hands to adjust the restraint. Do not attempt to adjust it while driving. To raise it, pull upward. To lower the restraint, push the release button sideways, and push the restraint down.

Detachable Seat Belt Anchors

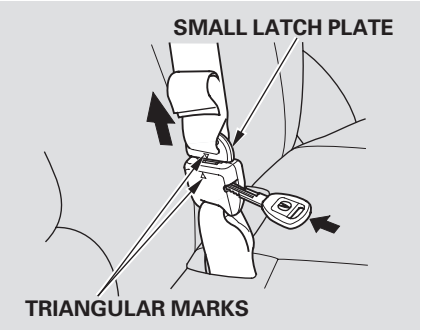

To unlatch the detachable anchor, insert a key into the slot on the side of the small buckle. Line up the triangle marks on the plate and buckle when reattaching the belt and buckle.

⚠ WARNING

Using a seat belt with the detachable anchor unlatched increases the chance of serious injury or death in a crash.

Before using the seat belt, make sure the detachable anchor is correctly latched.

Adjusting the Second Seat

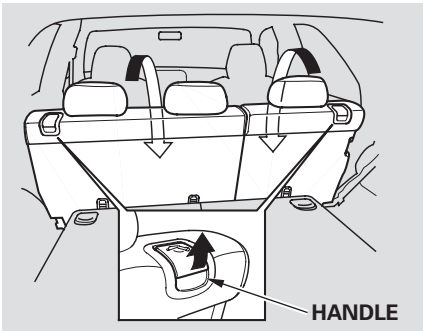

To change the seat-back angle of the seats in the second row, pull up on the handle on the outside of the seat-back.

Folding the Second Seat

The left and right halves can be folded up separately.

1. If you are folding the left half of the seat, use the ignition key to release the center seat belt from the detachable anchor. Allow the seat belt to retract into the roof. Insert the latch plate into the roof holder.
2. Lower the head restraint to its lowest position.
3. Pull up the handle on the outside of the seat-back.
4. Fold the seat-back forward.

Reverse this procedure to return the seat to the upright position. Make sure the seat is locked securely before driving.

Third Row Access

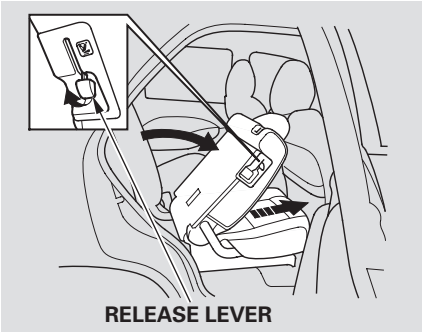

To get into the third row seats, pull up the lever on the side of the passenger's side second row seat-back. The seat-back will tilt forward, and the seat will slide forward.

After you return the seat-back to the upright position, push the whole seat backwards until it latches. Make sure the seat is fully latched before sitting in it.

Adjusting the Third Row Seat

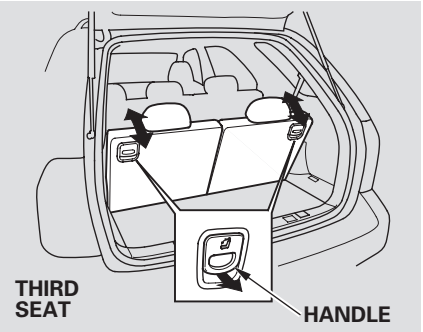

Pull on the handle on the back of the seat-back, move the seat-back to the desired position, and release the handle. Let the seat-back latch in the new position.

Folding the Third Row Seat

1. Remove the head restraints by pushing the release buttons and pulling the restraints out.

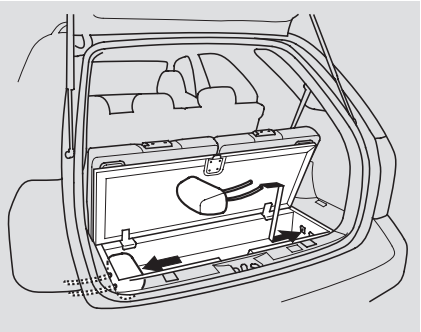

2. Store the head restraints in the storage compartment. Make sure the head restraints are face up (storing them face down can damage the compartment or the headrests), then insert the shafts into the holes in the sides of the storage compartment.

3. Use the ignition key to release the seat belt from the detachable anchor.

NOTE: To fold the third row seat, the second row must be folded down or completely up right.

4. Unlock the seat-back by pulling the handle. Push the seat-back forward.

Make sure the outer shoulder belts are positioned on each hook whenever the third seat is folded.

Reverse this procedure to return the seat to the upright position. Make sure the seat is locked securely before driving. Reinstall the head restraints. Reconnect the seat belts to the detachable anchors.

Make sure all items in the cargo area are secured. Loose items can fly forward and cause injury if you have to brake hard (See **Carrying Cargo** on page 195).

Seat Heaters

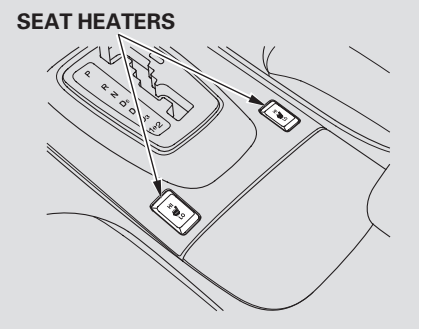

Both front seats are equipped with seat heaters. The passenger seat is only heated in the seat bottom because of the side airbag off system. The ignition switch must be in the ON (II) position to use them. Push the front of the switch, HI, to rapidly heat up the seat. After the seat reaches a comfortable temperature, select LO by pushing the back of the switch. This will keep the seat warm.

In HI, the heater turns off when the seat gets warm, and turns back on after the seat temperature drops.

In LO, the heater runs continuously. It does not cycle with temperature changes.

Follow these precautions when using the seat heaters:

- Use the HI setting only to heat the seats quickly, because it draws large amounts of current from the battery.
- If the engine is left idling for an extended period, do not use the seat heaters, even on the LO setting. It can weaken the battery, causing hard starting.

Power Windows

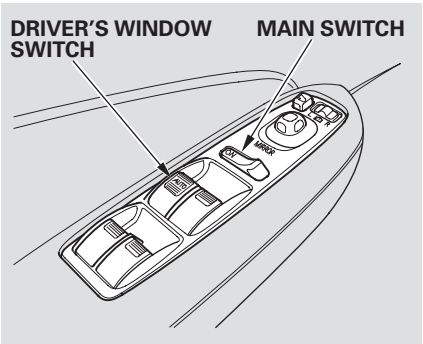

Turn the ignition switch to the ON (II) position to raise or lower any window. To open a window, push the switch down and hold it. Release the switch when you want the window to stop. Pull back on the switch and hold it to close the window.

The windows will operate for up to 10 minutes after you turn off the ignition switch. Opening either front door cancels this function.

⚠WARNING

Closing a power window on someone's hands or fingers can cause serious injury.

Make sure your passengers are away from the windows before closing them.

AUTO — To open/close the driver's window, push the window switch firmly down or up to the second detent, and release it. The window will automatically go up or down all the way. To stop the window, pull/push on the window switch briefly.

If the MAIN switch is OFF, the passenger windows cannot be raised or lowered. Keep the MAIN switch off when you have children in the vehicle so they do not injure themselves by operating the windows unintentionally.

AUTO REVERSE — If the driver's window senses any obstacle while it is closing automatically, it will reverse direction, and then stop. To close the window, remove the obstacle, then use the window switch again.

Auto reverse stops sensing when the window is almost closed. You should always check that all passengers and objects are away from the window before closing it.

If your vehicle's battery is disconnected or goes dead, or the driver's window fuse is removed, the AUTO function will be disabled. The power window system needs to be reset after reconnecting the battery or installing the fuse.

1. Start the engine. Push down and hold the driver's window switch until the window is fully open.

2. Pull and hold the driver's window switch to close the window completely, then hold the switch for about 2 seconds.

If the power windows do not operate properly after resetting, have your vehicle checked by your dealer.

Moonroof

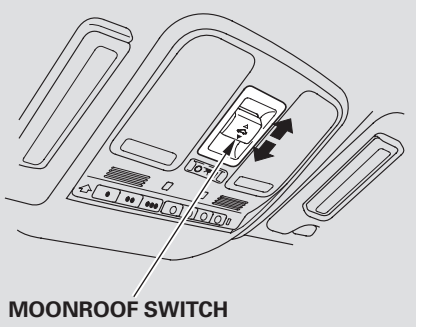

To open the moonroof, pull back the moonroof switch firmly.

To close the moonroof fully, push the switch forward.

CONTINUED

Moonroof, Parking Brake

To tilt the moonroof up, press the button in. To closed it, push the button forward. Make sure everyone's hands are away from the moonroof before opening or closing it.

⚠WARNING

Opening or closing the moonroof on someone's hands or fingers can cause serious injury.

Make sure all hands and fingers are clear of the moonroof before opening or closing it.

You can open and close the moonroof for up to 10 minutes after you turn off the ignition switch. Opening either front door cancels this function.

NOTICE

If you try to open the moonroof in below-freezing temperatures, or when it is covered with snow or ice, you can damage the moonroof panel or its motor.

Parking Brake

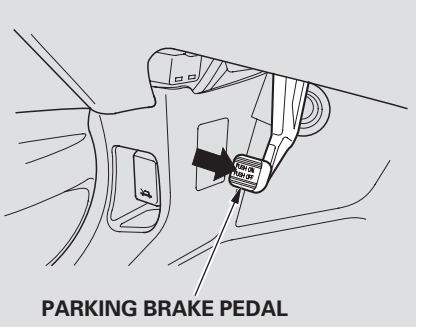

To apply the parking brake, push the pedal down with your foot. To release it, push on the pedal again. The parking brake indicator on the instrument panel should go out when the parking brake is fully released (see page 61).

NOTICE

Driving the vehicle with the parking brake applied can damage the rear brakes and axles. A beeper will sound if the vehicle is driven with the parking brake on.

Mirrors

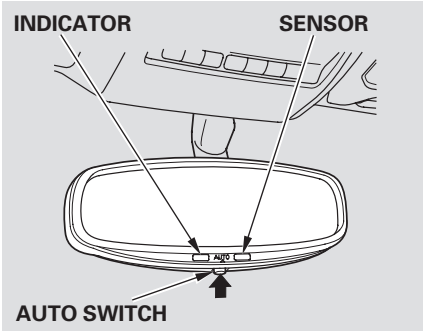

Keep the inside and outside mirrors clean and adjusted for best visibility. Be sure to adjust the mirrors before you start driving.

The inside mirror can automatically darken to reduce glare. To turn on this feature, press the button on the bottom of the mirror. The AUTO indicator comes on as a reminder. When it is on, the mirror darkens when it senses the headlights of a vehicle behind you, then returns to normal visibility when the lights are gone. Press the button again to turn off this sensing.

NOTICE

There is also a sensor on the back of the mirror. Items hung on the mirror may block this sensor and affect performance.

Mirrors

Adjusting the Power Mirrors

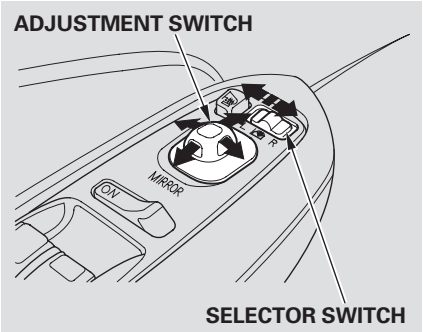

1. Turn the ignition switch to the ON (II) position.
2. Move the selector switch to L (driver's side) or R (passenger's side).

3. Push the appropriate edge of the adjustment switch to move the mirror right, left, up, or down.

4. When you finish, move the selector switch to the center (off) position. This turns the adjustment switch off to keep your settings.

Touring model only
With the selector switch in the center (off) position, the passenger's side mirror will pivot downward slightly when you shift the transmission into Reverse. This gives you a better view of the side of the vehicle while parallel parking. The mirror returns to its original position when you take the transmission out of reverse.

Turn this feature off by leaving the selector switch in the left or right position.

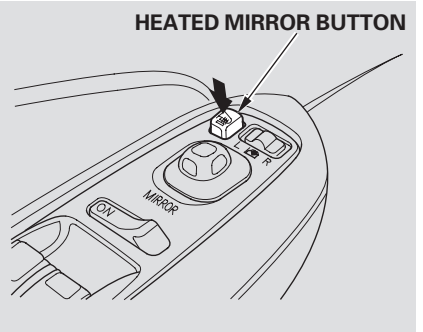

The outside mirrors are heated to remove fog and frost. With the ignition switch in the ON (II) position, turn on the heaters by pressing the button. The indicator in the button comes on as a reminder. Press the button again to turn the heaters off.

Touring Model
Your vehicle has a memory feature for the driver's seat and outside mirror positions.

Seat, except for power lumbar, and outside mirror positions, can be stored in separate memories. You select a memorized position by pushing the appropriate button or using the appropriate remote transmitter (Memory 1 or Memory 2).

Storing a Driving Position in Memory
Store a driving position only when the vehicle is parked.

1. Turn the ignition switch to the ON (II) position. You cannot add a new driving position in the memory unless the ignition switch is in the ON (II) position. You can recall a memorized position with the ignition switch in any position.

2. Adjust the seat to a comfortable position (see page 86).
   Adjust the outside mirrors for best visibility (see page 96).

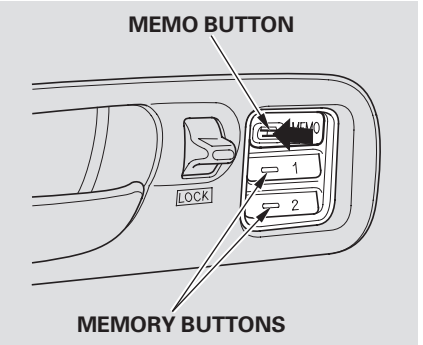

3. Press and release the MEMO button on the control panel. You will hear a beep. Immediately press and hold one of the memory buttons (1 or 2) until you hear two beeps. The indicator in the memory button will come on. The current positions of the driver's seat and outside mirrors are now stored.

CONTINUED

Driving Position Memory System

Doing any of the following after pressing the MEMO button will cancel the storing procedure.

- Not pressing a memory button within 5 seconds.
- Readjusting the seat position.
- Readjusting the outside mirror position.

Each memory button stores only one driving position. Storing a new position erases the previous setting stored in that button's memory. If you want to add a new position while retaining the current one, use the other memory button.

Selecting a Memorized Position
To select a memorized position, do this:

1. Make sure the vehicle is parked.
2. Press the desired memory button (1 or 2) until you hear a beep, then release the button.

The system will move the seat and outside mirrors to the memorized positions. The indicator in the selected memory button will flash during movement. When the adjustments are complete, you will hear two beeps, and the indicator will remain on.

To stop the system's automatic adjustment, do any of these actions:

- Press any button on the control panel: MEMO, 1, or 2.
- Push any of the adjustment switches for the seat.
- Shift out of Park.
- Adjust the outside mirrors.

If desired, you can use the adjustment switches to change the positions of the seat or outside mirrors after they are in their memorized position. If you change the memorized position, the indicator in the memory button will go out. To keep this driving position for later use, you must store it in the driving position memory.

Light Control Switch

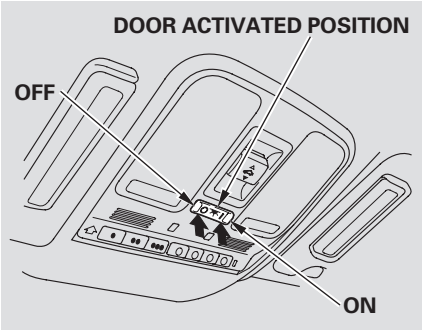

When the switch is in the OFF position:

- The individual door lights or the tailgate light will operate when a door or the tailgate is opened.
- The map lights in the front can be turned on and off by pushing each lens, the second and third row map lights cannot.

When the switch is in the Door Activated *position:*

- The individual map lights come on when any door or the tailgate is opened, or when the remote transmitter is used to unlock the doors. When the doors and the tailgate are closed, each light can be turned on and off by pushing the lens.
- The cargo area (3rd row) light comes on when any door or the tailgate is opened if the switch in the light is in the door activated position. When the doors and the tailgate are closed, the cargo area light can be turned on with the switch in the light.

The lights go out about 6 seconds after all the doors and the tailgate are closed.

With any door or the tailgate left open, the lights stay on about 3 minutes, then go out.

When the light control switch is in the ON *position:*

- All the individual map lights and footwell lights come on and stay on as long as the switch remains in the ON position.
- The cargo (3rd row) area light comes on if the switch is in the door activated position.

Interior Lights

Individual Map Lights
Turn on the front row individual map lights by pushing the lens. Push the lens again to turn it off. With the light control switch in the door activated position, the second row map lights can be turned on by pushing the lens. Push the lens again to turn it off.

Tailgate Light
The light in the tailgate has an on-off switch to control if the light comes on when the tailgate is opened.

Individual Interior Lights
The courtesy lights in all four doors come on when you open any door. The light around the ignition switch only come on when you open the driver's door. After you close the door, the ignition switch light stays on for several seconds.

Cargo Area Light

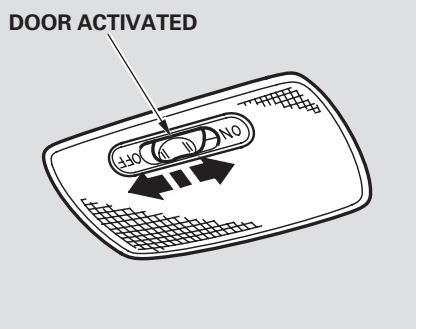

The light control switch must be in either the ON or DOOR ACTIVATED position for the cargo area light to come on.
The light has a three-position switch. In the OFF position, the light does not come on. In the center position, it comes on when you open the tailgate or doors. In the ON position, it stays on continuously.
This light also works with the light control switch (see page 99).

Interior Convenience Items

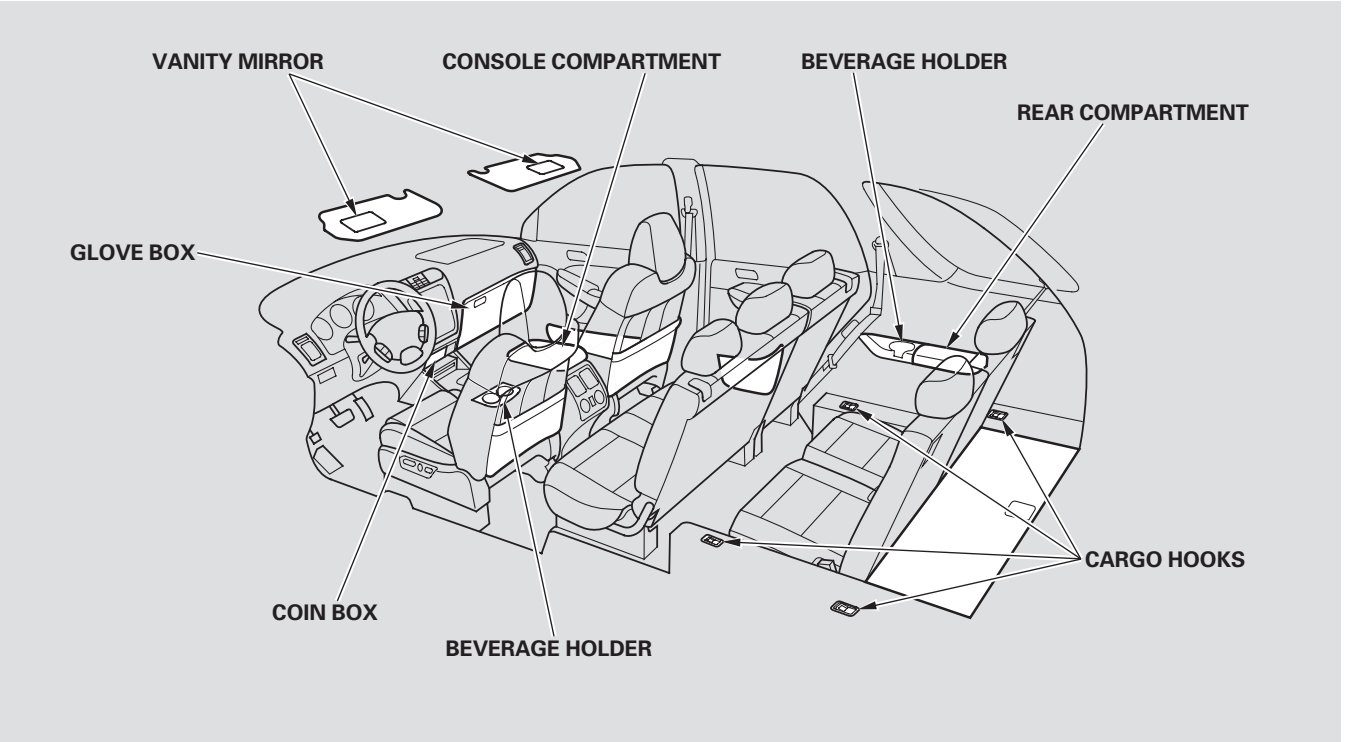

Interior Convenience Items

Beverage Holders

Be careful when you are using the beverage holders. A spilled liquid that is very hot can scald you or your passengers. Spilled liquids can damage the upholstery, carpeting, and electrical components in the interior.

Open the front beverage holder by pushing on the lid.

Console Compartment

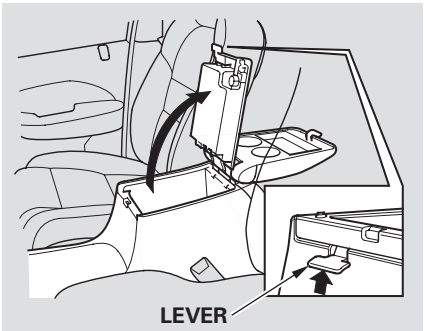

Your vehicle is equipped with a flip-over center console lid that provides a tray and a beverage holder for the second row passengers. To open the beverage holders, pull up the center lever on the center console and lift the lid.

Glove Box

Open the glove box by squeezing the handle. Close it with a firm push. Lock or unlock the glove box with the master key.

⚠ WARNING

An open glove box can cause serious injury to your passenger in a crash, even if the passenger is wearing the seat belt.

Always keep the glove box closed while driving.

Rear Compartment
Storage compartments are located in the armrests for the third row seat. To open a compartment, pull the lever and lift the lid.

Cargo Hooks
The hooks on the floor of the cargo area enable you to tie down items stored in the back. Make sure all stored items are secured before driving.

Sun Visor

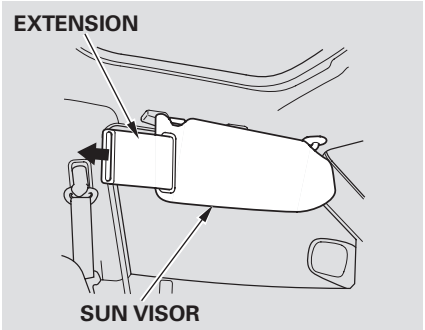

When using the sun visor for the side window, remove the support rod from the clip and swing it out. Slide the extension out to get more coverage on the side window.

Make sure you put the sun visor back in place when you are getting into or out of the vehicle. Do not use the sun visor extension over the rear view mirror.

Vanity Mirror

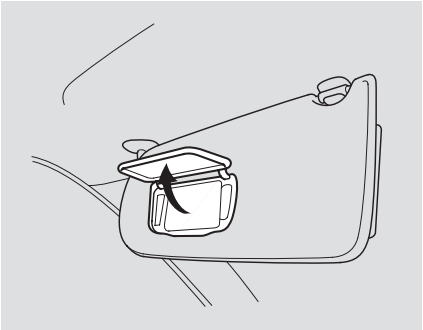

Pull up the vanity mirror cover to use it.

The light comes on only when the parking lights or headlights are on.

Accessory Power Sockets
Your vehicle has three accessory power sockets. The front accessory power socket is located under the audio system. The second socket is located in the center console compartment. The rear socket is behind the third seat on the driver's side.

To use the socket in the console compartment, pull the cover up.

To use an accessory power socket, the ignition switch must be in the ACCESSORY (I) or ON (II) position.

These sockets are intended to supply power for 12 volt DC accessories that are rated 120 watts or less (10 amps).

When both the front and console sockets are being used, the combined power rating of both accessories should be 120 watts or less (10 amps).

None of the sockets will power an automotive type cigarette lighter element.

Features

The climate control system in your vehicle provides a comfortable driving environment in all weather conditions.

The standard audio system has many features. This section describes those features and how to use them. (If you selected an optional audio system, refer to the operating instructions that came with it.)

Your vehicle has an anti-theft audio system that requires a code number to enable it.

Vents, Heating, and A/C 106
Airflow Buttons..... 107
Rear Climate Control 111
Climate Control Sensors..... 111
Playing the Radio..... 112
Radio Reception..... 116
Playing XM® Satellite Radio..... 118
Playing a CD..... 123
CD Changer..... 126
Protecting Your CDs..... 128
CD Changer Error Messages 129
Steering Wheel Controls 130
Radio Theft Protection..... 131
Rear Entertainment System..... 132
Security System 145
Cruise Control..... 146
Trip Computer 149
Rear View Camera and Monitor .. 155
HomeLink Universal Transceiver..... 156
HandsFreeLink™..... 161
OnStar 175

Vents, Heating, and A/C

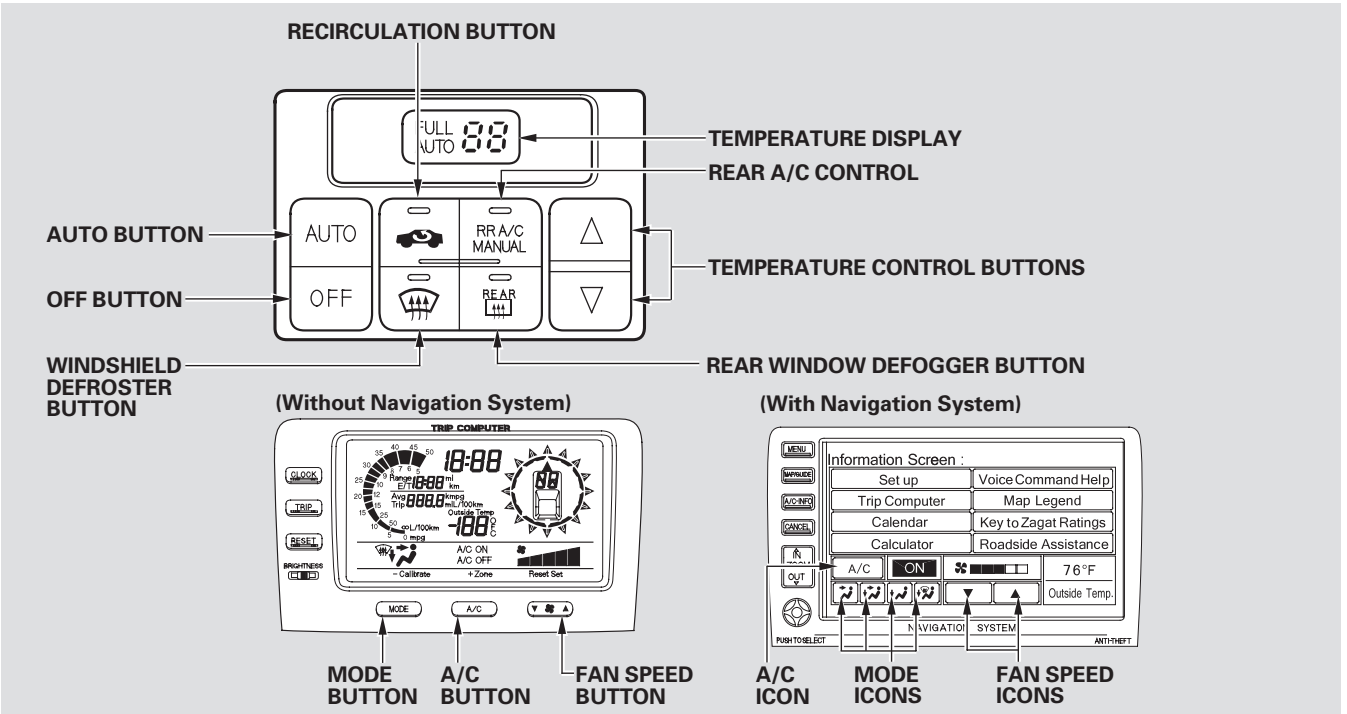

Voice Control System
Only on models equipped with Navigation System
The climate control system for your vehicle can also be operated using the voice control system. See the Navi section in your Quick Start Guide for an overview of this system, and the Navigation System manual for complete details.

Fan Speed Control Button/Icon
Push the ▲ button or icon to increase the fan speed and air flow. Push the ▼ button or icon to decrease it.

Temperature Control Buttons
Push the △ button to increase the temperature of air flow. Push the ▽ button to decrease it. When you set the temperature to its lower limit or its upper limit, the system runs at full cooling or heating only. It does not regulate the interior temperature.

Air Conditioning (A/C) Button/ Icon
This button or icon turns the air conditioning on and off. You will see A/C ON or A/C OFF in the display.

Rear Window Defogger Button
This button turns the rear window defogger on and off (see page 77).

Recirculation Button
When the indicator in the button is on, air from the vehicle's interior is recirculated throughout the system. When the indicator is off, air is brought in from the outside of the vehicle (Fresh Air mode).
The outside air intakes for the heating and cooling system are at the base of the windshield. Keep this area clear of leaves and other debris. The system should be left in fresh air mode under almost all conditions. Keeping the system in recirculation mode, particularly with the A/C off, can cause the windows to fog up. Switch to recirculation mode when driving through dusty or smoky conditions, then return to fresh air mode.

Vents, Heating, and A/C

Mode Control Button/Icon
Use the mode control button or icon to select the vents the air flows from.

NOTE: Regardless of what mode you are in, air flows out of the corner vents unless the system is shut off or the vent is manually shut off.

Air flows from the center vents in the dashboard.

Airflow is divided between the vents in the dashboard and the floor vents.

Air flows from the floor vents.

Airflow is divided between the floor vents and the defroster vents at the base of the windshield.

Air flows from the defroster vents at the base of the windshield.

When you select , the system automatically switches to fresh air mode and turns on the A/C.

Ventilation
The flow-through ventilation system draws in outside air, circulates it through the interior, then exhausts it through vents near the rear side panels.

1. Set the temperature to maximum.
2. Make sure the A/C is off.
3. Select and Fresh Air mode.
4. Set the fan to the desired speed.

Using the Heater
The heater uses engine coolant to warm the air. If the engine is cold, it will be several minutes before you feel warm air coming from the system.

Vehicles without Navigation System
1. Select and Fresh Air mode.
2. Set the fan to the desired speed.
3. Adjust the warmth of the air with the temperature control buttons.

Vehicles with Navigation System
1. Press the A/C-INFO button to show the information screen.
2. Select the desired mode by touching the MODE icon, and set the fan to the desired speed by touching the ▲ or ▼ icon.
3. Adjust the warmth with the temperature control buttons (△ or ▽).

Using the A/C
Air conditioning places an extra load on the engine. Watch the engine coolant temperature gauge (see page 69). If it moves near the red zone, turn off the A/C until the gauge reads normally.

1. Turn on the A/C by pressing the A/C button or touching the A/C icon on the models with navigation system. A/C ON will be displayed on the screen.
2. Make sure the temperature is set to maximum cold.
3. Select .
4. If the outside air is humid, select Recirculation mode. If the outside air is dry, select Fresh Air mode.
5. Set the fan to the desired speed.

If the interior is very warm, you can cool it down more rapidly by partially opening the windows, turning on the A/C, and setting the fan to maximum speed in fresh air mode.

NOTE: The vehicle has two A/C and heater units. Both these units are controlled by the front panel controls, unless the RR A/C button is turned on. The rear passengers can also adjust the direction, and temperature and amount of the airflow.

Dehumidify the Interior
Air conditioning, as it cools, removes moisture from the air. When used in combination with the heater, it makes the interior warm and dry.

1. Switch the fan on.
2. Turn on the air conditioning.
3. Select and Fresh Air mode.
4. Adjust the temperature to your preference.

This setting is suitable for all driving conditions whenever the outside temperature is above 32°F (0°C).

To Defog and Defrost
To remove fog from the inside of the windows:

1. Set the fan to the desired speed, or high for faster defrosting.
2. Select . The system automatically switches to Fresh Air mode and turns on the A/C. The A/C indicator will not come on in U.S. vehicles, if the A/C was off to start with.
3. Adjust the temperature so the airflow feels warm.
4. Select to help clear the rear window.
5. To increase airflow to the windshield, close the corner vents.

When you switch to another mode from , the A/C turns off. But if it was on to start with, it stays on.

Vents, Heating, and A/C

To Remove Exterior Frost or Ice From the Windows

1. Select . The system automatically switches to Fresh Air mode and turns on the A/C. The A/C indicator will not come on in U.S. vehicles, if the A/C was off to start with.
2. Select .
3. Set the fan and temperature controls to maximum level.

To clear the windshield faster, you can close the dashboard corner vents by rotating the wheel below each vent. This sends more warm air to the windshield defroster vents. Once the windshield is clear, select Fresh Air mode to avoid fogging the windows.
For your safety, make sure you have a clear view through all the windows before driving.

Using Automatic Climate Control

The Automatic Climate Control system can adjust the fan speed and airflow levels to maintain the interior temperature you select.

1. Press the AUTO button.
2. Set the desired temperature with the temperature control buttons. You will see FULL AUTO in the system's display.

The system automatically selects the proper mix of conditioned and/or heated air that will, as quickly as possible, raise or lower the interior temperature from its current level to the set temperature. In FULL AUTO the rear A/C control panel cannot be used.

If you set the temperature to its lower or its upper limit, the system runs at full cooling or heating only. It does not regulate the interior temperature.

In cold weather, the fan will not come on automatically until the heater starts to develop warm air.

Manual Operation

You can manually select various functions of the Climate Control system when it is in FULL AUTO. All other features remain automatically controlled.
Manually selecting a function causes the word FULL in the display to go out.

To Turn Everything Off

Press the OFF button. However, a lack of airflow can cause the windows to fog up. You should keep the fan on at all times so stale air and moisture do not build up in the interior and cause fogging.

Using the Rear A/C Unit

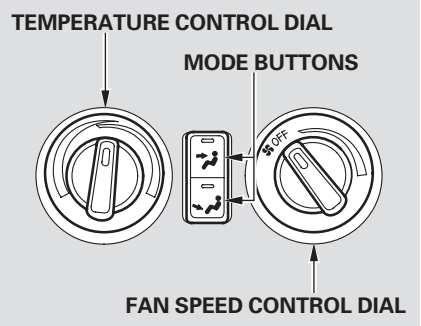

Press the RR A/C MANUAL button to enable the rear A/C control panel. The indicator in the button will come on. A passenger in the second row can then use the temperature control dial, fan speed dial, and mode buttons to adjust the temperature and airflow to their preference. This is limited by the system's minimum and maximum temperature.

NOTE: Individual rear control settings are shut off when the ignition is turned off and return to the automatic settings. They must be reset when the ignition is turned on again.

Climate Control Sensors

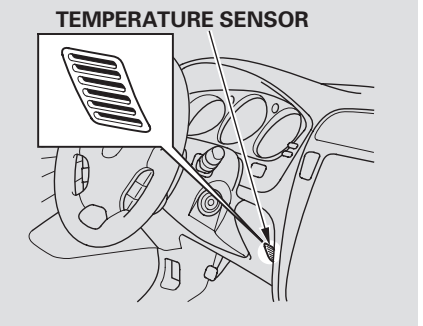

The climate control system has two sensors. A sunlight sensor is in the top of the dashboard, and a temperature sensor is next to the steering column. Do not cover the sensors or spill any liquid on them.

Playing the Radio

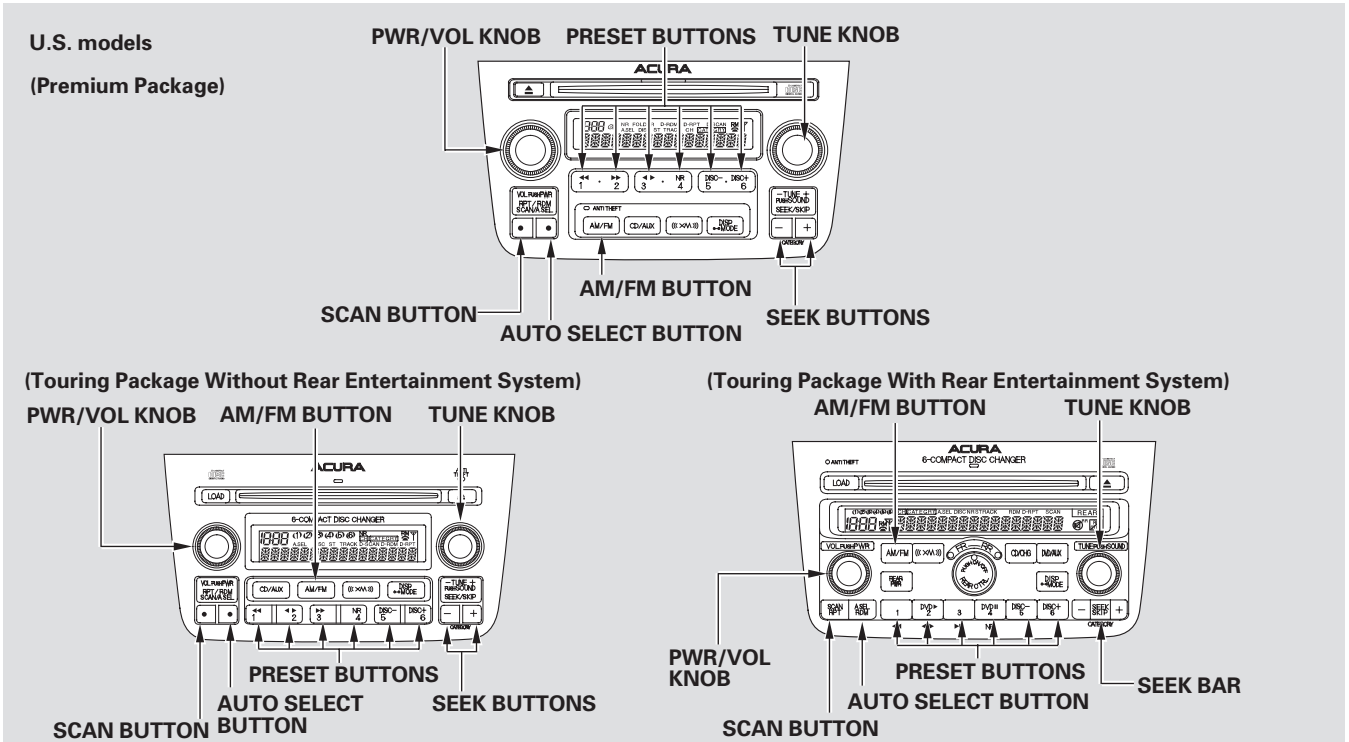

Canadian models

(Touring Package With Rear Entertainment System)

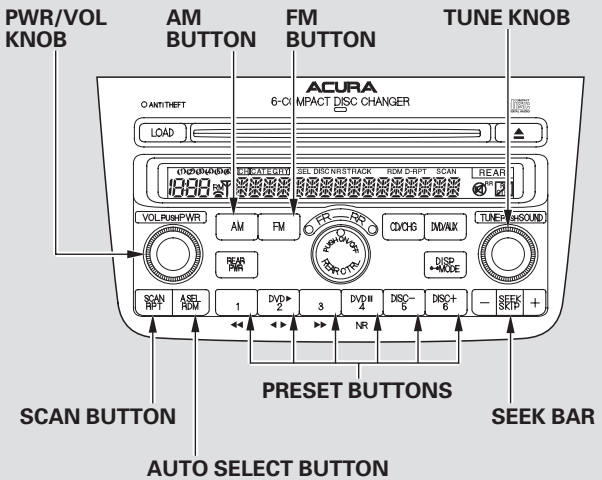

(Touring Package Without Rear Entertainment System)

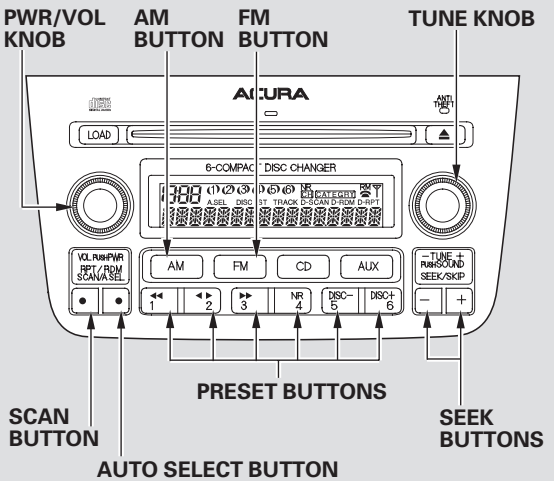

Playing the Radio

Voice Control System
Only on models equipped with Navigation System
The audio system for your vehicle can also be operated using the voice control system. See the Navi section in your Quick Start Guide for an overview of this system, and the navigation system manual for complete details.

To Play the Radio
The ignition switch must be in the ACCESSORY (I) or ON (II) position. Turn the system on by pushing the PWR/VOL knob. Adjust the volume by turning the same knob.

The band and frequency that the radio was last turned to is displayed. To change bands, press the AM or FM button. On the FM band, ST will be displayed if the station is broadcasting in stereo. Stereo reproduction in AM is not available.

To Select a Station
You can use any of five methods to find radio stations on the selected band: **TUNE, SEEK, SCAN,** the preset buttons, and **AUTO SELECT**.

TUNE — Use the TUNE knob to tune the radio to a desired frequency. Turn the knob right to tune to a higher frequency, or left to tune to a lower frequency.

SEEK — The SEEK function searches up and down from the current frequency to find a station with a strong signal. To activate it, press the + or — SEEK button, then release it.

SCAN — The scan function samples all stations with strong signals on the selected band. To activate it, press the SCAN button, then release it. You will see SCAN in the display. The system will scan for a station with a strong signal. When it finds one, it will stop and play that station for about 10 seconds.

If you do nothing, the system will scan for the next strong station and play it for 10 seconds. When it plays a station that you want to listen to, press the SCAN button again.

Preset — Each preset button can store one frequency on AM and two frequencies on FM.

1. Select the desired band, AM or FM. FM1 and FM2 let you store two frequencies with each preset button.

2. Use the tune, seek, or scan function to tune the radio to a desired station.

3. Pick a preset button, and hold it until you hear a beep.

4. Repeat steps 1 through 3 to store a total of six stations on AM and twelve stations on FM.

AUTO SELECT — If you are traveling far from home and can no longer receive your preset stations, you can use the auto select feature to find stations in the local area.

Press the A. SEL button. "A.SEL" flashes in the display, and the system goes into scan mode for several seconds. It stores the frequencies of six AM and twelve FM stations in the preset buttons.

You will see a "0" displayed if auto select cannot find a strong station for every preset button.

If you do not like the stations auto select has stored, you can store other frequencies on the preset buttons. Use the TUNE, SEEK, or SCAN function to find stations, then store them in the preset buttons as described previously.

To turn off auto select, press the A. SEL button. This restores the presets you originally set.

Adjusting the Sound

BALANCE — Adjust the Balance, or side-to-side strength of the sound.

FADER — Adjust the Fader, or the front-to-back strength of the sound.

TREBLE — Adjust the Treble in the sound.

BASS — Adjust the Bass in the sound.

Press the TUNE knob repeatedly to display Bass, Treble, Balance, and Fader settings. Turn the TUNE knob to adjust the setting. The indicators on the display will show you the adjustable range. The system will return to the audio display in about 5 seconds.

On models with navigation system, push and hold the TUNE button for 5 seconds to display information on the navigation screen.

Radio Reception

Audio System Lighting
You can use the instrument panel brightness control knob to adjust the illumination of the audio system (see page 76). The audio system illuminates when the parking lights are on, even if the radio is turned off.

Radio Frequencies
Your vehicle's radio can receive the complete AM and FM bands. Those bands cover these frequencies:

AM band: 530 to 1,710 kilohertz
FM band: 87.7 to 107.9 megahertz

Radio stations on the AM band are assigned frequencies at least 10 kilohertz apart (530, 540, 550). Stations on the FM band are assigned frequencies at least 0.2 megahertz apart (87.9, 88.1, 88.3). Stations must use these exact frequencies. It is fairly common for stations to round-off the frequency in their advertising, so your radio could display a frequency of 100.9 even though the announcer may identify the station as "FM101."

Radio Reception
How well your vehicle's radio receives stations is dependent on many factors, such as the distance from the station's transmitter, nearby large objects, and atmospheric conditions.

A radio station's signal gets weaker as you get farther away from its transmitter. If you are listening to an AM station, you will notice the sound volume becoming weaker, and the station drifting in and out. If you are listening to an FM station, you will see the stereo indicator flickering off and on as the signal weakens. Eventually, the stereo indicator will go off and the sound will fade completely as you get out of range of the station's signal.

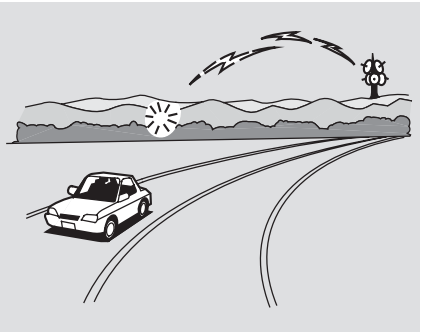

Driving very near the transmitter of a station that is broadcasting on a frequency close to the frequency of the station you are listening to can also affect your radio's reception. You may temporarily hear both stations, or hear only the station you are close to.

Radio Reception

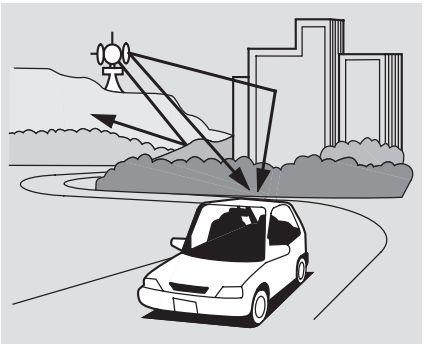

Radio signals, especially on the FM band, are deflected by large objects such as buildings and hills. Your radio then receives both the direct signal from the station's transmitter, and the deflected signal. This causes the sound to distort or flutter. This is a main cause of poor radio reception in city driving.

Radio reception can be affected by atmospheric conditions such as thunderstorms, high humidity, and even sunspots. You may be able to receive a distant radio station one day and not receive it the next day because of a change in conditions.

Electrical interference from passing vehicles and stationary sources can cause temporary reception problems.

As required by the FCC:
Changes or modifications not expressly approved by the party responsible for compliance could void the user's authority to operate the equipment.

Playing the XM® Satellite Radio (U.S. Models)

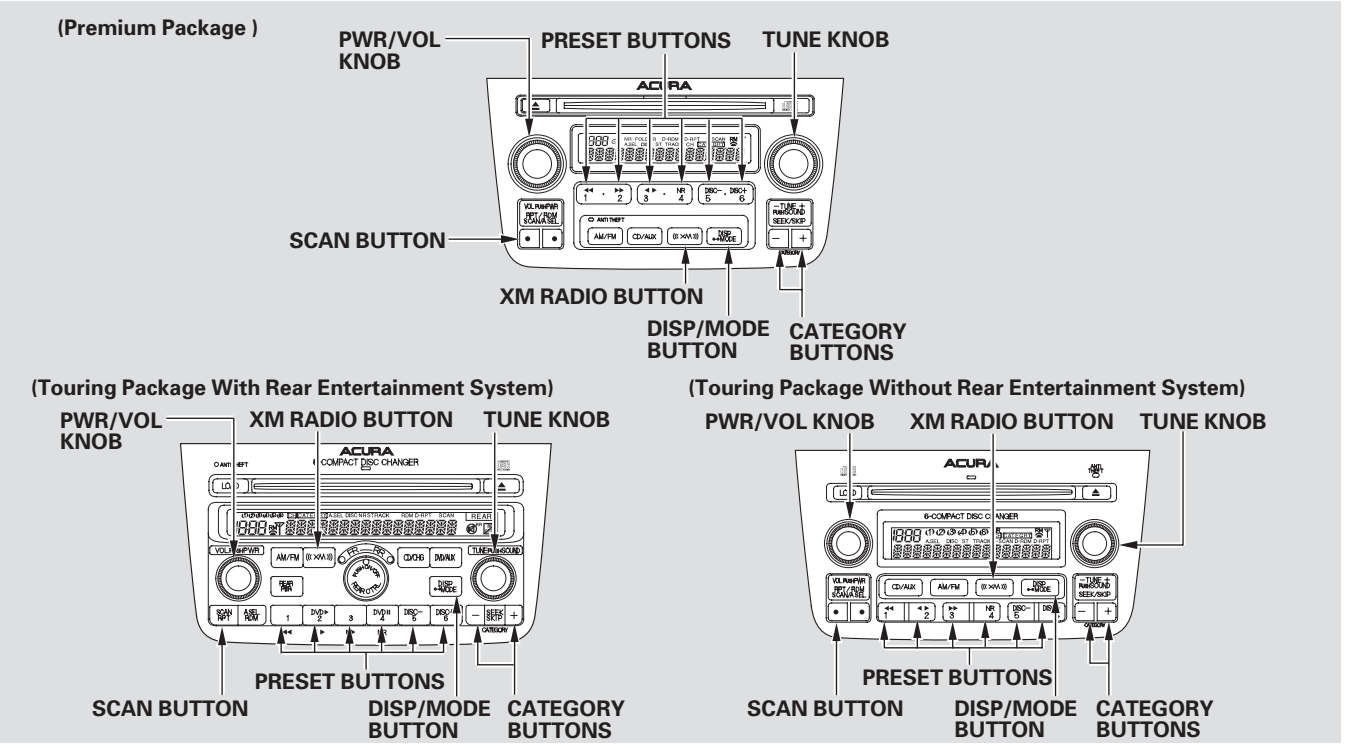

Playing the XM® Satellite Radio (U.S. Models)

Your vehicle is capable of receiving XM® Satellite Radio anywhere in the United States, except Hawaii and Alaska.
XM® is a registered trademark of XM Satellite Radio, Inc.

XM radio receives signals from two satellites to produce clear, high-quality digital reception. It offers many channels in several categories. Along with a large selection of different types of music, XM radio allows you to view channel and category selections in the display.

Operating the Satellite Radio
To listen to satellite radio, turn the ignition switch to the ACCESSORY (I) or ON (II) position. Push the PWR/VOL knob to turn on the audio system, and press the XM button. Adjust the volume by turning the PWR/VOL knob. The last channel you listened to will show in the display.

MODE — To switch between the channel mode and the category mode, press and hold the DISP/MODE button until the mode changes. On models with navigation system, touch the MODE icon on the audio display.

In the channel mode, you can select all of the available channels. In the category mode, such as Jazz, Rock, Classical, etc., you can select all of the channels within that category.

Each time you press and release the DISP/MODE button, the display changes in the following sequence: channel name, channel number, category, artist name, and music title.

You may experience periods when XM Radio does not transmit the artist's name and song title information. If this happens, there is nothing wrong with your system.

On models with navigation system, push and hold the TUNE button for 5 seconds to display XM information on the navigation screen.

TUNE — Turn the TUNE knob left or right to select channels. In the category mode, you can only select channels within that category.

CATEGORY (⊖ or ⊕) — In the category mode, press either button to select another category.

Playing the XM® Satellite Radio (U.S. Models)

SCAN — The SCAN function gives you a sampling of all channels while in the channel mode. In the category mode, only the stations within that category are scanned. To activate SCAN, press the SCAN button or touch the SCAN icon on the audio display (models with navigation system). The system plays each channel in numerical order for a few seconds, then selects the next channel. When you hear a channel you want to continue listening to, press the button or touch the icon again.

Preset — You can store up to 12 preset channels using the six preset buttons or preset icons (on models with navigation system). Each button stores one channel from the XM1 band and one channel from the XM2 band.

To store a channel:

1. Press the XM button. Either XM1 or XM2 will show in the display.
2. Use the TUNE knob, or the CATEGORY or SCAN buttons to tune to a desired channel.

In the category mode, only channels within that category can be selected. In the channel mode, all channels can be selected.

3. Pick the preset button (icon) you want for that channel. Press and hold the button (icon) until you hear a beep.
4. Repeat steps 2 and 3 to store the first six channels.
5. Press the XM button again. The other XM band will show. Store the next six channels using steps 2 and 3.

Once a channel is stored, simply press and release the proper preset button (icon) to tune to it.

The presets will be lost if your vehicle's battery goes dead, is disconnected, or the radio fuse is removed.

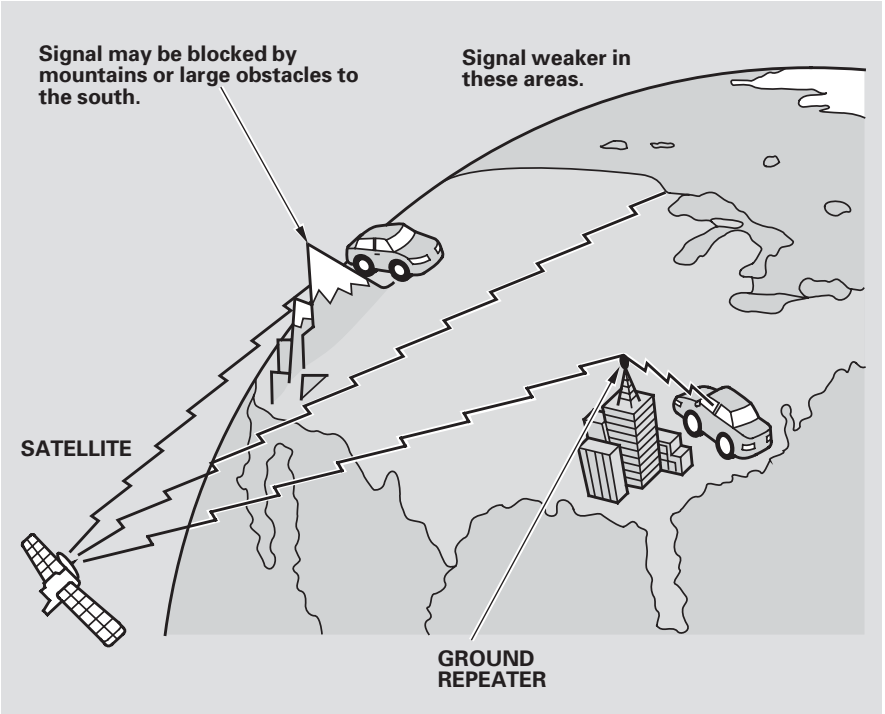

The XM satellites are in orbit over the equator; therefore, objects south of the vehicle may cause satellite reception interruptions. To help compensate for this, ground-based repeaters are placed in major metropolitan areas.
Satellite signals are more likely to be blocked by tall buildings and mountains the farther north you travel from the equator.

CONTINUED

Playing the XM® Satellite Radio (U.S. Models)

Depending on where you drive, you may experience reception problems. Interference can be caused by any of these conditions:

- Driving on the south side of an east/west mountain road.
- Driving on the north side of a large commercial truck on an east/west road.
- Driving in tunnels.
- Driving on a road beside a vertical wall, steep cliff, or hill to the south of you.
- Driving on the lower level of a multi-tiered road.
- Driving on a single lane road alongside dense trees taller than 50 ft. (15 m) to the south of you.
- Cargo may be attached to roof rack.

There may be other geographic situations that could affect satellite radio reception.

As required by the FCC:
Changes or modifications not expressly approved by the party responsible for compliance could void the user's authority to operate the equipment.

Receiving Satellite Radio Service
If your XM Radio service has expired or you purchased your vehicle from a previous owner, you can listen to a sampling of the broadcasts available on XM Satellite Radio. With the ignition switch in the ACCESSORY (I) or ON (II) position, push the PWR/VOL knob to turn on the audio system and press the XM button. A variety of music types and styles will play.

If you decide to purchase XM satellite radio service, contact XM Radio at *www.xmradio.com*, or at 1-800-852-9696. You will need to give them your radio I.D. number and your credit card number. To get your radio I.D. number, turn the TUNE knob until "0" appears in the display. Your I.D. will appear in the display.

After you've registered with XM Radio, keep your audio system in the Satellite Radio mode while you wait for activation. This should take about 30 minutes.

While waiting for activation, make sure your vehicle remains in an open area with good reception. Once your audio system is activated, "CATEGORY" or "CH" will appear in the display, and you'll be able to listen to XM Radio broadcasts. XM Radio will continue to send an activation signal to your vehicle for at least 12 hours from the activation request. If the service has not been activated after 36 hours, contact XM Radio.

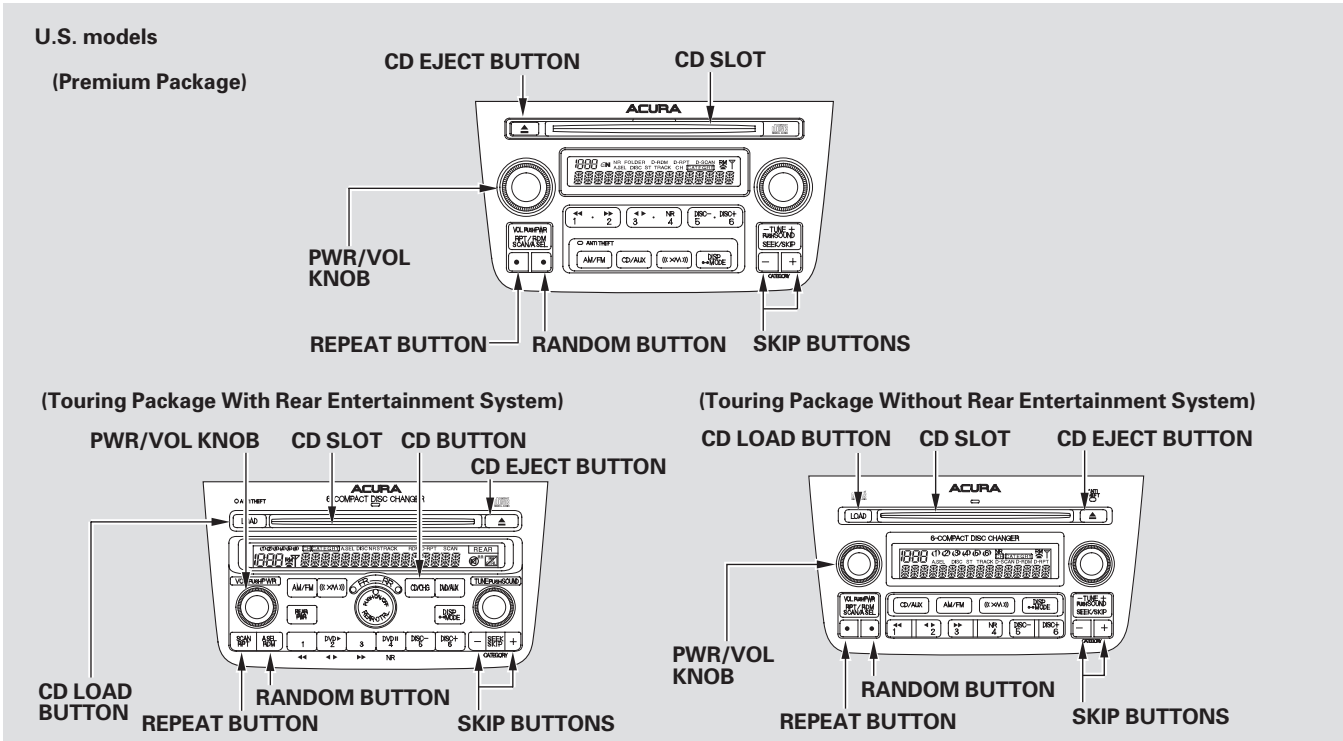
U.S. models
(Premium Package)
CD EJECT BUTTON
CD SLOT
PWR/VOL KNOB
REPEAT BUTTON
RANDOM BUTTON
SKIP BUTTONS
(Touring Package With Rear Entertainment System)
PWR/VOL KNOB
CD SLOT
CD BUTTON
CD EJECT BUTTON
CD LOAD BUTTON
RANDOM BUTTON
REPEAT BUTTON
SKIP BUTTONS
(Touring Package Without Rear Entertainment System)
CD LOAD BUTTON
CD SLOT
CD EJECT BUTTON
PWR/VOL KNOB
RANDOM BUTTON
REPEAT BUTTON
SKIP BUTTONS

Playing a CD

Canadian models

(Touring Package With Rear Entertainment System)

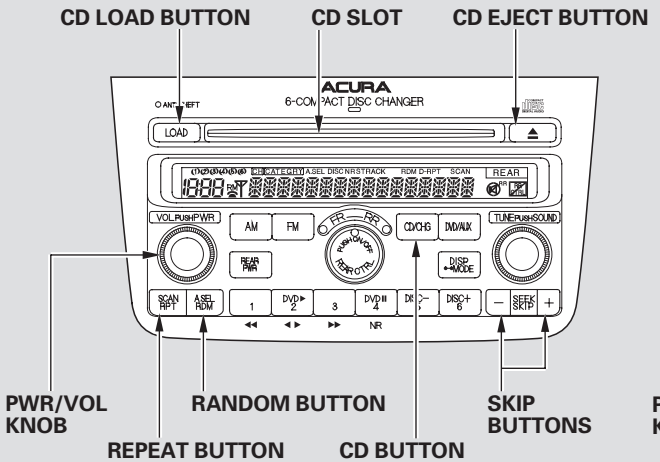

(Touring Package Without Rear Entertainment System)

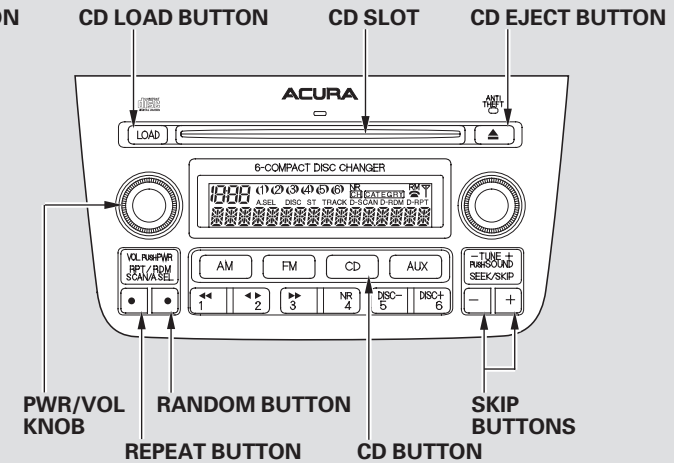

To Play a CD
Premium model only
With the ignition in the ACCESSORY (I) or ON (II) position, insert a CD into the CD slot. The drive will pull the CD in the rest of the way and begin to play it.

You operate the CD player with the same controls used for the radio. The number of the track playing is shown in the display. The system will continuously play a CD until you change modes.

SKIP — Each time you press and release the + skip button the player skips forward to the beginning of the next track. Press and release the — skip button to skip backward to the beginning of the current track. Press it again to skip to the beginning of the previous track.

To move rapidly within a track, press and hold the + or — skip button.

REPEAT — To continuously replay a track, press and release the RPT button. You will see RPT/REPEAT in the display. Press the RPT button again to turn it off.

RANDOM — This feature plays the tracks in random order. To activate Random Play, press and release the RDM button. You will see RDM in the display. Press the RDM button again to return to normal play.

To Stop Playing a CD
Press the eject button to remove the CD. If you eject the CD, but do not remove it from the slot, the system will automatically reload the CD after 15 seconds and put it in pause mode. To begin playing, press the CD button.

Press the AM or FM button (AM/FM button on the U.S. models) to switch to the radio while a CD is playing.

If you turn the system off while a CD is playing, either with the PWR/VOL knob or by turning off the ignition, the disc will stay in the drive. When you turn the system back on, the CD will begin playing where it left off.

CONTINUED

CD Changer

Touring Model
The audio system on your vehicle has an in-dash CD changer that holds up to six discs.
To load CDs or operate CD changer, the ignition switch must be in the ACCESSORY (I) or ON (II) position.

You cannot load and play 3-inch (8-cm) discs in this system.

Loading CDs in the Changer

1. Press and hold the LOAD button until you hear a beep, then release the button.

   To load only one CD, press and release the Load button.

2. On the left side of the display, the CD Loaded indicator for an empty position will begin blinking.

3. When you see LOAD in the display, insert the disc into the CD slot. Insert it only about halfway, the drive will pull it in the rest of the way. You will again see the dashes in the display as the CD is loaded.

4. When LOAD appears again in the display, insert the next disc into the CD slot. Do not try to insert a disc until LOAD appears. You could damage the audio unit.

5. Repeat this until all six positions are loaded. The system will then begin playing the last CD loaded.

If you are not loading CDs into all six positions, press the LOAD button again after the last CD has loaded. The system will begin playing the last CD loaded.

If you stop loading CDs before all six positions are filled, and you do not press the load button, the system will wait for 10 seconds, then stop the load operation and begin playing the last CD loaded.

If you press the LOAD button while a disc is playing, the system will stop playing that disc and start the loading sequence. It will then play the disc just loaded.

You can also load a CD into an empty position while a CD is playing by pressing the appropriate preset button. Select an empty position (the CD loaded indicator is off), and press the preset button for that position (1 to 6). The system will stop playing the current CD and start the loading sequence. It will then play the CD just loaded.

Removing CDs from the Changer

To remove the disc that is currently playing, press the eject button. You will see "EJECT" in the display. The system automatically begins the Load sequence so you can load another CD in that position. If you do not load another CD, after 10 seconds the system begins playing the next disc in the changer. If the changer is empty, the system selects the previous mode (AM, FM, or XM radio).

If you do not remove the disc from the slot, the system will reload the disc after 10 seconds and begin playing it.

To remove a different CD from the changer, first select it with the appropriate preset button. When that CD begins playing, press the eject button.

If you press the Eject button while listening to the radio, XM radio, or with the audio system turned off, the disc that was last selected is ejected. After that disc is ejected, pressing the Eject button again will eject the next disc in the numerical order. By doing this six times, you can remove all the CDs from the changer.

In any mode, if you press the eject button and hold it until you hear a beep, the system will eject all of the discs in the changer.

You can also eject discs when the ignition switch is off. The disc that was last selected is ejected first. You can eject up to six discs, one at a time.

Protecting Your CDs

General Information

- When using CD-R discs, use only high quality CDs labeled for audio use.
- When recording a CD-R, the recording must be closed for it to be used by the system.
- CD-RW discs will not work in this unit.
- Play only standard round CDs. Odd-shaped CDs may jam in the drive or cause other problems.
- Handle your CDs properly to prevent damage and skipping.

NOTICE

Do not use discs with adhesive labels. The label can curl up and cause the disc to jam in the unit.

Protecting CDs

When a CD is not being played, store it in its case to protect it from dust and other contamination. To prevent warpage, keep CDs out of direct sunlight and extreme heat.

To clean a CD, use a clean soft cloth. Wipe across the CD from the center to the outside edge.

A new CD may be rough on the inner and outer edges. The small plastic pieces causing this roughness can flake off and fall on the recording surface of the CD, causing skipping or other problems. Remove these pieces by rubbing the inner and outer edges with the side of a pencil or pen.

Never try to insert foreign objects in the CD player or the magazine.

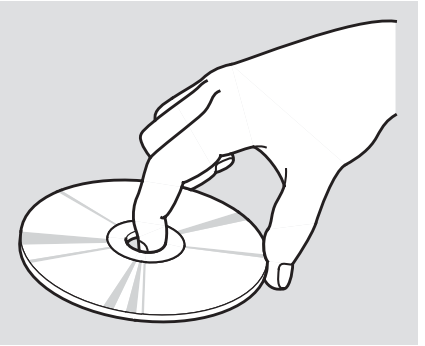

Handle a CD by its edges; never touch either surface. Do not place stabilizer rings or labels on the CD. These, along with contamination from fingerprints, liquids, and felt-tip pens, can cause the CD to not play properly or possibly jam in the drive.

CD Changer Error Messages

If you see an error message in the display while operating the CD changer, find the cause in the following charts. If you cannot clear the error message, take the vehicle to your dealer.

Error Messages	Cause	Solution
Cd ErE0	Disc changer malfunction.	See your dealer.
Cd Er-H	High temperature.	Will disappear when the temperature returns to normal.
Cd1 E01	Disc changer malfunction.	See your dealer.
Cd1 ---H	High temperature.	Will disappear when the temperature returns to normal.

Steering Wheel Controls

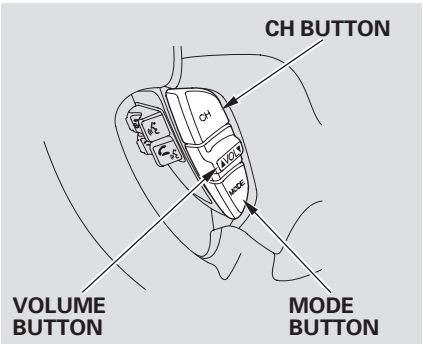

Three controls for the audio system are mounted in the steering wheel hub. These let you control basic functions without removing your hand from the wheel.

The MODE button changes the audio mode between FM1, FM2, AM, XM, CD, and DVD/AUX (if a disc is inserted).

The middle button adjusts the volume up (▲) or down (▼). Press the top or bottom of the button and hold it until the desired volume is reached, then release it.

The CH button has two functions, depending on whether you are listening to the radio, or playing a CD.

If you are listening to the radio, use the CH button to change stations. Each time you press this button, the system advances to the next preset station on the band you are listening to. You will see the number of the selected preset button in the display. To change bands, or to change from FM1 to FM2, press the AM/FM button.

If you are playing a CD, the system skips to the beginning of the next track each time you push the CH button. You will see the disc and track number in the display.

Your vehicle's audio system will disable itself if it is disconnected from electrical power for any reason. To make it work again, you must enter a specific five-digit code with the Preset buttons. Because there are hundreds of number combinations possible from the five digits, making the system work without knowing the exact code is nearly impossible.

You should have received a card that lists your audio system code number and serial number. It is best to store this card in a safe place at home. In addition, you should write the audio system's serial number in this owner's manual.

If you should happen to lose the card, you must obtain the code number from your dealer. To do this, you will need the system's serial number.

If your vehicle's battery is disconnected or goes dead, the audio system will disable itself. If this happens, you will see "Code" in the frequency display the next time you turn on the system. Use the Preset buttons to enter the five-digit code. The code is located on the radio code card included in your Owner's Manual kit. When it is entered correctly, the radio will start playing.

If you make a mistake entering the code, do not start over; complete the five-digit sequence, then enter the correct code. You have 10 tries to enter the correct code. If you are unsuccessful in 10 attempts, you must then leave the system on for 1 hour before trying again.

If the code card is lost, an Acura dealer can access your code with your radio's serial number. To access the serial number, turn the radio on. It must display "COdE", then turn the radio off. Push the preset 1, preset 6, and power buttons at the same time, then quickly release.

You will have to store your favorite stations in the preset buttons after the system begins working. Your original settings were lost when the power was disconnected.

Rear Entertainment System

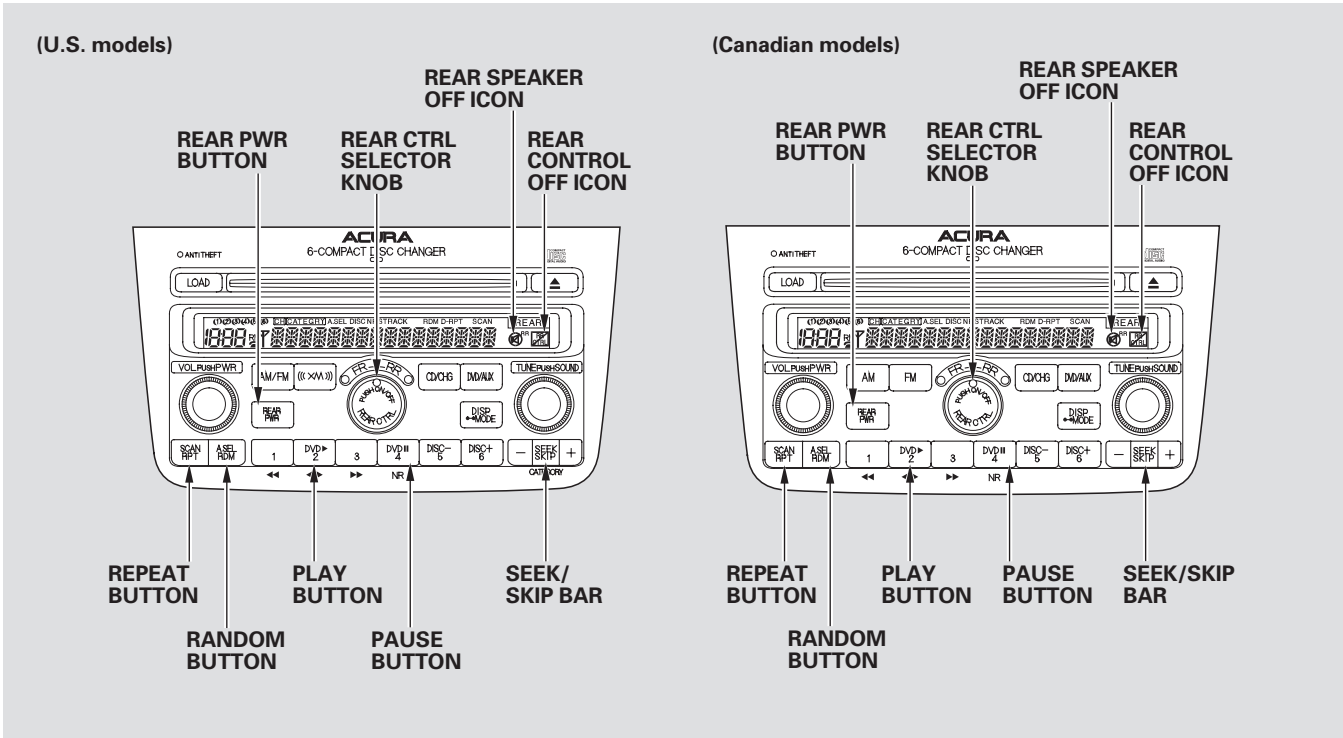

If equipped
With this system, the rear passengers can enjoy a different entertainment source (AM/FM radio, XM radio, CD changer, DVD player or AUX) than the front seat occupants. The audio is broadcast through the supplied wireless headphones.

To Turn On the System
Press the REAR PWR button. To turn on the rear controls (ceiling panel or remote), press the REAR CTRL knob. The system's icon shows in the right side display. Your passengers can then operate the rear system with the control panel in the ceiling or with the remote control. Press the REAR CTRL knob again to turn the rear controls off. You will see the Rear Controls Off icon in the right display.

The rear system selects the source it was last set to. If that source has been removed (the DVD has been ejected from the player, for example), you will see "_ _ _ _" in the display. You must select another source.

Rear Speakers
When you turn on the system, the rear speakers are automatically turned off. You will see the Rear Speakers Off icon in the display. The sound for the rear system is sent to the wireless headphones.

If you want to turn the rear speakers on again, press and hold the REAR PWR button until the Rear Speakers Off icon goes off.

NOTE: The rear speakers are connected to the front system, so they will always play the source that the front system is set to.

Rear Entertainment System

To Select Rear Entertainment from the Front Control Panel

To operate the rear entertainment system from the front panel, turn the REAR CTRL knob clockwise. The amber RR LED comes on to show that the control panel is enabled.

To play the radio or XM radio, the buttons for the front entertainment system have the same functions.

If a CD is loaded in the main CD changer, select CD/CHG. If the CD is loaded in the lower player, select DVD/AUX.

Operating the DVD Player from the Front Control Panel

The DVD player in your rear entertainment system can play DVD video discs and CDs. It features Dolby* noise reduction.

* Dolby noise reduction manufactured under license from Dolby Laboratories Licensing Corporation. "DOLBY" and the double-D symbol ◻◻ are trademarks of Dolby Laboratories Licensing Corporation.

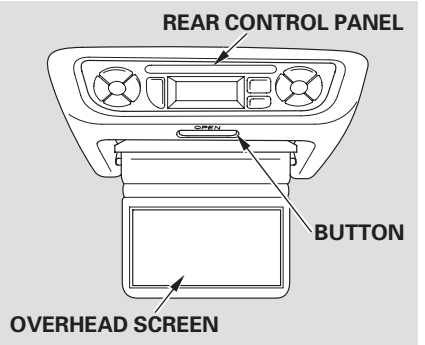

Open the overhead screen by pushing on the button. The screen will swing down part-way. Pivot the screen the rest of the way (to detent one or two). If you pivot the screen too far forward, past detent three, the display will turn off. Pivot the screen back to the detent to turn the display back on. To close the screen, pivot it up until it latches.

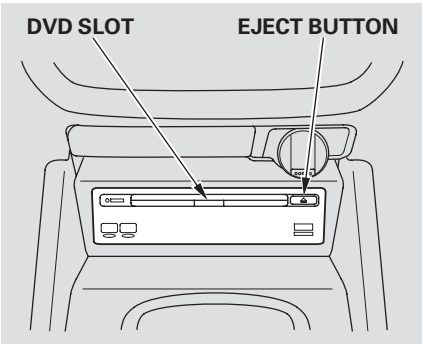

Turn the REAR CTRL knob clockwise. The amber RR LED will come on to show that the control panel is now enabled.

Insert a DVD or CD into the DVD player below the front panel.

Push the disc in halfway, the drive will pull it in the rest of the way.

PLAY — Press the PLAY button if the DVD does not start playing automatically.

PAUSE — Press the PAUSE button to pause the DVD. Press the button again or press PLAY to resume. Pause works only with the DVD player.

SEEK/SKIP — Press and hold the + side to move forward; you will see "CUE" in the display. Press and hold the — side to move backward; you will see "REV" in the display. Release the bar when the system reaches the point you want.

Each time you press and release the + side of the SEEK/SKIP bar, the system skips forward to the beginning of the next track or chapter. Press and release the — side of the bar to skip backward to the beginning of the current track or chapter. Press it again to skip to the beginning of the previous track or chapter.

EJECT — Press the eject button to remove the DVD from the drive.

To Return to Front Audio Controls
To return front panel control to the front audio system, turn the RR CTRL knob counterclockwise.

Rear Entertainment System

Using the Rear Control Panel
Use these buttons to select the entertainment source (radio, XM radio, CD changer, or DVD player/ Auxiliary device). The selected source will be shown in the display. Make sure the rear control operation has not been disabled with the REAR CTRL knob on the front panel.

NOTE: When the display is open, use the manual controls to select icons from the menu.

To Play the Radio from the Rear Control Panel
Use the ◀ and ▶ buttons to select from the stations on the radio preset buttons.

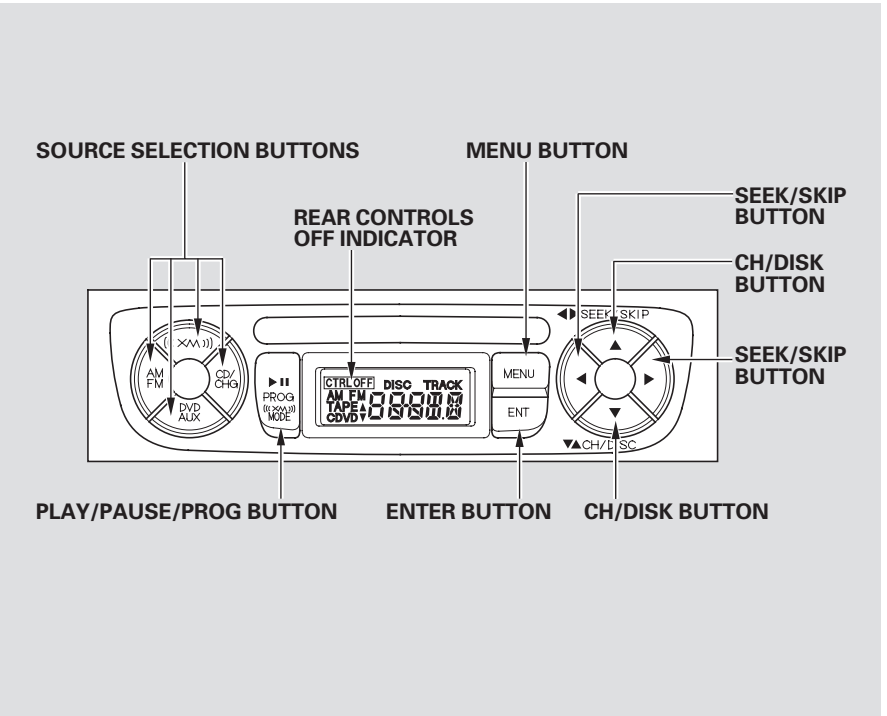

To Play a CD from the Rear Control Panel
If a CD is loaded in the main CD changer, select it by pressing the CD/CHG button. If the CD is loaded in the DVD player, press the DVD/AUX button.

Press the ▶ button to skip to the beginning of the next track. Press the ◀ button to return to the beginning of the current track. If the changer is selected, use the ▼ and ▲ buttons to change discs.

To Play a DVD from the Rear Control Panel
The video screen is for use by rear seat passengers only. The driver and front seat passenger should not try to view the screen while driving.

PLAY/PAUSE/PROG — Press this button when you want to pause the DVD. Press this button again to go back to PLAY.

SEEK/SKIP — Press the ▶ button to skip to the beginning of the next chapter. Press the ◀ button to skip back to the beginning of the current chapter.

MENU/ENT — To select the menu on the DVD, press the MENU button. Use the ◀ , ▶ , ▲ , and ▼ buttons to move to the desired menu selection, then press the ENT button to enter your selection.

Rear Entertainment System

Using the Remote Control
You can use the remote control to select the entertainment source (radio, CD changer, or DVD player/ Auxiliary device). The selected source will be shown in the display.

Make sure the rear control operation has not been disabled with the RR CTRL knob on the front panel. When using the remote control, point it at the rear control panel in the ceiling.

To Play a CD or Radio
The PLAY/PROG, PAUSE, SKIP, and FWD/REW buttons work the same function as the front and rear control panel buttons.

To Play a DVD
The PLAY/PROG, PAUSE, SKIP, and FWD/REW buttons work the same function as the front and rear control panel buttons.

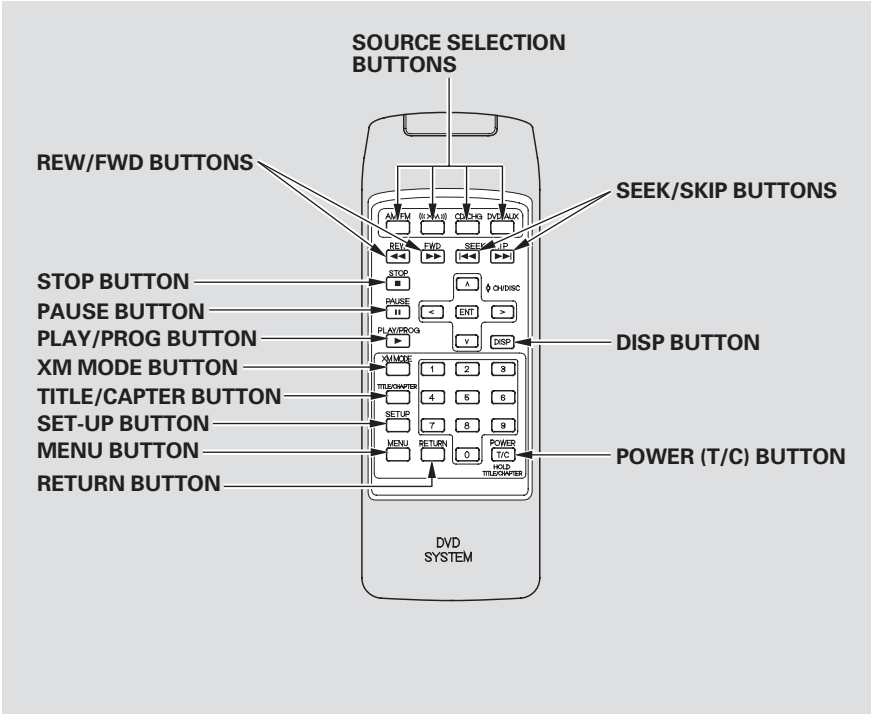

STOP Button — Press this button to stop playing a DVD.

MENU and TITLE Buttons — Some DVDs have menus that allow you to select a dubbed language, subtitles, a chapter list, previews, etc. The menu contents will vary from DVD to DVD.

Use the ◀ , ▶ , ▲ , and ▼ buttons to select the desired menu option. Then press ENT to enter your selection. Use the ◀◀ and ▶▶ buttons to change pages. You can also use the numbered buttons to enter the two-digit number of a menu option. You do not have to press ENT. Press the button again to close the window.

DISP Button — To change the color, contrast, aspect ratio, and brightness of the video screen, press the DISP button. The current setting of one will be displayed on the screen each time you press the button. Use the ◀ and ▶ buttons to change the setting as desired. The display will disappear from the screen several seconds after you stop adjusting the setting.

RETURN Button — In the MENU selection mode, pressing the RETURN button for less than 2 seconds changes the MENU display to the previous page. Pressing the RETURN button for more than 2 seconds while a DVD is playing brings the system into the TITLE enter mode. When you enter your selection, the DVD player will start playing from the selected title.

Replacing the Remote Control Batteries

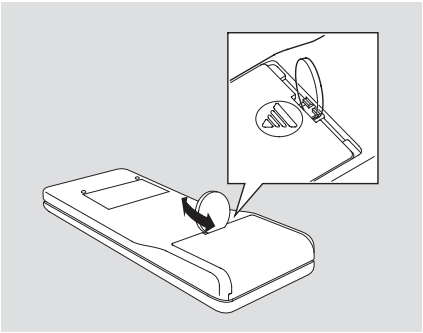

The remote control uses two AA batteries. To replace the batteries, put a coin in the notch on the back. Turn it one-quarter, then slide the cover off. Remove the old batteries. Make sure the polarity of the new batteries is correct when you install them. Slide the cover on until it locks.

As required by the FCC: This device complies with Part 15 of the FCC rules. Operation is subject to the following two conditions: (1) This device may not cause harmful interference, and (2) this device must accept any interference received, including interference that may cause undesired operation.

Changes or modifications not expressly approved by the party responsible for compliance could void the user's authority to operate the equipment.

This device complies with Industry Canada Standard RSS-210. Operation is subject to the following two conditions: (1) this device may not cause interference, and (2) this device must accept any interference that may cause undesired operation of the device.

Storing the Remote Control

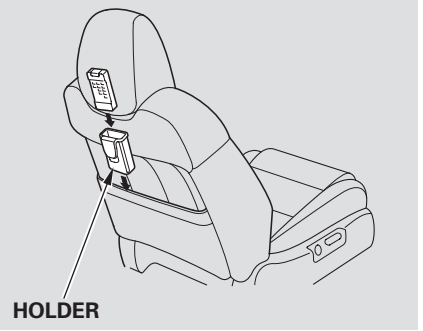

When you are not using the remote control, store it in holder in the front seat-back pocket.

Playable DVDs

There are various types of DVDs available. Some of them are not compatible with your system.
The DVD player in your Rear Entertainment System can play DVDs and CDs bearing the above marks on their packages or jackets. Those packages or jackets should also bear the designation of “1” or “ALL”. DVD-ROMs cannot be played in this system.

DVD Player Error Messages

If you see an error message in the display while operating the DVD player, find the cause in the chart below. If you cannot clear the message, take your vehicle to your dealer.

Error Message	Cause	Solution
DVD DISC	FOCUS Error	Press the EJECT button and pull out the DVD. Check if it is inserted correctly in the DVD Player. Make sure the DVD is not scratched or damaged.
DVD ERR	Mechanical Error, or a DVD has been loaded in the CD player	Press the EJECT button and pull out the DVD. Check it for damage or deformation. If the DVD cannot be pulled out, or the error message does not disappear after the DVD is ejected, see your dealer. Do not try to force the DVD out of the player.
DVD Hot	High Temperature	Will disappear when the temperature returns to normal.
Low BAT	Low Vehicle Battery Voltage	Run the engine to recharge the battery.

Rear Entertainment System

Wireless Headphones

Some state and local government agencies prohibit the use of headphones by the driver of a motor vehicle. Always obey applicable laws and regulations.

The audio for the rear entertainment system is sent to the wireless headphones that come with the system. When using the headphones, make sure you wear them correctly: L (left) and R (right) are marked on the sides of the frame. The antennas are in the front of the earpieces. If you wear the headphones backwards, the antennas will be aimed away from the system, affecting the sound quality and range.

To use the headphones, pivot the earpieces outward. This turns them on. To adjust the volume, turn the dial on the bottom of the right earpiece. When you remove the headphones, the earpieces automatically pivot inward, and the headphones turn off. The headphones operate only in the second or third row. They do not work in the front seats or outside the vehicle. When not in use, store the headphones in the pocket of either front seat or in the cargo area.

Replacing Batteries

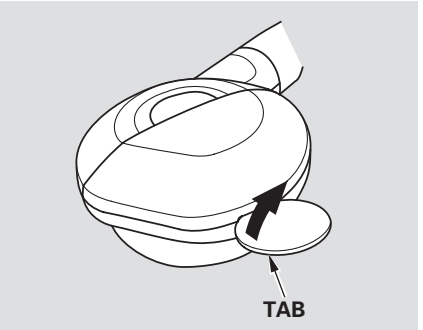

Each headphone uses one AAA battery. The battery is under the cover on the left earpiece. To remove the cover, insert a coin in the slot and twist it slightly to pry the cover away from the earpiece. Pull the cover outward, and pivot it out of the way.

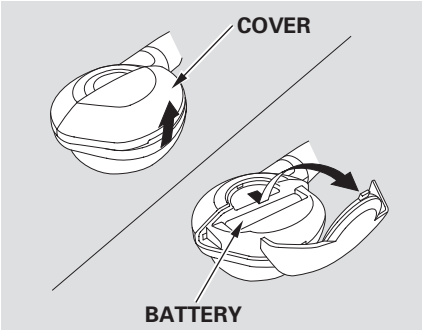

Remove the battery. Install the new battery in the earpiece as shown in the diagram next to the battery slot. Slide the cover back into place on the earpiece, then press down on the back edge to lock it in place.

Auxiliary Input Jacks

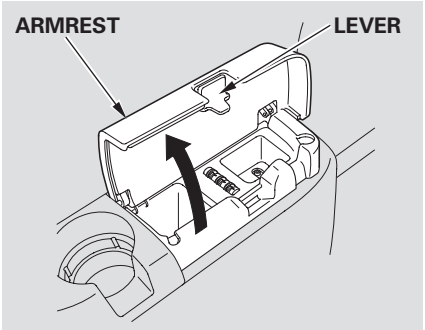

Auxiliary input jacks and wired headphone jacks for the rear entertainment system are under the third seat armrest on the passenger's side. To access these jacks, open the cover by pulling up on the lever.

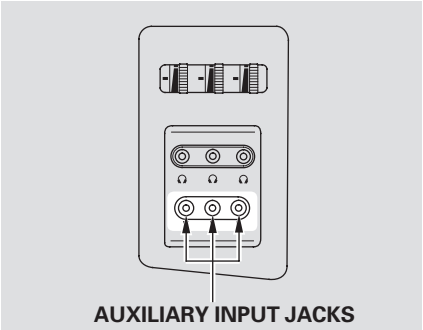

The system will accept auxiliary inputs from standard video games and video equipment.

Some video game power supplies may cause poor picture quality.

V = Video jack
L = Left audio jack
R = Right audio jack

CONTINUED

Rear Entertainment System

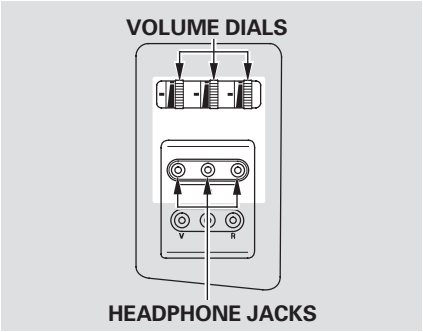

There are three wired headphone jacks for the third seat passengers. Each jack has its own volume control. These headphones are not supplied with the vehicle.

Security System

The security system helps to protect your vehicle and valuables from theft. The horn sounds and a combination of headlights and parking lights flash if someone attempts to break into your vehicle or remove the radio or navigation and DVD components. This alarm continues for 2 minutes, then the system resets. To reset an alarming system before the 2 minutes have elapsed, unlock the driver's door with the key or the remote transmitter.

The security system automatically sets 15 seconds after you lock the doors, hood, and the tailgate. For the system to activate, you must lock the doors from the outside with the key, lock tab, door lock switch, or remote transmitter. The security system indicator next to the driver's door lock starts blinking immediately to show you the system is setting itself.

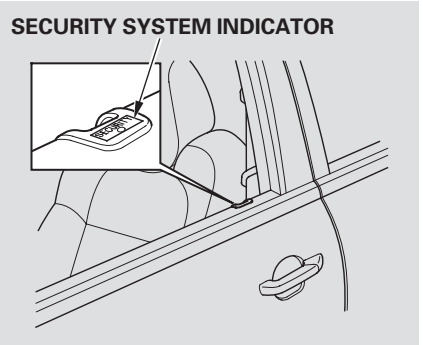

Once the security system is set, opening any door or the tailgate without using the key or the remote transmitter, or opening the hood, will cause it to alarm. It also alarms if the radio, navigation and DVD components are removed from the dashboard or the wiring is cut.

The security system will not set if the hood, tailgate, or any door is not fully closed. If the system will not set, check the Door and Tailgate Open Monitor on the instrument panel (see page 62) to see if the doors and tailgate are fully closed. Since it is not part of the monitor display, manually check the hood.

NOTE: Use the remote transmitter to quickly check that the hood, tailgate and all doors are closed. Push the lock button twice. There should be an audible confirmation beep.

Do not attempt to alter this system or add other devices to it.

Cruise Control

Cruise control allows you to maintain a set speed above 25 mph (40 km/h) without keeping your foot on the accelerator pedal. It should be used for cruising on straight, open highways. It is not recommended for city driving, winding roads, slippery roads, heavy rain, or bad weather.

⚠ WARNING

Improper use of cruise control can lead to a crash.

Use cruise control only when traveling on open highways in good weather.

Using Cruise Control

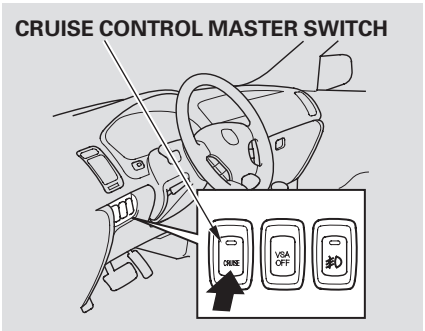

1. Push in the cruise control master switch. The indicator in the switch will come on.

2. Accelerate to the desired cruising speed above 25 mph (40 km/h).

3. Press and release the SET/DECEL button on the steering wheel. The indicator on the instrument panel comes on to show the system is now activated.

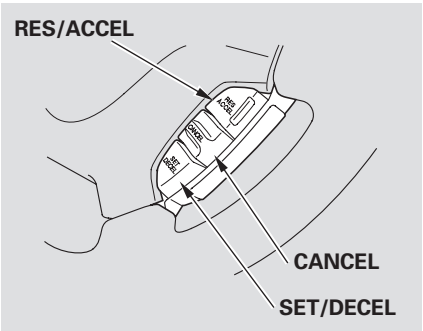

Cruise control may not hold the set speed when you are going up and down hills. If your speed increases going down a hill, use the brakes to slow down. This will cancel cruise control. To resume the set speed, press the RES/ACCEL button. The CRUISE CONTROL indicator on the instrument panel comes on.

Changing the Set Speed
You can increase the set cruising speed in any of these ways:

- Press and hold the RES/ACCEL button. When you reach the desired cruising speed, release the button.
- Push on the accelerator pedal. Accelerate to the desired cruising speed, and press the SET/DECEL button.
- To increase your speed in very small amounts, tap the RES/ACCEL button. Each time you do this, the vehicle will speed up about 1 mph (1.6 km/h).

You can decrease the set cruising speed in any of these ways:

NOTE: If you need to decrease your speed quickly, use the brakes as you normally would.

- Press and hold the SET/DECEL button. Release the button when you reach the desired speed.
- To slow down in very small amounts, tap the SET/DECEL button. Each time you do this, your vehicle will slow down about 1 mph (1.6 km/h).
- Tap the brake pedal lightly with your foot. The CRUISE CONTROL indicator on the instrument panel will go out. When the vehicle slows to the desired speed, press the SET/DECEL button.

Even with cruise control turned on, you can still use the accelerator pedal to speed up for passing. After completing the pass, take your foot off the accelerator pedal. The vehicle will return to the set cruising speed.

Resting your foot on the brake pedal causes cruise control to cancel.

Canceling Cruise Control

You can cancel cruise control in any of these ways:

- Tap the brake pedal.
- Push the CANCEL button on the steering wheel.
- Push the cruise control master button.

Resuming the Set Speed

When you push the CANCEL button or tap the brake pedal, the system remembers the previously set speed. To return to that speed, accelerate to above 25 mph (40 km/h), and then press and release the RES/ACCEL button. The CRUISE CONTROL indicator comes on. The vehicle accelerates to the same speed as before.

Pressing the cruise control master switch turns the system completely off and erases the previous cruising speed.

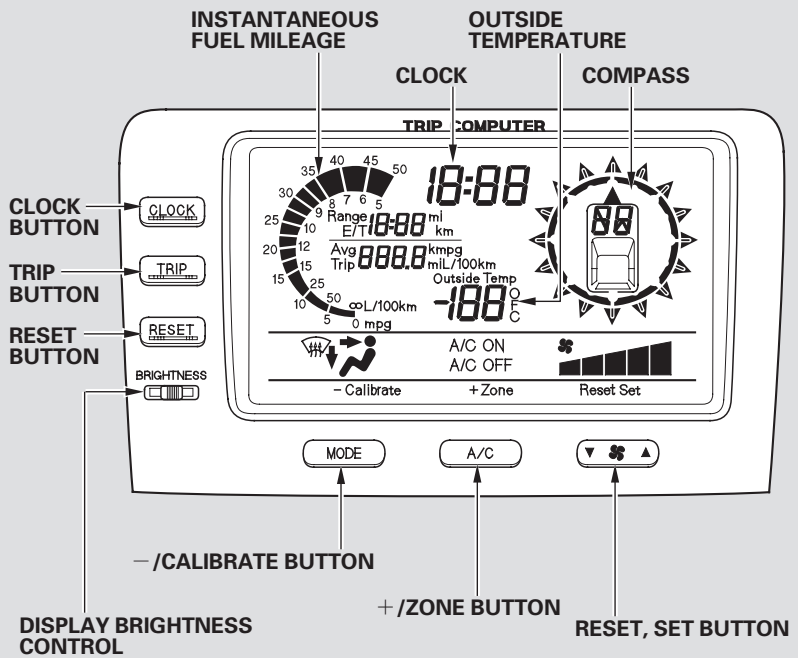
INSTANTANEOUS FUEL MILEAGE
OUTSIDE TEMPERATURE
CLOCK
COMPASS
TRIP COMPUTER
CLOCK BUTTON
TRIP BUTTON
RESET BUTTON
BRIGHTNESS
CLOCK
TRIP
RESET
Range
E/T
Avg
Trip
ml
km
kmpg
mL/100km
Outside Temp
L/100km
mpg
A/C ON
A/C OFF
– Calibrate
+Zone
Reset Set
MODE
A/C
–/CALIBRATE BUTTON
+/ZONE BUTTON
DISPLAY BRIGHTNESS CONTROL
RESET, SET BUTTON

Trip Computer

All models of MDX have a trip computer. To operate the trip computer on models with the navigation system, refer to the navigation manual.

(Without Navigation System)
The Trip Computer displays the following information.

- Clock
- Direction of travel
- Outside temperature

  The temperature sensor is located in the front bumper, and can be affected by heat from the road surface, engine heat, and the exhaust from the surrounding traffic. Because of these conditions, it may take a while for the temperature to read correctly.

- Instantaneous fuel mileage
- The Range, or estimated distance you can travel on the fuel remaining in the tank estimated from the fuel economy you have gotten over the last several miles (kilometers).
- The Avg display shows you the average fuel economy since you last reset the display.
- The E/T is the elapsed time that the ignition has been on. It automatically resets to 0.0 when it reaches twelve hours. This display can be reset at any time.
- The Trip display shows you the total distance you have driven since it was last reset.

  The display also has manual functions for the Climate Control System. Refer to page 106 .

Changing and Resetting the Display
Press the TRIP button to show either the range and Avg fuel economy, or the E/T and Trip odometer.

To reset the Avg fuel economy, E/T, and Trip odometer, press and hold the RESET button until you hear a beep.

Changing Units of Measurement
The outside temperature, fuel economy, range, and trip odometer can be displayed in either English or Metric units. To change between units, press the TRIP button and hold it for five seconds.

Setting the Clock

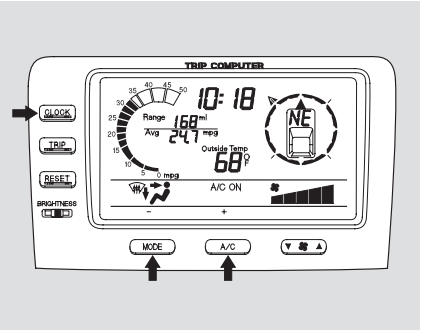

To set the clock:

1. Push the CLOCK button. The hours digits will start blinking. If you want to only set the minutes, go to step 4.
2. To change the hours to a lower number, press and hold the MODE button. To change the hours to a higher number, press and hold the A/C button.
3. When the hours reach the desired number, release the button.
4. To set the minutes, press the CLOCK button again. The minutes digits will start blinking.
5. Use the MODE or A/C button to set the minutes to the desired number.
6. Press the CLOCK button again. The clock will return to its normal display.

You can quickly set the time to the nearest hour. Press the CLOCK button, then press the RESET button. If the displayed time is before the half hour, it will reset back to the previous hour. If the displayed time is after the half hour, it will reset forward to the next hour.

For example:
1:06 will reset to 1:00
1:52 will reset to 2:00

Trip Computer

Compass Operation
Compass operation can be affected by driving near power lines or stations, across bridges, through tunnels, over railroad crossings, past large vehicles, or driving near large objects that can cause a magnetic disturbance. It can also be affected by accessories such as antennas and roof racks that are mounted by magnets.

Compass Calibration
If you see "— —" in the direction display and "Calibrate" is blinking, the compass is self-calibrating.
The compass may need to be manually calibrated after exposure to a strong magnetic field. If the compass seems to be continually showing the wrong direction and is not self-calibrating, do the following.

NOTE: Do this procedure in an open area, away from buildings, power lines, and other vehicles.

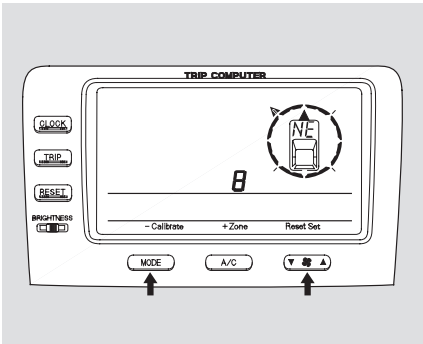

1. Press and hold the CLOCK and TRIP buttons until the display changes (about 1 second).

2. Press the Calibrate (MODE) button.

3. Press the Set (FAN) button. "Calibrate" will start blinking, and the direction display will change to "— —".

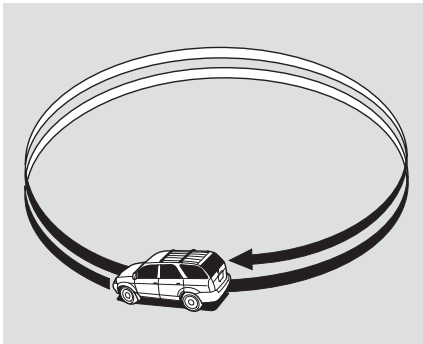

4. Drive the vehicle slowly in two complete circles.

5. When the display goes from "— —" to an actual heading, the unit is calibrated.

6. Press the CLOCK, TRIP, or RESET button to complete the calibration and return the display to normal.

Compass Zone Selection

In most areas, there is a variation between magnetic north and true north. Zone selection is required so the compass can compensate for this variation. To check and select the zone, do this:

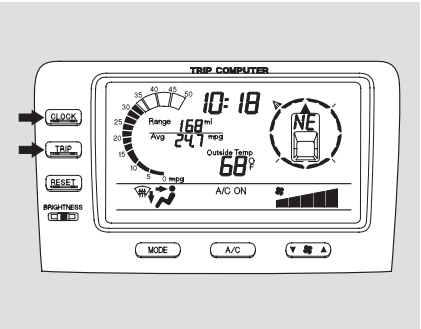

1. Press and hold the CLOCK and TRIP buttons until the display changes (about 1 second).

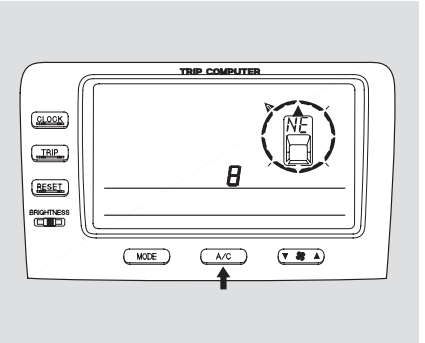

2. Press the Zone (A/C) button. The zone the compass is currently set to is displayed.

3. Find the zone for your area on the map.

4. If the zone is incorrect, press and hold the MODE button to get the number to count down, or the A/C button to get the number to count up. If the zone is correct, continue to step 5.

5. Press the Set (FAN) button to set the zone selection.

6. Press the CLOCK, TRIP or RESET button to exit the zone selection and return display to normal.

CONTINUED

Trip Computer

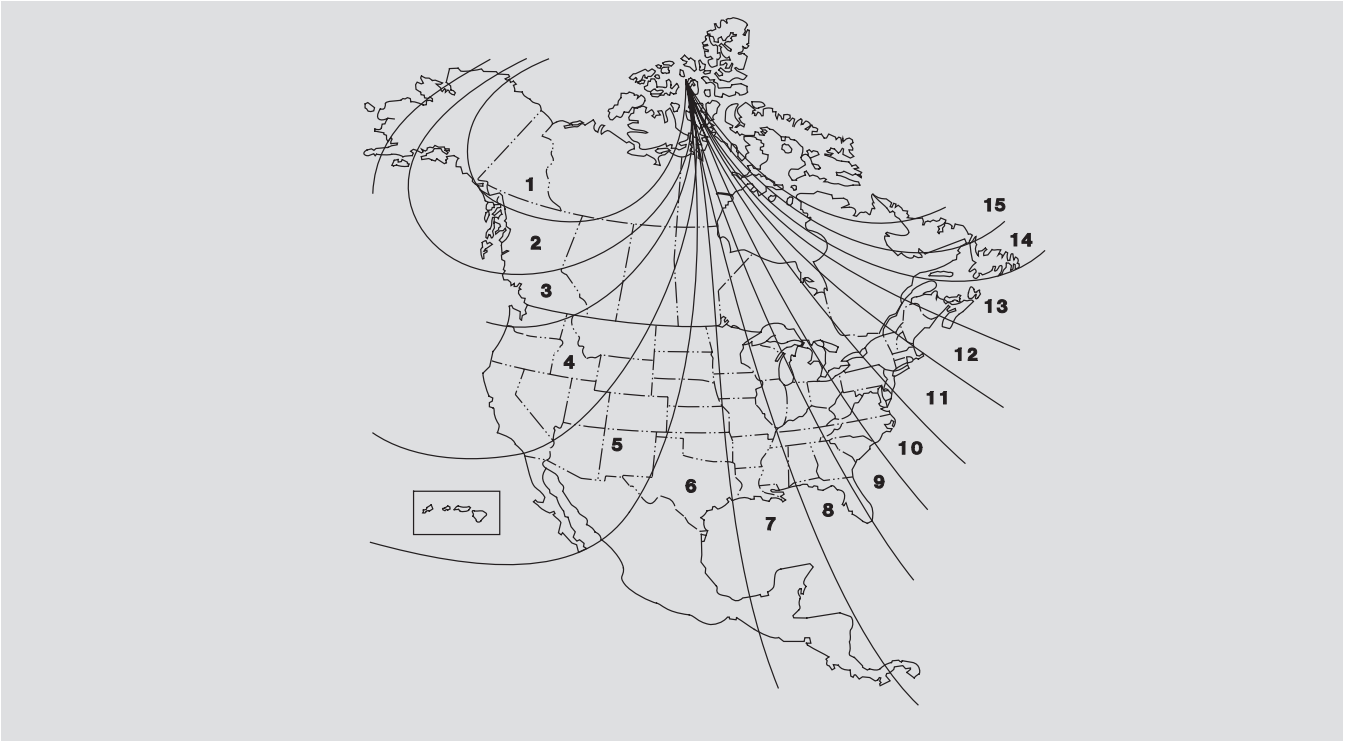

BRIGHTNESS control
The Brightness control has seven positions. In the middle five positions the display will dim when you turn on the parking lights or headlights.

Moving the control to the far left position turns off the display. It will come back on for several seconds if you press any of the buttons.
In the far right (maximum brightness) position, the display will not dim when you turn on the parking lights.

Cleaning the Display
Always use a soft cloth and mild glass/plastic cleaner (such as cleaners for computer monitor screens) to clean the display.

When you wipe the screen, some black lines may appear because of static electricity build-up. This is normal. They will disappear in 5 to 10 minutes.

Rear View Camera and Monitor
Navigation models

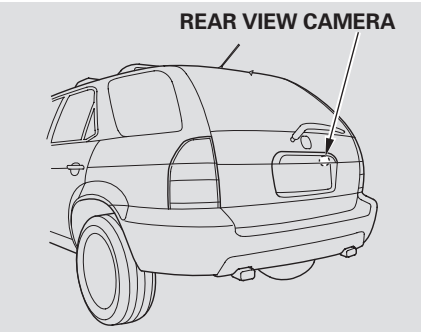

Whenever you shift to R (reverse) with the ignition switch in the ON (II) position, the rear view is shown on the navigation system screen.

For the best picture, always keep the rear view camera clean, and do not cover the camera lens.

When in reverse, the touch screen, and Navi "hard" buttons are locked out. Touching the ZOOM button allows you to adjust the brightness of the rear view camera image.

NOTE: The camera brightness cannot be adjusted by voice control.

Since the rear view camera display area is limited, you should always back up slowly and carefully, and look behind you for obstacles.

HomeLink Universal Transceiver

The HomeLink® universal transceiver built into your vehicle can be programmed to operate up to three remotely controlled devices around your home, such as garage doors, lighting, or home security systems.

General Information
If you are training HomeLink to operate a garage door or gate, you should unplug the motor for that device during training. Repeatedly pressing the remote control button could burn out the motor.

HomeLink stores the code in a permanent memory. There should be no need to retrain HomeLink if your vehicle's battery goes dead or is disconnected. If your garage door opener was manufactured before April 1982, you may not be able to program HomeLink to operate it. They do not have the safety feature that causes the motor to stop and reverse if an obstacle is detected during closing, increasing the risk of injury.

Important Safety Precautions
Always refer to the opening instructions and safety information that came with your garage door opener or other equipment you intend to operate with HomeLink. If you do not have this information, contact the manufacturer of the equipment.

For quick and accurate training, make sure the remote control transmitter for the device (garage door, automatic gate, security system, etc.) has a fresh battery.

Training HomeLink
Before you begin — If you just received your vehicle and have not trained any of the buttons in HomeLink before, you should erase any previously learned codes before training the first button. To do this, press and hold the two outside buttons on the HomeLink transceiver for about 20 seconds, until the red indicator flashes. Release the buttons, then proceed to step 1.

If you are training the second or third buttons, go directly to step 1.

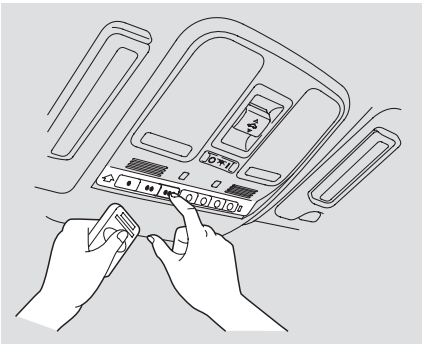

1. Unplug the garage door opener motor from the electrical outlet.

2. Hold the end of the garage door opener remote transmitter 2 to 5 inches from HomeLink. Make sure you are not blocking your view of the red indicator in HomeLink.

3. Press and hold the remote transmitter button and one of the HomeLink buttons at the same time.

   - If the red indicator in HomeLink begins to flash slowly at first, then rapidly, release both buttons, and go to step 5.
   - If the red indicator in HomeLink continues to flash slowly (does not flash rapidly), your remote transmitter may stop transmitting after a short time. Go to step 4.

4. Press and hold the remote transmitter button and one of the HomeLink buttons at the same time. While continuing to hold the HomeLink button, press and release the remote transmitter button every 2 seconds.
   - If the red indicator in HomeLink begins to flash slowly at first, then rapidly, release both buttons, and go to step 5.
   - If the red indicator in HomeLink continues to flash slowly (does not begin to flash rapidly), repeat steps 2 thru 4.

5. Plug in the garage door opener motor, then test the HomeLink button by pushing it for about 1 second.
   - If the button works, programming is complete.
   - If the button does not work go to step 6.

6. Push and hold the HomeLink button for a few seconds, then watch the red indicator on HomeLink.
   - If the indicator stays on or flashes slowly, repeat steps 2 thru 5.
   - If the indicator flashes rapidly for 2 seconds then stays on, you have a rolling code transmitter: Go to "Training with a Rolling Code System" (see page 158).

7. Repeat these steps to train the other two HomeLink buttons to operate any other compatible remotely controlled devices around your home (lighting, automatic gate, security system, etc.).

Training With a Rolling Code System

For security purposes, newer garage door opening systems use a "rolling" or variable code. Information from the remote control and the garage door opener are needed before HomeLink can operate the garage door opener.

The "Training HomeLink" procedure trains HomeLink to the proper garage door opener code. The following procedure synchronizes HomeLink to the garage door opener so it sends and receives the correct codes.

1. Make sure you have properly completed the "Training HomeLink" procedure.

2. Find the "training" button on your garage door opener unit. The location will vary, depending on the manufacturer.

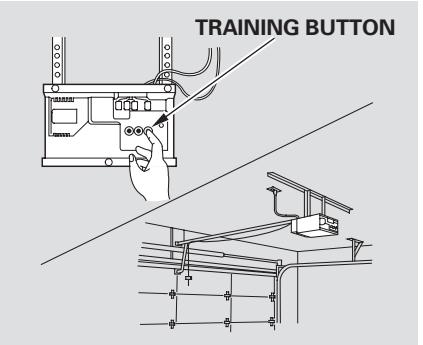

3. Press the training button on the garage door opener unit until the indicator next to the button comes on. The indicator may blink, or come on and stay on. You then have approximately 30 seconds to complete the following steps.

4. Press and hold the button on HomeLink for 3 to 4 seconds.

5. Press and hold the HomeLink button again for 3 to 4 seconds. This should turn off the training indicator on the garage door opener unit. (Some systems may require you to press the button up to three times.)

6. Press the HomeLink button again for about 1 second. It should operate the garage door.

Erasing Codes

To erase the codes stored in all three buttons, press and hold the two outside buttons until the red indicator begins to flash, then release the buttons.

You should erase all three codes before selling the vehicle.

Retraining a Button

If you want to retrain a programmed button for a new device, you do not have to erase all button memory. You can replace the existing memory code using this procedure:

1. Press and hold the HomeLink button to be trained until the HomeLink indicator begins to flash slowly.
   - If a rolling code transmitter was previously programmed, the indicator will flash rapidly for 2 seconds, and then stay on for about 23 seconds.
   - If a standard transmitter was programmed, the indicator will stay on for about 25 seconds.

2. Once the HomeLink indicator begins to flash slowly, continue to hold the HomeLink button, and follow steps 3 thru 6 under "Training HomeLink" (see page 156).

HomeLink Universal Transceiver

Customer Assistance
If you have problems with training the HomeLink Universal Transceiver, or would like information on home products that can be operated by HomeLink, call (800) 355-3515. On the Internet, go to www.homelink.com.

HomeLink® is a registered trademark of Johnson Controls, Inc.

As required by the FCC:
This device complies with Part 15 of the FCC rules. Operation is subject to the following two conditions: (1) This device may not cause harmful interference, and (2) this device must accept any interference received, including interference that may cause undesired operation.

Changes or modifications not expressly approved by the party responsible for compliance could void the user's authority to operate the equipment.

This device complies with Industry Canada Standard RSS-210.
Operation is subject to the following two conditions: (1) this device may not cause interference, and (2) this device must accept any interference that may cause undesired operation of the device.

Your vehicle is equipped with the HandsFreeLink (HFL). HFL uses Bluetooth technology as a wireless link between it and your Bluetooth compatible cell phone. When you are in your vehicle and your phone is linked to the HFL, you'll enjoy safe, hands-free phone use. The HFL is available only in English.

Here are the main features of the HFL. Instructions for using the HFL begin on page 163 .

Voice Control
HFL recognizes simple voice commands, such as phone numbers and names. It uses these commands to automatically dial, receive, and store numbers. For more information on voice control, see Using Voice Control on page 163 .

Bluetooth® Wireless Technology
Bluetooth® is a registered trademark of Blootooth SIG, Inc.
Bluetooth is the wireless technology that links your phone to the HFL. The HFL uses a Class 3 Bluetooth, which means the maximum range between your phone and vehicle is 30 feet (10 meters).

To use the HFL, your phone must have approved Bluetooth capability along with the Hands Free Profile. This type of phone is available through many phone makers and cellular carriers. You can also find an approved phone by visiting *www.acura.com/handsfreelink. (*In *Canada, visit www.acura.ca.) or by calling the Hands Free Link customer support at (888)528-7876.*

Incoming/Outgoing Calls
With a linked phone, the HFL allows you to send and receive calls in your vehicle without holding the phone.

Phonebook
The HFL can store up to 50 names and phone numbers in its phonebook. With a linked phone, you can then automatically dial any name or number in the phonebook.
Here are the main components of the HFL system:

Microphone
The HFL microphone is on the ceiling, between the front map lights and the console buttons. On models with navigation system, the microphone is shared with the navigation system.

Audio System
When the HFL is in use, the sound comes through the vehicle's front audio system speakers. If the audio system is in use while making a call, the HFL over-rides the audio system. To change the volume level, use the audio system volume knob.

CONTINUED

HandsFreeLink™

Touring model with Navigation System
HFL Buttons

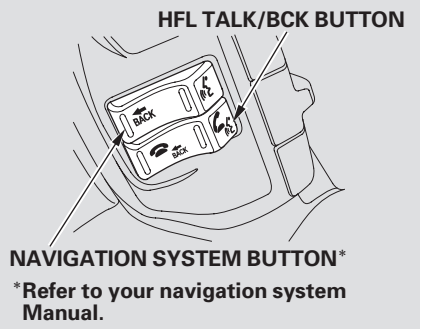

To operate the HFL, use the HFL TALK/BACK button on the left side of the steering wheel.

Touring model without Navigation System

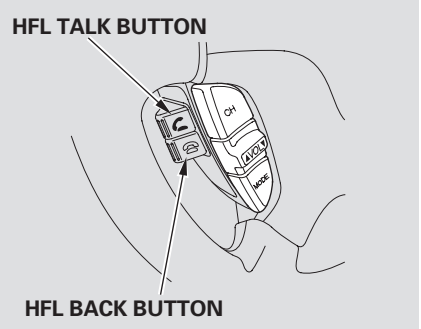

Here is the function of each HFL button:
HFL Talk: This button is used before you give a command, to answer incoming calls, and to confirm system information.
HFL Back: This button is used to end a call, go back to the previous voice control command, and to cancel an operation.

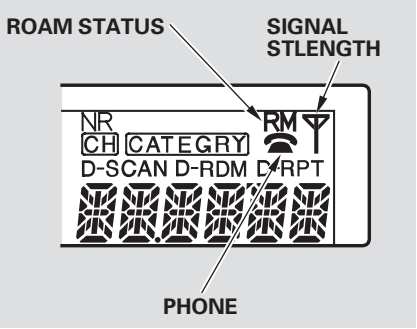

This information is displayed whether or not the phone is being used:

- Phone — Indicates a phone is currently linked to the HFL.

- Signal Strength* — Indicates the network signal strength.
- ROAM Status* (models without navigation system) — Indicates your phone is roaming.

* : Some phones will not send this information to the HFL.

How to Use the HFL
The HFL is operated by the HFL TALK/BACK button on the left side of the steering wheel. The next few pages provide easy-to-use instructions for all basic features of the HFL.

NOTE: All phones may not operate identically, and some may cause inconsistent operation of the HFL.

Using Voice Control
Here are some guidelines for using voice control:

- To enter a command, press the top of the TALK/BACK button. Then, after the beep, say your command in a clear, natural tone.
- For best system operation, set the climate control fan speed to low, and direct the center vents away from the microphone in the ceiling.
- If the HFL does not recognize a command, its response is, "Pardon." If it doesn't recognize the command a second time, its response is, "Please repeat." If it doesn't recognize the command a third time, it plays the Help prompt.
- To hear a list of available options at any time, press the top of the TALK/BACK button, wait for the beep, and say, "Hands free link help."
- Many commands can be spoken together. For example, you can say, "Dial 123-456-7891."
- To enter a string of numbers in a Call or Dial command, you can say them all at once, or you can separate them in blocks of 3, 4, 7, 10, and 11.
- To skip a voice prompt, press the Talk button while the HFL is speaking. The HFL will then begin listening for your next command.

CONTINUED

- To go back one step in a command process, say, "Go back," or press the Back button.
  If nothing is said while the HFL is listening for a command, the HFL will time out and stop its voice recognition. The next time you press the top of the TALK/BACK button, the HFL begins listening from the point at which it timed out.

- To end a command sequence at any time, press and hold the Back button, or press the Talk button, wait for the beep, and say, "Cancel." The next time you press the Talk button, the HFL begins from its main menu.

- When you finish a command sequence, the HFL goes back to its main menu. For example, when you store the name, "Eric," the HFL response is, "Eric has been stored." The next time you press the Talk button, you will be at the main menu.

Setting Your Passcode
The HFL will accept a numeric, four-digit passcode that you can use for security purposes.

To set your passcode, do this:

1. With the ignition in the ON (II) position, press and release the top of the TALK/BACK button on the steering wheel. After the beep, say "System." The HFL response is "System options are lock, unlock, and set passcode."

2. Press and release the top of the TALK/BACK button. After the beep, say "Set passcode."

3. The HFL response is "What is the new four-digit passcode?" (If you are changing the passcode, you will first be asked for the current passcode.)

4. Press and release the top of the TALK/BACK button. After the beep, say the four-digit passcode you want to use. For example, say "1, 2, 3, 4." The HFL response is "1, 2, 3, 4. Is this correct?"

5. Press and release the top of the TALK/BACK button. After the beep, say "Yes." The HFL response is "The new passcode has been stored. Returning to the main menu."

Locking or Unlocking the HFL
Once a passcode is set, you can lock the HFL so it only operates after the passcode is entered, or you can unlock it so anyone using your vehicle can also use the HFL.

To lock or unlock the HFL, do this:

1. Press and release the top of the TALK/BACK button. After the beep, say "Security." The HFL response is "Security options are lock, unlock, and set passcode."

2. Press and release the top of the TALK/BACK button. After the beep, say "Lock" or "Unlock." Lock means the HFL will prompt you for your passcode each time the ignition switch is turned to the ON (II) position and you press the Talk button. You will only be asked for the passcode once per ignition cycle. If the HFL is locked, its response is "System is locked. Each time the vehicle is turned on, the passcode will be required to use the system." If the HFL is unlocked, its response is "The system is unlocked. Returning to the main menu."

Setting Up the System

The voice of the HFL can be set to male or female (U.S. models only). Also, the incoming notification can be set to a ring tone, a prompt, or no notification.

To set up the system, do this:

1. Press and release the top of the TALK/BACK button. After the beep, say "System." The HFL response is, "System options are setup and clear."

2. Press and release the top of the TALK/BACK button. After the beep, say "Setup." The HFL response is "Would you like male or female prompts?"

3. Press and release the top of the TALK/BACK button. After the beep, say "Male" or "Female," depending on the system voice you want. The HFL response is, "Male (Female) prompts have been selected. Would you like an audible notification of an incoming call?"

4. Press and release the top of the TALK/BACK button. If you say "Yes" after the beep, the HFL response is, "Would you like a ring tone or a prompt?" If you say "No" after the beep, the HFL returns to its main menu. Saying "No" will result in no ring tone or prompt playback during an incoming call. The audio system will still mute, and a message will be displayed.

5. Press and release the top of the TALK/BACK button. After the beep, say "Ring tone" or "Prompt." If you choose "Ring tone" you will hear a ring tone through the audio speakers to announce an incoming call. If you choose "Prompt," you will hear this message to announce an incoming call: "You have an incoming call."

Pairing Your Phone
Your Bluetooth compatible phone with HandsFree Profile must be paired to the HFL before you can make and receive hands-free call.

NOTE:
- HFL does not allow you to pair your phone if the vehicle is moving.
- For pairing, your phone must be in its Discovery mode.
- Up to six phones can be paired to the HFL.
- The following procedure works for most phones. If you cannot pair your phone to the HFL with this procedure, refer to your phone's operating manual, or talk to your phone retailer.
- During the pairing process, turn off any previously paired phones before pairing a new phone.

1. With your phone on and the ignition in the ACCESSORY (I) or ON (II) position, press and release the Talk button. After the beep, say "Phone set up." The HFL response is "Phone set up options are status, pair, edit, delete, and list."

2. Press and release the top of the TALK/BACK button. After the beep, say "Pair." The HFL response is "The pairing process requires operation of your mobile phone. For safety, only perform this function while the vehicle is stopped. State a four-digit code for pairing. Note this code. It will be requested by the phone."

3. Press and release the top of the TALK/BACK button. After the beep, say the four-digit code you want to use. For example, say "1, 2, 3, 4." The HFL response is, "1, 2, 3, 4. Is this correct?"

4. Press and release the top of the TALK/BACK button. After the beep, say "Enter." The HFL response is "Searching for a Bluetooth phone."

NOTE: Steps 5 and 6 show a common way to get your phone into its Discovery mode. If these steps do not work on your phone, refer to the phone's operating manual.

5. Follow the prompts on your phone to get it into its Search mode. The phone will search for the HFL. When it comes up, select HandsFreeLink from the list of options displayed on your phone.

6. When asked by the phone, enter the four-digit code from step 3 into your phone. The HFL response is "A new phone has been found. What would you like to name this phone?"

7. Press and release the top of the TALK/BACK button. After the beep, say the name you want to use. For example, say "Eric's phone." The HFL response is "Eric's phone has been successfully paired. Returning to the main menu."

8. If you want to pair another phone, repeat steps 1 through 7.

To rename a paired phone, do this:

1. Press and release the top of the TALK/BACK button. After the beep, say "Phone setup." The HFL response is "Phone setup options are status, pair, edit, delete, and list."
2. Press and release the top of the TALK/BACK button. After the beep, say "Edit." The HFL response is "Which phone would you like to edit?"
3. Press and release the top of the TALK/BACK button. After the beep, say the name of the phone you want to rename. For example, say "Eric's phone." The HFL response is "What is the new name for Eric's phone?"
4. Press and release the top of the TALK/BACK button. After the beep, say the new name of the phone. For example, say "Lisa's phone." The HFL response is, "The name has been changed. Returning to the main menu."

To delete a paired phone, do this:

1. Press and release the top of the TALK/BACK button. After the beep, say "Phone setup." The HFL response is, "Phone setup options are status, pair, edit, delete, and list."
2. Press and release the top of the TALK/BACK button. After the beep, say "Delete." The HFL response is, "Which phone would you like to delete?"
3. Press and release the top of the TALK/BACK button. After the beep, say the name of the phone you want to delete. For example say "Eric's phone." The HFL response is "Would you like to delete Eric's phone?"
4. Press and release the top of the TALK/BACK button. After the beep, say "Yes." The HFL response is "Preparing to delete Eric's phone." Say "OK" to continue. Otherwise, say "Go back," or "Cancel."
5. Press and release the top of the TALK/BACK button. If you say "OK" after the beep, the HFL response is "The phone has been deleted. Returning to the main menu." If you say "Go back," or "Cancel," the phone will not be deleted.

CONTINUED

To list all paired phones, do this:

1. Press and release the top of the TALK/BACK button. After the beep, say "Phone setup." The HFL response is "Phone setup options are status, pair, edit, delete, and list."

2. Press and release the top of the TALK/BACK button. After the beep, say "List." The HFL responds by listing the name of each paired phone. When all phones paired to the system have been read, the HFL response is "The entire list has been read. Returning to the main menu."

To find out the status of the phone being used, do this:

1. Press and release the top of the TALK/BACK button. After the beep, say "Phone setup." The HFL response is "Phone setup options are status, pair, edit, delete, and list."

2. Press and release the top of the TALK/BACK button. After the beep, say "Status." An example of the HFL response is, "Eric's phone is linked. Battery strength is three bars. Signal strength is five bars, and the phone is roaming. Returning to the main menu."

To change from the currently linked phone to another paired phone, do this:

1. Press and release the top of the TALK/BACK button. After the beep, say "Next phone." The HFL response is "Searching for the next phone." The HFL then disconnects the linked phone and searches for another paired phone. If no other phones are found, the first phone remains linked.

Making a Call
You can make calls using any phone number, or by using a name in the HFL phonebook. You can also redial the last number called. During a call, the HFL allows you to talk up to 30 minutes after you remove the key from the ignition switch.

To make a call using a phone number, do this:

1. With your phone on and the ignition in the ACCESSORY (I) or ON (II) position, press and release the top of the TALK/BACK button. After the beep, say "Call" or "Dial." The HFL response is, "What name or number would you like to call/dial?"
2. Press and release the top of the TALK/BACK button. After the beep, say the number you want to call. For example, say "123 456 7891." The HFL response is "123 456 7891. Say call, dial, or continue to add numbers."
3. Press and release the top of the TALK/BACK button. After the beep, say "Call" or "Dial." The HFL response is "Calling" or "Dialing." Once connected, you will hear the person you called through the audio speakers. To change the volume, use the audio system volume knob.
4. To end the call, press the bottom of the TALK/BACK button.

To make a call using a name in the HFL phonebook, do this:

1. With your phone on and the ignition in the ACCESSORY (I) or ON (II) position, press and release the top of the TALK/BACK button. After the beep, say "Call" or "Dial." The HFL response is "What name or number would you like to call/dial?"
2. Press and release the top of the TALK/BACK button. After the beep, say the name you want to call. For example, say "Eric." The HFL response is "Would you like to call Eric?"

CONTINUED

3. Press and release the Talk button. After the beep, say "Yes." The top of the TALK/BACK response is "Calling" or "Dialing." Once connected, you will hear the person you called through the audio speakers. To change the volume, use the audio system volume knob.

4. To end the call, press the bottom of the TALK/BACK button.

To redial the last number called by the phone, press and release the top of the TALK/BACK button. After the beep, say "Redial." The HFL response is, "Redialing." Once connected, you will hear the person you called through the audio speakers. To change the volume, use the audio system volume knob.

Sending Numbers or Names During a Call

The HFL allow you to send numbers or names during a call. This is useful when you call a menu-driven phone system. You can also program account numbers into the HFL phonebook for easy retrieval during menu-driven calls.

To send a number during a call, do this:

1. Press and release the top of the TALK/BACK button. After the beep, say "Send." The HFL response is, "What name or number would you like to send?"

2. Press and release the top of the TALK/BACK button. After the beep, say the number you want to send. For example, say "1, 2, 3." The HFL response is "1, 2, 3. Say send, or continue to add numbers."

3. Press and release the top of the TALK/BACK button. After the beep, say "Send." The dial tones will be sent, and the call will continue.

To send a name during a call, do this:

1. Press and release the top of the TALK/BACK button. After the beep, say "Send." The HFL response is "What name or number would you like to send?"

2. Press and release the top of the TALK/BACK button. After the beep, say the name you want to send. For example, say "Account number." The HFL response is "Would you like to send account number?"

3. Press and release the top of the TALK/BACK button. After the beep, say "Send." The dial tones will be sent, and the call will continue.

Receiving a Call
If you receive a call when you are not on the phone, the HFL interrupts the audio system (if it is on), and plays the incoming call notification, if activated. To answer the call, press the top of the TALK/BACK button and begin speaking. If you don't want to answer the call, press the Back button.

If your phone has Call Waiting, and you receive a call when you are on the phone, press the Talk button to answer it. When you do this, the original call is placed on hold. To return to the original call, press the top of the TALK/BACK button again. If you don't want to answer the new call, disregard it, and continue with your original call. If you want to hang up the original call and answer the new call, press the bottom of the TALK/BACK button.

Transferring a Call
During a call, you can transfer it from the HFL to your phone, or from your phone to the HFL.

To transfer a call from the HFL to your phone, do this:
Press and release the top of the TALK/BACK button. After the beep, say "Transfer." The audio switches from the HFL to the phone.

To transfer a call from your phone to the HFL, do this:
Press and release the top of the TALK/BACK button. After the beep, say "Transfer." The audio switches from your phone to the HFL.

Muting a Call
During a call, you can mute or unmute your voice to the person you are talking to.

To mute your voice, do this:
1. Press and release the top of the TALK/BACK button. After the beep, say "Mute." The HFL response is, "Mute is active."

To unmute your voice, do this:
2. Press and release the top of the TALK/BACK button. After the beep, say "Mute." The HFL response is, "Mute is cancelled."

Setting up the Phonebook
The HFL phonebook can store up to 50 names with their associated numbers. These can be any types of numbers. For example, you can store a phone number and use it to make a call, or you can store an account number and use it during a call to a menu-driven phone system.

To add a name, do this:

1. Press and release the top of the TALK/BACK button. After the beep, say "Phonebook." The HFL response is "Phonebook options are store, edit, delete, and list."

2. Press and release the top of the TALK/BACK button. After the beep, say "Store." The HFL response is, "What name would you like to store?"

3. Press and release the top of the TALK/BACK button. After the beep, say the name you would like to store. For example, say "Eric" or say "account number." The HFL response is "What is the number for Eric," or "What is the number for account number?"

4. Press and release the top of the TALK/BACK button. After the beep, say the number. For example, say "123 456 7891." The HFL response is "123 456 7891."

5. Press and release the top of the TALK/BACK button. After the beep, say "Enter." The HFL response is "Eric (or account number) has been stored. Returning to the main menu."

To edit the number of a name, do this:

1. Press and release the top of the TALK/BACK button. After the beep, say "Phonebook." The HFL response is "Phonebook options are store, edit, delete, and list."

2. Press and release the top of the TALK/BACK button. After the beep, say "Edit." The HFL response is, "What name would you like to edit?"

3. Press and release the top of the TALK/BACK button. After the beep, say the name you would like to edit. For example, say "Eric." The HFL response is "What is the new number for Eric?"

4. Press and release the top of the TALK/BACK button. After the beep, say the new number for Eric. For example, say "987 654 3219." The HFL response is, "987 654 3219."

5. Press and release the top of the TALK/BACK button. After the beep, say "Enter." The HFL response is "The number has been changed. Returning to the main menu."

To delete a name, do this:

1. Press and release the top of the TALK/BACK button. After the beep, say "Phonebook." The HFL response is, "Phonebook options are store, edit, delete, and list."

2. Press and release the top of the TALK/BACK button. After the beep, say "Delete." The HFL response is, "What name would you like to delete?"

3. Press and release the top of the TALK/BACK button. After the beep, say the name you would like to delete. For example, say "Eric." The HFL response is "Do you want to delete Eric?"

4. Press and release the top of the TALK/BACK button. After the beep, say "Yes." The HFL response is, "The name has been deleted. Returning to the main menu."

To list all names in the phonebook, do this:

1. Press and release the top of the TALK/BACK button. After the beep, say "Phonebook." The HFL response is, "The Phonebook options are store, edit, delete, and list."

2. Press and release the top of the TALK/BACK button. After the beep, say "List." The HFL responds by listing the names in the phonebook. When the end of the list is reached, the HFL response is, "The entire list has been read. Returning to the main menu."

To call a name from the phonebook list, do this:

1. Press and release the top of the TALK/BACK button. After the beep, say "Phonebook." The HFL response is "Phonebook options are store, edit, delete, and list."

2. Press and release the top of the TALK/BACK button. After the beep, say "List." The HFL responds by listing the names in the phonebook. When it says the name you want to call, for example, Eric, press the top of the TALK/BACK button, and then say "Call." The HFL response is, "Would you like to call Eric?"

CONTINUED

3. Press and release the top of the TALK/BACK button. After the beep, say "Yes." The HFL response is "Calling." Once connected, you will hear the person you called through the audio speakers. To change the volume, use the audio system volume knob.

Clearing the System

This operation clears the HFL of your passcode, your paired phones, and all names in the HFL phonebook. Clearing is recommended before you sell your vehicle.

To clear the system, do this:

1. Press and release the top of the TALK/BACK button. After the beep, say "System." The HFL response is, "System options are setup and clear."

2. Press and release the top of the TALK/BACK button. After the beep, say "Clear." The HFL response is, "This process will clear all paired phones, clear all entries in the phonebook, and clear the passcode. Is this what you would like to do?"

3. Press and release the top of the TALK/BACK button. After the beep, say "Yes." The HFL response is "Preparing to clear all paired phones, all phonebook entries, and the passcode. This may take up to 2 minutes to complete." Press and release the top of the TALK/BACK button. After the beep, say "OK" to proceed, or say "Go back" or "Cancel."

4. If you said "OK," after a short period of time, the HFL response is, "System has been cleared. Returning to the main menu."

U.S. Touring model with Navigation System

The OnStar® system in your vehicle gives you access to a wide range of services and information with the touch of a button. An OnStar advisor is available 24 hours a day, 7 days a week.

The Safe and Sound Plan provides these features:

- Roadside Assistance
- Emergency Services
- Automatic Notification of Airbag Deployment
- Accident Assist
- Remote Door Locking/Unlocking
- Stolen Vehicle Tracking
- Misplaced Vehicle Assistance
- Online Concierge Services.

The Directions and Connections Plan provides these additional features:

- Route Support
- Ride Assist
- Information and Convenience Services

The Luxury and Leisure Plan adds personal concierge services.

OnStar Control Panel

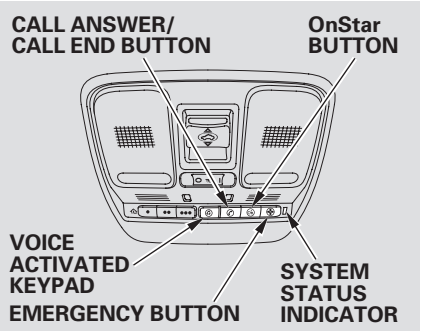

The OnStar buttons and indicator are located on the ceiling near the front map lights.

OnStar

OnStar Services Button

Press this button to contact an OnStar advisor. You will hear a chime, followed by the announcement, "Connecting to OnStar." The connection should take 20 to 30 seconds. The advisor will assist you with any of the services included in your plan.

Depending on what service you request, you may need to give your Personal Identification Number (PIN) to the advisor. Your PIN is a number you make up and provide when you establish your OnStar service.

If cellular telephone service is not available in the area you are driving in, you will hear a fast busy signal. The system will retry the connection several times before returning to the ready mode.

To cancel these retries, press the white phone button.

A microphone is located on the ceiling, between the front map lights and the console buttons you can speak to the advisor without taking your hands off the steering wheel or diverting your attention from the road. The OnStar advisor's voice comes from the audio system's speakers. Use the volume control on the audio system or on the steering wheel to adjust the volume.

Recording an Advisor or Virtual Advisor Message

You can record up to 5 minutes of information from your OnStar Advisor or the Virtual Advisor. This is helpful for reviewing the route, hotel, or restaurant information you receive from the OnStar center.

To record a message:

- During your call, the Advisor or Virtual Advisor, press and release the OnStar button. The system beeps to indicate that it is recording.
- When you are finished recording, press and release the OnStar button again. The system beeps and stops recording.

To hear the first playback of a message:

- Press the CALL ANSWER/CALL END button. The system responds with "OnStar replay."
- Say "Advisor playback." The recorded message is played through the audio system speakers.
- When you are finished listening, press the CALL ANSWER/CALL END button. The system responds with "Goodbye."

To hear a message again:
- Press the CALL ANSWER/CALL END button. The system responds with “OnStar ready.”
- Say “Advisor playback.” The system responds with “Play or Resume.”
- If you say “Play,” the message plays from the beginning. If you say “Resume,” the message plays from the point you previously stopped it.

Recording a new message will delete the previous message.

Emergency Button

Press this button to contact an OnStar advisor only if you have an emergency situation. You will hear a tone, followed by the announcement, “Connecting to OnStar Emergency.” Your call is given highest priority.

The advisor will ask about the nature of the emergency, locate your vehicle, and notify the appropriate emergency service agencies.

Call Answer/Call End Button

Press this CALL ANSWER/CALL END button to end a call to the OnStar advisor. If the OnStar center calls you, press this button to answer the call.

This button is also used to initiate the Personal Calling and Virtual Advisor services, if you have subscribed.

Voice Activated Keypad

Press the “phone #” button to send dial tones (example — automated phone systems) while in an OnStar personal call.

System Status Indicator
This indicator shows you the status of the system.

Solid Green — The system is ready for use.

Blinking Green — A call is in progress.

Solid Red — There is a problem with the system. Press the OnStar button to contact an advisor. If the call connects, the advisor will assist you with verifying the system's operation. If you are not able to contact an advisor, take your vehicle to an Acura dealer to have the system diagnosed.

Blinking Red — There is a problem with the system while a call is in progress.

Safe and Sound Plan Features
The OnStar system uses the global positioning system (GPS) to locate your vehicle whenever you place a call. This allows the advisor to quickly contact the nearest services without requiring you to provide detailed directions.

Roadside Assistance — Contact the OnStar advisor if you need assistance with a problem (flat tire, out of fuel, etc.) while traveling. The advisor will contact an appropriate agency to come and assist you.

Emergency Services — Contact an OnStar advisor if you have an emergency situation. The advisor will contact the nearest emergency services provider (ambulance, fire department, etc.) and advise them of your situation.

Automatic Notification of Airbag Deployment — If you are ever in an accident that causes the airbags to deploy, the OnStar system automatically places a call (provided the OnStar system and your vehicle's electrical system are still intact). The advisor will attempt to speak to you to evaluate the situation, and contact the nearest emergency services provider.

Accident Assist — The OnStar advisor can help you if you are ever in a minor accident by asking you for information about the accident. Complete, detailed information will make it easier to complete accident reports and insurance claims.

Remote Door Locking/Unlocking — By sending a signal to your vehicle, the advisor can lock or unlock your vehicle's doors. This is helpful if you are away from your vehicle and realize you forgot to lock the doors, or if you have locked the keys in your vehicle. To get OnStar's assistance, call (888) 4-ONSTAR (466-7827).

Stolen Vehicle Tracking — Using GPS, OnStar can locate your vehicle almost anywhere. If your vehicle is ever stolen, contact OnStar at (888) 4-ONSTAR. The advisor will put you in contact with the proper authorities, and assist them with locating your vehicle.

Misplaced Vehicle Assistance — If you are unable to locate your vehicle in a large parking lot or parking structure, contact OnStar at (888) 4-ONSTAR. The advisor will remotely activate the exterior lights and the horn, allowing you to locate your vehicle.

Online Concierge Services — From your computer, you can log into www. myonstar.com to make dinner reservations, purchase tickets to events, send flowers, etc.

Directions and Connections Plan Features
The Directions and Connections Plan provides these additional features.

Route Support — The OnStar advisor can give you verbal directions from your current location to a desired destination.

Ride Assist — If you need a ride (taxi, limousine service, etc.) the OnStar advisor can make the arrangements for you. Use the OnStar button, or call (888) 4-ONSTAR.

Information and Convenience Services — The OnStar advisor can give you information on nearby hotels, restaurants, ATMs, hospitals, gas stations, and many other services in any area you are traveling in. The advisor can also help you with hotel or restaurant reservations.

Luxury and Leisure Plan Features
The Luxury and Leisure plan provides all the benefits of the other plans, and adds:

Personal Concierge Services — An OnStar advisor can assist you with purchasing theater tickets, airline tickets, rental car reservations for a vacation, and just about any other purchase you desire.

Personal Calling
The OnStar Personal Calling plan is an extra-cost option that gives you the ability to use your vehicle's OnStar system as a hands-free cellular telephone.

To sign up for Personal Calling, press the OnStar button in your vehicle, and notify the advisor that you'd like to sign up. The advisor will get all the information needed to set up your account, and provide you with your new cellular telephone number.
You will need to provide a credit card number, and prepurchase "units" or minutes of air time (one unit equals 1 minute).

Placing a Telephone Call — You must use voice commands to give the OnStar system your calling information. To make a phone call:

- Press the CALL ANSWER/CALL END button.
- OnStar will respond with "OnStar ready."
- Say "Dial."
- OnStar will respond with "Phone number to dial, please."
- Say the entire number without pausing.
- OnStar will repeat the number, and then say "Yes or No."
- Say "Yes" to dial the number, or "No" to try again.
- OnStar will respond with "Dialing."
- When you have finished your conversation, press the white phone button again to hang up.

If you make a mistake speaking the phone number, or the system responds with the wrong number, say “Clear.” This will cause the system to erase the number.

If you need to cancel the phone call attempt before entering the complete phone number, say “Cancel.” The system will cancel the operation and return to Ready.

You can also enter the number one digit at a time. To make a phone call:

- Press the CALL ANSWER/CALL END button.
- OnStar will respond with “OnStar ready.”
- Say “Digit dial.”
- OnStar will respond with “First digit to dial, please.”
- Say the first digit of the number.
- OnStar will repeat that digit. Always wait for OnStar to confirm the digit before going to the next digit.
- Say the second digit of the number.
- OnStar will repeat that digit.
- Continue this until you have given OnStar the complete telephone number. Then say “Dial.”
- OnStar will respond with “Dialing.” It will then place the telephone call.
- When you have finished your conversation, press the CALL ANSWER/CALL END button again to hang up.

If you make a mistake speaking a digit of the phone number, or the system responds with the wrong digit, say “Clear.” This will cause the system to erase the last digit.

If you need to cancel the phone call attempt before entering the complete phone number, say “Cancel.” The system will cancel the operation and return to Ready.

CONTINUED

If the system has difficulty understanding a voice command, it can respond with:

"Pardon" — The system could not match your voice command to one it knows. Repeat the command distinctly.

"Slower please" — The system missed the command because it was not ready for it, or there was too much background noise. Repeat the command after a short pause.

Voice Activated Key-Pad — You can send dial tones during OnStar Personal Calling.

- While in a personal call, press the Voice Activated Key-Pad Button. OnStar will respond with "First digit to send please."
- Say the first digit of the number you want to send.
- OnStar will repeat that digit. Always wait for OnStar to confirm the digit before going to the next digit.
- OnStar will repeat that digit.
- Say the second digit of the number.
- Continue this until you have given OnStar the complete number. Then say "Send." OnStar will send the number by dial tones.

Incoming Telephone Calls — When someone places a telephone call to you, the audio system will mute and you will hear the ring. Press the white phone button to answer the call. When you have completed the call, press the white phone button again to hang up.

Using Name Tags
The OnStar system can store up to twenty 32-digit telephone numbers in its memory. When you store these numbers in its memory, you give each one a name tag. When you want to place a telephone call, you can recall the number by giving the system the name tag.

Storing a Name Tag — To store a telephone number and its name tag in the system:

- Press the CALL ANSWER/CALL END button.
- OnStar will respond with "Ready."
- Say "Store."
- OnStar will respond with "Phone number to store, please."
- Say the entire number.
- OnStar will repeat the number, and then say "Yes or No."
- Say "Yes," or say "No" to try again.
- OnStar will respond with "Name tag, please."
- Say the name that you want assigned to that telephone number.

You can also store a telephone number and its name tag one digit at a time. To store them in the system:

- Press the VOICE ACTIVATED KEYPAD button.
- OnStar will respond with “OnStar ready.”
- Say “Digit store.”
- OnStar will respond with “First digit to store, please.”
- Say the first digit of the number.
- OnStar will repeat that digit.
- Say the second digit of the number.
- Continue this until you have given OnStar the complete telephone number. Then say “Store” again.
- OnStar will respond with “Name tag, please.”
- Say “New name tag.”
- OnStar will respond with “Store <new name tag>, Yes or No.”
- Say “Yes.”
- OnStar will respond with “Storing <new name tag>.”

Placing a Telephone Call — To place a telephone call using a name tag:

- Press the CALL ANSWER/CALL END button.
- OnStar will respond with “Ready.”
- Say “Call.”
- OnStar will respond with “Name tag, please.”
- Say the name tag for the number you want to call.
- OnStar will respond with “Calling <name tag>,” then place the telephone call.

If you have forgotten what name tags you have stored, the system will read them to you. Press the CALL ANSWER/CALL END button. When the system responds with “Ready,” say “Directory.”

Deleting a Name tag — To delete a name tag and telephone number from memory:

- Press the CALL ANSWER/CALL END button.
- OnStar will respond with “Ready.”
- Say “Delete.”
- OnStar will respond with “Name tag, please.”
- Say the name tag for the number you want to delete.
- OnStar will respond with “Delete <name tag>, yes or no.”
- Say “Yes.”
- OnStar will respond with “Deleting <name tag>.”

CONTINUED

Redialing a Number — To redial the last telephone number you called:
- Press the CALL ANSWER/CALL END button.
- OnStar will respond with "Ready."
- Say "Redial."
- OnStar will respond with "Redialing," then place the telephone call.

Security Code
By giving the system a security code that you make up, you can lock out the Personal Calling and Virtual Advisor capabilities of the system so unauthorized people cannot make telephone calls. To turn security on or off:
- Press the white phone button.
- OnStar will respond with "OnStar ready."
- Say "Security."
- OnStar will respond with "First digit of security code, please."
- Say the first digit of the code.
- OnStar will repeat that digit.
- Say the second digit of the code.
- OnStar will repeat that digit.
- Say the third digit of the code.
- OnStar will repeat that digit.
- Say the fourth digit of the code.
- OnStar will respond with "Security is ON/OFF."

If you forget the security code entered, or someone else enters a security code unknown to you, you must contact an OnStar advisor to reset the code. Press the OnStar button, or call (888) 4-ONSTAR.

Keeping Track of Units
You must prepurchase units (minutes) of cellular air time. The OnStar system tracks how many units you have remaining.
To find out how many units you have remaining:
- Press the CALL ANSWER/CALL END button.
- OnStar will respond with "Ready."
- Say "Units."
- OnStar will respond with "Verify or add."
- Say "Verify."
- OnStar will respond with "You have <number> units remaining."

Adding Units — To purchase more units of cellular air time:
- Press the CALL ANSWER/CALL END button.
- OnStar will respond with "OnStar ready."
- Say "Units."
- OnStar will respond with "Verify or add."
- Say "Add."
- OnStar will connect you to an automated system to handle your purchase.
- It is also possible to press the Onstar button and talk to an advisor to purchase more air time.

You can also call OnStar at (888) 4-ONSTAR, or get information about your account at the OnStar web site, www.onstar.com.

OnStar Virtual Advisor
When you subscribe to Personal Calling, you can also enjoy the benefits of Virtual Advisor. This feature lets you hear information in your vehicle about weather, sports, news, and stocks.

Although Virtual Advisor can provide information on many subjects, you can set up a customized profile with OnStar that makes it easier to get information about areas that are of specific interest to you. To do this, you must go to the OnStar web site, www.onstar.com. This is a secure site; you will need your account number and PIN to access your account information and to design your customized profile.

If you do not have Internet access, a default profile can be set up for you.

To use the Virtual Advisor from your vehicle:

- Press the CALL ANSWER/CALL END button.
- OnStar will respond with “OnStar ready.”
- Say “Virtual Advisor.”

The system will connect you to the Virtual Advisor. The Virtual Advisor will prompt you for the information you desire.

If you would like to hear a list of voice commands that are available, say “What are my choices.” OnStar is continually upgrading the system, so new commands may become available.

Personal Identification Number
You make up and provide your Personal Identification Number (PIN) when you establish your account with OnStar. You should write down your PIN, and keep it with you at all times.

You can change your PIN at any time. Contact the OnStar advisor by pressing the OnStar button, or by calling (888) 4-ONSTAR.

If you forget your PIN, contact the OnStar advisor. For security reasons, your PIN will be mailed to you.

System Limitations
OnStar uses the global positioning system (GPS) to locate your vehicle for functions such as route guidance and roadside assistance. GPS is affected by structures that can obstruct the signal, such as tunnels, parking structures, and tall buildings. It may not be possible for OnStar to pinpoint your location if you are in or near such structures.

OnStar uses cellular technology to communicate with your vehicle. Cellular coverage varies by location, which may affect the ability to establish a connection, or the quality of the connection.

OnStar has an antenna on the roof of the vehicle. To avoid reception problems, do not cover this antenna.

When you turn off your vehicle's ignition, the OnStar system goes into low-power mode. After 48 hours, it switches to sleep mode to conserve your vehicle's battery power. Features such as remote door unlocking and misplaced vehicle assistance will not work after your vehicle has been parked for more than 48 hours.

OnStar® is a registered trademark of the OnStar Corporation.

As required by the FCC: This device complies with Part 15 of the FCC rules. Operation is subject to the following two conditions: (1) This device may not cause harmful interference, and (2) this device must accept any interference received, including interference that may cause undesired operation.

Changes or modifications not expressly approved by the party responsible for compliance could void the user's authority to operate the equipment.

This device complies with Industry Canada Standard RSS-210. Operation is subject to the following two conditions: (1) this device may not cause interference, and (2) this device must accept any interference that may cause undesired operation of the device.

Before Driving

Before you begin driving your vehicle, you should know what gasoline to use and how to check the levels of important fluids. You also need to know how to properly store luggage or packages. The information in this section will help you. If you plan to add any accessories to your vehicle, please read the information in this section first.

Break-in Period 188
Gasoline Type 188
Service Station Procedures 189
Refueling..... 189
Opening and Closing the hood..... 190
Oil Check..... 191
Engine Coolant Check 192
Fuel Economy 192
Accessories and Modifications 193
Carrying Cargo 195

Break-in Period, Fuel Recommendation

Break-in Period
Help assure your vehicle's future reliability and performance by paying extra attention to how you drive during the first 600 miles (1,000 km). During this period:

- Avoid full-throttle starts and rapid acceleration.
- Avoid hard braking for the first 200 miles (300 km).
- Do not change the oil until the scheduled maintenance time.
- Do not tow a trailer.

You should also follow these recommendations with an overhauled or exchanged engine, or when the brakes are replaced.

Fuel Recommendation
Your vehicle is designed to operate on premium unleaded gasoline with a pump octane number of 91 or higher. Use of a lower octane gasoline can cause occasional metallic knocking noises in the engine and will result in decreased engine performance.

Use of a gasoline with a pump octane less than 87 can lead to engine damage.

We recommended using a quality gasoline containing detergent additives that help prevent fuel system and engine deposits.

In addition, in order to maintain good performance, fuel economy, and emissions control, we strongly recommend, in areas where it is available, the use of gasoline that does NOT contain manganese-based fuel additives such as MMT.

Use of gasoline with these additives may adversely affect performance, and cause the Malfunction Indicator Lamp on your instrument panel to come on. If this happens, contact your authorized Acura dealer for service.

Some gasoline today is blended with oxygenates such as ethanol or MTBE. Your vehicle is designed to operate on oxygenated gasoline containing up to 10 percent ethanol by volume and up to 15 percent MTBE by volume. Do not use gasoline containing methanol.

If you notice any undesirable operating symptoms, try another service station or switch to another brand of gasoline.

For further important fuel-related information, please refer to your **Quick Start Guide**.

Refueling

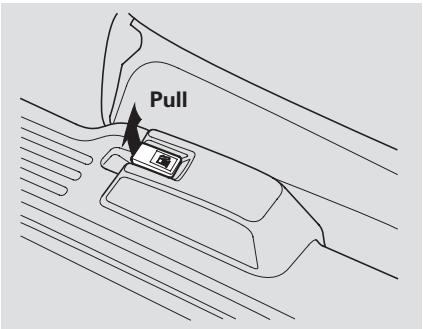

1. Park with the driver's side closest to the service station pump.

2. Open the fuel fill door by pulling on the handle to the left of the driver's seat.

3. Remove the fuel fill cap slowly. You may hear a hissing sound as pressure inside the tank escapes. Place the cap in the holder on the fuel fill door.

4. Stop filling the tank after the fuel nozzle automatically clicks off. Do not try to "top off" the tank. Leave some room for the fuel to expand with temperature changes.

If the fuel nozzle keeps clicking off even though the tank is not full, there may be a problem with your vehicle's fuel vapor recovery system. The system helps keep fuel vapors from going into the atmosphere. Consult your dealer.

⚠ WARNING

Gasoline is highly flammable and explosive. You can be burned or seriously injured when handling fuel.

- Stop the engine, and keep heat, sparks, and flame away.
- Handle fuel only outdoors.
- Wipe up spills immediately.

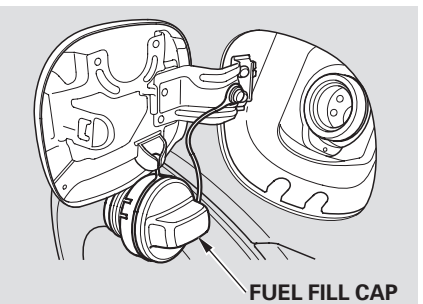

CONTINUED

Service Station Procedure

5. Screw the fuel fill cap back on until it clicks at least once. If you do not properly tighten the cap, the malfunction indicator lamp may come on (see page 273).

6. Push the fuel fill door closed until it latches.

Opening and Closing the Hood

1. Park the vehicle, and set the parking brake. Pull the hood release handle located under the lower left corner of the dashboard. The hood will pop up slightly.

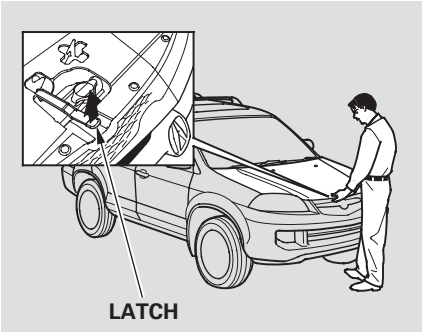

2. Put your fingers under the front edge of the hood near the center. Slide your hand to your left until you feel the hood latch handle. Push this handle up until it releases the hood. Lift up the hood.

If the hood latch handle moves stiffly, or if you can open the hood without lifting the handle, the mechanism should be cleaned and lubricated.

3. Lift the hood up most of the way. The hydraulic supports will lift it up the rest of the way and hold it up.

To close the hood, lower the hood to about a foot (30 cm) above the fender, then press down firmly with your hands. Make sure it is securely latched.

Oil Check

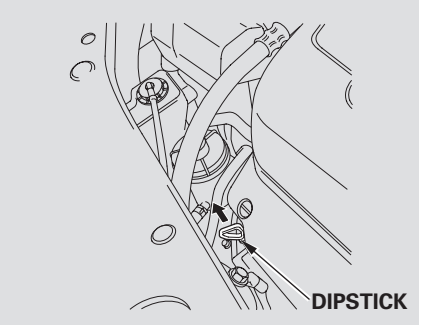

Wait a few minutes after turning the engine off before you check the oil.

1. Remove the dipstick (orange loop).

2. Wipe the dipstick with a clean cloth or paper towel.

3. Insert it all the way back in its hole.

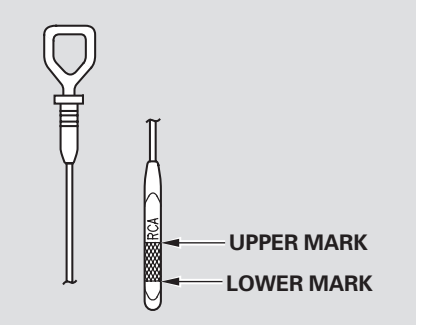

4. Remove the dipstick again, and check the level. It should be between the upper and lower marks.

If it is near or below the lower mark, see **Adding Oil** on page 237 .

Service Station Procedures, Fuel Economy

Engine Coolant Check

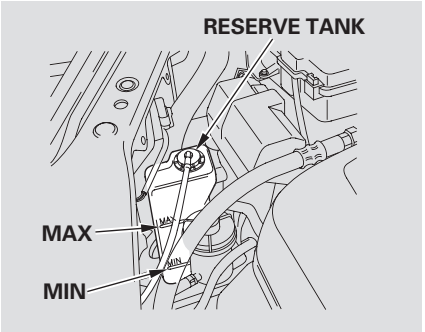

Look at the coolant level in the radiator reserve tank. Make sure it is between the MAX and MIN lines. If it is below the MIN line, see **Adding Engine Coolant** on page 240 for information on adding the proper coolant.

Refer to **Owner's Maintenance Checks** on page 230 for information about checking other items on your vehicle.

Improving Fuel Economy

- Always maintain your vehicle according to the maintenance schedule. See **Owner's Maintenance Checks** (see page 230).

  For example, an underinflated tire causes more "rolling resistance," which uses more fuel.

  The build-up of snow or mud on your vehicle's underside adds weight and rolling resistance. Frequent cleaning helps your fuel mileage and reduces the chance of corrosion.

- Drive moderately. Rapid acceleration, abrupt cornering, and hard braking use more fuel.

- Always drive in the highest gear possible.

- Try to maintain a constant speed. Every time you slow down and speed up, your vehicle uses extra fuel. Use cruise control when appropriate.

- Combine several short trips into one.

- The air conditioning puts an extra load on the engine which makes it use more fuel. Use the fresh-air ventilation when possible.

Modifying your vehicle, or installing some non-Acura accessories, can make your vehicle unsafe. Before you make any modifications or add any accessories, be sure to read the following information.

Accessories
Your dealer has Acura accessories that allow you to personalize your vehicle. These accessories have been designed and approved for your vehicle, and are covered by warranty.

Although non-Acura accessories may fit on your vehicle, they may not meet factory specifications, and could adversely affect your vehicle's handling and stability.

⚠WARNING

Improper accessories or modifications can affect your vehicle's handling, stability, and performance, and cause a crash in which you can be hurt or killed.

Follow all instructions in this owner's manual regarding accessories and modifications.

When properly installed, cellular phones, alarms, two-way radios, and low-powered audio systems should not interfere with your vehicle's computer controlled systems, such as your airbags, anti-lock brakes, and Tire Pressure Monitoring System.

Before installing any accessory:

- Make sure the accessory does not obscure any lights, or interfere with proper vehicle operation or performance.
- Be sure electronic accessories do not overload electrical circuits (see page 277) or interfere with proper operation of your vehicle.
- Do not install accessories on the side pillars or across the rear windows. In these areas, accessories may interfere with proper operation of the side curtain airbags.
- Before installing any electronic accessory, have the installer contact your dealer for assistance. **If possible, have your dealer inspect the final installation.**

Modifying Your Vehicle
Removing parts from your vehicle, or replacing components with aftermarket components could seriously affect your vehicle's handling, stability, and reliability.

Some examples are:
- Lowering your vehicle with a non-Acura suspension kit that significantly reduces ground clearance can allow the undercarriage to hit speed bumps or other raised objects, which could cause the airbags to deploy.
- Raising your vehicle with a non-Acura suspension kit can affect the handling and stability.
- Non-Acura wheels, because they are a universal design, can cause excessive stress on suspension components and will not be compatible with the tire Pressure Monitoring System.
- Larger or smaller wheels and tires can interfere with the operation of your vehicle's anti-lock brakes and other systems.

Modifying your steering wheel or any other part of your vehicle's safety features can make the systems ineffective.

If you plan to modify your vehicle, consult your dealer.

Carrying Cargo

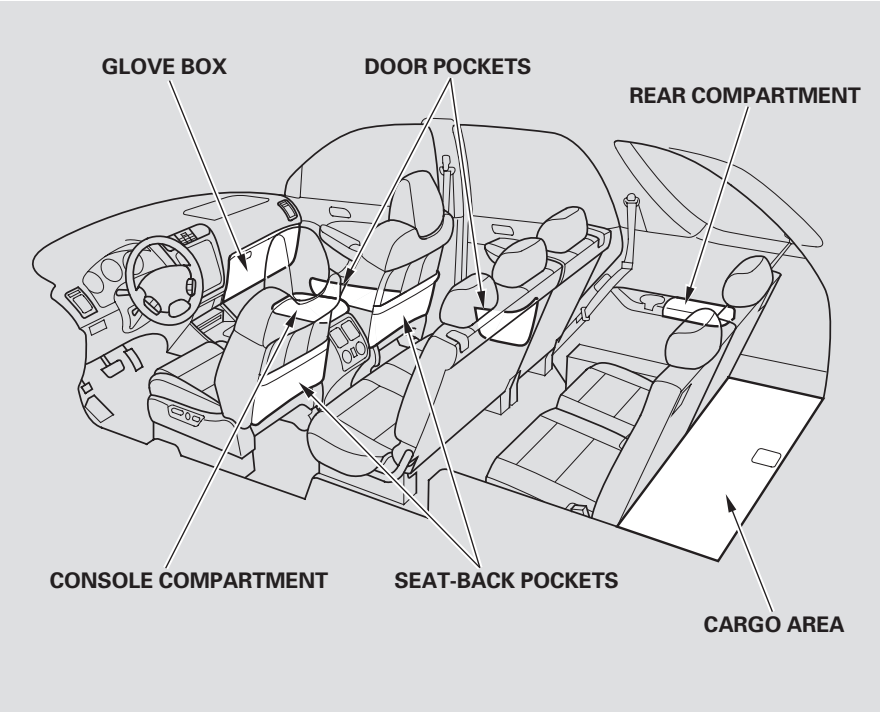

Your vehicle has several convenient storage areas:

- Glove box
- Front door and seat-back pockets
- Rear cargo area, including the second and third row seats when folded flat
- Console compartment
- Rear compartment
- Roof-rack (if equipped)

However, carrying too much cargo, or improperly storing it, can affect your vehicle's handling, stability, stopping distance, and tires, and make it unsafe. Before carrying any type of cargo, be sure to read the following pages.

Carrying Cargo

Load Limits
The maximum load for your vehicle is 1,158 lbs (525 kg). This figure includes the total weight of all occupants, cargo, and accessories, and the tongue load if you are towing a trailer.

To determine the correct cargo and luggage load limit:

1. Locate the statement, "the combined weight of occupants and cargo should never exceed 1,158 lbs (525 kg)" on your vehicle's placard (on the driver's doorjamb).

2. Determine the combined weight of the driver and passengers that will be riding in your vehicle.

3. Subtract the combined weight of the driver and passengers from 1,158 lbs (525 kg).

4. The resulting figure equals the available amount of cargo and luggage load capacity.

For example, the maximum load is 1,158 lbs and there will be five 150 lbs passengers in your vehicle, the amount of available cargo is 408 lbs. 1,158 − 750 (5 × 150) = 408 lbs (175 kg)

5. Determine the combined weight of accessories, luggage, and cargo being loaded in the vehicle. That weight may not safely exceed the available cargo and luggage load capacity calculated in step 4 [408 lbs (175 kg) in this example].

6. If your vehicle will be towing a trailer, load from your trailer will be transferred to your vehicle. Consult this manual to determine how this reduces the available cargo and luggage load capacity of your vehicle (see page 215).

⚠ WARNING

Overloading or improper loading can affect handling and stability and cause a crash in which you can be hurt or killed.

Follow all load limits and other loading guidelines in this manual.

In addition, the total weight of the vehicle, all occupants, accessories, and cargo must not exceed the Gross Vehicle Weight Rating (GVWR) or the Gross Axle Weight Rating (GAWR). Both are on a label on the driver's doorjamb.

Carrying Cargo in the Passenger Compartment

- Store or secure all items that could be thrown around and hurt someone during a crash.
- Be sure items placed on the floor behind the front seats cannot roll under the seats and interfere with proper operation of the pedals, the front seats, or the advanced front airbags.
- Keep the glove box closed while driving. If it is open, a passenger could injure their knees during a crash or sudden stop.

Carrying Cargo in the Cargo Area or on a Roof Rack

- Distribute cargo evenly on the floor of the cargo area, placing the heaviest items on the bottom and as far forward as possible. Tie down items that could be thrown about the vehicle during a crash or sudden stop.
- If you fold down the second or third row seats, tie down items that could be thrown about the vehicle during a crash or sudden stop.
- If you carry large items that prevent you from closing the tailgate, exhaust gas can enter the passenger area. To avoid the possibility of **carbon monoxide poisoning**, follow the instructions on page 54 .
- If you carry any items on a roof rack, be sure the total weight of the rack and the items does not exceed 165 lbs (75 kg).
- If you use an accessory roof rack, the roof rack weight limit may be lower. Refer to the information that came with your roof rack.

Optional Separation Net

The separation net can be used to hold back soft, lightweight items stored in the cargo area. Heavy items should be tied down, as the net may not prevent them from being thrown about the vehicle in a crash or a sudden stop.

Optional Cargo Cover

The cargo cover can be used to cover the cargo area behind the third row seats. When the third row seats are folded down, the cargo cover can be extended over the larger area. Do not install the cover over the larger area if the third row seats are not folded down.

Driving

This section gives you tips on starting the engine under various conditions, and how to operate the automatic transmission. It also includes important information on parking your vehicle, the braking system, the VTM-4 system, the VSA system, the tire pressure monitoring system, and facts you need if you are planning to tow a trailer.

Driving Guidelines..... 200
Preparing to Drive 200
Starting the Engine..... 201
Automatic Transmission..... 202
Variable Torque Management
4WD System..... 206
VTM-4 Lock 206
Tire Pressure Monitoring System
(TPMS) 207
Parking..... 209
Braking System..... 210
Anti-lock Brakes 211
Vehicle Stability Assist (VSA)
System..... 213
Towing Weight Limits 215
Towing a Trailer 216
Off-Highway Guidelines 224

Driving Guidelines, Preparing to Drive

Driving Guidelines
Your vehicle has higher ground clearance that allows you to travel over bumps, obstacles, and rough terrain. It also provides good visibility so you can anticipate problems earlier.

Because your vehicle rides higher off the ground, it has a high center of gravity that can cause it to roll over if you make abrupt turns. Utility vehicles have a significantly higher roll over rate than other types of vehicles.

To prevent rollovers or loss of control:

- Take corners at slower speeds than you would with a passenger vehicle.
- Avoid sharp turns and abrupt maneuvers whenever possible.
- Do not modify your vehicle in any way that would raise the center of gravity.
- Do not carry heavy cargo on the roof.

See page 224 for off-highway driving guidelines.

Preparing to Drive
You should do the following checks and adjustments before you drive your vehicle.

1. Make sure all windows, mirrors, and outside lights are clean and unobstructed. Remove frost, snow, or ice.
2. Visually check the tires. If a tire looks low, use a gauge to check its pressure.
3. Check that any items you may be carrying are stored properly or fastened down securely.
4. Check the seat adjustment (see page 86).
5. Check the adjustment of the inside and outside mirrors (see page 95).
6. Check the steering wheel adjustment (see page 78).
7. Make sure the doors and tailgate are securely closed and locked.
8. Fasten your seat belt. Check that your passengers have fastened their seat belts (see page 16).
9. When you start the engine, check the gauges and indicators in the instrument panel (see page 59).

1. Apply the parking brake.

2. In cold weather, turn off all electrical accessories to reduce the drain on the battery.

3. Make sure the shift lever is in Park. Press on the brake pedal.

4. Without touching the accelerator pedal, turn the ignition key to the START (III) position. Do not hold the key in the START (III) position for more than 15 seconds at a time. If the engine does not start right away, pause for at least 10 seconds before trying again.

NOTICE

The immobilizer system protects your vehicle from theft. If an improperly-coded key (or other device) is used, the engine's fuel system is disabled. For more information, see page 80 .

5. If the engine does not start within 15 seconds, or starts but stalls right away, repeat step 4 with the accelerator pedal pressed halfway down. If the engine starts, release pressure on the accelerator pedal so the engine does not race.

6. If the engine fails to start, press the accelerator pedal all the way down, and hold it there while starting to clear flooding. If the engine still does not start, return to step 5.

NOTICE

The engine is harder to start in cold weather. Also, the thinner air found at altitudes above 8,000 feet (2,400 meters) adds to this problem.

Automatic Transmission

Shift Lever Position Indicators

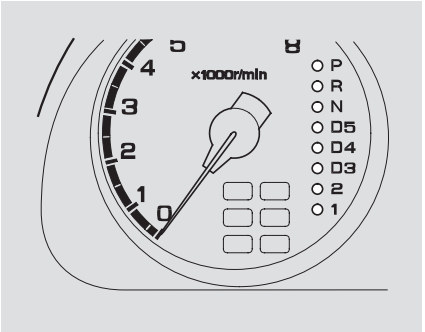

These indicators on the instrument panel show which position the shift lever is in.

The "D5" indicator comes on for a few seconds when you turn the ignition switch to the ON (II) position. If it flashes while driving (in any shift position), it indicates a possible problem in the transmission.

If the malfunction indicator lamp come on along with the "D5" indicator, there is a problem in the automatic transmission control system. Avoid rapid acceleration and have the transmission checked by an Acura dealer as soon as possible.

Shifting

Before shifting from park to any position, press firmly on the brake pedal making sure to keep your foot off the accelerator pedal. You cannot shift out of Park when the ignition switch is in the LOCK (0) or ACCESSORY (I) position.

To shift from:	Do this:
P to R	Press the brake pedal, making sure to keep your foot off the accelerator pedal, then move the shift lever.
R to N N to D5 D5 to D4 D4 to D3 D3 to 2 2 to 1 1 to 2 2 to D3 D3 to D4 D4 to D5 D5 to N N to R R to P	Move the lever.

Park (P) — This position mechanically locks the transmission. Use Park whenever you are turning off or starting the engine. To shift out of Park, you must press on the brake pedal and have your foot off the accelerator pedal.

If you have done all of the above and still cannot move the lever out of Park, see **Shift Lock Release** on page 205 .

To avoid transmission damage, come to a complete stop before shifting into Park. The shift lever must be in Park before you can remove the key from the ignition switch.

Reverse (R) — Press the brake pedal, making sure to keep your foot off the accelerator pedal, then shift from Park to Reverse. To shift from Neutral to Reverse, come to a complete stop and then shift.

Your vehicle has a reverse lockout so you cannot accidentally shift to Reverse from Neutral or any other driving position when the vehicle speed exceeds 7 — 9 mph (12 — 14 km/h).

If you cannot shift to Reverse when the vehicle is stopped, press the brake pedal and slowly shift to Neutral, and then to Reverse.

If there is a problem in the reverse lockout system, or your vehicle's battery is disconnected or goes dead, you cannot shift to reverse. (Refer to **Shift Lock Release** on page 205).

Neutral (N) — Use Neutral if you need to restart a stalled engine, or if it is necessary to stop briefly with the engine idling. Shift to the Park position if you need to leave your vehicle for any reason. Press the brake pedal, making sure to keep your foot off the accelerator pedal, when you are moving the shift lever from Neutral to another gear.

Drive (D5) — Use this position for normal driving. The transmission automatically selects a suitable gear for your speed and acceleration. You may notice the transmission shifting up at higher speeds when the engine is cold. This helps the engine warm up faster.

CONTINUED

Drive (D4, D3) — These positions are similar to D5, except when you select the D4 position, only the first four gears are selected. When you select D3, only the first three gears are selected. D4 can also keep the transmission from cycling between fourth and fifth gears in stop-and-go driving, and D3 can keep the transmission from cycling between third and fourth gears.

Use D3 to provide engine braking when going down a steep hill. D3 gives you more power and increased engine braking.

Second (2) — This position locks the transmission in second gear. It does not downshift to first gear when you come to a stop.

Use second gear:
- For more power when climbing.
- To increase engine braking when going down steep hills.
- For starting out on a slippery surface or in deep snow.
- To help reduce wheel spin.
- When driving downhill with a trailer.

First (1) — With the lever in this position, the transmission locks in First gear.

If you shift into first position when the vehicle speed is above 31 mph (50 km/h), the transmission shifts into second gear first to avoid sudden engine braking.

Engine Speed Limiter
If you exceed the maximum speed for the gear you are in, the engine speed will enter into the tachometer's red zone. If this occurs, you may feel the engine cut in and out. This is caused by a limiter in the engine's computer controls. The engine will run normally when you reduce the rpm below the red zone.

Shift Lock Release
Do this if pushing on the brake pedal does not shift the transmission out of Park. This procedure is also used to release the Reverse Lockout.

1. Set the parking brake.

2. Make sure the ignition switch is in the LOCK (0) position.

   To release the Reverse Lockout, make sure the ignition switch is in the ACCESSORY (I) position.

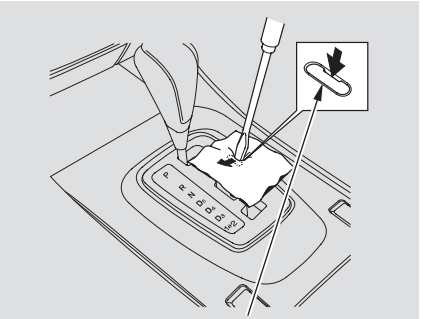

COVER

3. Put a cloth on the edge of the Shift Lock Release slot cover. Using a key, carefully pry on the edge of the cover to remove it.

4. Insert the key in the shift lock release slot.

5. Push down on the key and move the shift lever out of Park to Neutral.

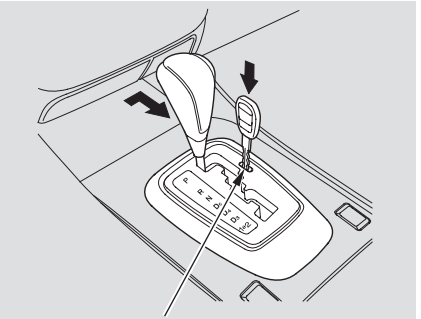

SHIFT LOCK RELEASE SLOT

   To release the reverse lockout, move the shift lever from neutral to reverse, then to Park.

6. Remove the key from the Shift Lock Release slot. Press the brake pedal and restart the engine.

If you need to use the shift lock release, it means your vehicle is developing a problem. Have it checked by your dealer.

VTM-4 System

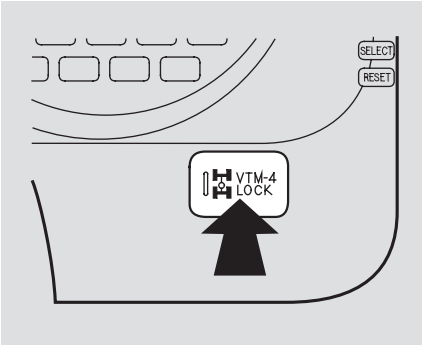

The variable torque management 4WD (VTM-4) system automatically transfers varying amounts of engine torque to the rear wheels under lower traction conditions.

If more traction is needed when your vehicle is stuck, or is likely to become stuck, you can use the VTM-4 lock button to increase torque to the rear wheels.

To Engage the VTM-4 Lock

1. The vehicle must be stopped with the engine running.
2. Move the shift lever to first (1), second (2), or reverse (R) gear.
3. Press the VTM-4 lock button. The indicator in the button comes on.

To get unstuck, apply light pressure to the accelerator pedal. Do not spin the front tires for more than a few seconds. Because of the amount of torque applied to the rear tires, they should not spin. This is normal. If you are not able to move the vehicle, stop and reverse direction.

NOTICE

Do not use the VTM-4 LOCK button on dry, paved roads. Driving on dry, paved roads with VTM-4 Lock ON may damage the rear differential when making a turn. Strange noise and vibration can also result.

To Disengage the VTM-4 Lock, do any of the following:

- Press the VTM-4 LOCK button.
- Move the shift lever to D5, D4 or D3.
- Turn the ignition switch to the LOCK (0) position.

The VTM-4 lock will temporarily disengage when the vehicle speed exceeds 18 mph (30 km/h). It will automatically engage again as the speed slows below 18 mph (30 km/h). The indicator in the button will remain on.

NOTICE

Do not continuously spin the front tires of your vehicle. Continuously spinning the front tires can cause transmission or rear differential damage.

Tire Pressure Monitoring System (TPMS)

Your vehicle is equipped with a tire pressure monitoring system (TPMS) that turns on every time you start the engine and monitors the pressure in your tires while driving.

Each tire has its own pressure sensor. If the air pressure of a tire becomes significantly low, the sensor in that tire immediately sends a signal that causes the low tire pressure indicator and the appropriate tire on the tire pressure monitor to come on.

Low Tire Pressure Indicator

When this indicator is on, one or more of your tires is significantly under inflated. You should stop and check your tires as soon as possible.

If you think you can safely drive a short distance to a service station, proceed slowly, and inflate the tire to the recommended pressure shown on the driver's doorjamb.

If the tire is flat, or if the tire pressure is too low to continue driving, replace the tire with the compact spare tire.

Driving on a significantly under-inflated tire causes the tire to overheat and can lead to tire failure. Under-inflation also reduces fuel efficiency and tire tread life, and may affect the vehicle's handling and stopping ability.

Although your tire pressure is monitored, each tire should be checked monthly, including the spare.

Check the pressure with the tires cold, after the vehicle has been parked for at least 2 hours.

Set to the recommended inflation pressure as specified on the vehicle placard and in this owner's manual (see page 252).

Tire Pressure Monitoring System (TPMS)

Tire Pressure Monitor

The appropriate tire indicator and low tire pressure indicator comes on if a tire becomes significantly underinflated. See **Low Tire Pressure Indicator** on page 207 .

Tire Pressure Monitoring System (TPMS) Indicator

This indicator comes on and stays on if there is a problem with the tire pressure monitoring system.

If this happens, the system will shut off and no longer monitor tire pressures. Have the system checked by your dealer as soon as possible.

Changing a Tire with TPMS

If you have a flat tire, the low tire pressure and tire monitor indicators will come on. Replace the indicated flat tire with the compact spare tire (see page 261).

Each wheel is equipped with a tire pressure sensor mounted inside the tire behind the valve stem. You must use TPMS specific wheels. It is recommended that you always have your tires serviced by your dealer or qualified technician.

After you replace the flat tire, the low tire pressure indicator stays on. This is normal; the system is not monitoring the spare tire pressure. Manually check the spare tire pressure to be sure it is correct.

Never use a puncture-repairing agent in a flat tire. If used, you will have to replace the tire pressure sensor. Have the flat tire repaired by your dealer as soon as possible.

As required by the FCC:
This device complies with Part 15 of the FCC rules. Operation is subject to the following two conditions: (1) This device may not cause harmful interference, and (2) this device must accept any interference received, including interference that may cause undesired operation.

Changes or modifications not expressly approved by the party responsible for compliance could void the user's authority to operate the equipment.

This device complies with Industry Canada Standard RSS-210.
Operation is subject to the following two conditions: (1) this device may not cause interference, and (2) this device must accept any interference that may cause undesired operation of the device.

Always use the parking brake when you park your vehicle. Make sure the parking brake is set firmly or your vehicle may roll if it is on an incline.

Set the parking brake before you put the transmission in Park. This keeps the vehicle from moving and putting pressure on the parking mechanism in the transmission.

Parking Tips

- Make sure the moonroof and the windows are closed.
- Turn off the lights.
- Place any packages, valuables, etc. in the cargo area or take them with you.
- Lock the doors.
- Never park over dry leaves, tall grass, or other flammable materials. The hot three way catalytic converter could cause these materials to catch on fire.
- If the vehicle is facing uphill, turn the front wheels away from the curb, and set the parking brake.
- If the vehicle is facing downhill, turn the front wheels toward the curb, and set the parking brake.
- Make sure the parking brake is fully released before driving away. Driving with the parking brake partially set can overheat or damage the rear brakes.

Braking System

Your vehicle is equipped with disc brakes at all four wheels. A power assist helps reduce the effort needed on the brake pedal. The anti-lock brake system (ABS) helps you retain steering control when braking very hard.

Resting your foot on the pedal keeps the brakes applied lightly, builds up heat, and reduces their effectiveness. It also keeps your brake lights on all the time, confusing drivers behind you.

Constant application of the brakes when going down a long hill builds up heat and reduces their effectiveness. Use the engine to assist the brakes by taking your foot off the accelerator and downshifting to a lower gear.

Check the brakes after driving through deep water. Apply the brakes moderately to see if they feel normal. If not, apply them gently and frequently until they do. Be extra cautious in your driving.

Braking System Design
The hydraulic system that operates the brakes has two separate circuits. Each circuit works diagonally across the vehicle (the left-front brake is connected with the right-rear brake, etc.). If one circuit should develop a problem, you will still have braking at two wheels.

Brake Wear Indicators
If the brake pads need replacing, you will hear a distinctive, metallic screeching sound when you apply the brake pedal. If you do not have the brake pads replaced, they will screech all the time. It is normal for the brakes to occasionally squeal or squeak when you apply them.

Anti-lock Brakes (ABS)

The anti-lock brake system (ABS) helps prevent the brakes from locking up, and helps you retain steering control by pumping the brakes rapidly, much faster than a person can do it.

The ABS also balances the front-to-rear braking distribution according to vehicle loading.

You should never pump the brake pedal. Let the ABS work for you by always keeping firm, steady pressure on the brake pedal. This is sometimes referred to as "stomp and steer."

You will feel a pulsation in the brake pedal when the ABS activates, and may hear some noise. This is normal: it is the ABS rapidly pumping the brakes. On dry pavement, you will need to press on the brake pedal very hard before the ABS activates. However, you may feel the ABS activate immediately if you are trying to stop on snow or ice.

ABS Indicator

If this indicator comes on, the anti-lock function of the braking system has shut down. The brakes still work like a conventional system, but without anti-lock. You should have your dealer inspect your vehicle as soon as possible.

If the indicator comes on while driving, test the brakes as instructed on page 274 .

Anti-lock Brakes (ABS)

If the ABS indicator and the brake system indicator come on together and the parking break is fully released, the front-to-rear braking distribution system may also shut down.

Important Safety Reminders
ABS does not reduce the time or distance it takes to stop the vehicle. It only helps with steering control during braking.

ABS will not prevent a skid that results from changing direction abruptly, such as trying to take a corner too fast or making a sudden lane change.

ABS cannot prevent a loss of stability. Always steer moderately when you are braking hard. Severe or sharp steering wheel movement can still cause your vehicle to veer into oncoming traffic or off the road.

A vehicle with ABS may require a longer distance to stop on loose or uneven surfaces, such as gravel or snow, than a vehicle without anti-lock.

The vehicle stability assist (VSA) system helps to stabilize the vehicle during cornering if the vehicle turns more or less than desired. It also assists you in maintaining traction while accelerating on loose or slippery road surfaces. It does this by regulating the engine's output and by selectively applying the brakes.

When VSA activates, you may notice that the engine does not respond to the accelerator in the same way it does at other times. There may also be some unusual noise from the modulator.

The VSA system cannot enhance the vehicle's driving stability in all situations and does not control your vehicle's entire braking system. It is still your responsibility to drive and corner at reasonable speeds and to leave a sufficient margin of safety.

VSA Activation Indicator

When VSA activates, you will see the VSA activation indicator blink. There may also be some unusual noise from the modulator.

VSA System Indicator

If the VSA system indicator comes on while driving, pull to the side of the road when it is safe, and turn off the engine. Reset the system by restarting the engine. If the VSA system indicator stays, or comes back on while driving, have the VSA system inspected by your dealer.

CONTINUED

Vehicle Stability Assist (VSA) System

If the indicator does not come on when the ignition switch is turned to the ON (II) position, there may be a problem with the VSA system. Have your dealer inspect your vehicle as soon as possible.

Without VSA, your vehicle will have normal braking and cornering ability, but it will not have VSA traction and stability enhancement.

VSA Off Switch

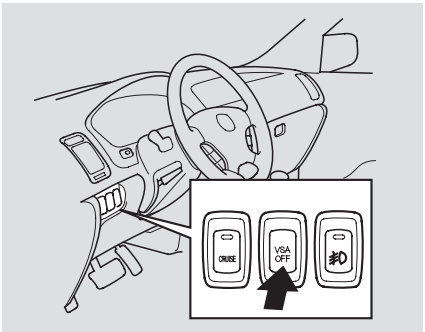

This switch is under the left vent. Press it to turn the VSA system on and off.

When VSA is off, the VSA activation indicator comes on as a reminder.

VSA is turned on every time you start the engine, even if you turned it off the last time you drove the vehicle.

VSA and Tire Sizes

Driving with varying tire or wheel sizes may cause the VSA to malfunction. When replacing tires, make sure they are of the same size and type as your original tires (see page 255).

Deactivate the VSA system if you need to drive with the compact spare tire installed (see page 260).

If you install winter tires, make sure they are the same size as those that were originally supplied with your vehicle. Exercise the same caution during winter driving as you would if your vehicle was not equipped with VSA.

Towing Weight Limits

Your vehicle has been designed to primarily carry passengers and their cargo. You can also use it to tow a trailer if you carefully observe the load limits, use the proper equipment, and follow the guidelines in this section.

Be sure to read the **Off-Highway Driving Guidelines** section on page 224 if you plan to tow off paved surfaces.

⚠ WARNING

Exceeding any load limit or improperly loading your vehicle and trailer can cause a crash in which you can be seriously hurt or killed.

Check the loading of your vehicle and trailer carefully before starting to drive.

Load Limit

Total Trailer Weight
The maximum allowable weight of the trailer and everything in or on it depends on the number of occupants in your vehicle and the type of trailer being towed (see page 217).

Towing a trailer that is too heavy can seriously affect your vehicle's handling and performance. It can also damage the engine and driven.

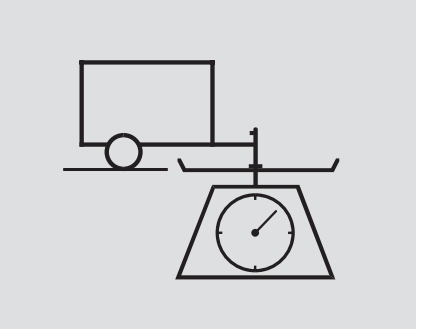

Tongue Load
The weight that the tongue of a fully loaded trailer puts on the hitch should be 5 to 10 percent of the total trailer weight for boat trailers, and 8 to 15 percent of total trailer weight for all other trailers. (See page 217 for limits for your towing situation). Too much tongue load reduces front-tire traction and steering control. Too little tongue load can make the trailer unstable and cause it to sway.

Gross Vehicle Weight Rating (GVWR) — The maximum allowable weight of the vehicle, all occupants, all accessories, all cargo and the tongue load is 5,787 lbs (2,630 kg).

Gross Axle Weight Ratings (GAWR) — The maximum allowable weight of the vehicle, all occupants, all accessories, all cargo, and the tongue load must not exceed 2,888 lbs (1,310 kg) on the front axle, and 2,992 lbs (1,360 kg) on the rear axle.

Gross Combined Weight Rating (GCWR):
The maximum allowable weight of the fully loaded vehicle and trailer is 9,854 lbs (4,470 kg) with the proper hitch and fluid coolers. (See page 219 for information about fluid coolers.)
The GCWR must be reduced 2 percent for every 1,000 feet (305 meters) of elevation.

Estimating Loads
The best way to confirm that all loads are within limits is to check them at a public scale. For public scales in your area, check your local phone book, or contact your trailer dealer or rental agency for assistance.
To help ensure a safe drive to a scale, or if you cannot get to a public scale, we recommend that you estimate your total trailer weight and tongue load as described next.

To Estimate the Total Trailer Weight
Add the weight of your trailer (as quoted by the manufacturer) with everything in or on the trailer. Then check the tables on page 217 to make sure you do not exceed the limit for your conditions.

To Estimate the Tongue Load
1. Park the vehicle on level ground.
2. Measure and record the distance from the ground to the bottom of the trailer hitch.
3. Connect the fully loaded trailer to the hitch.
4. Measure again from the ground to the same spot on the bottom of the hitch.
5. Subtract the second measurement from the first measurement, then refer to the following table.

If the difference is:	Estimated tongue load is:
1 ½”	150 lbs (68 kg)
2 ¼”	250 lbs (114 kg)
3”	350 lbs (159 kg)
3 ¾”	450 lbs (205 kg)

If the difference is more than 3 ¾ inch, you have too much load on the tongue. Redistribute the load or remove cargo as needed.

Total Trailer Weight and Tongue Load Limits:

BOAT TRAILERS

Number of Occupants*	Equipped with transmission cooler and power steering fluid cooler.	
	Max. Trailer Weight	Max. Tongue Load
2	4500 lbs (2045 kg)	450 lbs (205 kg)
3	4500 lbs (2045 kg)	410 lbs (185 kg)
4	4500 lbs (2045 kg)	310 lbs (140 kg)
5	4000 lbs (1820 kg)	215 lbs (100 kg)
6	1700 lbs (770 kg)	90 lbs (40 kg)
7	Towing is Not Recommended	

OTHER TYPES OF TRAILERS

Number of Occupants*	Equipped with transmission cooler and power steering fluid cooler.	
	Max. Trailer Weight	Max. Tongue Load
2	3500 lbs (1590 kg)	450 lbs (205 kg)
3	3500 lbs (1590 kg)	410 lbs (185 kg)
4	3000 lbs (1365 kg)	310 lbs (140 kg)
5	2000 lbs (910 kg)	215 lbs (100 kg)
6	1000 lbs (455 kg)	90 lbs (40 kg)
7	Towing is Not Recommended	

* The corresponding weight limits assume occupants fill seats from the front of the vehicle to the back, each occupant weighs 150 lbs (70 kg) and each has 15 lbs (7 kg) of luggage in the cargo area.

Towing a Trailer

Checking Loads
To accurately check your loads at the public scale, the vehicle and trailer should be fully loaded, and all occupants should stay in the vehicle while the attendant watches the scale.

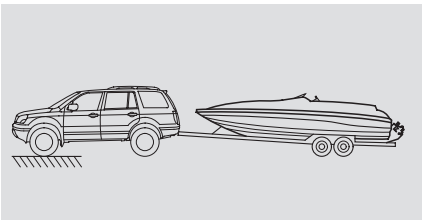

1. Check the front gross axle weight. Limit: 2882 lbs (1307 kg)

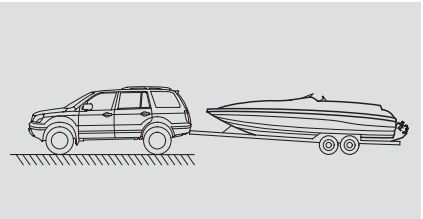

2. Check the gross vehicle weight. Limit: 5,798 lbs (2,630 kg)

3. If you cannot weight on the rear axle directly, you can calculate the rear gross axle weight by subtracting the weight in Step 1 from the weight in Step 2.

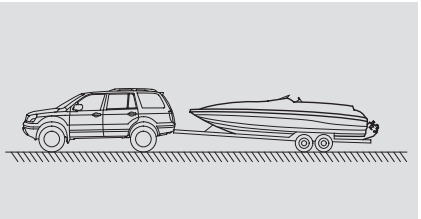

4. Remember, maximum gross combined weight should be decreased 2 % for every 1,000 feet (305 meters) of elevation.

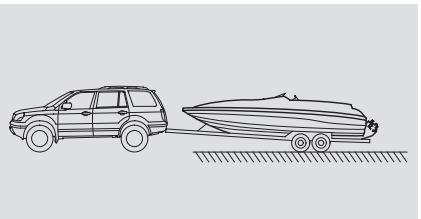

5. Check the weight of the hitched trailer. Write this number down.

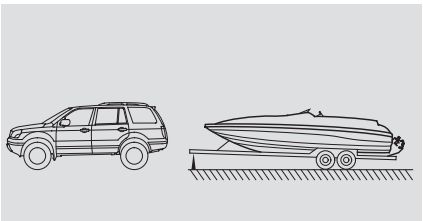

6. Check the weight of the unhitched trailer. Limit: See page 217 .

7. Calculate the tongue load.
   Subtract the weight in Step 5 from the
   weight in step 6.
   Limit: See page 217 .
   Range: 5-10% for boat trailers
   8-15% for other trailers

Towing Equipment and Accessories

Towing generally requires a variety of supplemental equipment. To ensure the best quality, we recommend that you purchase Acura equipment whenever possible.

Your dealer offers a trailer package that includes a hitch, a ball mount, a wiring harness, a heavy-duty transmission fluid cooler.

Discuss any additional needs with your trailer sales or rental agency, and make sure all equipment is properly installed, maintained, and also meets state, federal, province, and local regulations.

Hitch

We strongly recommend that you have your dealer install an Acura hitch and use the required fluid coolers. Using non-Acura equipment may result in serious damage to your vehicle.

Transmission Fluid Cooler and Power Steering Fluid Cooler

To help prevent overheating, a heavy-duty transmission fluid cooler and a heavy-duty power steering fluid cooler are required for trailer towing. These coolers are available only from your dealer.

Weight Distributing Hitch

A weight distributing hitch is not recommended for use with your vehicle, as an improperly adjusted weight distributing hitch may reduce handling, stability, and braking performance.

CONTINUED

Towing a Trailer

Trailer Brakes
Acura requires that any trailer with a total trailer weight of 1,000 lbs (455 kg) or more have its own brakes.

There are two common types of trailer brakes: surge and electric. Surge brakes are common for boat trailers, since the brakes will get wet.

If you choose electric brakes, be sure they are electrically actuated. Do not attempt to tap into your vehicle's hydraulic system. No matter how successful it may seem, any attempt to attach trailer brakes to your vehicle's hydraulic system will lower braking effectiveness and create a potential hazard.

See your trailer manufacturer for more information on installing electric brakes.

Safety Chains
Always use safety chains when you tow a trailer. Make sure the chains are secured to the trailer and hitch, and that they cross under the tongue and can catch the trailer if it becomes unhitched. Leave enough slack to allow the trailer to turn corners easily, but do not let the chains drag on the ground.

Sway Control
This device is recommended if your trailer tends to sway. Your trailer maker can tell you what kind of sway control you need and how to install it.

Trailer Mirrors
Many states and provinces require special exterior mirrors when towing a trailer. Even if they don't, you should install special mirrors if you cannot clearly see behind you, or if the trailer creates a blind spot.

Spare Tires
When towing a trailer, we recommend that you carry a full-size spare wheel and tire for your vehicle and trailer. See page 255 for proper tire size, page 266 for how to store a full size wheel and tire, and page 261 for information on changing a flat tire.

Remember to unhitch the trailer before changing a flat. Ask your trailer sales or rental agency where and how to store the trailer's spare tire.

Trailer Lights

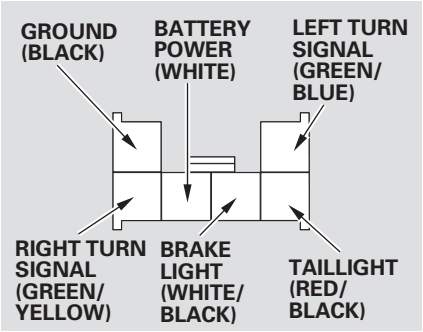

Trailer lights and equipment must comply with federal, state, province, and local regulations. Check trailer light requirements for the areas where you plan to tow, and use only equipment designed for your vehicle.

To get to your vehicle's trailer lighting connector, open the tailgate, remove the cargo cover, then remove the rear panel trim. The connector is on the left side.

We recommend that you have your dealer install a Acura wiring harness and converter. This harness has been designed for your vehicle.

If you use a non-Acura trailer lighting harness and converter, you can get the mating connector and pins that mate with the connector in your vehicle from your dealer.

Since lighting and wiring vary with trailer type and brand, you should also have a qualified mechanic install a suitable connector between the vehicle and the trailer.

Pre-Tow Checklist

When preparing to tow, and before driving away, be sure to check the following:

- The vehicle has been properly serviced, and the tires, brakes, suspension, cooling system, and lights are in good operating condition. If you tow frequently, follow the severe conditions maintenance schedule.
- The trailer has been properly serviced and is in good condition.
- All weights and loads are within limits.
- The hitch, safety chains, and any other attachments are secure.
- All items on and in the trailer are properly secured and cannot shift while you drive.

CONTINUED

- Your vehicle tires and spare are in good condition and properly inflated.
- The trailer tires and spare are in good condition and inflated as recommended by the trailer maker.

Driving Safely With a Trailer
The added weight, length, and height of a trailer will affect your vehicle's handling and performance, so driving with a trailer requires some special driving skills and techniques.

For your safety and the safety of others, take time to practice driving maneuvers before heading for the open road, and follow the guidelines below.

Break-In Period
Avoid towing a trailer during your vehicle's first 500 miles (800 kilometers) (see page 188).

Towing Speeds and Gears
Drive slower than normal in all driving situations, and obey posted speed limits for vehicles with trailers. When towing a fixed-sided trailer (e.g., camper), do not exceed 55 mph (88 km/h). At higher speeds, the trailer may sway or affect vehicle handling.

To prevent the transmission from shifting frequently, drive in the D4 position.

Making Turns and Braking
Make turns more slowly and wider than normal. The trailer tracks a smaller arc than your vehicle, and it can hit or run over something the vehicle misses. Allow more time and distance for braking. Do not brake or turn suddenly as this could cause the trailer to jackknife or turn over.

Driving on Hills
When climbing hills, closely watch your temperature gauge. If it nears the red (hot) mark, turn the air conditioning off, reduce speed and, if necessary, pull to the side of the road to let the engine cool.

If the transmission shifts frequently while going up a hill, shift to D3.

If you must stop when facing uphill, use the foot brake or parking brake. Do not try to hold the vehicle in place by pressing on the accelerator, as this can cause the automatic transmission to overheat.

When driving down hills, reduce your speed and shift down to D3. Do not "ride" the brakes. **Remember, it takes longer to slow down and stop when towing a trailer.**

Handling Crosswinds and Buffeting
Crosswinds and air turbulence caused by passing trucks can disrupt your steering and cause trailer to sway. When being passed by a large vehicle, keep a constant speed, and steer straight ahead. Do not try to make quick steering or braking corrections.

Backing Up
Always drive slowly and have someone guide you when backing up. Grip the *bottom* of the steering wheel, then turn the wheel to the left to get the trailer to move to the left. Turn the wheel to the right to move the trailer to the right.

Parking
Follow all normal precautions when parking, including putting the transmission in Park and firmly setting the parking brake. Also, place wheel chocks at each of the trailer's tires.

Retrieving a Boat
If the vehicle's tires slip when retrieving a boat from the water, shift to first gear, and turn on VTM-4 Lock (see page 206). Disengage VTM-4 Lock as soon as the boat is out of the water to prevent damage to the VTM-4 system.

Off-Highway Driving Guidelines

Your vehicle has been designed primarily for use on pavement. But its higher ground clearance and four-wheel drive VTM-4 system allow you to occasionally travel on unpaved roads, to campgrounds, picnic sites, and similar locations. It is not designed for trailblazing, mountain climbing, or other challenging off-road activities.

If you decide to drive on unpaved roads, you will find that it requires somewhat different driving skills. Your vehicle will also handle somewhat differently than it does on pavement. Be sure to pay extra attention to the precautions and tips in this section, and get acquainted with your vehicle before leaving the pavement.

⚠WARNING

Improperly operating this vehicle on or off-pavement can cause an accident or rollover in which you and your passengers could be seriously injured or killed.

- Follow all instructions and guidelines in this owner's manual.
- Keep your speed low, and don't drive faster than conditions permit.

Important Safety Precautions

To avoid loss of control or rollover, be sure to follow all precautions and recommendations.

- Be sure to store cargo properly and do not exceed your cargo load limits (see page 196 and 215).
- Whenever you drive, make sure you and your passengers always wear seat belts.
- Keep your speed low, and never go faster than the conditions allow.
- It's up to you to continually assess the situation and drive within the limits.

Check Out Your Vehicle
Before you leave the pavement, be sure to do all scheduled maintenance and service, and inspect your vehicle for any problems. Pay special attention to the condition of the tires, and check the tire pressures.

After you return to the pavement, carefully inspect your vehicle to make sure there is no damage that could make driving it unsafe. Recheck the condition of the tires and the tire pressures.

Remember
The route presents limits (too steep or bumpy roads). You have limits (driving skill and comfort). And your vehicle has limits (traction, stability, and power).

Driving off-highway can be hazardous if you fail to recognize limits and take the proper precautions.

Accelerating and Braking
For better traction on all surfaces, accelerate slowly and gradually build up speed. If you try to start too fast on wet soil, mud, snow, or ice, you might not have enough traction to get underway, and you may dig yourself a hole. Starting with the shift lever in second (2) gear will help you have a smoother start on snow or ice.

Keep in mind that you will usually need more time and distance to brake to a stop on unpaved surfaces. Avoid hard braking. Do not "pump" the brakes; let the anti-lock braking system pump them for you.

Avoiding Obstacles
Debris in the road can damage your suspension or other components. Because your vehicle has a high center of gravity, driving over a large obstacle, or allowing a wheel to drop into a deep hole can cause your vehicle to tip or roll over.

Driving on Slopes
If you can't clearly see all conditions or obstacles on a slope, walk the slope before you drive on it. If you have any doubt whether or not you can safely drive on the slope, don't do it. Find another route.
If you are driving up a hill and find that you cannot continue, *do not try to turn around*. Your vehicle could roll over. Slowly back down the hill, following the same route you took up the hill.

Crossing a Stream
Before driving through water, stop, get out if necessary, and make sure that:
- The water is not deep enough to cover your wheel hubs, axles, or exhaust pipe. You could stall and not be able to restart your engine. The water can also damage important vehicle components.

- The banks are sloped so you can drive out.
- The water is not flowing too fast. Deep rushing water can sweep you downstream. Even very shallow rushing water can wash the ground from under your tires and cause you to lose traction and possibly roll over.
- The banks and surface under the water provide good traction. The water may hide hazards such as rocks, holes, or mud.

If you decide it is safe to drive through water, choose a suitable speed and engage the VTM-4 Lock. Proceed without shifting or changing speeds, and do not stop the vehicle or shut off the engine.

After driving through water, test your brakes. If they got wet, gently "pump" them while driving slowly until they operate normally.

If the water is deeper than the wheel hubs, some additional service may be required. This service is not covered by your warranties.

If You Get Stuck

If you get stuck, engage the VTM-4 Lock (see page 206). Carefully try to go in the direction (forward or reverse) that you think will get you unstuck. Do not spin the tires at high speeds. It will not help you get out and may cause damage to the transmission or VTM-4 system.

If you are still unable to free yourself, your vehicle is equipped with front and rear tow hooks designed for this purpose.

Use a nylon strap to attach the MDX to the recovery vehicle and carefully take out the slack in the strap. Once the strap is tight, the recovery vehicle should apply force. Remember that the recovery vehicle needs good traction to avoid becoming stuck, too.

You should never use a jack to try to get unstuck. Your vehicle could easily slip off the jack and hurt you or someone else.

Towing a Trailer Off-Road

You may be able to safely tow a lightweight trailer (such as a motorcycle or small tent trailer) off-road if you follow these guidelines.

- Do not exceed 1,000 lbs (450 kg) or a tongue weight of 100 lbs (45 kg).
- Stay on smooth, level dirt roads, and avoid driving in hilly terrain.
- Allow extra room for starting, stopping, and turning.
- Slow down if you encounter bumps or other obstacles.

Maintenance

This section explains why it is important to keep your vehicle well maintained and how to follow basic maintenance safety precautions.

This section also includes Maintenance Schedules for normal driving and severe driving conditions, a Maintenance Record, and instructions for simple maintenance tasks you may want to take care of yourself.

If you have the skills and tools to perform more complex maintenance tasks on your vehicle, you may want to purchase the service manual. See page 299 for information on how to obtain a copy, or see your dealer.

Maintenance Safety 228
Maintenance Schedule 229
Maintenance Record 233
Fluid Locations 236
Adding Engine Oil 237
Changing the Oil and Filter 238
Engine Coolant 240
Windshield Washers 241
Automatic Transmission Fluid 242
Brake Fluid 243
Power Steering Fluid 244
Timing Belt 244
Lights 245
Dust and Pollen Filter 248
Cleaning the Seat Belts 249
Floor Mats 249
Wiper Blades 250
Tires 252
Checking the Battery 257
Vehicle Storage 258

Maintenance Safety

All service items not detailed in this section should be performed by a certified technician or other qualified mechanic.

Important Safety Precautions
To eliminate potential hazards, read the instructions before you begin, and make sure you have the tools and skills required.

- Make sure your vehicle is parked on level ground, the parking brake is set, and the engine is off.
- To clean parts, use a commercially available degreaser or parts cleaner, not gasoline.
- To reduce the possibility of fire or explosion, keep cigarettes, sparks, and flames away from the battery and all fuel-related parts.
- Wear eye protection and protective clothing when working with the battery or compressed air.

⚠WARNING

Improperly maintaining this vehicle or failing to correct a problem before driving can cause a crash in which you can be seriously hurt or killed.

Always follow the inspection and maintenance recommendations in this owner's manual.

Potential Vehicle Hazards
- **Carbon Monoxide poison from engine exhaust.** Be sure there is adequate ventilation whenever you operate the engine.
- **Burns from hot parts.** Let the engine and exhaust system cool before touching any parts.
- **Injury from moving parts.** Do not run the engine unless instructed to do so.

⚠WARNING

Failure to properly follow maintenance instructions and precautions can cause you to be seriously hurt or killed.

Always follow the procedures and precautions in this owner's manual.

Some of the most important safety precautions are given here. However, we cannot warn you of every conceivable hazard that can arise in performing maintenance. Only you can decide whether or not you should perform a given task.

The maintenance schedule assumes you will use your vehicle as normal transportation for passengers and their possessions. You should also follow these recommendations:

- Avoid exceeding your vehicle's load limit. This puts excess stress on the engine, brakes, and many other vehicle parts. The load limit is shown on the tire information label on the driver's doorjamb.
- Operate your vehicle on reasonable roads within the legal speed limit.
- Drive your vehicle regularly over a distance of several miles (kilometers).
- Always use unleaded gasoline with the proper octane rating (see page 188).
- Used primarily as a delivery vehicle or taxi that is driven mostly in stop-and-go traffic and/or parked with the engine idling.

Which Schedule to Follow
Service your vehicle according to the time and mileage periods on one of the Maintenance Schedules on the following pages.

U.S. Owners — Follow the maintenance schedule for severe conditions if you drive your vehicle MAINLY under one or more of the following conditions:

- Driving less than 5 miles (8 km) per trip, or in freezing temperatures, driving less than 10 miles (16 km) per trip.
- Driving in extremely hot [over 90°F (32°C)] conditions.
- Trailer towing, driving with a roof rack, or driving in mountainous conditions.
- Driving on muddy, dusty, or de-iced roads.

NOTE: If you only OCCASIONALLY drive under a "severe" condition, you should follow the Maintenance Schedule for Normal Conditions.

Canadian Owners — Follow the Maintenance Schedule for Severe Conditions.

Maintenance Schedule

Servicing Your Vehicle
Your authorized Acura dealer knows your vehicle best and can provide competent, efficient service. However, service at a dealer is not mandatory to keep your warranties in effect. Maintenance may be done by any qualified service facility or skilled person to keep your warranties in effect. Keep all the receipts as proof of completion, and have the person who does the work fill out the Maintenance Record. Check your warranty booklet for more information.

We recommend the use of Acura parts and fluids whenever you have maintenance done.

U.S. Vehicles: **Maintenance, replacement, or repair of emissions control devices and systems may be done by any automotive repair establishment or individual using parts that are "certified" to EPA standards.**

According to state and federal regulations, failure to perform maintenance on the items marked with # will not void your emissions warranties. However, all maintenance services should be performed at the recommended time or mileage period to ensure long-term reliability.

Owner's Maintenance Checks
You should check the following items at the specified intervals. If you are unsure of how to perform any check, turn to the appropriate page listed.

- Engine oil level — Check every time you fill the fuel tank. See page 191 .
- Engine coolant level — Check the radiator reserve tank every time you fill the fuel tank. See page 192 .
- Automatic transmission — Check the fluid level monthly. See page 242 .
- Brakes — Check the fluid level monthly. See page 243 .
- Tires — Check the tire pressure monthly. Examine the tread for wear and foreign objects. See page 253 .
- Lights — Check the operation of the headlights, parking lights, taillights, high-mount brake light, turn signals, brake lights, and license plate light monthly. See page 245 .

Service the items listed at the indicated distance (or time, if given).											
	miles x 1,000	15	30	45	60	75	90	105	120	135	150
	km x 1,000	24	48	72	96	120	144	168	192	216	240
Check engine oil and coolant		Check oil and coolant at each fuel stop									
Check tires		Check inflation and condition once a month									
Replace engine oil		Every 7,500 miles (12,000 km) or every 1 year, whichever comes first									
Rotate tires (follow pattern on page 254)		Every 7,500 miles (12,000 km)									
Replace engine oil filter Check front and rear brakes Check parking brake adjustment Inspect the following items: Tie-rod ends, steering gearbox, and boots Suspension components Driveshaft boots Brake hoses and lines (including ABS) All fluid levels and condition of fluids Exhaust system# Fuel lines and connections#		●	●	●	●	●	●	●	●	●	●
					(Or every 1 year, whichever comes first)						
Inspect drive belts Replace dust and pollen filter			●		●		●		●		●
					(Or every 2 years, whichever comes first)						
Replace air cleaner element			●		●		●		●		●
Inspect valve clearance								●			
					(Otherwise adjust only if noisy)						
Replace automatic transmission fluid*1 Replace transfer fluid*1				●		●		●		●	
Replace VTM-4 rear differential fluid*2		●	●		●		●		●		●
Inspect idle speed Replace spark plugs								●			
Replace timing belt and inspect water pump								●			
					(Or every 7 years, whichever comes first)						
Replace engine coolant		At 120,000 miles (192,000 km) or 10 years, then every 60,000 miles (96,000 km) or 5 years									
Replace brake fluid		Every 3 years (independent of mileage)									

*1: At 45,000 miles (72,000 km) or 3 years, then every 30,000 miles (48,000 km) or 2 years.
*2: At every 15,000 miles (24,000 km) up to 30,000 miles (48,000 km) or every 1 year, then every 30,000 miles (48,000 km) or 2 years.
#: See information on maintenance and emissions warranty, middle column, page 230.

Service the items listed at the indicated distance (or time, if given).											
	miles x 1,000	7.5	15	30	45	60	75	90	105	120	135	150
	km x 1,000	12	24	48	72	96	120	144	168	192	216	240
Check engine oil and coolant		Check oil and coolant at each fuel stop										
Check tires		Check inflation and condition once a month										
Replace engine oil and oil filter		Every 3,750 miles (6,000 km) or every 6 months, whichever comes first										
Rotate tires (follow pattern on page 254)		Every 7,500 miles (12,000 km)										
Check front and rear brakes Inspect the following items: Tie-rod ends, steering gearbox, and boots Suspension components, Driveshaft boots		Every 7,500 miles (12,000 km) or every 6 months, whichever comes first										
Check parking brake adjustment Lubricate all hinges, locks and latches Inspect the following items: Brake hoses and lines (including ABS) All fluid levels and condition of fluids Exhaust system# Fuel lines and connections# Lights and controls/vehicle underbody			●	●	●	●	●	●	●	●	●	●
		(Or every 1 year, whichever comes first)										
Inspect drive belts Replace dust and pollen filter (see page 248) Replace automatic transmission fluid Replace transfer fluid				●		●		●		●		●
		(Or every 2 years, whichever comes first)										
Replace air cleaner element		Every 15,000 miles (24,000 km) (Use normal schedule except in dusty conditions)										
Inspect valve clearance									●			
		(Otherwise adjust only if noisy)										
Replace VTM-4 rear differential fluid*1, *2		●	●	●	●	●	●	●	●	●	●	●
Inspect idle speed Replace spark plugs									●			
Replace timing belt#, *3, and inspect water pump									●			
		(Or every 7 years, whichever comes first)										
Replace engine coolant		At 120,000 miles (192,000 km) or 10 years, then every 60,000 miles (96,000 km) or 5 years										
Replace brake fluid		Every 3 years (independent of mileage)										

*1 : At every 7,500 miles (12,000 km) up to 15,000 miles (24,000 km) or every 6 months, then every 15,000 miles (24,000 km) or 1 year.

*2 : Follow this schedule for rear differential fluid replacement if you use your vehicle for off-highway driving, trailer towing, mainly in stop-and-go driving. Otherwise, use the fluid replacement schedule in the Maintenance Schedule for Normal Conditions.

*3 : See timing belt on page 244 for replacement information under special driving conditions.

: See information on maintenance and emissions warranty, middle column, page 230.

Maintenance Record *(for Normal and Severe Schedules)*

You or the servicing dealer can record all completed maintenance here, whether you follow the schedule for normal conditions (page 231) or severe conditions (page 232). Keep the receipts for all work done on your vehicle.

3,750 mi 6,000 km	Signature or dealer stamp	mi/km Date
7,500 mi 12,000 km		mi/km Date
11,250 mi 18,000 km		mi/km Date
15,000 mi 24,000 km		mi/km Date
18,750 mi 30,000 km		mi/km Date
22,500 mi 36,000 km		mi/km Date
26,250 mi 42,000 km		mi/km Date
30,000 mi 48,000 km		mi/km Date

33,750 mi 54,000 km	Signature or dealer stamp	mi/km Date
37,500 mi 60,000 km		mi/km Date
41,250 mi 66,000 km		mi/km Date
45,000 mi 72,000 km		mi/km Date
48,750 mi 78,000 km		mi/km Date
52,500 mi 84,000 km		mi/km Date
56,250 mi 90,000 km		mi/km Date
60,000 mi 96,000 km		mi/km Date

CONTINUED

Maintenance Record *(for Normal and Severe Schedules)*

63,750 mi 102,000 km	Signature or dealer stamp	mi/km Date
67,500 mi 108,000 km		mi/km Date
71,250 mi 114,000 km		mi/km Date
75,000 mi 120,000 km		mi/km Date
78,750 mi 126,000 km		mi/km Date
82,500 mi 132,000 km		mi/km Date
86,250 mi 138,000 km		mi/km Date
90,000 mi 144,000 km		mi/km Date

93,750 mi 150,000 km	Signature or dealer stamp	mi/km Date
97,500 mi 156,000 km		mi/km Date
101,250 mi 162,000 km		mi/km Date
105,000 mi 168,000 km		mi/km Date
108,750 mi 174,000 km		mi/km Date
112,500 mi 180,000 km		mi/km Date
116,250 mi 186,000 km		mi/km Date
120,000 mi 192,000 km		mi/km Date

123,750 mi 198,000 km	Signature or dealer stamp	mi/km Date
127,500 mi 204,000 km		mi/km Date
131,250 mi 210,000 km		mi/km Date
135,000 mi 216,000 km		mi/km Date
138,750 mi 222,000 km		mi/km Date
142,500 mi 228,000 km		mi/km Date
146,250 mi 234,000 km		mi/km Date
150,000 mi 240,000 km		mi/km Date

Fluid Locations

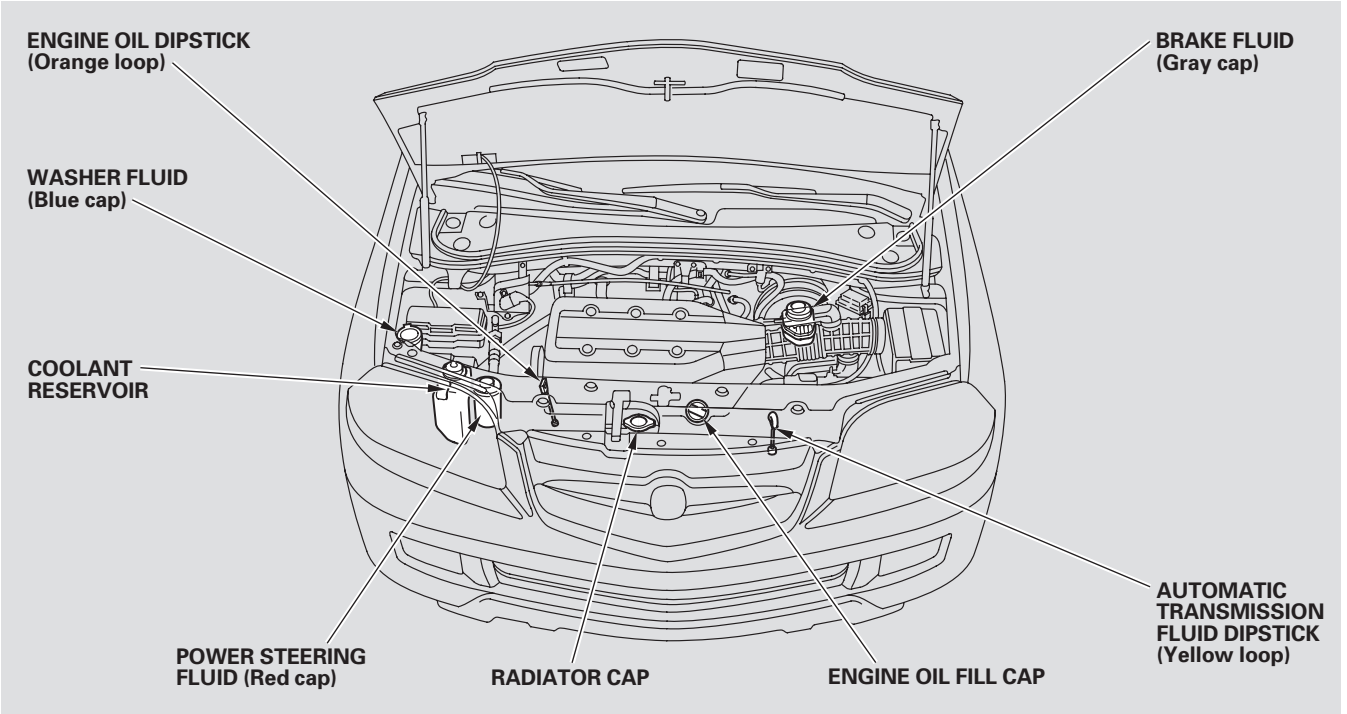

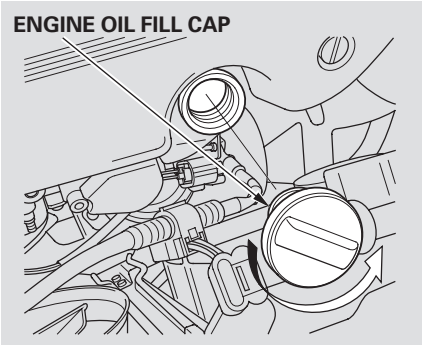

Unscrew and remove the engine oil fill cap on top of the valve cover. Pour in the oil slowly and carefully so you do not spill. Clean up any spills immediately. Spilled oil could damage components in the engine compartment. Install the engine oil fill cap, and tighten it securely. Wait a few minutes, and recheck the oil level (see page 191). Do not fill above the upper mark; you could damage the engine.

Recommended Engine Oil

Oil is a major contributor to your engine's performance and longevity. Always use a premium-grade 5W-20 detergent oil displaying the API Certification Seal. This seal indicates the oil is energy conserving, and that it meets the American Petroleum Institute's latest requirements. It is highly recommended that you use Honda motor oil in your vehicle. Make sure the API Certification Seal says "For Gasoline Engines."

API CERTIFICATION SEAL

The oil viscosity or weight is provided on the container's label. 5W-20 oil is formulated for year-round protection of your vehicle to improve cold weather starting and fuel economy.

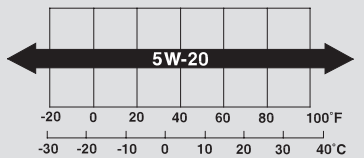

Ambient Temperature

Adding Engine Oil, Changing the Oil and Filter

Synthetic Oil
You may use a synthetic motor oil if it meets the same requirements given for a conventional motor oil, it displays the API Certification Seal and it is the proper weight. You must follow the oil and filter change intervals given in the maintenance schedule.

Engine Oil Additives
Your vehicle does not require any oil additives. Additives may adversely affect the engine or transmission performance and durability.

Changing the Oil and Filter
Always change the oil and filter according to the recommendations in the maintenance schedule. The oil and filter collect contaminants that can damage your engine if they are not removed regularly.

Changing the oil and filter requires special tools and access from underneath the vehicle. The vehicle should be raised on a service station-type hydraulic lift for this service. Unless you have the knowledge and proper equipment, you should have this maintenance done by a skilled mechanic.

1. Run the engine until it reaches normal operating temperature, then shut it off.

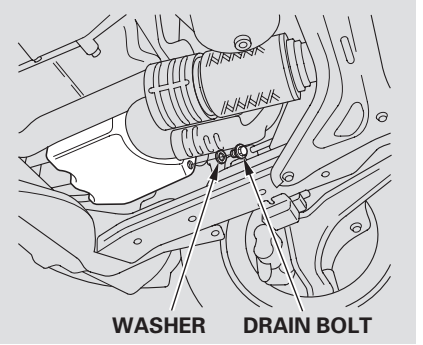

2. Open the hood, and remove the engine oil fill cap. Remove the oil drain bolt and washer from the bottom of the engine. Drain the oil into an appropriate container.

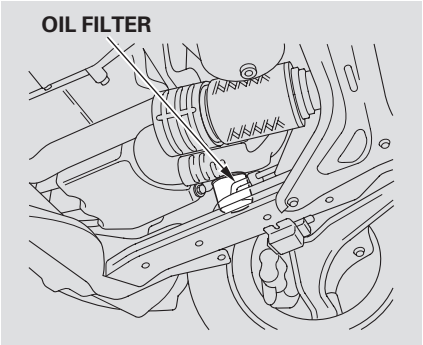

3. Remove the oil filter, and let the remaining oil drain. A special wrench (available from your dealer) is required.

4. Check the oil filter to make sure its gasket did not stick to the engine block. A stuck gasket could cause an oil leak.

5. Install a new oil filter according to the instructions that come with it.

6. Put a new washer on the drain bolt, then reinstall the drain bolt. Tighten the drain bolt to:
   29 lbf·ft (39 N·m , 4.0 kgf·m)

7. Refill the engine with the recommended oil.

   Engine oil change capacity (including filter):
   4.5 US qt (4.3 ℓ)

8. Reinstall the engine oil fill cap. Start the engine. The oil pressure indicator should go out within 5 seconds. If it does not, turn off the engine, and check your work.

9. Let the engine run for several minutes, then check the drain bolt and oil filter for leaks.

10. Turn off the engine and let it sit for several minutes, then check the oil level on the dipstick. If necessary, add more oil.

NOTICE

Improper disposal of engine oil can be harmful to the environment. If you change your own oil, please dispose of the used oil properly. Put it in a sealed container, and take it to a recycling center. Do not discard it in a trash bin or dump it on the ground.

Engine Coolant

Adding Engine Coolant

If the coolant level in the reserve tank is at or below the MIN line, add coolant to bring it up to between the MIN and MAX lines. Inspect the cooling system for leaks.

Always use Honda All Season Antifreeze/Coolant Type 2. This coolant is pre-mixed with 50 percent antifreeze and 50 percent water. Never add straight antifreeze or plain water.

If Honda antifreeze/coolant is not available, you may use another major-brand non-silicate coolant as a temporary replacement. Make sure it is a high-quality coolant recommended for aluminum engines. Continued use of any non-Honda coolant can result in corrosion, causing the cooling system to malfunction or fail. Have the cooling system flushed and refilled with Honda antifreeze/coolant as soon as possible.

If the reserve tank is completely empty, you should also check the coolant level in the radiator.

⚠WARNING

Removing the radiator cap while the engine is hot can cause the coolant to spray out, seriously scalding you.

Always let the engine and radiator cool down before removing the radiator cap.

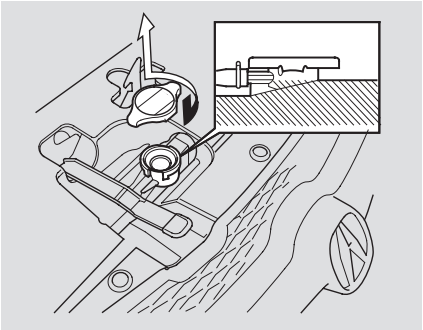

1. Make sure the engine and radiator are cool.

   When the radiator and engine are cool, relieve any pressure in the cooling system by turning the radiator cap counterclockwise, without pressing down.

2. Remove the radiator cap by pushing down and turning counterclockwise.

3. The coolant level should be up to the base of the filler neck. Add coolant if it is low.

   Pour the coolant slowly and carefully so you do not spill any. Clean up any spill immediately; it could damage components in the engine compartment.

4. Put the radiator cap back on, and tighten it fully.

5. Pour coolant into the reserve tank. Fill it to halfway between the MAX and MIN marks. Put the cap back on the reserve tank.

Do not add any rust inhibitors or other additives to your vehicle's cooling system. They may not be compatible with the coolant or engine components.

Windshield Washers

Check the fluid level in the windshield washer reservoir at least monthly during normal use.

The washer level indicator will come on when the level is low (see page 63).

Fill the reservoir with a good-quality windshield washer fluid. This increases the cleaning capability and prevents freezing in cold weather.

When you refill the reservoir, clean the edges of the windshield wiper blades with windshield washer fluid on a clean cloth. This will help to condition them.

NOTICE

Do not use engine antifreeze or a vinegar/water solution in the windshield washer reservoir. Antifreeze can damage your vehicle's paint, while a vinegar/water solution can damage the windshield washer pump. Use only commercially-available windshield washer fluid.

Automatic Transmission Fluid

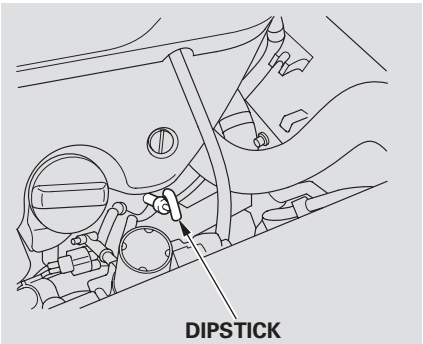

Check the fluid level with the engine at normal operating temperature.

1. Park the vehicle on level ground. Shut off the engine.

2. Remove the dipstick (yellow loop) from the transmission, and wipe it with a clean cloth.

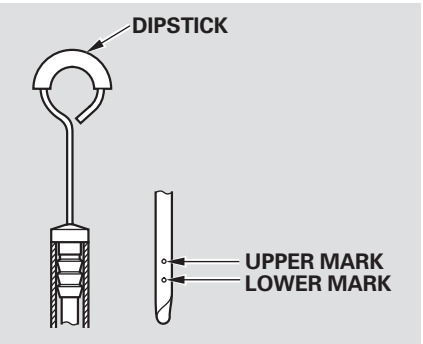

3. Insert the dipstick all the way into the transmission as shown.

4. Remove the dipstick and check the fluid level. It should be between the upper and lower marks.

5. If the level is below the lower mark, remove the fill plug and add fluid into the tube to bring it to the upper mark.

Pour the fluid slowly and carefully so you do not spill any. Clean up any spill immediately; it could damage components in the engine compartment.

Always use Honda ATF-Z1 (automatic transmission fluid).
If it's not available, you may use a DEXRON® III automatic transmission fluid as a temporary replacement. However, continued use can affect the shift quality. Have the transmission flushed and refilled with Honda ATF-Z1 as soon as it is convenient.

To thoroughly flush the transmission, the technician should drain and refill it with Acura ATF-Z1 (Automatic Transmission Fluid), then drive the vehicle for a short distance. Do this three times. Then drain and refill the transmission a final time.

6. Insert the dipstick all the way back in the transmission.

The transmission should be drained and refilled with new fluid according to the time and distance recommendations in the maintenance schedule.

If you are not sure how to add fluid, contact your dealer.

Brake Fluid

Check the fluid level in the brake fluid reservoir monthly. Replace it according to the maintenance schedule recommendations.

Always use Honda Heavy Duty Brake Fluid DOT 3. If it is not available, you should use only DOT 3 or DOT 4 fluid, from a sealed container, as a temporary replacement.

Using any non-Honda brake fluid can cause corrosion and decrease the life of the system. Have the brake system flushed and refilled with Honda Heavy Duty Brake Fluid DOT 3 as soon as possible.

Brake fluid marked DOT 5 is not compatible with your vehicle's braking system and can cause extensive damage.

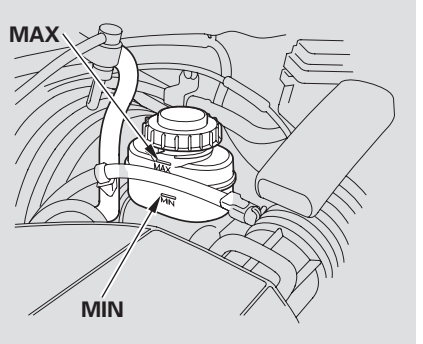

The fluid level should be between the MIN and MAX marks on the side of the reservoir. If the level is at or below the MIN mark, your brake system needs attention. Have the brake system inspected for leaks or worn brake pads.

Power Steering Fluid, Timing Belt

Power Steering Fluid

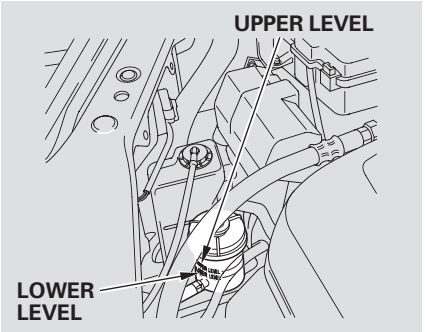

Check the level on the side of the reservoir when the engine is cold. The fluid should be between the UPPER LEVEL and LOWER LEVEL. If not add power steering fluid to the UPPER LEVEL mark.

Pour the fluid slowly and carefully so you do not spill any. Clean up any spill immediately; it could damage components in the engine compartment.

Always use Honda Power Steering Fluid. You may use another power steering fluid as an emergency replacement, but have the power steering system flushed and refilled with Honda PSF as soon as possible.

A low power steering fluid level can indicate a leak in the system. Check the fluid level frequently, and have the system inspected as soon as possible.

NOTICE

Turning the steering wheel to full left or right lock and holding it there can damage the power steering pump.

Timing Belt

The timing belt should be replaced at the intervals shown in the maintenance schedule.

Replace the belt at 60,000 miles (100,000 km) if you regularly drive your vehicle in one or more of these conditions:

- In very high temperatures (over 110°F, 43°C).
- In very low temperatures (under −20°F, −29°C).
- Frequently tow a trailer.

Headlight Aiming

The headlights were properly aimed when your vehicle was new. If you regularly carry heavy items in the cargo area or pull a trailer, readjustment may be required. Adjustment should be done by your dealer or other qualified mechanic.

Replacing a Headlight Bulb

Your vehicle has halogen headlight bulbs, two on each side. When replacing a bulb, handle it by its base and protect the glass from contact with your skin or hard objects. If you touch the glass, clean it with denatured alcohol and a clean cloth.

NOTICE

Halogen headlight bulbs get very hot when lit. Oil, perspiration, or a scratch on the glass can cause the bulb to overheat and shatter.

1. Open the hood.

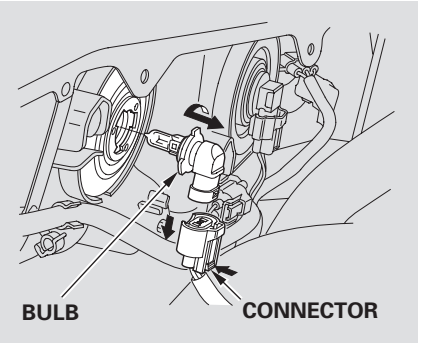

2. Remove the electrical connector from the bulb by squeezing the connector to unlock the tab, then slide the connector off the bulb.

3. Remove the bulb by turning it approximately one-quarter turn counterclockwise.

CONTINUED

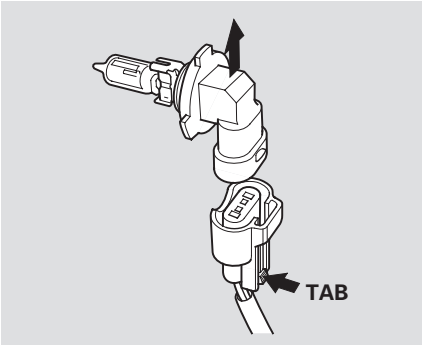

4. Insert the new bulb into the hole, and turn it one-quarter turn clockwise to lock it in place.

5. Push the electrical connector onto the new bulb.

6. Turn on the headlights to test the new bulb.

Replacing Front Turn Signal/ Parking and Side Marker Light Bulbs

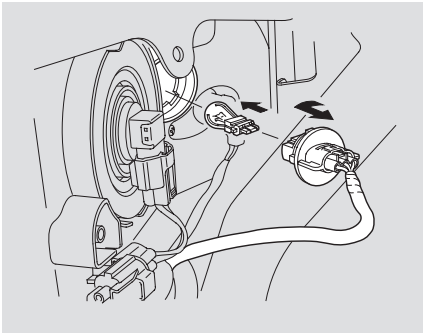

1. Remove the socket from the headlight assembly by turning it one-quarter turn counterclockwise.

2. To remove a bulb, pull it straight out of its socket.

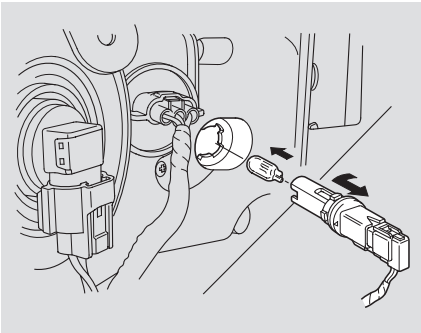

3. Install the new bulb into the socket.

4. Insert the socket back into the headlight assembly. Turn it clockwise to lock it in place.

5. Test the lights to make sure the new bulb is working.

Replacing Rear Bulbs

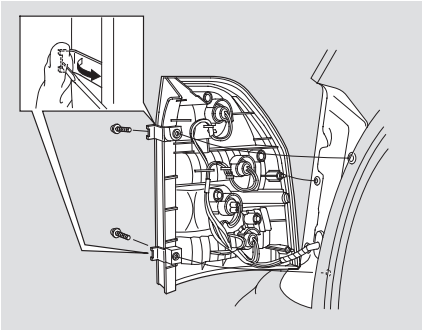

1. Open the tailgate. Use a screwdriver protected with a cloth to pry open the two covers.

2. Remove the two screws and remove the rear light assembly from the rear pillar.

3. Determine which of the four bulbs is burned out: brake/taillight, turn signal/hazard lights, side marker light, or back-up light.

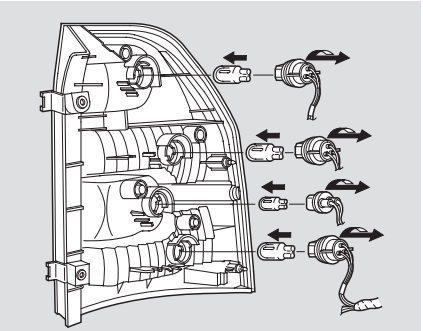

4. Remove the socket by turning it one-quarter turn counterclockwise.

5. Remove the burned-out bulb by pulling it straight out of the socket.

6. Install the new bulb into the socket.

7. Push the socket into the light assembly, and turn it clockwise until it locks.

8. Test the lights to make sure the new bulb is working.

9. Install the rear light assembly in the body. Tighten the two screws. Snap the covers back into position.

Lights, Dust and Pollen Filter

Replacing a High-mount Brake Light Bulb

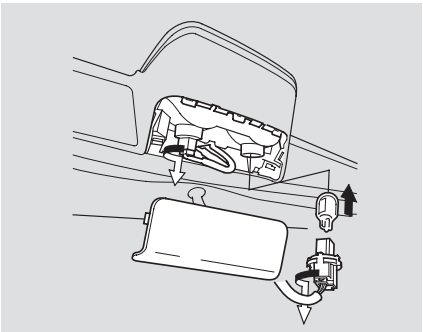

1. Remove the light assembly cover by prying carefully with a cloth-covered screwdriver in the notches along the top edge. Then pivot the cover out and down.

2. Remove the socket from the light assembly by turning it one-quarter turn counterclockwise.

3. Pull the bulb straight out of its socket. Push the new bulb straight into the socket until it bottoms.

4. Test the lights to make sure the new bulb is working.

5. Put the socket back into the light assembly, and turn it clockwise to lock it in place.

6. Place the cover back into the light assembly. Push it up until it locks in place.

Dust and Pollen Filter

This filter removes the dust and pollen that is brought in from the outside through the heating and cooling system.

Have your dealer replace this filter every 30,000 miles (48,000 km) under normal conditions. It should be replaced every 15,000 miles (24,000 km) if you drive primarily in urban areas that have high concentrations of soot in the air, or if the airflow from the heating and cooling system is less than usual.

Cleaning the Seat Belts

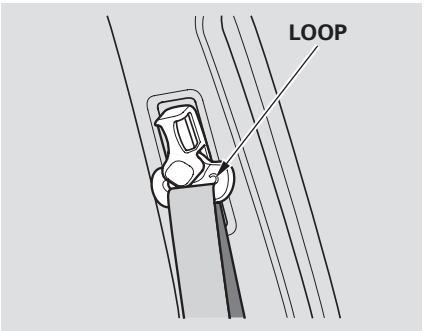

If your seat belts get dirty, use a soft brush with a mixture of mild soap and warm water to clean them. Do not use bleach, dye, or cleaning solvents. Let the belts air-dry before you use the vehicle.
Dirt build-up in the loops of the seat belt anchors can cause the belts to retract slowly. Wipe the insides of the loops with a clean cloth dampened in mild soap and warm water or isopropyl alcohol.

Floor Mats

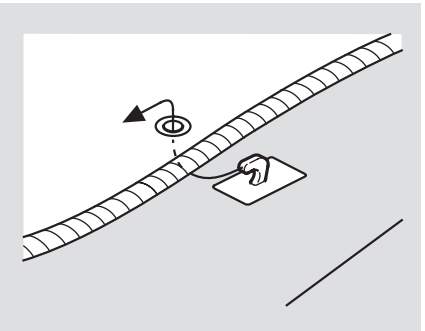

The floor mats that came with your vehicle hook over the floor mat anchors. This keeps them from sliding forward and possibly interfering with vehicle operation.

If you remove a floor mat, make sure to re-anchor it when you put it back in your vehicle.

If you use an aftermarket floor mat, make sure it fits properly and that it can be used with the floor mat anchors. Do not put additional floor mats on top of the anchored mats.

Wiper Blades

Check the condition of the wiper blades at least every 6 months. Replace them if you find signs of cracking in the rubber, and areas that are getting hard or if they leave streaks and unwiped areas when used.

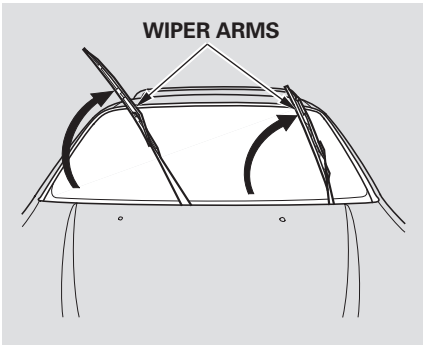

To replace a wiper blade:

1. Raise the wiper arm off the windshield.
   Windshield: Raise the driver's side first, then the passenger's side.

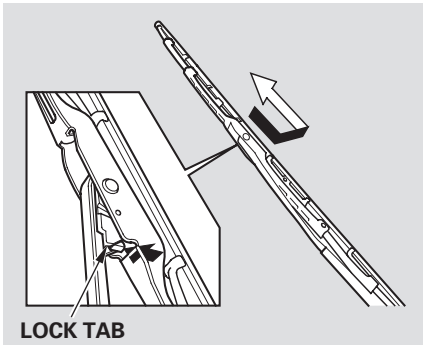

2. Front only:
   Disconnect the blade assembly from the wiper arm by pushing in the lock tab. Hold the lock tab in while you push the blade assembly toward the base of the arm.

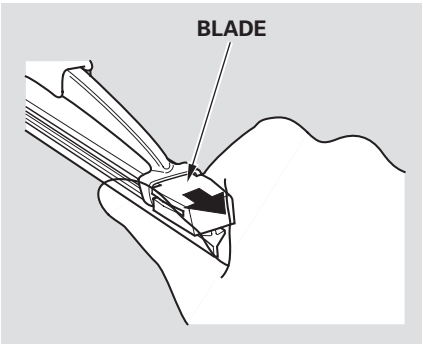

3. Remove the blade from its holder by grasping the tabbed end of the blade. Pull firmly until the tabs come out of the holder.

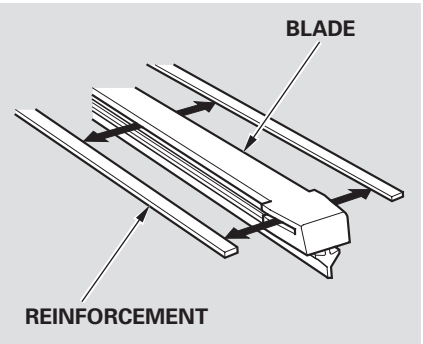

4. Examine the new wiper blades. If they have no plastic or metal reinforcement along the back edge, remove the metal reinforcement strips from the old wiper blade, and install them in the slots along the edge of the new blade.

5. Slide the new wiper blade into the holder until the tabs lock.

6. Front only:
   Slide the wiper blade assembly onto the wiper arm. Make sure it locks in place.

7. Lower the wiper arm against the window.
   Windshield: Lower the passenger's side first, then the driver's side.

Tires

To safely operate your vehicle, your tires must be the proper type and size, in good condition with adequate tread, and correctly inflated.

The following pages give more detailed information on how to take care of your tires and what to do when they need to be replaced.

⚠WARNING

Using tires that are excessively worn or improperly inflated can cause a crash in which you can be seriously hurt or killed.

Follow all instructions in this owner's manual regarding tire inflation and maintenance.

Inflation Guidelines

Keeping the tires properly inflated provides the best combination of handling, tread life, and riding comfort.

- Underinflated tires wear unevenly, adversely affect handling and fuel economy, and are more likely to fail from being overheated.
- Overinflated tires can make your vehicle ride more harshly, are more prone to damage from road hazards, and wear unevenly.

The tire pressure monitoring system (TPMS) will warn you when a tire pressure is low. See page 207 for information on the TPMS.

We recommend that you visually check your tires every day. If you think a tire might be low, check it immediately with a tire gauge.

Tire Size	Cold Tire Pressure for Normal Driving
P235/65R17 103T	32 psi (220 kPa , 2.2 kgf/cm²)

The compact spare tire pressure is: 60 psi (420 kPa , 4.2 kgf/cm²)

For convenience, the recommended tire sizes and cold tire pressures are on a label on the driver's doorjamb.

Tire pressure for high speed driving is the same as for normal driving.

For additional technical information about your tires, see page 288 .

Use a gauge to measure the air pressure in each type at least once a month. Even tires that are in good condition may lose one to two psi (10 to 20 kPa, 0.1 to 0.2 kgf/cm²) per month. Remember to check the spare tire at the same time.

Check the pressure in the tires when they are cold. This means the vehicle has been parked for at least three hours, or driven less than 1 mile (1.6 km). Add or release air, if needed, to match the recommended cold tire pressure.

If you check the pressure when the tires are hot [driven for several miles (kilometers)], you will see readings 4 to 6 psi (30 to 40 kPa, 0.3 to 0.4 kgf/cm²) higher than the cold reading. This is normal; do not release air to match the cold pressure.

Tubeless tires have some ability to self-seal if they are punctured. You should look closely for punctures if a tire starts losing pressure.

You should get your own tire pressure gauge and use it whenever you check your tire pressures. This will make it easier for you to tell if a pressure loss is due to a tire problem and not due to a variation between gauges.

Tire Inspection

Every time you check inflation, you should also examine the tires for damage, foreign objects, and wear.

You should look for:

- Bumps or bulges in the tread or side of the tire. Replace the tire if you find either of these conditions.
- Cuts, splits, or cracks in the side of the tire. Replace the tire if you can see fabric or cord.
- Excessive tread wear.

Tires

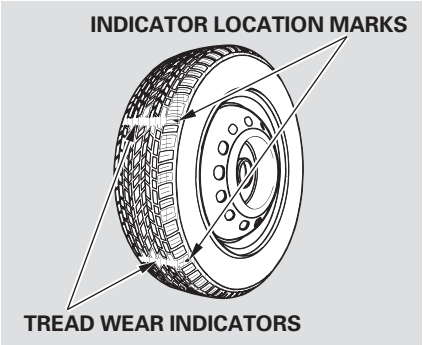

Your vehicle's tires have wear indicators molded into the tread. When the tread wears down to that point, you will see a 1/2 inch (12.7 mm) wide band running across the tread. This shows there is less than 1/16 inch (1.6 mm) of tread left on the tire. A tire that is this worn gives very little traction on wet roads. You should replace the tire if you can see the tread wear indicator in three or more places around the tire.

Tire Maintenance

In addition to proper inflation, correct wheel alignment helps to decrease tire wear. If you find a tire is worn unevenly, have your dealer check the wheel alignment.

Have your dealer check the tires if you feel a consistent vibration while driving. A tire should always be rebalanced if it is removed from the wheel. When you have new tires installed, make sure they are balanced. This increases riding comfort and tire life. For best results, have the installer perform a dynamic balance.

NOTICE

Improper wheel weights can damage your vehicle's aluminum wheels. Use only Acura wheel weights for balancing.

Tire Rotation

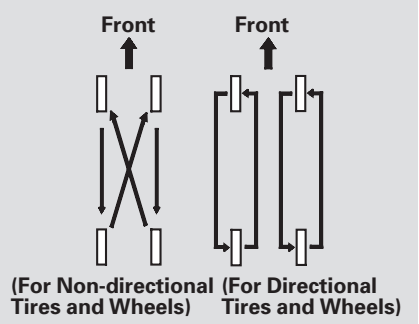

To help increase tire life and distribute wear more evenly, rotate the tires every 7,500 miles (12,000 km). Move the tires to the positions shown in the chart each time they are rotated. If you purchase directional tires, rotate only front-to-back.

Replacing Tires and Wheels
Replace your tires with radial tires of the same size, load range, speed rating, and maximum cold tire pressure rating (as shown on the tire's sidewall).

Mixing radial and bias-ply tires on your vehicle can reduce braking ability, traction, and steering accuracy. Using tires of a different size or construction can cause the ABS and vehicle stability assist system (VSA) to work inconsistently.

It is best to replace all four tires at the same time. If that is not possible or necessary, replace the two front tires or two rear tires as a pair. Replacing just one tire can seriously affect your vehicle's handling.

If you ever replace a wheel, make sure that the wheel's specifications match those of the original wheels.

Also be sure you use only TPMS specific wheels. If you do not, the tire pressure monitoring system will not work on that tire.

Replacement wheels are available at your Acura dealer.

⚠ WARNING

Installing improper tires on your vehicle can affect handling and stability. This can cause a crash in which you can be seriously hurt or killed.

Always use the size and type of tires recommended in this owner's manual.

Wheel and Tire Specifications
Wheel:
17 x 6 1/2 JJ

Tires:
P235/65R17 103T

See page 286 for DOT tire quality grading information, and page 288 for tire size explanation.

Winter Driving
Tires marked "M + S" or "All Season" on the sidewall have an all-weather tread design suitable for most winter driving conditions.

For the best performance in snowy or icy conditions, you should install snow tires or tire chains. They may be required by local laws under certain conditions.

Snow Tires
If you mount snow tires on your vehicle, make sure they are radial tires of the same size and load range as original tires. Mount snow tires on all four wheels. The traction provided by snow tires on dry roads may be lower than your original tires. Check with the tire dealer for maximum speed recommendations.

Tire Chains
Because your vehicle has limited tire clearance, mount only SAE Class "S" cable-type traction devices, with rubber chain tensioners, on the front tires. Do not use any chains on the rear wheels. Use traction devices only when required by driving conditions or local laws. Make sure they are the correct size for your tires. Metal link-type "chains" should not be used.
When installing cables, follow the manufacturer's instructions, and mount them as tight as you can. Make sure they are not contacting the brake lines or suspension. Drive slowly with them installed. If you hear them coming into contact with the body or chassis, stop and investigate. Remove them as soon as you begin driving on cleared roads.

NOTICE

Traction devices that are the wrong size or improperly installed can damage your vehicle's brake lines, suspension, body, and wheels. Stop driving if they are hitting any part of the vehicle.

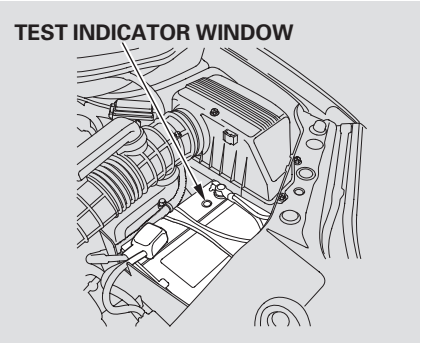

Check the condition of the battery monthly by looking at the test indicator window. The label on the battery explains the test indicator's colors.

Check the terminals for corrosion (a white or yellowish powder). To remove it, cover the terminals with a solution of baking soda and water. It will bubble up and turn brown. When this stops, wash it off with plain water. Dry off the battery with a cloth or paper towel. Coat the terminals with grease to help prevent further corrosion.

If additional battery maintenance is needed, see your dealer or a qualified technician.

WARNING: Battery posts, terminals, and related accessories contain lead and lead compounds. **Wash your hands after handling.**

If you need to connect the battery to a charger, disconnect both cables to prevent damaging your vehicle's electrical system. Always disconnect the negative (−) cable first, and reconnect it last.

⚠ WARNING

The battery gives off explosive hydrogen gas during normal operation.

A spark or flame can cause the battery to explode with enough force to kill or seriously hurt you.

Wear protective clothing and a face shield, or have a skilled mechanic do the battery maintenance.

Vehicle Storage

If you need to park your vehicle for an extended period (more than 1 month), there are several things you should do to prepare it for storage. Proper preparation helps prevent deterioration and makes it easier to get your vehicle back on the road. If possible, store your vehicle indoors.

- Fill the fuel tank.
- Change the engine oil and filter.
- Wash and dry the exterior completely.
- Clean the interior. Make sure the carpeting, floor mats, etc., are completely dry.
- Leave the parking brake off. Put the transmission in Park.
- Block the rear wheels.
- If the vehicle is to be stored for a longer period, it should be supported on jackstands so the tires are off the ground.
- Leave one window open slightly (if the vehicle is being stored indoors).
- Disconnect the battery.
- Support the front and rear wiper blade arms with a folded towel or rag so they do not touch the windshield.
- To minimize sticking, apply a silicone spray lubricant to all door and tailgate seals. Also, apply a vehicle body wax to the painted surfaces that mate with the door and tailgate seals.
- Cover the vehicle with a "breathable" cover, one made from a porous material such as cotton. Non-porous materials, such as plastic sheeting, trap moisture, which can damage the paint.
- If possible, periodically run the engine until it reaches full operating temperature (the cooling fans cycle on and off twice). Preferably, do this once a month.

If you store your vehicle for 12 months or longer, have your dealer perform the inspections called for in the 24 months/30,000 miles (48,000 km) maintenance schedule (Normal Conditions) as soon as you take it out of storage (see page 231). The replacements called for in the maintenance schedule are not needed unless the vehicle has actually reached that time or mileage.

Taking Care of the Unexpected

This section covers the more common problems that motorists experience with their vehicles. It gives you information about how to safely evaluate the problem and what to do to correct it. If the problem has stranded you on the side of the road, you may be able to get going again. If not, you will also find instructions on getting your vehicle towed.

Compact Spare Tire..... 260
Changing a Flat Tire 261
If Your Engine Won't Start..... 267
Jump Starting 268
If Your Engine Overheats..... 270
Low Oil Pressure Indicator 272
Charging System Indicator..... 272
Malfunction Indicator Lamp 273
Brake System Indicator 274
Emergency Towing 275
Fuses 276
Fuse Locations 279

Compact Spare Tire

Use the compact spare tire as a temporary replacement only. Get your regular tire repaired or replaced, and put it back on your vehicle as soon as you can.

Check the inflation pressure of the compact spare tire every time you check the other tires. It should be inflated to:
60 psi (420 kPa , 4.2 kgf/cm^2)

Follow these precautions:

- Never exceed 50 mph (80 km/h) under any circumstances.
- This tire gives a harsher ride and less traction on some road surfaces. Use greater caution while driving.
- Do not mount snow chains on a compact spare.
- Do not use the compact spare tire if you are towing a trailer.
- Do not use your compact spare tire on another vehicle unless it is the same make and model.

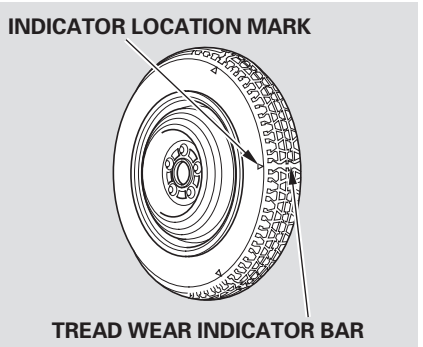

Replace the tire when you can see the tread wear indicator bars. The replacement should be the same size and design tire, mounted on the same wheel. The spare tire is not designed to be mounted on a regular wheel, and the spare wheel is not designed for mounting a regular tire.

If you have a flat tire while driving, stop in a safe place to change it. Drive slowly along the shoulder until you get to an exit or an area to stop that is far away from the traffic lanes.

⚠WARNING

The vehicle can easily roll off the jack, seriously injuring anyone underneath.

Follow the directions for changing a tire exactly, and never get under the vehicle when it is supported only by the jack.

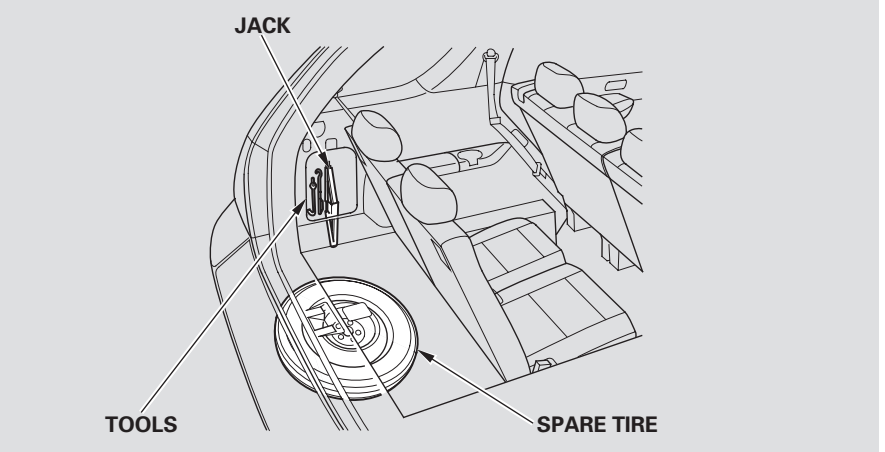

1. Park the vehicle on firm, level, and non-slippery ground. Put the transmission in Park. Apply the parking brake.
2. Turn on the hazard warning lights, and turn the ignition switch to the LOCK (0) position. Have all passengers get out of the vehicle while you change the tire.

CONTINUED

Changing a Flat Tire

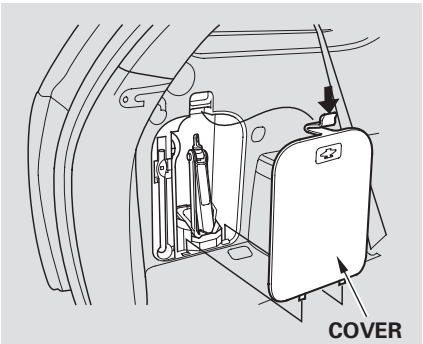

3. Open the tailgate.

4. The tools and jack are behind a cover in the cargo area on the driver's side. Remove the cover by pushing the top of the cover.

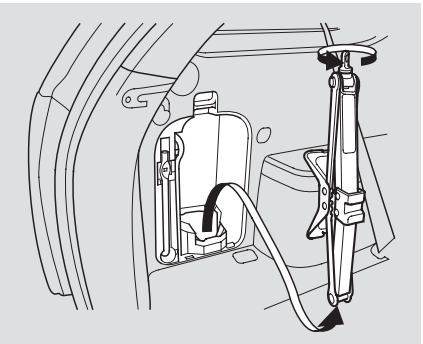

5. Take the tools out of the storage compartment.

6. Turn the jack's end bracket counterclockwise to loosen it, then remove the jack.

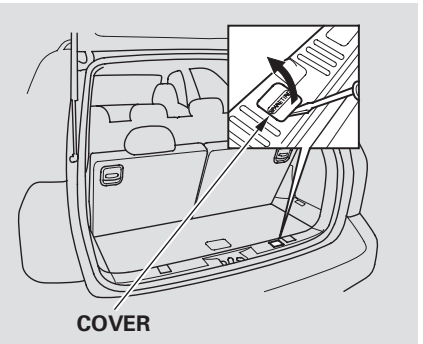

7. The spare tire is stored underneath the rear cargo area. Remove the plastic cover on the cargo area lining to access the shaft for the spare tire hoist.

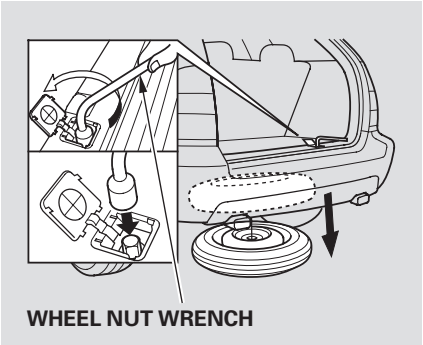

NOTICE

The wheel nut wrench supplied with your vehicle is specially adapted to fit the hoist shaft. Do not use any other tool.

8. Put the wheel nut wrench on the hoist shaft. Turn the wrench counterclockwise to lower the spare tire to the ground.

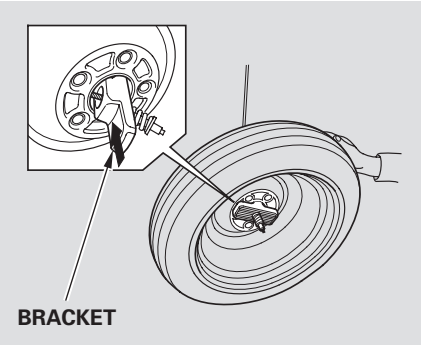

9. Keep turning the wheel nut wrench to create slack in the cable.

10. Remove the bracket from the spare tire.

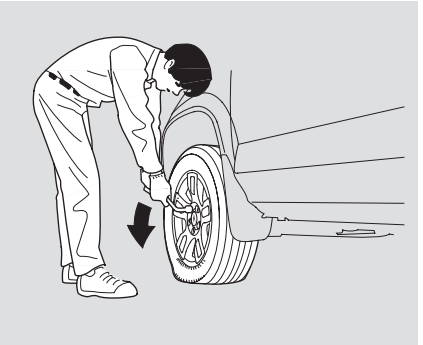

11. Loosen each wheel nut 1/2 turn with the wheel nut wrench.

CONTINUED

Changing a Flat Tire

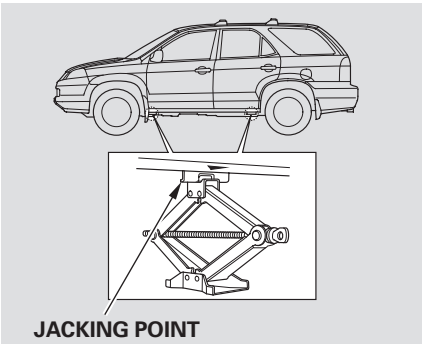

12. Place the jack under the jacking point nearest the tire you need to change. It is pointed to by a △ mark molded into the underside of the body. Turn the end bracket clockwise until the top of the jack contacts the jacking point. Make sure the jacking point tab is resting in the jack notch.

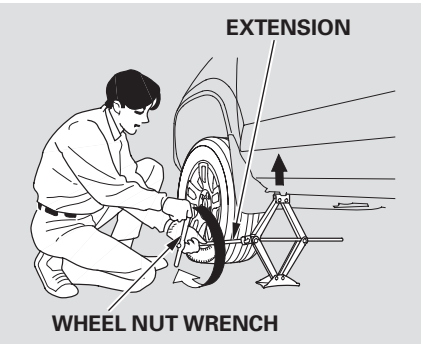

13. Use the extension and the wheel nut wrench as shown to raise the vehicle until the flat tire is off the ground.

14. Remove the wheel nuts, then remove the flat tire.

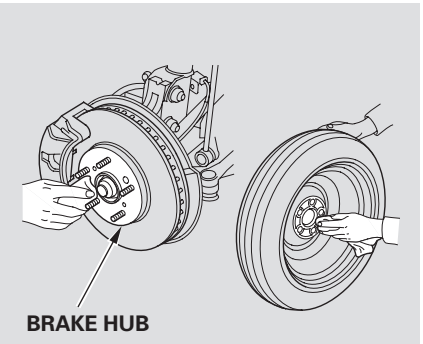

15. Before mounting the spare tire, wipe any dirt off the mounting surface of the wheel and hub with a clean cloth. Wipe the hub carefully; it may be hot from driving.

16. Put on the spare tire. Put the wheel nuts back on finger-tight, then tighten them in a crisscross pattern with the wheel nut wrench until the wheel is firmly against the hub. Do not try to tighten them fully.

17. Lower the vehicle to the ground, and remove the jack.

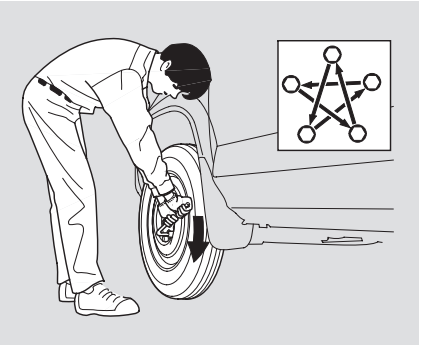

18. Tighten the wheel nuts securely in the same crisscross pattern. Have the wheel nut torque checked at the nearest automotive service facility.
    Tighten the wheel nuts to:
    80 lbf·ft (108 N·m , 11 kgf·m)

19. Remove the center cap from the flat tire.

20. Place the flat tire face up under the hoist.

21. Insert the hoist bracket into the center hole of the flat tire.

CONTINUED

Changing a Flat Tire

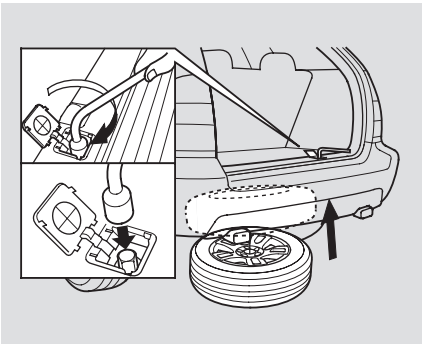

22. Slowly turn the wheel nut wrench clockwise to take up the slack of the hoist cable. Make sure the bracket is seated in the center hole of the spare tire.

23. Turn the wheel nut wrench clockwise until the flat tire rests against the underbody of the vehicle and you hear the hoist click.

NOTICE

Always raise the spare tire hoist, even if you are not stowing a tire. If the hoist is left down, it will be damaged during driving and need to be replaced.

24. Store the jack in its holder. Turn the jack's end bracket to lock it in place. Store the tools, and install the cover.

25. Turn off VSA (see page 214).

26. Refer to **Changing a Tire with TPMS** (see page 208).

⚠ WARNING

Loose items can fly around the interior in a crash and could seriously injure the occupants.

Store the wheel, jack, and tools securely before driving.

Diagnosing why the engine won't start falls into two areas, depending on what you hear when you turn the ignition switch to the START (III) position:

- You hear nothing, or almost nothing. The engine's starter motor does not operate at all, or operates very slowly.

- You can hear the starter motor operating normally, or the starter motor sounds like it is spinning faster than normal, but the engine does not start up and run.

Nothing Happens or the Starter Motor Operates Very Slowly

When you turn the ignition switch to the START (III) position, you do not hear the normal noise of the engine trying to start. You may hear a clicking sound or series of clicks, or nothing at all.

Check these things:

- Check the transmission interlock. The transmission must be in Park or neutral or the starter will not operate.

- Turn the ignition switch to the ON (II) position. Turn on the headlights, and check their brightness. If the headlights are very dim or do not come on at all, the battery is discharged. See **Jump Starting** on page 268 .

- Turn the ignition switch to the START (III) position. If the headlights do not dim, check the condition of the fuses. If the fuses are OK, there is probably something wrong with the electrical circuit for the ignition switch or starter motor. You will need a qualified technician to determine the problem (see **Emergency Towing** on page 275).

If the headlights dim noticeably or go out when you try to start the engine, either the battery is discharged or the connections are corroded. Check the condition of the battery and terminal connections (see page 257). You can then try jump starting the vehicle from a booster battery (see page 268).

The Starter Operates Normally

In this case, the starter motor's speed sounds normal, or even faster than normal, when you turn the ignition switch to the START (III) position, but the engine does not run.

- Are you using a properly coded key? An improperly coded key will cause the immobilizer system indicator in the dash panel to blink rapidly (see page 80).

CONTINUED

If the Engine Won't Start, Jump Starting

- Are you using the proper starting procedure? Refer to **Starting the Engine** on page 201 .
- Do you have fuel? Check the fuel gauge; the warning indicator may not be working.
- There may be an electrical problem, such as no power to the fuel pump. Check all the fuses (see page 277).

If you find nothing wrong, you will need a qualified technician to find the problem. See **Emergency Towing** on page 275 .

Jump Starting
Although this seems like a simple procedure, you should take several precautions.

⚠WARNING

A battery can explode if you do not follow the correct procedure, seriously injuring anyone nearby.

Keep all sparks, open flames, and smoking materials away from the battery.

You cannot start your vehicle by pushing or pulling it.

To jump start your vehicle:
1. Open the hood, and check the physical condition of the battery. In very cold weather, check the condition of the electrolyte. If it seems slushy or frozen, do not try jump starting until it thaws.

NOTICE

If a battery sits in extreme cold, the electrolyte inside can freeze. Attempting to jump start with a frozen battery can cause it to rupture.

2. Turn off all the electrical accessories: heater, A/C, climate control, audio system, lights, etc. Put the transmission in neutral or Park, and set the parking brake.

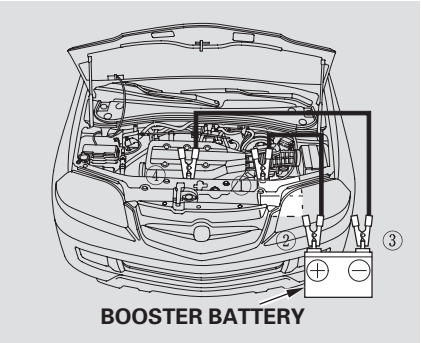

The numbers in the illustration show you the order to connect the jumper cables.

3. Connect one jumper cable to the positive (+) terminal on your vehicle's battery. Connect the other end to the positive (+) terminal on the booster battery.

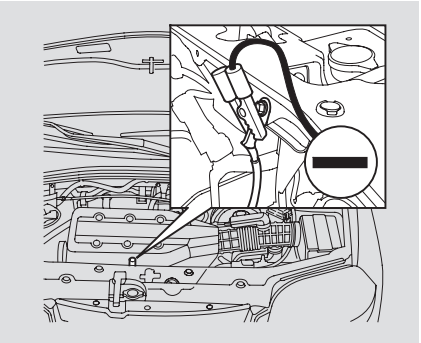

4. Connect the second jumper cable to the negative (−) terminal on the booster battery. Connect the other end to the grounding strap as shown. Do not connect this jumper cable to any other part of the engine.

5. If the booster battery is in another vehicle, have an assistant start that vehicle and run it at a fast idle.

6. Start your vehicle. If the starter motor still operates slowly, check that the jumper cables have good metal-to-metal contact.

7. Once the vehicle is running, disconnect the negative cable from the grounding strap on your vehicle, then from the booster battery. Disconnect the positive cable from your vehicle, then from the booster battery.

Keep the ends of the jumper cables away from each other and any metal on the vehicle until everything is disconnected. Otherwise, you may cause an electrical short.

If the Engine Overheats

The pointer of your vehicle's temperature gauge should stay in the midrange. If it climbs to the red mark, you should determine the reason.

If the vehicle overheats, you should take immediate action. The only indication may be the temperature gauge climbing to or above the red mark. Or you may see steam or spray coming from under the hood.

NOTICE

Driving with the temperature gauge pointer at the red mark can cause serious damage to the engine.

⚠WARNING

Steam and spray from an overheated engine can seriously scald you.

Do not open the hood if steam is coming out.

1. Safely pull to the side of the road. Put the transmission in Park, and set the parking brake. Turn off all accessories, and turn on the hazard warning indicators.
2. If you see steam and/or spray coming from under the hood, turn off the engine. Wait until you see no more signs of steam or spray, then open the hood.
3. If you do not see steam or spray, leave the engine running, and watch the temperature gauge. If the high heat is due to overloading, the engine should start to cool down almost immediately. If it does, wait until the temperature gauge comes down to the midpoint, then continue driving.

4. If the temperature gauge stays at the red mark, turn off the engine.

5. Look for any obvious coolant leaks, such as a split radiator hose. Everything is still extremely hot, so use caution. If you find a leak, it must be repaired before you continue driving (see **Emergency Towing** on page 275).

6. If you do not find an obvious leak, check the coolant level in the radiator reserve tank. Add coolant if the level is below the MIN mark.

7. If there was no coolant in the reserve tank, you may need to add coolant to the radiator. Let the engine cool down until the pointer reaches the middle of the temperature gauge, or lower, before checking the radiator.

⚠WARNING

Removing the radiator cap while the engine is hot can cause the coolant to spray out, seriously scalding you.

Always let the engine and radiator cool down before removing the radiator cap.

8. Using gloves or a large heavy cloth, turn the radiator cap counterclockwise, without pushing down, to the first stop. After the pressure releases, push down on the cap, and turn it until it comes off.

9. Start the engine and set the temperature control dial to maximum (climate control to FULL AUTO at 90°F/32°C). Add coolant to the radiator up to the base of the filler neck. If you do not have the proper coolant mixture available, you can add plain water. Remember to have the cooling system drained and refilled with the proper mixture as soon as you can.

10. Put the radiator cap back on tightly. Run the engine, and watch the temperature gauge. If it goes back to the red mark, the engine needs repair (see **Emergency Towing** on page 275).

11. If the temperature stays normal, check the coolant level in the radiator reserve tank. If it has gone down, add coolant to the MAX mark. Put the cap back on tightly.

Low Oil Pressure Indicator, Charging System Indicator

Low Oil Pressure Indicator

This indicator should never come on when the engine is running. If it starts flashing or stays on, the oil pressure has dropped very low or lost pressure. Serious engine damage is possible, and you should take immediate action.

NOTICE

Running the engine with low oil pressure can cause serious mechanical damage almost immediately. Turn off the engine as soon as you can safely get the vehicle stopped.

1. Safely pull off the road, and shut off the engine. Turn on the hazard warning indicators.

2. Let the vehicle sit for a minute. Open the hood, and check the oil level (see page 191). An engine very low on oil can lose pressure during cornering and other driving maneuvers.

3. If necessary, add oil to bring the level back to the full mark on the dipstick (see page 237).

4. Start the engine, and watch the oil pressure indicator. If it does not go out within 10 seconds, turn off the engine. There is a mechanical problem that needs to be repaired before you can continue driving (see **Emergency Towing** on page 275).

Charging System Indicator

If the charging system indicator comes on brightly when the engine is running, the battery is not being charged.

Immediately turn off all electrical accessories. Try not to use other electrically operated controls such as the power windows. Keep the engine running; starting the engine will discharge the battery rapidly.

Go to a service station or garage where you can get technical assistance.

Malfunction Indicator Lamp

If this indicator comes on while driving, it means one of the engine's emissions control systems may have a problem. Even though you may feel no difference in your vehicle's performance, it can reduce your fuel economy and cause increased emissions. Continued operation may cause serious damage.

If you have recently refueled your vehicle, the indicator could come on because of a loose or missing fuel fill cap. Tighten the cap until it clicks at least once. Tightening the cap will not turn the indicator off immediately; it can take several days of normal driving.

If the indicator comes on repeatedly, even though it may turn off as you continue driving, have the vehicle checked by your dealer as soon as possible.

NOTICE

If you keep driving with the malfunction indicator lamp on, you can damage your vehicle's emissions controls and engine. Those repairs may not be covered by your vehicle's warranties.

Readiness Code

Your vehicle has certain "readiness codes" that are part of the on-board diagnostics for the emissions systems. In some states, part of the emissions testing is to make sure these codes are set. If they are not set, the test cannot be completed.

If your vehicle battery has been disconnected or gone dead, these codes are erased. It can take several days of driving under various conditions to set the codes again.

To check if they are set, turn the ignition switch to the ON (II) position, without starting the engine. The malfunction indicator lamp will come on for 20 seconds. If it then goes off, the readiness codes are set. If it blinks five times, the readiness codes are not set. If possible, do not take your vehicle for a state emissions test until the readiness codes are set. Refer to **State Emissions Testing** for more information (see page 292)

Brake System Indicator

Brake System Indicator

U.S.

BRAKE

Canada

The brake system indicator normally comes on when you turn the ignition switch to the ON (II) position, and as a reminder to check the parking brake. It will stay on if you do not fully release the parking brake.

If the brake system indicator comes on while driving, the brake fluid level is probably low. Press lightly on the brake pedal to see if it feels normal. If it does, check the brake fluid level the next time you stop at a service station (see page 243).

If the fluid level is low, take the vehicle to your dealer and have the brake system inspected for leaks or worn brake pads.

However, if the brake pedal does not feel normal, you should take immediate action. A problem in one part of the system's dual circuit design will still give you braking at two wheels. You will feel the brake pedal go down much farther before the vehicle begins to slow down, and you will have to press harder on the pedal.

Slow down by shifting to a lower gear, and pull to the side of the road when it is safe. Because of the long distance needed to stop, it is hazardous to drive the vehicle. You should have it towed, and repaired as soon as possible.

If you must drive the vehicle a short distance in this condition, drive slowly and carefully.

If your vehicle needs to be towed, call a professional towing service or organization. Never tow your vehicle with just a rope or chain. It is very dangerous.
The only way you can safely tow your vehicle is with flat-bed equipment. The operator will load your vehicle on the back of a truck. Any other method of towing will damage the drive system. When you contact the towing agency, inform them a flat-bed is required.

NOTICE

Towing your vehicle with two tires on the ground will damage parts of the 4WD system. It should be transported on a flat-bed truck or trailer.

If, due to damage, your vehicle must be towed with all four wheels on the ground, do the following:

- Release the parking brake.
- Start the engine.
- Shift to D for several seconds, then to N.
- Turn off the engine.

NOTICE

Improper towing preparation will damage the transmission. Follow the above procedure exactly. If you cannot shift the transmission or start the engine, your vehicle must be transported with the all four wheels off the ground.

With all four wheels on the ground, it is best to tow the vehicle no farther than 50 miles (80 km), and keep the speed below 35 mph (55 km/h).

NOTICE

The steering system can be damaged if the steering wheel is locked. Leave the ignition switch in the ACCESSORY (I) position, and make sure the steering wheel turns freely before you begin towing.

NOTICE

Trying to lift or tow your vehicle by the bumpers will cause serious damage. The bumpers are not designed to support the vehicle's weight.

Fuses

DRIVER'S SIDE INTERIOR

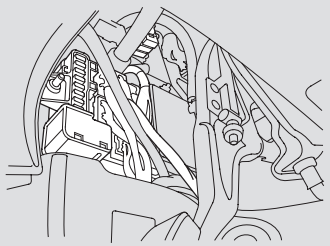

The vehicle's fuses are contained in five fuse boxes.

The interior fuse boxes are located under the dashboard on the driver's and passenger's side.

PASSENGER'S SIDE INTERIOR

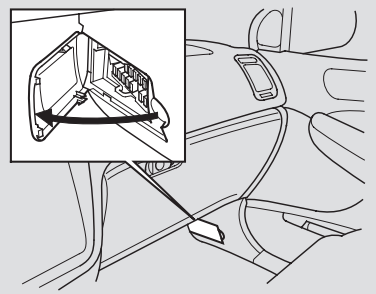

To open the passenger's side fuse box, pull the right edge of the cover.

The primary under-hood fuse box is on the passenger's side. The secondary fuse box is next to the battery.

UNDER-HOOD (PRIMARY)

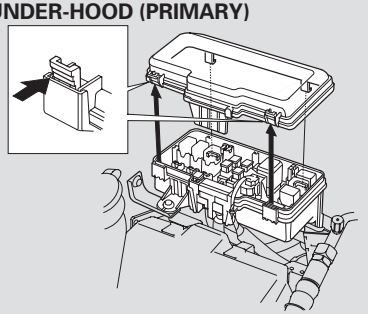

UNDER-HOOD (SECONDARY)

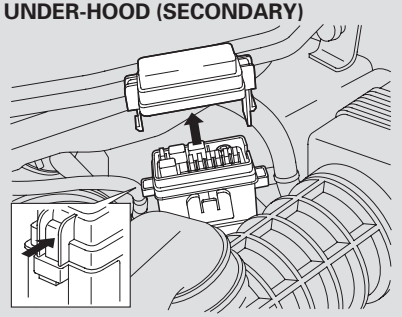

Checking and Replacing Fuses
If something electrical in your vehicle stops working, the first thing you should check for is a blown fuse. Determine from the chart on pages 279 and 280 , or the diagram on the fuse box lid, which fuse or fuses control that device. The diagram for the interior driver's side fuse box is on the kick panel below the fuse box. Check those fuses first, but check all the fuses before deciding that a blown fuse is the cause. Replace any blown fuses, and check if the device works.

1. Turn the ignition switch to the LOCK (0) position. Make sure the headlights and all other accessories are off.
2. Remove the cover from the fuse box.

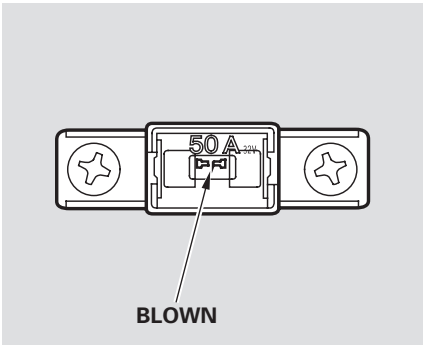

3. Check each of the large fuses in the primary under-hood fuse box by looking through the top at the wire inside. Removing these fuses requires a Phillips-head screwdriver.

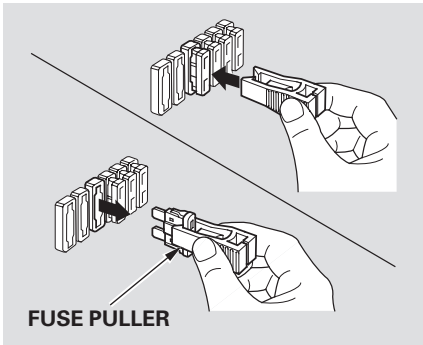

4. Check the smaller fuses in the under-hood fuse boxes and all the fuses in the interior fuse box by pulling out each one with the fuse puller provided in the primary under-hood fuse box.

Fuses

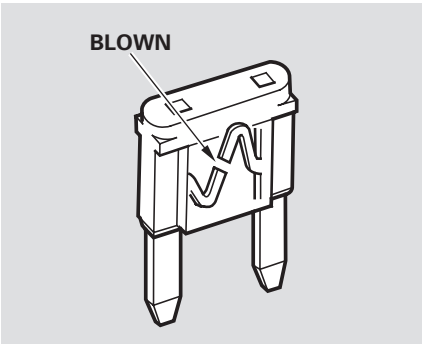

5. Look for a burned wire inside the fuse. If it is burned out, replace it with one of the spare fuses of the same rating or lower.

If you cannot drive the vehicle without fixing the problem, and you do not have a spare fuse, take a fuse of the same rating or a lower rating from one of the other circuits. Make sure you can do without that circuit temporarily (such as the accessory power socket or radio).

If you replace the blown fuse with a spare fuse that has a lower rating, it might blow out again. This does not indicate anything wrong. Replace the fuse with one of the correct rating as soon as you can.

NOTICE

Replacing a fuse with one that has a higher rating greatly increases the chances of damaging the electrical system. If you do not have a replacement fuse with the proper rating for the circuit, install one with a lower rating.

6. If the replacement fuse of the same rating blows in a short time, there is probably a serious electrical problem with your vehicle. Leave the blown fuse in that circuit, and have your vehicle checked by a qualified mechanic.

If the radio fuse is removed, the audio system will disable itself. The next time you turn on the radio you will see " CodE " in the frequency display. Use the preset buttons to enter the five-digit code (see page 131).

Fuse Locations

PRIMARY UNDER-HOOD FUSE BOX

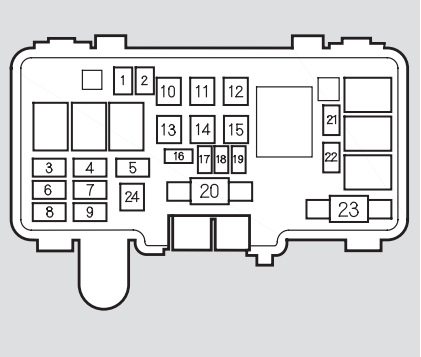

No.	Amps.	Circuits Protected
1	20 A	Spare Fuse
2	30 A	Spare Fuse
3	20 A	Right Headlight
4	15 A	ACG S
5	15 A	Hazard
6	—	Not used
7	20 A	Stop
8	20 A	Left Headlight
9	20 A	Radio
10	40 A	Power Window Motor
11	30 A	Rear A/C
12	30 A	Rear Defroster
13	40 A	Back Up, ACC

No.	Amps.	Circuits Protected
14	40 A	Power Seat
15	40 A	Heater Motor
16	30 A	Cooling Fan
17	7.5 A	Spare Fuse
18	10 A	Spare Fuse
19	15 A	Spare Fuse
20	120 A	Battery
21	30 A	Condenser Fan
22	7.5 A	MG Clutch
23	50 A	IGI Main
24	20 A	Fog Lights

SECONDARY UNDER-HOOD FUSE BOX

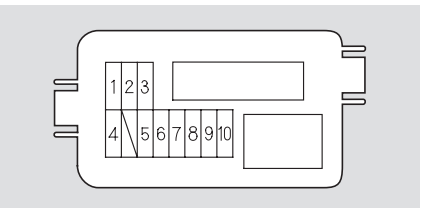

No.	Amps.	Circuits Protected
1	20 A	Rear Entertainment System
2	40 A	VSA F/S Relay
3	30 A	VSA Motor
4	20 A	4WD
5	20 A	Rear Accessory Socket

No.	Amps.	Circuits Protected
6	15 A	ETC
7	15 A	IG Coil
8	15 A	LAF
9	7.5 A	FI-Back-up
10	20 A	P/W DR

Fuse Locations

INTERIOR FUSE BOX
Driver's Side

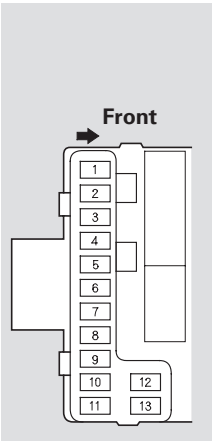

No.	Amps.	Circuits Protected
1	15 A	Fuel Pump
2	10 A	SRS
3	7.5 A	Heater Control, A/C Clutch Relay, Cooling Fan Relay
4	7.5 A	Power Mirror
5	10 A	Daytime Running Light*/ Rear Wiper
6	15 A	ECU (PCM), Cruise Control
7	7.5 A	OPDS, OnStar
8	7.5 A	ACC Relay
9	10 A	Back-up Lights, Instrument Lights, TPMS
10	7.5 A	Turn Signals
11	15 A	IG Coil
12	30 A	Front Wiper
13	—	Not Used

＊：Canadian models

Driver's Side Auxiliary

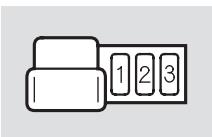

No.	Amps.	Circuits Protected
1	7.5 A	Horn
2	7.5 A	ELD Unit, Immobilizer Control Unit, VSA Control Unit, Alternator
3	7.5 A	Auto Wipers

Passenger's Side

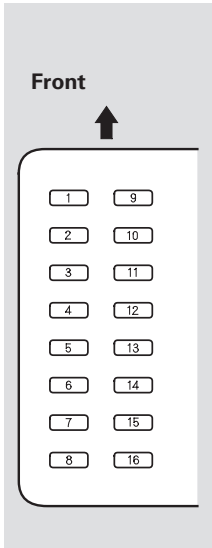

No.	Amps.	Circuits Protected
1	30 A	Moonroof
2	20 A	Driver's Power Seat Reclining
3	20 A	Passenger's Power Seat Sliding
4	20 A	Driver's Power Seat Sliding
5	20 A	Passenger's Power Seat Reclining
6	10 A	Daytime Running Light, OnStar*
7	20 A	Driver's side Rear Power Window
8	20 A	Front Passenger's Power Window
9	15 A	Front Accessory Socket, HFL, OnStar
10	15 A	Small Light
11	10 A	Interior Light, TPMS, HFL
12	20 A	Power Door Lock
13	7.5 A	Back Up, Clock
14	20 A	Heated Seat
15	20 A	Driver's Power Window
16	20 A	Passenger's Side Rear Power Window

＊：Canadian models

Technical Information

The diagrams in this section give you the dimensions and capacities of your vehicle, and the locations of the identification numbers. It also includes information you should know about your vehicle's tires and emissions control systems.

Identification Numbers 282
Specifications 284
DOT Tire Quality Grading 286
Uniform Tire Quality Grading 286
Treadwear 286
Traction..... 286
Temperature 287
Tire Labeling..... 288
Emissions Controls..... 289
The Clean Air Act..... 289
Crankcase Emissions Control System..... 289
Evaporative Emissions Control System..... 289
Onboard Refueling Vapor Recovery 289
Exhaust Emissions Controls 290
PGM-FI System 290
Ignition Timing Control System..... 290
Exhaust Gas Recirculation (EGR) System..... 290
Three Way Catalytic Converter..... 290
Replacement Parts..... 290
Three Way Catalytic Converter... 291
State Emissions Testing 292

Identification Numbers

Your vehicle has several identifying numbers located in various places.

The Vehicle Identification Number (VIN) is the 17-digit number your Acura dealer uses to register your vehicle for warranty purposes. It is also necessary for licensing and insuring your vehicle. The easiest place to find the VIN is on a plate fastened to the top of the dashboard. You can see it by looking through the windshield on the driver's side. It is also on the Certification label attached to the driver's doorjamb, and is stamped on the engine compartment bulkhead. The VIN is also provided in bar code on the Certification label.

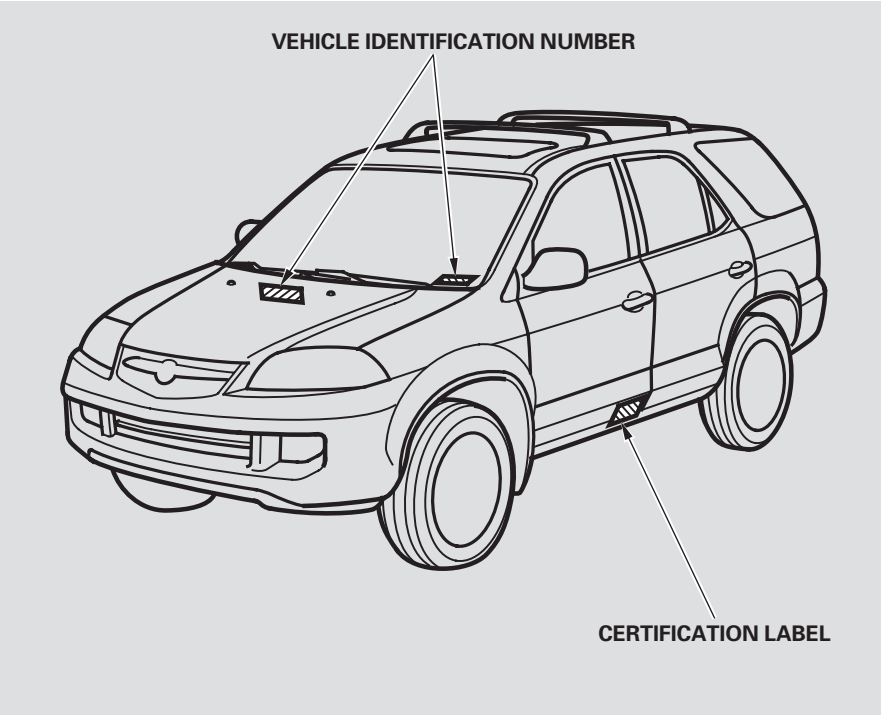

The engine number is stamped into the engine block. It is on the front.

The transmission number is on a label on top of the transmission.

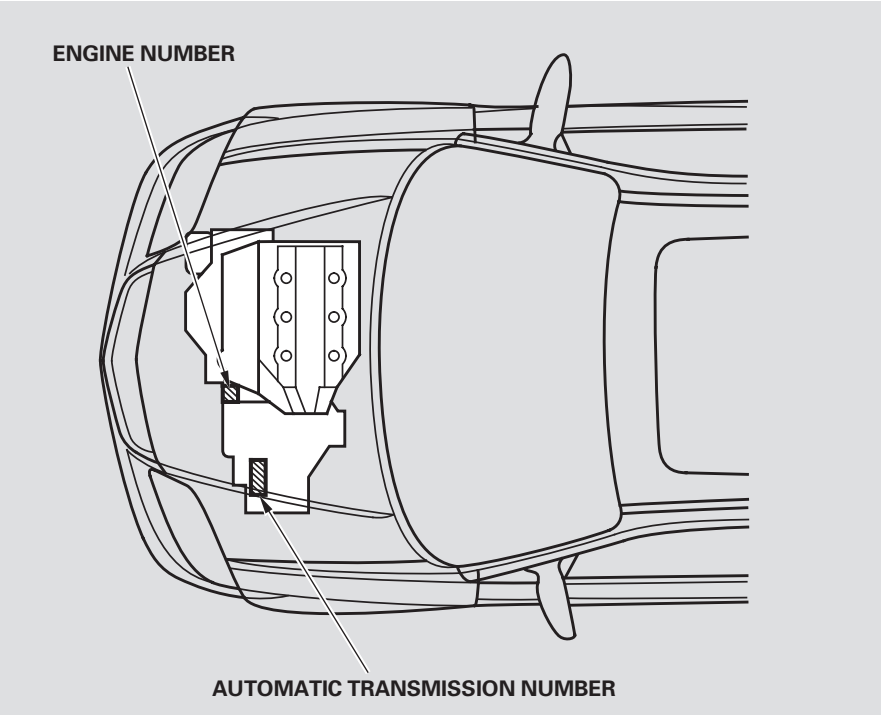

Specifications

Dimensions

Length		188.7 in (4,793 mm)
Width		77.0 in (1,955 mm)
Height	Standard	68.7 in (1,744 mm)
	Premium	71.3 in (1,811 mm)
Wheelbase		106.3 in (2,700 mm)
Track	Front	66.3 in (1,685 mm)
	Rear	66.5 in (1,690 mm)

Weights

Gross vehicle weight rating	See the tire information label attached to the driver's doorjamb.
Gross combined weight*2 rating (GCWR)	9,854 lbs (4,470 kg)*1

*1 : Equipped with transmission fluid cooler and power steering fluid cooler.
*2 : The GCWR must be reduced 2 percent for every 1,000 feet (305 meters) of elevation.

Air Conditioning

Refrigerant type	HFC-134a (R-134a)
Charge quantity	24.7－26.5 oz (700－750 g)
Lubricant type	ND-OIL8

Capacities

Fuel tank		Approx. 20.4 US gal (77.0 ℓ)
Engine coolant	Change*1	1.88 US gal (7.1 ℓ)
	Total	2.38 US gal (9.0 ℓ)
Engine oil	Change*2 Including filter	4.5 US qt (4.3 ℓ)
	Without filter	4.2 US qt (4.0 ℓ)
	Total	5.3 US qt (5.0 ℓ)
Automatic transmission fluid	Change	2.9 US qt (2.7 ℓ)
	Total	7.7 US qt (7.3 ℓ)
Rear differential fluid	Change	2.9 US qt (2.7 ℓ)
	Total	3.0 US qt (2.8 ℓ)
Transfer assembly fluid	Change	0.45 US qt (0.43 ℓ)
	Total	0.48 US qt (0.45 ℓ)
Windshield washer reservoir		4.8 US qt (4.5 ℓ)

*1 : Including the coolant in the reserve tank and that remaining in the engine
Reserve tank capacity:
0.16 US gal (0.6 ℓ)
*2 : Excluding the oil remaining in the engine

Specifications

Lights

Headlights	High	12 V — 60 W (HB3)
	Low	12 V — 55 W (H11)
Front side marker lights		12 V — 3 CP
Front turn signal lights/ Parking lights		12 V — 28/8 W
Fog light		12 V — 51 W (HB4)
Front foot lights		12 V — 5 W
Rear turn signal/hazard lights		12 V — 21 W
Brake/Taillights		12 V — 21 W/5 W
Backup lights		12 V — 21 CP (18 W)
License plate lights		12 V — 3 CP
High-mount brake light		12 V — 21 W
Individual map lights	Front	12 V — 5 W
	Rear	12 V — 5 W
Cargo area light		12 V — 5 W
Tailgate light		12 V — 5 W
Vanity mirror light		12 V — 1.1 W
Door light		12 V — 3.8 W

Battery

Capacity	12 V — 52 AH/5 HR 12 V — 65 AH/20 HR

Fuses

Interior	Driver's side	See page 280 or the fuse label attached to the dashboard.
	Passenger's side	See page 280 or the fuse label attached to the inside of the fuse box door under the dashboard.
Under-hood		See page 279 or the fuse box cover.

Engine

Type	Water cooled 4-stroke SOHC, V6 gasoline engine
Bore x Stroke	3.50 x 3.66 in (89.0 x 93.0 mm)
Displacement	211.8 cu-in (3,471 cm^3)
Compression ratio	10.0 : 1
Spark plugs	NGK: IZFR5K-11 DENSO: SKJ16DR-M11

Alignment

Toe-in	Front	0.00 in (0.0 mm)
	Rear	0.00 in (0.0 mm)
Camber	Front	−0°50′
	Rear	−0°50′
Caster	Front	1°53′

Tires

Size	Front/Rear	P235/65R17 103T
	Spare	T155/90D16 110M
Pressure	Front/Rear	32 psi (220 kPa , 2.2 kgf/cm^2)
	Spare	60 psi (420 kPa , 4.2 kgf/cm^2)

DOT Tire Quality Grading (U.S. Vehicles)

The tires on your vehicle meet all U.S. Federal Safety Requirements. All tires are also graded for treadwear, traction, and temperature performance according to Department of Transportation (DOT) standards. The following explains these gradings.

Uniform Tire Quality Grading
Quality grades can be found where applicable on the tire sidewall between the tread shoulder and the maximum section width. For example:

Treadwear 200
Traction AA
Temperature A

All passenger vehicle tires must conform to Federal Safety Requirements in addition to these grades.

Treadwear
The treadwear grade is a comparative rating based on the wear rate of the tire when tested under controlled conditions on a specified government test course. For example, a tire graded 150 would wear one and one-half (1 1/2) times as well on the government course as a tire graded 100. The relative performance of tires depends upon the actual conditions of their use, however, and may depart significantly from the norm due to variations in driving habits, service practices, and differences in road characteristics and climate.

Traction — AA, A, B, C
The traction grades, from highest to lowest, are AA, A, B, and C. Those grades represent the tire's ability to stop on wet pavement as measured under controlled conditions on specified government test surfaces of asphalt and concrete. A tire marked C may have poor traction performance.

Warning: The traction grade assigned to this tire is based on straight-ahead braking traction tests, and does not include acceleration, cornering, hydroplaning, or peak traction characteristics.

Temperature – A, B, C
The temperature grades are A (the highest), B, and C, representing the tire's resistance to the generation of heat and its ability to dissipate heat when tested under controlled conditions on a specified indoor laboratory test wheel. Sustained high temperature can cause the material of the tire to degenerate and reduce tire life, and excessive temperature can lead to sudden tire failure. The grade C corresponds to a level of performance, which all passenger vehicle tires must meet under the Federal Motor Vehicle Safety Standard No. 109. Grades B and A represent higher levels of performance on the laboratory test wheel than the minimum required by law.

Warning: The temperature grade for this tire is established for a tire that is properly inflated and not overloaded. Excessive speed, underinflation, or excessive loading, either separately or in combination, can cause heat buildup and possible tire failure.

Tire Labeling

The tires that came on your vehicle have a number of markings. Those you should be aware of are described below.

Tire Size
Whenever tires are replaced, they should be replaced with tires of the same size. The following is an example of tire size with an explanation of what each component means.

P225/55R16 94V

P — Vehicle type (P indicates passenger vehicle).

225 — Tire width in millimeters.

55 — Aspect ratio (the tire's section height as a percentage of its width).

R — Tire construction code (R indicates radial).

16 — Rim diameter in inches.

94 — Load index (a numerical code associated with the maximum load the tire can carry).

V — Speed symbol (an alphabetical code indicating the maximum speed rating).

Tire Identification Number
The tire identification number (TIN) is a group of numbers and letters that look like the following example TIN.

DOT B97R FW6X 2202

DOT — This indicates that the tire meets all requirements of the U.S. Department of Transportation.

B97R — Manufacturer's identification mark.

FW6X — Tire type code.

2202 — Date of manufacture.

Maximum Tire Pressure
Max Press — The maximum air pressure the tire can hold.

Maximum Tire Load
Max Load — The maximum load the tire can carry at maximum air pressure.

The burning of gasoline in your vehicle's engine produces several by-products. Some of these are carbon monoxide (CO), oxides of nitrogen (NOx), and hydrocarbons (HC). Gasoline evaporating from the tank also produces hydrocarbons. Controlling the production of NOx, CO, and HC is important to the environment. Under certain conditions of sunlight and climate, NOx and HC react to form photochemical "smog." Carbon monoxide does not contribute to smog creation, but it is a poisonous gas.

The Clean Air Act
The United States Clean Air Act* sets standards for automobile emissions. It also requires that automobile manufacturers explain to owners how their emissions controls work and what to do to maintain them. This section summarizes how the emissions controls work. Scheduled maintenance is on page 231.

* In Canada, Acura vehicles comply with the Canadian emission requirements, as specified in an agreement with Environment Canada, at the time they are manufactured.

Crankcase Emissions Control System
Your vehicle has a positive crankcase ventilation system. This keeps gasses that build up in the engine's crankcase from going into the atmosphere. The positive crankcase ventilation valve routes them from the crankcase back to the intake manifold. They are then drawn into the engine and burned.

Evaporative Emissions Control System
As gasoline evaporates in the fuel tank, an evaporative emissions control canister filled with charcoal adsorbs the vapor. It is stored in this canister while the engine is off. After the engine is started and warmed up, the vapor is drawn into the engine and burned during driving.

Onboard Refueling Vapor Recovery
The onboard refueling vapor recovery (ORVR) system captures the fuel vapors during refueling. The vapors are adsorbed in a canister filled with activated carbon. While driving, the fuel vapors are drawn into the engine and burned off.

Emissions Controls

Exhaust Emissions Controls

The exhaust emissions controls include four systems: PGM-FI, ignition timing control, exhaust gas recirculation, and three way catalytic converter. These four systems work together to control the engine's combustion and minimize the amount of HC, CO, and NOx that comes out the tailpipe. The exhaust emissions control systems are separate from the crankcase and evaporative emissions control systems.

PGM-FI System

The PGM-FI system uses sequential multiport fuel injection.
It has three subsystems: air intake, engine control, and fuel control. The powertrain control module (PCM) uses various sensors to determine how much air is going into the engine. It then controls how much fuel to inject under all operating conditions.

Ignition Timing Control System

This system constantly adjusts the ignition timing, reducing the amount of HC, CO, and NOx produced.

Exhaust Gas Recirculation (EGR) System

The exhaust gas recirculation (EGR) system takes some of the exhaust gas and routes it back into the intake manifold. Adding exhaust gas to the air/fuel mixture reduces the amount of NOx produced when the fuel is burned.

Three Way Catalytic Converter

The three way catalytic converter is in the exhaust system. Through chemical reactions, it converts HC, CO, and NOx in the engine's exhaust to carbon dioxide (CO_2), nitrogen (N_2), and water vapor.

Replacement Parts

The emissions control systems are designed and certified to work together in reducing emissions to levels that comply with the Clean Air Act. To make sure the emissions remain low, you should use only new Acura replacement parts or their equivalent for repairs. Using lower quality parts may increase the emissions from your vehicle.

The emissions control systems are covered by warranties separate from the rest of your vehicle. Read your warranty manual for more information.

Three Way Catalytic Converter

The three way catalytic converter contains precious metals that serve as catalysts, promoting chemical reactions to convert the exhaust gasses without affecting the metals. The catalytic converter is referred to as a three-way catalyst, since it acts on HC, CO, and NOx. A replacement unit must be an original Acura part or its equivalent.

The three way catalytic converter must operate at a high temperature for the chemical reactions to take place. It can set on fire any combustible materials that come near it. Park your vehicle away from high grass, dry leaves, or other flammables.

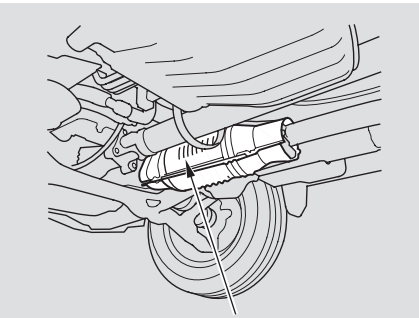

THREE WAY CATALYTIC CONVERTER

A defective three way catalytic converter contributes to air pollution, and can impair your engine's performance. Follow these guidelines to protect your vehicle's three way catalytic converter.

- Always use unleaded gasoline. Even a small amount of leaded gasoline can contaminate the catalyst metals, making the three way catalytic converter ineffective.

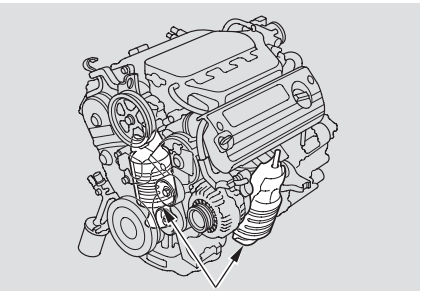

WARM UP THREE WAY CATALYTIC CONVERTER

- Keep the engine tuned-up.
- Have your vehicle diagnosed and repaired if it is misfiring, back-firing, stalling, or otherwise not running properly.

State Emissions Testing

Testing of Readiness Codes
If you take your vehicle for a state emissions test shortly after the battery has been disconnected or gone dead, it may not pass the test. This is because of certain "readiness codes" that must be set in the on-board diagnostics for the emissions systems. These codes are erased when the battery is disconnected, and set again only after several days of driving under a variety of conditions.

If the testing facility determines that the readiness codes are not set, you will be requested to return at a later date to complete the test. If you must get the vehicle retested within the next two or three days, you can condition the vehicle for retesting by doing the following.

- Make sure the gas tank is nearly, but not completely full (around 3/4).
- Make sure the vehicle has been parked with the engine off for 6 hours or more.
- Make sure the ambient temperature is between 40° and 95°F.
- Without touching the accelerator pedal, start the engine, and let it idle for 20 seconds.
- Keep the vehicle in Park. Increase the engine speed to 2,000 rpm, and hold it there until the temperature gauge rises to at least 1/4 of the scale (about 3 minutes).

- Select a nearby lightly traveled major highway where you can maintain a speed of 50 to 60 mph (80 to 97 km/h) for at least 20 minutes. Drive on the highway in D. Do not use the cruise control. When traffic allows, drive for 90 seconds without moving the accelerator pedal. (Vehicle speed may vary slightly; this is okay.) If you cannot do this for a continuous 90 seconds because of traffic conditions, drive for at least 30 seconds, then repeat it two more times (for a total of 90 seconds).
- Then drive in city/suburban traffic for at least 10 minutes. When traffic conditions allow, let the vehicle coast for several seconds without using the accelerator pedal or the brake pedal.
- Stop the vehicle, turn off the ignition switch, and leave it off for 30 minutes.

If the testing facility determines the readiness codes are still not set, see your dealer.

Warranty and Customer Relations

Customer Service Information 296
Warranty Coverages 297
Reporting Safety Defects (U.S. Vehicles) 298
Authorized Manuals 299

Customer Service Information

Acura dealership personnel are trained professionals. They should be able to answer all your questions. If you encounter a problem that your dealership does not solve to your satisfaction, please discuss it with the dealership's management. The service manager or general manager can help. Almost all problems are solved in this way.

If you are dissatisfied with the decision made by the dealership's management, contact the Acura Customer Service Office.

U.S. Owners:
American Honda Motor Co., Inc.
Acura Client Services
Mail Stop 500-2N-7E
1919 Torrance Blvd.
Torrance, CA 90501-2746

Tel: (800) 382-2238

In Puerto Rico and the U.S. Virgin Islands:

Bella International Corp.
C-1 Bechara St. Segarra Corner
Puerto Nuevo, Puerto Rico 00920

Tel:(787) 620-7028

Canadian Owners:
CUSTOMER RELATIONS
RELATIONS AVEC LA CLIENTÉLE
Honda Canada Inc.
715 Milner Avenue
Toronto, ON
M1B 2K8

Tel: 1-888-9-ACURA-9
Fax: Toll-free 1-877-939-0909
Toronto (416) 287-4776

When you call or write, please give us this information:

- Vehicle Identification Number (see page 284)
- Name and address of the dealer who services your vehicle
- Date of purchase
- Mileage on your vehicle
- Your name, address, and telephone number
- A detailed description of the problem
- Name of the dealer who sold the vehicle to you

U.S. Owners
Your new vehicle is covered by these warranties:

New Vehicle Limited Warranty — covers your new vehicle, except for the battery, emissions control systems, and accessories, against defects in materials and workmanship.

Emissions Control Systems Defects Warranty and Emissions Performance Warranty — these two warranties cover your vehicle's emissions control systems. Time, mileage, and coverage are conditional. Please read your warranty booklet for exact information.

Original Equipment Battery Limited Warranty — this warranty gives up to 100 percent credit toward a replacement battery.

Seat Belt Limited Warranty — a seat belt that fails to function properly is covered for the useful life of the vehicle.

Rust Perforation Limited Warranty — all exterior body panels are covered for rust-through from the inside for the specified time period with no mileage limit.

Accessory Limited Warranty — Acura accessories are covered under this warranty. Time and mileage limits depend on the type of accessory and other factors. Please read your warranty manual for details.

Replacement Parts Limited Warranty — covers all Acura replacement parts against defects in materials and workmanship.

Replacement Battery Limited Warranty — provides prorated coverage for a replacement battery purchased from your dealer.

Replacement Muffler Lifetime Limited Warranty — provides coverage for as long as the purchaser of the muffler owns the vehicle.

Restrictions and exclusions apply to all these warranties. Please read the 2006 Acura Warranty Information booklet that came with your vehicle for precise information on warranty coverages. Your vehicle's original tires are covered by their manufacturer. Tire warranty information is in a separate booklet.

Canadian Owners
Please refer to the 2006 Warranty Manual that came with your vehicle.

Reporting Safety Defects (U.S. Vehicles)

If you believe that your vehicle has a defect which could cause a crash or could cause injury or death, you should immediately inform the National Highway Traffic Safety Administration (NHTSA), in addition to notifying American Honda Motor Co., Inc.

If NHTSA receives similar complaints, it may open an investigation, and if it finds that a safety defect exists in a group of vehicles, it may order a recall and remedy campaign. However, NHTSA cannot become involved in individual problems between you, your dealer, or Acura Automobile Division, American Honda Motor Co., Inc.

To contact NHTSA, you may call the Vehicle Safety Hotline toll-free at 1-888-327-4236 (TTY: 1-800-424-9153); go to *http://www.safercar.gov*; or write to: Administrator, NHTSA, 400 Seventh Street, SW., Washington, DC 20590. You can also obtain other information about motor vehicle safety from *http://www.safercar.gov*.

Purchasing Factory Authorized Manuals (U.S. only)

The publications shown below can be purchased from Helm Incorporated. You can order in any of three ways:

- Detach and mail the order form on the right half of this page
- Call Helm Inc. at 1-800-782-4356 (credit card orders only)
- Go online at *www. helminc. com*

If you are interested in other years or models, contact Helm Inc. at 1-800-782-4356.

Publication Form Number	Form Description	Price Each*
61S3V06	2003-2006 Acura MDX Service Manual	$75.00
61S3V06EL	2003-06 Acura MDX Electrical Troubleshooting Manual	$50.00
61S3V30	2001-06 Acura MDX Body Repair Manual	$44.00
31S3V650	2006 Acura MDX Owner's Manual	$37.00
31S3V850	2006 Acura MDX Navigation System Owner's Manual	$29.00
31S3V930	2006 Acura MDX Maintenance Journal	$12.00
31S3VQ30	2006 Acura MDX Quick Start Guide	$12.00
ACU-R	Order Form for Previous Years Indicate Year and Model Desired	FREE

* Prices are subject to change without notice and without incurring obligation.

Valid only for sales within the U.S. Canadian owners should contact their authorized Acura dealer.

ORDER TOLL FREE: 1-800-782-4356

(NOTE: For Credit Card Holder Orders Only)

Monday-Friday 8:00 A.M. – 6:00 P.M. EST

MINIMUM CREDIT CARD PURCHASE $10.00

OR

By completing this form you can order the materials desired. You can pay by check or money order, or charge to your credit card. Mail to Helm Incorporated at the address shown on the back of the order form.

2006 ACU	PUBLICATION NUMBER	VEHICLE MODEL Name	VEHICLE MODEL Year	Qty	Price Each*	Total Price

TOTAL MATERIAL	
Mich. Purchases Add 6% Sales Tax	
HANDLING CHARGE	$6.95
GRAND TOTAL	

* Prices are subject to change without notice and without incurring obligation.

Orders are mailed within 10 days. Please allow adequate time for delivery.

Authorized Manuals

SHIP TO

NOTE: Dealers and Companies please provide dealer or company name, and also the name of the person to whose attention the shipment should be sent. For purchases outside U.S.A. please write to the address shown below for a quotation.

Customer Name _____ Attention _____

Street Address — No P.O. Box Number _____ Apartment Number _____

City _____ State & Zip Code _____

Daytime Telephone Number ( ) _____

PAYMENT

☐ Check or money order enclosed payable to Helm Inc — U.S. funds only. Do not send cash

☐ Master Card ☐ VISA ☐ Check here if your billing address is different from the shipping address shown above.

Account Number Expiration: Mo. Yr.

☐☐☐☐ ☐☐☐☐ ☐☐☐☐ ☐☐☐☐ –

CUSTOMER SIGNATURE _____ DATE _____

These Publications cannot be returned for credit without receiving advance authorization within 14 days of delivery. On returns, a restocking fee may be applied against the original order.

HELM P.O. BOX 07280·DETROIT, MICHIGAN 48207·1-800-782-4356

Service Manual:
This manual covers maintenance and recommended procedures for repair to engine and chassis components. It is written for the journeyman mechanic, but is simple enough for most mechanically-inclined owners to understand.

Electrical Troubleshooting Manual:
This manual complements the service manual by providing in-depth troubleshooting information for each electrical circuit in your vehicle.

Body Repair Manual:
This manual describes the procedures involved in the replacement of damaged body parts.

Index

A

Accessories and Modifications 193
ACCESSORY (Ignition Key Position) 81
Accessory Power Sockets..... 104
Additives, Engine Oil..... 238
Airbag (SRS) 11, 24
Air Conditioning System..... 106
  Rear A/C Control 111
  Usage 107
Air Outlets (Vents) 108
Air Pressure, Tires 252
Antifreeze 240
Anti-lock Brakes (ABS)
  Indicator Light 61, 211
  Operation 211
Anti-theft, Audio System..... 131
Anti-theft Steering Column Lock .. 81
Audio System 112, 118, 123
Automatic Seat Belt Tensioners 22
Automatic Lighting..... 75
Automatic Speed Control..... 146
Automatic Transmission..... 202
  Capacity, Fluid 284
  Checking Fluid Level 242
  Shifting..... 202
  Shift Lever Position Indicator .. 202
  Shift Lever Positions 202
  Shift Lock Release..... 205
Automatic Wipers..... 72

B

Battery
  Charging System Indicator..... 60, 272
  Jump Starting 268
  Maintenance..... 257
  Specifications 285
Before Driving 187
Belts, Seat 10, 21
Beverage Holders..... 102
Booster Seats 51
Brakes
  Anti-lock System (ABS) 211
  Break-in, New Linings 188
  Fluid 243
  Bulb Replacement 247
  Parking..... 94
  System Indicator..... 61, 274
  Wear Indicators 210
Braking System..... 210
Break-in, New Vehicle 188
Brightness Control, Instruments... 76
Brights, Headlights 74
Bulb Replacement
  Back-up Lights 247
  Brake Lights..... 247
  Front Parking Lights..... 246
  Front Side Marker Lights..... 246
  Headlights 245
  High-mount Brake Light 248
  Rear Bulbs 247
  Specifications 285
  Turn Signal Lights..... 246
Bulbs, Halogen..... 245

CONTINUED

Index

C

Cancel Button 146
Capacities Chart 284
Carbon Monoxide Hazard 54
Carrying Cargo 195
CAUTION, Explanation of ii
CD Care 128
CD Changer 126
CD Changer Error Messages 129
CD Player 125
Certification Label 282
Chains, *tires* 256
Change Oil
  How to 238
  When to 229
Changing a Flat Tire 261
Charging System Indicator 60, 272
Checklist, Before Driving 200
Childproof Door Locks 82
Child Safety 35
  Booster Seats 51
  Child Seats 43, 44
  Important Safety Reminders 38
  Infants 40
  Larger Children 50
  LATCH 45
  Risks with Airbags 36
  Small Children 41
  Tether 48
  Where Should a Child Sit? 36
Child Seats 43
  Tether Anchorage Points 48
Climate Control System 106
Clock 151
Code, Audio System 131
CO in the Exhaust 291
Compact Spare Tire 260
Consumer Information* 298
Controls, Instruments and 57
Coolant
  Adding 240
  Checking 192
  Proper Solution 240
  Temperature Gauge 69
Crankcase Emissions Control
  System 289
Cruise Control Indicator 63
Cruise Control Operation 146
Cup Holders 102
Customer Relations Office 296

D

DANGER, Explanation of ii
Dashboard 4, 58
Daytime Running Lights 76
Dead Battery 268
Defects, Reporting Safety 298
Defogger, Rear Window 77
Defrosting the Windows 109
Dimensions 284
Dimming the Headlights 74
Dipstick
  Automatic Transmission 242
  Engine Oil 191
Directional Signals 74
Disc Brake Wear Indicators 210
Disposal of Used Oil 239
Doors
  Locking and Unlocking 82
  Lockout Prevention 82
  Power Door Locks 82
DOT Tire Quality Grading 286
Driver and Passenger Safety 7
Driving 199
  Economy 192

Driving Position Memory
System 97
DVD Error Messages 141
DVD Player 134

E

Economy, Fuel 192
Emergencies 259
Battery, Jump Starting 268
Brake System Indicator 274
Changing a Flat Tire 261
Charging System Indicator 272
Checking the Fuses 277
Hazard Warning Flashers 76
Low Oil Pressure Indicator 272
Malfunction Indicator Lamp 273
Overheated Engine 270
Towing 275
Emergency Brake 94
Emergency Flashers 76
Emergency Towing 275
Emissions Controls 291
Engine
Coolant Temperature Gauge 69
Malfunction Indicator
Lamp 60, 273
Oil Pressure Indicator 60, 272
Oil, What Kind to Use 237
Overheating 270
Specifications 285
Speed Limiter 204
Starting 201
Engine, *if it won't start* 267
Evaporative Emissions Controls 289
Exhaust Fumes 54
Exhaust Gas Recirculation
System 290
Expectant Mothers, Use of Seat
Belts by 18

F

Fan, Interior 107
Features, Comfort and
Convenience 105
Filling the Fuel Tank 189
Filters
Oil 238
Flashers, Hazard Warning 76
Flat Tire, Changing a 261
Floor Mats 249
Fluids
Automatic Transmission 242
Brake 243
Power Steering 244
Windshield Washer 241
FM Stereo Radio
Reception 116
Fog Lights 77
Folding the Second Seat 89
Folding the Third Seat 90
Four-way Flashers 76
Front Seat 86
Adjusting 86
Airbags 26
Heaters 91
Fuel 188
Fill Door and Cap 189
Gauge 68
Octane Requirement 188
Oxygenated 188
Reserve Indicator 63
Tank, Filling the 189
Fuses, Checking the 277

CONTINUED

Index

G

Gas Mileage, Improving..... 192
Gasoline 188
  Fuel Reserve Indicator..... 63
  Gauge 68
  Octane Requirement 188
  Tank, Filling the..... 189
Gas Station Procedures..... 189
Gauges
  Engine Coolant Temperature 69
  Fuel..... 68
  Speedometer 68
  Tachometer 68
GAWR (Gross Axle Weight
  Rating) 216
GCWR (Gross Combined Weight
  Rating) 216
Gearshift Lever Positions..... 202
Glove Box 102
GVWR (Gross Vehicle Weight
  Rating) 216

H

Halogen Headlight Bulbs..... 245
HandsFreeLink 161
  HFL Buttons..... 162
Hazard Warning Flashers..... 76
Headlights..... 74
  Aiming..... 245
  Automatic Lighting 75
  Daytime Running Lights..... 76
  High Beam Indicator..... 63
  High Beams, Turning on 74
  Low Beams, Turning on 74
  Reminder Chime..... 74
  Replacing Halogen Bulbs 245
  Turning on..... 74
Headphones..... 142
Head Restraints 88
Heated Mirror 96
Heaters, Seats 91
Heating and Cooling..... 106
High-Low Beam Switch 74
HomeLink Universal
  Transceiver..... 156
Hood, Opening the 190
Horn..... 70

I

Identification Number, Vehicle.... 282
Ignition
  Keys..... 79
  Switch..... 81
  Timing Control System..... 290
Immobilizer System..... 80
Important Safety Precautions 8
Indicators, Instrument Panel..... 60
  ABS (Anti-lock Brake) 61
  A/T Temp..... 64
  Brake (Parking and Brake
    System) 61
  Brake Lamp..... 62
  Charging System 60
  Cruise Control..... 63
  DRL (Daytime Running
    Lights)..... 63
  High Beam..... 63
  Key (Immobilizer System) 61
  Lights On..... 64
  Low Fuel..... 63
  Low Oil Pressure 60
  Low Tire Pressure..... 66
  Maintenance Required..... 67

Index

Side Airbag Off 60
Seat Belt 60
SRS 60
Tire Pressure Monitor 66
TPMS System 66
Turn Signal and Hazard Warning 62
VSA Activation 65
VSA System 65
VTM-4 64
Washer Level 63
Individual Map Lights 100
Infant Restraint 40
Infant Seats 40
Inflation, Proper Tire 252
Inside Mirror 95
Inspection, Tire 253
Instrument Panel 4, 59
Instrument Panel Brightness 76
Interior Lights 99
Introduction i

J

Jacking up the Vehicle 264
Jack, Tire 261
Jump Starting 268

K

Keys 79

L

Label, Certification 282
Lane Change, Signaling 74
Lap/Shoulder Belts 16, 21
Light Control Switch 99
Lights
Bulb Replacement 245
Indicator 60
Interior 99
Parking 74
Turn Signal 74
Load Limit 196, 215
LOCK (Ignition Key Position) 81
Locks
Anti-theft Steering Column 81
Fuel Fill Door 189
Glove Box 102
Lockout Prevention 82
Power Door 82
Low Coolant Level 192
Low Fuel Indicator 63
Low Oil Pressure Indicator 60, 272
Lubricant Specifications Chart 284
Luggage 195

M

Maintenance 227
Owner's Maintenance Checks 230
Record 233-235
Required Indicator 67
Safety 228
Schedule 229-232
Malfunction Indicator Lamp .. 60, 273
Manual Seat Adjustments 87
Memory, Driving Position 97
Meters, Gauges 68
Mirrors, Adjusting 95

CONTINUED

Index

Modifying Your Vehicle..... 194
Moonroof 93

N

Neutral Gear Position..... 203
New Vehicle Break-in 188
NOTICE, Explanation of..... i
Numbers, Identification..... 282

O

Octane Requirement, Gasoline.... 188
Odometer..... 68
Odometer, Trip 69
Off-Highway Driving..... 224
Off-Road Precautions..... 224
Oil
  Change, How to 238
  Change, When to..... 229
  Checking Engine 191
  Pressure Indicator..... 60, 272
  Selecting Proper Viscosity
    Chart 237
ON (Ignition Key Position) 81
OnStar 175
Outside Mirrors 95
Overheating, Engine 270
Owner's Maintenance Checks..... 230
Oxygenated Fuels..... 188

P

Panel Brightness Control 76
Park Gear Position..... 203
Parking..... 209
Parking Brake 94
Parking Lights..... 74
Parking Over Things that Burn... 209
PGM-FI System..... 290
Power Seat Adjustments..... 86
Power Socket Locations..... 104
Pregnancy, Using Seat Belts..... 18
Protecting Adults and Teens..... 13
  Additional Safety Precautions.... 19
  Advice for Pregnant Women..... 18
Protecting Children..... 35
  General Guidelines..... 35
  Protecting Infants..... 40
  Protecting Larger Children..... 50
  Protecting Small Children 41
  Using Child Seats with
    Tethers..... 48
  Using LATCH 45

R

Radiator Overheating..... 270
Radio/CD Sound System..... 112, 113
Rear A/C Unit..... 111
Rear Audio Control Panel..... 136
Rear Entertainment System..... 132
Rear Lights, Bulb Replacement... 247
Rear View Camera and Monitor.. 155
Rear View Mirror..... 95
Rear Window Defogger..... 77
Rear Window Wiper and Washer.. 73
Reclining the Seat Backs..... 86, 87
Reclining the Second Seats 89
Reclining the Third Seat..... 90
Reminder Lights..... 60
Remote Audio Controls..... 130
Remote Control (RES) 138
Remote Transmitter..... 83

Replacement Information
Engine Oil and Filter 238
Fuses 277
Light Bulbs 245
Schedule 229
Timing Belt 244
Tires 255
Wiper Blades 250
Replacing Seat Belts After a Crash 23
Reserve Tank, Engine Coolant 192
Reverse Gear Position 203
Rotation, Tire 254

S

Safety Belts 10, 21
Safety Defects, Reporting* 298
Safety Features 9
Airbags 11
Door Locks 13
Head Restraints 15
Seat Belts 10, 16
Seats & Seat-Backs 13, 14
Safety Labels, Location of 55
Safety Messages ii
Satellite Radio, XM 118
Seat Belts 10, 21
Additional Information 21
Automatic Seat Belt Tensioners 22
Cleaning 249
Lap/Shoulder Belt 21
Maintenance 23
Reminder Light and Beeper 21, 60
System Components 21
Use During Pregnancy 18
Wearing a Lap/Shoulder Belt 16
Seats 86
Adjusting the Second Seat 89
Adjusting the Third Seat 90
Folding the Second Seat 89
Folding the Third Seat 90
Head Restraints 88
Third Row Access 90
Security System 145
Serial Number 282
Service Intervals 231
Service Manual* 299
Service Station Procedures 189
Shifting the Automatic Transmission 202
Shift Lever Position Indicator 202
Shift Lock Release 205
Side Airbags 29
Side Curtain Airbags 31
Side Marker Lights, Bulb Replacement in 246
Signaling Turns 74
Snow Tires 256
Sound System 112, 118, 123
Spare Tire
Inflating 252, 260
Specifications 285
Specifications Charts 284
Speed Control 146
Speedometer 68
SRS, Additional Information 24
Additional Safety Precautions 34
Airbag System Components 24
Airbag Service 33
How the SRS Indicator Works ... 32
How Your Front Airbags Work 26

CONTINUED

Index

How Your Side Airbags Work.... 29
How Your Side Curtain Airbags Work..... 31
SRS Indicator..... 32, 60
START (Ignition Key Position) 81
Starting the Engine..... 201
With a Dead Battery 268
State Emissions Testing 292
Steam Coming from Engine..... 270
Steering Wheel
Adjustment 78
Anti-theft Column Lock 81
Stereo Sound System 112, 118, 123
Storing Your Vehicle..... 258
Sun Visor..... 103
Supplemental Restraint System
Servicing 33
SRS Indicator..... 32, 60
System Components..... 24
Synthetic Oil..... 238

T

Tachometer 68
Taillights, Changing Bulbs in..... 247
Taking Care of the Unexpected .. 259
Technical Descriptions
DOT Tire Quality Grading 286
Emissions Control Systems..... 289
Three Way Catalytic Converter..... 291
Temperature Gauge 69
Tensioners, Seat Belts 22
Theft Protection..... 131
Three Way Catalytic Converter... 291
Timing Belt..... 244
Tire Chains 256
Tire, How to Change a Flat 261
Tire Labeling 288
Tire Pressure Monitoring System (TPMS) 207
Low Tire Pressure Indicator..... 66, 207
Tire Pressure Monitor 66, 208
TPMS Indicator 66, 208
Tires 252
Air Pressure 252
Checking Wear 253
Compact Spare 260
DOT Tire Quality Grading 286
Inflation 252
Inspection 253
Maintenance..... 254
Replacing 255
Rotating..... 254
Snow 256
Specifications 285
Tire Chains 256
Towing
A Trailer..... 216
Emergency Wrecker 275
Equipment and Accessories..... 219
Weight Limit 215
Trailer Loading 217
Trailer Towing Tips 222
Transmission
Checking Fluid Level 242
Fluid Selection..... 242
Identification Number..... 282
Shifting the Automatic..... 202
Treadwear 286
Trip Computer 149
Trip Meter 69
Turn Signals 74
Tools, Tire Changing 261

U

Unexpected, Taking Care of the 259
Uniform Tire Quality Grading 286
Unleaded Gasoline..... 188
Used Oil, How to Dispose of 239

V

Vanity Mirror 103
Vehicle Capacity Load 196
Vehicle Dimensions..... 284
Vehicle Identification Number..... 282
Vehicle Stability Assist (VSA) System..... 213
VSA System Indicator..... 65, 213
VSA Activation Indicator 65, 213
VSA Off Switch 214
Vehicle Storage..... 258
Ventilation 108
VIN 282
Viscosity, Oil..... 237
VTM-4 Lock 206

W

WARNING, Explanation of ii
Warning Labels, Location of 55
Warranty Coverages* 297
Washer, Windshield
Checking the Fluid Level 241
Level Indicator 63
Operation 71
Wheels
Adjusting the Steering 78
Wrench 263
Windows
Operating the Power 92
Rear, Defogger 77
Windshield
Defroster 109
Washers 71
Wipers, Windshield
Changing Blades..... 250
Operation 71
Rear Windshield Wiper and Washer..... 73
Worn Tires 253
Wrecker, Emergency Towing..... 275

X

XM Satellite Radio 118

* : U.S. and Canada only

Service Information Summary

Gasoline:
Premium unleaded gasoline, pump octane number of 91 or higher.

Fuel Tank Capacity:
20.4 US gal (77.0 ℓ)

Recommended Engine Oil:
API Premium grade 5W-20 detergent oil (see page 237).

Oil change capacity (including filter):
4.5 US qt (4.3 ℓ)

Automatic Transmission Fluid:
Honda ATF-Z1 (Automatic Transmission Fluid) preferred, or a DEXRON® III ATF as a temporary replacement (see page 242).

Power Steering Fluid:
Honda Power Steering Fluid preferred, or another brand of power steering fluid as a temporary replacement. Do not use ATF (see page 244).

Brake Fluid:
Honda Heavy Duty Brake Fluid DOT 3 preferred, or a DOT 3 or DOT4 brake fluid as a temporary replacement (see page 243).

Tire Pressure (measured cold):
Front/Rear:
32 psi (220 kPa , 2.2 kgf/cm^2)
Compact Spare Tire:
60 psi (420 kPa , 4.2 kgf/cm^2)