1993 Ford Probe L4-121 2.0L DOHC VIN A MFI

1st POSITION
COUNTRY
1 = United States
2 = Canada
3 = South America
3 = Mexico
4 = United States
6 = Australia
9 = Brazil
J = Japan
K = Korea
L = Taiwan
W = Germany

2nd POSITION
MAKE
B = Ford
C = Ford
C = Imported Truck
F = Ford
F = Mazda
F = Mercury
L = Lincoln
M = Mercury
N = Continental
N = Ford
Z = Ford

3rd POSITION
TYPE
A = Passenger Car
A = Imported Mercury Tracer
B = Bus
B = Passenger Car
C = Truck, Stripped Chassis
C = Basic, Stripped Chassis
D = Incomplete Vehicle
E = Passenger Car
F = Equiped Without Power Train
F = Imported, Incomplete Truck
H = Incomplete Vehicle
I = Passenger Car
J = Incomplete Vehicle
J = Passenger Car
J = Imported Car, Festiva
M = Multi Purpose Vehicle
N = Passenger Car
P = Passenger Car, Imported
R = Passenger Car
T = Truck, Complete
V = Passenger Car
0 = Imported - Fiesta
1 = Imported - Merker/Scorpio
1 = Passenger Car, Imported
2 = Courier - Complete
2 = Multi Purpose Vehicle
3 = Incomplete Vehicle
4 = Multi Purpose Vehicle
4 = Courier - Incomplete
4 = Truck, Complete
6 = Imported - Festiva

4th POSITION
RESTRAINT SYSTEM
B = Active Belts
C = Air Bags & Active Belts
D = Active Belts
L = Air Bags & Active Belts
P = Passive & Active Belts

5th POSITION
IDENTIFICATION
M = Lincoln/Mercury Make
P = Passenger Car (82-89)
P = Ford Make (90-94)
T = Imported & Non-Ford Built

6th & 7th POSITION
BODY SERIES NUMBER

8th POSITION
ENGINE CODE
A = 2.3-L4, EFI/OHC
A = 2.0-L4, MFI, Mazda (93-94)
B = 3.3-V6, 1 Barrel
B = 2.5-V6, MFI, Mazda (93-94)
C = 2.2-L4, EFI (89-92)
C = 3.8-V6, 2 Barrel (84-86)
C = 3.8-V6, EFI (87-90)
C = 3.8-V6, Supercharged (90)
D = 2.3-L4, EFI/Turbo (83)
D = 2.5-L4, CFI (86-90)
D = 5.0-V8, MFI (93-94)
E = 5.0-V8, EFI/HO
E = 5.0-V8, MFI/HO (93)
F = 5.0-V8, CFI/EFI
G = 5.8-V8, 2 Barrel
H = 1.3-L4, EFI, Mazda
H = 1.3-L4, MFI, Mazda (93-94)
H = 2.0-L4, Diesel
J = 1.9-L4, CVH SEFI (93-94)
J = 1.9-L4, SFI
K = 1.3-L4, 2-V, Mazda
K = 1.9-L4, HO-CVH-SEFI (94)
L = 2.4-V6, Diesel/Turbo (84-85)
L = 2.2-L4, EFI/TC (89-92)
L = 2.2-L4, MFI/TC (93)
M = 5.0-V8, CFI or EFI/High Output
M = 2.3-L4, EFI (91-92)
M = 2.3-L4, MFI (93)
N = 2.5-L4, EFI
N = 3.2-V6, DOHC (93)
P = 2.3-L4, EFI/TC
P = 3.2-V6, SHO DOHC (93-94)
R = 2.3-L4, HSC (83-85)
R = 2.2-L4, EFI/Turbo (89-90)
R = 3.8-V6, OHV
S = 2.3-L4, HSC/CFI/High Output/EFI
T = 2.3-L4, EFI/Turbo/IC
T = 5.0-V8, EFI (91-92)
T = 5.0-V8, MFI (93-94)
U = 3.0-V6, EFI
U = 3.0-V6, MFI (93-94)
V = 2.9-V6, Fuel Injected
V = 4.6-V8, MFI (93-94)
W = 2.3-L4, EFI/Turbo
W = 4.6-V8, EFI (91-92)
W = 4.6-V8, MFI (93-94)
X = 3.3-V6, Fuel Injected
X = 2.3-L4, HSC/CFI/EFI
X = 2.3-L4, MFI (93-94)
Y = 3.0-V6, SHO/EFI
Y = 3.0-V6, MFI (93-94)
Z = 1.6-L4, EFI/Mazda (91-92)
Z = 1.6-L4, MFI (93-94)
1 = 1.3-L4, Fuel Injected
1 = 3.0-V6, MFI Flex Fuel (93-94)
2 = 1.6-L4, Fuel Injected

8th POSITION (Cont'd)
3 = 3.8-V6, CFI
3 = 3.8-V6, 2 Barrel (Canada)
4 = 1.6-L4, FI/High Output (83-85)
4 = 3.8-V6, EFI/SEFI (87-92)
4 = 3.8-V6, MFI (93-94)
5 = 1.6-L4, EFI/Mazda
6 = 1.6-L4, EFI/Turbo
6 = 2.3-L4, Propane
6 = 1.6-L4, EFI/TC/Mazda (91-92)
6 = 1.6-L4, MFI/TC/Mazda (93-94)
7 = 1.6-L4, Methanol/High Output
8 = 1.6-L4, EFI/Turbo
8 = 1.8-L4, EFI/Mazda
8 = 1.8-L4, MFI/Mazda (93-94)
9 = 1.9-L4, CFI

9th POSITION
CHECK DIGIT

10th POSITION
MODEL YEAR
C = 1982
D = 1983
E = 1984
F = 1985
G = 1986
H = 1987
J = 1988
K = 1989
L = 1990
M = 1991
N = 1992
P = 1993
R = 1994

11th POSITION
ASSEMBLY PLANT
A = Atlanta, GA
B = Oakville, Ontario, Canada
D = Avon Lake, OH
E = Mahwah
E = Niehl, West Germany
F = Dearborn, MI
G = Chicago, IL
H = Lorain, OH
J = Los Angeles, CA
J = Monterrey
K = Kansas City, MO
M = West Germany
N = Norfolk, VA
P = Twin Cities, MN
R = Hermosillo, Mexico
R = San Jose, CA
S = Allen Park, MI
T = Metuchen, WI
T = Edison
U = Louisville, KY
W = Wayne, MI
X = St. Thomas, Canada
Y = Wixom, MI
Z = St. Louis, MO
2 = Taiwan
5 = Flat Rock, MI
6 = Kia, Korea
8 = Broadmeadows, Australia

12th Thru 17th POSITION
PRODUCTION SEQUENCE NUMBER

VIN Defined

Powertrain Management: Application and ID
Engine Identification

Automatic Transmission

Engine VIN Code I.D. [1] ..... A
Engine Displacement ..... 2.0L (121.5 cid)
Engine Configuration ..... In-Line 4
Fuel Control System ..... Multiport Fuel Injection (MFI)
Ignition System [2] ..... Distributor Ignition (DI)
Computer System [3] ..... Mazda Engine Control Systems (MECS)

Remarks:
[1] Eighth digit of VIN denotes engine code.
[2] Automatic transaxle only.
[3] Automatic transaxle only.

Manual Transmission

Engine VIN Code I.D. [1] ..... A
Engine Displacement ..... 2.0L (121 cid)
Engine Configuration ..... In-Line 4
Fuel Control System ..... Multi-Point Fuel Injection (MFI)
Ignition System [2] ..... Distributor Ignition (DI)
Computer System [3] ..... Electronic Engine Controls (EEC-IV)

Remarks:
[1] The eighth digit of the VIN denotes engine code.
[2] Manual transaxle only.
[3] Manual transaxle only.

Powertrain Management: Application and ID
SAE J1930 Component Acronyms

Automatic Transmission

SAE J1930 terms were not selected on the basis of what component names were the ones commonly used by most auto manufacturers. Instead, the SAE used a logical method for describing components in which modifiers are added to a base word in order of decreasing significance. For example: Idle Air Control Valve. The base word is "valve." What kind of valve is it? A "control" valve. What does it control? "Air." What kind of air? "Idle" air.

BARO ..... Barometric Pressure Sensor
BOO ..... Brake On/Off Switch
BPA ..... Bypass Air
CANP ..... Carbon Canister Storage / Purging
CONV ..... Conventional Systems
CKP ..... Crankshaft Position Sensor
CPP ..... Clutch Pedal Position Switch
CVS ..... Control / Vent Solenoids
DI ..... Distributor Ignition
DI TFI-IV ..... Distributor Ignition (TFI-IV)
DLC ..... Data Link Connector
DMIVA ..... Distributor Mounted Ignition Vacuum Advance
DRL ..... Daytime Running Lamp Relay (Canada Only)
ECT ..... Engine Coolant Temperature Sensor
EGR ..... Exhaust Gas Recirculation
EGRC ..... EGR Control Solenoid
EGRM ..... Exhaust Gas Recirculation Modulator Valve
EGRT ..... EGR Temperature Sensor
EGRV ..... EGR Vent Solenoid
EVAP ..... Evaporative Emission System
EVP ..... EGR Valve Position Sensor
EVR ..... EGR Vacuum Regulator Solenoid
GND ..... Ground
HO2S ..... Heated Oxygen Sensor
HSIA ..... High Speed Inlet Air
IAC ..... Idle Air Control
IDL ..... Idle Switch
IMRC ..... Intake Manifold Runner Control
KAPWR ..... Keep Alive Power
KS ..... Knock Sensor
MAF ..... Mass Air Flow Sensor
MC-VAF ..... Measuring Core - Volume Air Flow Sensor
MFI ..... Multiport Fuel Injection
MIL ..... Malfunction Indicator Lamp
O2S ..... Oxygen Sensor
PCM ..... Powertrain Control Module
PCV ..... Positive Crankcase Ventilation
PNPS ..... Park/Neutral Position Switch
PSP ..... Power Steering Pressure Switch
SFI ..... Sequential Multiport Fuel Injection
SPOUT ..... Spark Output
STI ..... Self Test Input
STO ..... Self Test Output
TI3 ..... Transistorized Ignition 3-Pin
TP ..... Throttle Position Sensor
TWC ..... Three-Way Catalytic Converter
VPWR ..... Vehicle Power
VREF ..... Reference Voltage
VRIS ..... Variable Resonance Induction System
VSS ..... Vehicle Speed Sensor
WOT ..... Wide Open Throttle Switch

Manual Transmission

J1930 Terminology List

NOTE: Certain Ford component names have been changed in this publication to conform to Society of Automotive Engineers (SAE) directive J1930.

SAE J1930 standardizes automotive component names for all vehicle manufacturers.

This chart lists new 1993 SAE J1930 component names and the obsolete 1992 component names.

New Term	New Acronyms/Abbreviations	Old Acronyms/Term
4X4 Low	4X4L	— 4X4L — 4X4 Low
Air Conditioning	A/C	— A/C — Air Conditioning
Air Conditioning Clutch	ACC	— ACC — Air Conditioning Clutch
Air Conditioning Cyclic Switch	ACCS	— ACCS — Air Conditioning Cyclic Switch
Air Conditioning Demand	ACD	— ACD — Air Conditioning Demand
Air Conditioning On	ACON	— ACON — Air Conditioning On
Automatic Ride Control	ARC	— ACL — Acceleration Signal
Barometric Pressure	BARO	— BP — Barometric Pressure
Battery Positive Voltage	B+	— BATT+ — Battery Positive
Blower	BLR	— BLR — Blower
Brake On/Off	BOO	— BOO — Brake On/Off
Bypass Air	BPA	— BPA — Bypass Air
Canister Purge	CANP	— CANP — Canister Purge
Charge Air Cooler	CAC	— Intercooler
Clutch Pedal Position switch	CPP switch	— CES — CIS — Clutch Engage Switch — Clutch Interlock Switch
Coast Clutch Solenoid	CCS	— CCS — Coast Clutch Solenoid
Computer Control Dwell	CCD	— CCD — Computer Control Dwell

TB-2632-A

Figure 1

A TO C

J1930 Terminology List

New Term	New Acronyms/Abbreviations	Old Acronyms/Term
Constant Control Relay Module	CCRM	— IRCM — Integrated Relay Control Module
Crankshaft Position sensor	CKP sensor	— CPS — VRS — Variable Reluctance Sensor
Cylinder Identification	CID	— CID — Cylinder Identification
Data Link Connector	DLC	— Self-Test connector
Data Negative	DATA-	— DATA- — Data Negative
Data Output Line	DOL	— DOL — Data Output Line
Data Positive	DATA+	— DATA+ — Data Positive
Daytime Running Lamps	DRL	— DRL — Daytime Running Lamps
Defroster	DEF	— DEF — Defroster
Diagnostic Test Mode	DTM	— Self-Test mode
Diagnostic Trouble Code	DTC	— Self-Test code
Differential Pressure Feedback EGR	DPFE	— DPFE — Differential Pressure Feedback EGR
Distributor Ignition	DI	— CBD — DS — TFI — Closed Bowl Distributor — Duraspark Ignition — Thick Film Ignition
Dual Overhead Cam	DOHC	— DOHC — Dual Overhead Cam
Dual Plug Inhibit	DPI	— DPI — Dual Plug Inhibit
EGR Pressure Transducer	EPT	— EPT — EGR Pressure Transducer
EGR Temperature	EGRT	— EGRT — EGR Temperature
EGR Vacuum Regulator	EVR	— EVR — EGR Vacuum Regulator
EGR Valve Position	EVP	— EVP — EGR Valve Position

TB-2633-A

Figure 2

C TO E

J1930 Terminology List

New Term	New Acronyms/Abbreviations	Old Acronyms/Term
Electronic Air Pump	EAP	— EAP — Electronic Air Pump
Electronic Engine Control	EEC	— EEC — Electronic Engine Control
Electronic Ignition	EI	— DIS — EDIS — Distributorless Ignition System — Electronic Distributorless Ignition System
Electronic Pressure Control	EPC	— EPC — Electronic Pressure Control
Electronic Secondary Air Injection	EAIR	— EAM — Electronic Air Management
Engine Coolant Temperature	ECT	— ECT — Engine Coolant Temperature
Engine RPM sensor	RPM sensor	— RPMS — Engine RPM sensor
Exhaust Gas Recirculation	EGR	— EGR — Exhaust Gas Recirculation
Fan Control	FC	— EDF — Electro-Drive Fan
Flexible Fuel sensor	FF sensor	— FCS — FFS — FFV — Fuel Compensation Sensor — Flex Fuel Sensor
Flexible Fuel vehicle	FF vehicle	— FFV — Flexible Fuel Vehicle
Fuel Pressure Regulator Control	FPRC	— FPRC — Fuel Pressure Regulator Control
Fuel Pump	FP	— FP — Fuel Pump
Fuel Pump Monitor	FPM	— FPM — Fuel Pump Monitor
Governor Control Module	GCM	— GEM — Governor Electronic Module
Ground	GND	— GND — Ground
Headlamp	HDL	— HDL — Headlamp

TB-2634-A

Figure 3

E TO H

J1930 Terminology List

New Term	New Acronyms/Abbreviations	Old Acronyms/Term
Heated Oxygen Sensor	HO2S	— HEGO — Heated Exhaust Gas Oxygen Sensor
High Fan Control	HFC	— HEDF — High Speed Electro-Drive Fan
High Fuel Pump	HFP	— HFP — High Fuel Pump
High Output	HO	— HO — High Output
High Swirl Combustion	HSC	— HSC — High Swirl Combustion
Idle Air Control	IAC	— ISC — Idle Speed Control
Idle Air Control Bypass Air	IAC BPA	— ISC-BPA — Idle Speed Control — Bypass Air
Ignition Control Module	ICM	— DIS module — EDIS module — TFI module
Ignition Diagnostic Monitor	IDM	— IDM — Ignition Diagnostic Monitor
Inertia Fuel Shutoff switch	IFS switch	— Inertia Switch
Intake Air Temperature	IAT	— ACT — Air Charge Temperature
Intake Manifold Runner Control	IMRC	— IAC — Inlet Air Control
Keep Alive Memory	KAM	— KAM — Keep Alive Memory
Keep Alive Power	KAPWR	— KAPWR — Keep Alive Power
Knock Sensor	KS	— KS — Knock Sensor
Low Fan Control	LFC	— EDF — Electro-Drive Fan
Low Fuel Pump	LFP	— LFP — Low Fuel Pump
Malfunction Indicator Lamp	MIL	— CEL — "CHECK ENGINE" Light — "SERVICE ENGINE SOON" Light

TB-2635-A

Figure 4

H TO L

J1930 Terminology List

New Term	New Acronyms/Abbreviations	Old Acronyms/Term
Manifold Absolute Pressure	MAP	— MAP — Manifold Absolute Pressure
Manifold Absolute Pressure Per Altitude	MAPPA	— GMAPPA — Governor Manifold Absolute Pressure Per Altitude
Manual Lever Position	MLP	— MLP — Manual Lever Position
Mass Air Flow	MAF	— MAF — Mass Air Flow
Mass Air Flow Return	MAF RTN	— MAF RTN — Mass Air Flow Return
Multiport Fuel Injection	MFI	— EFI — Electronic Fuel Injection
Octane Adjust	OCT ADJ	— OCT ADJ — Octane Adjust
Overhead Cam	OHC	— OHC — Overhead Cam
Oxidation Catalytic Converter	OC	— COC — Conventional Oxidation Catalyst
Positive Crankcase Ventilation	PCV	— PCV — Positive Crankcase Ventilation
Power Ground	PWR GND	— PWR GND — Power Ground
Power Steering Pressure switch	PSP switch	— PSPS — Power Steering Pressure Switch
Powertrain Control Module	PCM	— ECA — ECM — ECU — EEC processor — Engine Control Assembly — Engine Control Module — Engine Control Unit
Pressure Feedback EGR	PFE	— EPT — Exhaust Pressure Transducer
Profile Ignition Pickup	PIP	— PIP — Profile Ignition Pickup
Programmable Speedometer/ Odometer Module	PSOM	— PSOM — Programmable Speedometer/ Odometer Module

TB-2636-A

Figure 5

M TO P

J1930 Terminology List

New Term	New Acronyms/Abbreviations	Old Acronyms/Term
Pulsed Secondary Air Injection	PAIR	— MPA — PA — Thermactor II — Managed Pulse Air — Pulse Air
Reduction Oxidation Catalytic Converter	REDOX	— REDOX — Reduction Oxidation Catalytic Converter
Scan Tool	ST	— GST — NGS — Generic Scan Tool — New Generation STAR Tester
Secondary Air Injection	AIR	— AM — CT — MTA — Air Management — Conventional Thermactor — Managed Thermactor Air — Thermactor
Secondary Air Injection Bypass	AIRB	— AM1 — TAB — Air Management 1 — Thermactor Air Bypass
Secondary Air Injection Diverter	AIRD	— AM2 — TAD — Air Management 2 — Thermactor Air Diverter
Self-Test Input	STI	— STI — Self-Test Input
Self-Test Output	STO	— STO — Self-Test Output
Sequential Multiport Fuel Injection	SFI	— SEFI — Sequential Electronic Fuel Injection
Shift Indicator Lamp	SIL	— SIL — Shift Indicator Lamp
Shift Solenoid	SS	— SS — Shift Solenoid
Signal Return	SIG RTN	— SIG RTN — Signal Return
Solid State Relay	SSR	— SSR — Solid State Relay
Spark Output	SPOUT	— SAW — Spark Angle Word

TB-2637-A

Figure 6

P TO S

J1930 Terminology List

New Term	New Acronyms/Abbreviations	Old Acronyms/Term
Speed Density	SD	— SD — Speed Density
Super High Output	SHO	— SHO — Super High Output
Supercharger/Supercharged	SC	— SC — Supercharger/Supercharged
Tachometer	TACH	— TACH — Tachometer
Three Way Catalytic Converter	TWC	— TWC — Three Way Catalytic Converter
Three Way + Oxidation Catalytic Converter	TWC+OC	— TWC & COC — Three Way Catalyst and Conventional Oxidation Catalyst
Throttle Body	TB	— TB — Throttle Body
Throttle Body Injection	TBI	— CFI — Central Fuel Injection
Throttle Position	TP	— TP — Throttle Position
Throttle Position Output	TPOUT	— TPOUT — Throttle Position Output
Torque Converter Clutch	TCC	— CCC — CCO — MCCC — Converter Clutch Control — Converter Clutch Override — Modulated Converter Clutch Control
Torque Converter Clutch solenoid	TCC solenoid	— LUS — MLUS — Lock Up Solenoid — Modulated Lock Up Solenoid
Transmission Control Module	TCM	— 4EAT Module
Transmission Control Switch	TCS	— TCS — Transmission Control Switch
Transmission Control Indicator Lamp	TCIL	— OCIL — Transmission Control Indicator Lamp
Transmission Oil Temperature	TOT	— TOT — Transmission Oil Temperature

TB-2638-A

Figure 7

S TO T

J1930 Terminology List

New Term	New Acronyms/Abbreviations	Old Acronyms/Term
Transmission Range Reverse	TRR	— TSR — Transmission Select Switch Reverse
Transmission Range Overdrive	TROD	— TSOD — Transmission Select Switch Overdrive
Transmission Range Drive	TRD	— TSD — Transmission Select Switch Drive
Transmission Range Low	TRL	— TSL — Transmission Select Switch Low
Transmission Speed Sensor	TSS	— TSS — Transmission Speed Sensor
Turbocharger/Turbocharged	TC	— TC — Turbocharger/Turbocharged
Variable Control Relay Module	VCRM	— VRCM — Variable Relay Control Module
Vehicle Power	VPWR	— VPWR — Vehicle Power
Vehicle Speed Sensor	VSS	— VSS — Vehicle Speed Sensor
Wide Open Throttle	WOT	— WOT — Wide Open Throttle

TB-2639-A

Figure 8

T TO W

Vehicle: Symptom Related Diagnostic Procedures

TEST STEP		RESULT ▶	ACTION TO TAKE
D1	RIDE HEIGHT		
	• Check ride height between the axle and rear bumper bracket on frame rail. • **Is ride height correct?**	Yes ▶ No ▶	GO to **D2.** CHECK to make sure vehicle is not abnormally loaded. CORRECT ride height if necessary. GO to **D2.**
D2	DRIVELINE ANGLES		
	• Check driveline angles. • **Are driveline angles correct?**	Yes ▶ No ▶	GO to **D3.** CORRECT driveline angles. GO to **D3.**
D3	AXLE RING AND PINION		
	• If driveline angle corrections do not eliminate vibration, check ring and pinion backlash. • **Is ring and pinion backlash within specification?**	Yes ▶ No ▶	GO to Pinpoint Test E. ADJUST or REPLACE ring and pinion gearset. If vibration still exists, GO to Pinpoint Test **E.**

Driveline Angles Diagnosis

TEST STEP		RESULT ▶	ACTION TO TAKE
C1	WHEELS AND TIRES		
	• Verify that the observed condition is not a high speed shake caused by wheels / tires.	Yes ▶ No ▶	REFER to High Speed Shake Diagnosis for drive-wheel runout and balance procedures. GO to **C2.**
C2	DRIVESHAFT		
	• Inspect driveshaft for undercoating or physical damage. Check index marks (yellow paint daubs) on rear of driveshaft and axle companion flange. These marks should be no more than 90 degrees apart.	No ▶ Yes ▶	GO to **C3.** CLEAN off undercoating or REPLACE damaged driveshaft. If index marks are misaligned, GO to **C6.** CHECK for vibration at road test speed. If still present, GO to **C3.**
C3	DRIVESHAFT RUNOUT		
	• With vehicle on hoist, measure runout at front, center and rear of driveshaft. Maximum runout is 0.89 mm (0.035 inch).	Within specification ▶ At front or center out of specification ▶ At rear out of specification ▶	GO to **C7.** GO to **C4.** MARK the rear runout high point. GO to **C5.**

Driveline Vibration Diagnosis

TEST STEP		RESULT ▶	ACTION TO TAKE
C4	DRIVESHAFT RE-INDEXING AT TRANSMISSION		
	• Note or mark indexing of driveshaft to transmission and axle companion flange. Disconnect the driveshaft, re-index 180 degrees at transmission only and reconnect. Check runout at front and center of driveshaft, maximum runout is 0.89 mm (0.035 inch). NOTE: While driveshaft is removed from vehicle and manipulate U-joints in each direction of rotation. If a U-joint feels stiff or has a "lumpy", "gritty" feel in any direction, replace U-joints or driveshaft. • **Is it within specification?**	Yes ▶ No ▶	CHECK for vibration at road test speed. If still present, mark rear runout high point. GO to C5. GO to C6.
C5	DRIVESHAFT RE-INDEXING AT AXLE		
	• Note or mark indexing of driveshaft to axle companion flange. Disconnect the driveshaft. Re-index 180 degrees at axle and connect. Check runout at rear of driveshaft. Maximum runout is 0.89 mm (0.035 inch). • **Is it within specification?** **INDEXING REAR AXLE FLANGE** 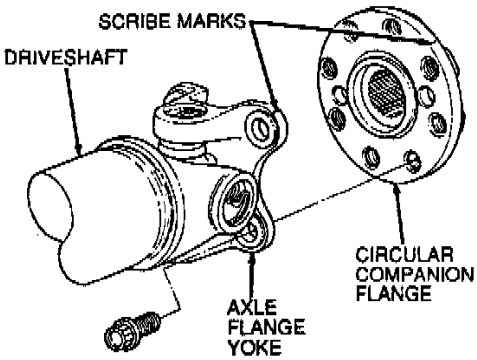 	Yes ▶ No ▶	CHECK for vibration at road-test speed. If still present, GO to C7. GO to C6.
C6	AXLE COMPANION FLANGE		
	• Compare the two high points of runout marked in Test Steps C3 and C4.	Marks within 25 mm (1 inch) of each other ▶ Marks 180 degrees apart ▶	REPLACE driveshaft. RECHECK vibration. REPLACE axle companion flange. CHECK driveshaft runout and road test for vibration. If still present, GO to C7.
C7	DRIVESHAFT VIBRATION		
	• The driveshaft can be re-indexed at both the rear axle and transmission to minimize system imbalance. Refer to driveshaft indexing procedure. • **Is driveshaft balanced?**	Yes ▶ No ▶	Vehicle OK. REFER to driveshaft balancing Test Step F1, if vibration is still present.

Driveline Vibration Diagnosis

TEST STEP		RESULT ▶	ACTION TO TAKE
F1	DRIVESHAFT BALANCING — CLAMP METHOD		
	• Mark rear of driveshaft in four equal parts and number them 1, 2, 3 and 4. • Install hose clamp with screw at position No. 1. • Operate driveline at speed at which customer complained of vibration. • Rotate clamp to each of the other three positions and check for vibration. 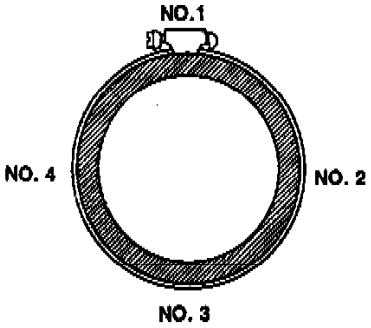 	If vibration is worse in all positions If vibration is better in any one position If vibration is better in any two positions	▶ GO to F4. ▶ GO to F2. ▶ ROTATE clamp screw to a mid-point between the two positions. GO to F2.
F2	INSTALL SECOND CLAMP		
	• Install another clamp, with screw in same position as first clamp. • Operate vehicle at speed at which customer complained of vibration. • **Is vibration minimal?** 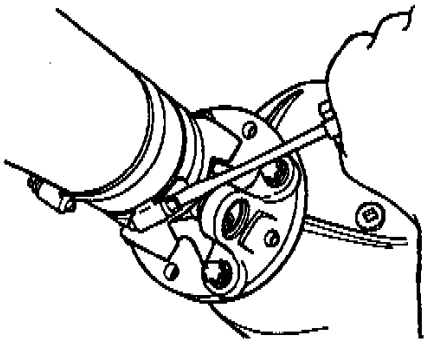	Yes No	▶ Condition corrrected. ▶ GO to F3.

Driveshaft Balance Diagnosis

TEST STEP		RESULT ▶	ACTION TO TAKE
F3	REPOSITION CLAMP		
	• Rotate screws of clamps equally away from each other about 12.7mm (1/2 inch). • Operate vehicle at speed at which customer complained of vibration. • **Is vibration minimal?** 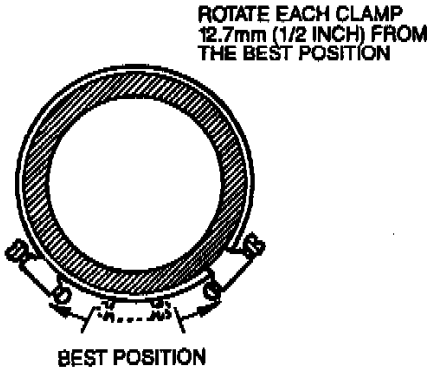 NOTE: If vibration is corrected with the addition of clamps, the clamps will be left on the driveshaft permanently. Check clamp clearance after installation to prevent any contact with floorpan or other parts.	Yes No	▶ Condition corrected. ▶ GO to F4.
F4	ROAD TEST		
	• Install wheels and tires. • Road test vehicle. • **Is vibration minimal?** NOTE: Vibration felt on hoist may be acceptable during road test.	Yes No	▶ Condition corrected. ▶ GO to Pinpoint Test A.

Driveshaft Balance Diagnosis

TEST STEP	RESULT ▶	ACTION TO TAKE
A1 ROAD TEST		
• Accelerate vehicle to the speed which the customer indicated the shake occurred. • **Is a shake present?**	No ▶ Yes ▶	Vehicle OK. GO to **A2.**
A2 INSPECT TIRES		
• Raise vehicle on hoist. Inspect tires for extreme wear or damage, cupping or flat spots. • **Are tires OK?** 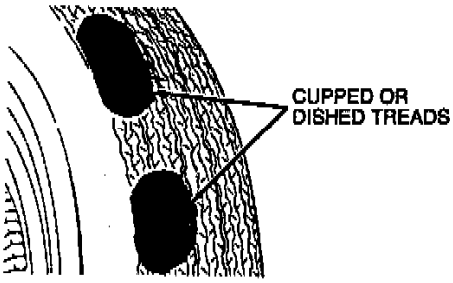 	Yes ▶ No ▶	GO to **A3.** CHECK suspension components for misalignment, abnormal wear, or damage that may have contributed to the tire wear. CORRECT suspension concerns, and REPLACE damaged tires. PERFORM Road Test.
A3 INSPECT WHEEL BEARINGS		
• Spin front tires by hand to check for wheel bearing roughness. Check bearing end play. • **Is end play OK?** 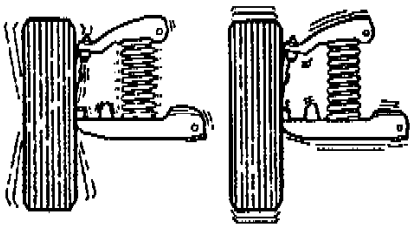	Yes ▶ No ▶	GO to **A4.** ADJUST or REPLACE and lubricate bearings as necessary. PERFORM Road Test.
A4 WHEEL/TIRE RUNOUT ON VEHICLE		
• Measure wheel/tire assembly runouts on vehicle using Rotunda Radial Run-Out Gauge 007-00014 or equivalent. Assembly runout should be less than 1.14 mm (0.045 inch) radial and lateral. Warm up tires prior to taking measurement to eliminate slight flat spotting. • **Is measurement in specification?**	Yes ▶ No ▶	GO to **A9.** GO to **A5.**
A5 WHEEL/TIRE RUNOUT OFF VEHICLE		
• Measure wheel/tire assembly from any position that exceeds 1.14 mm (0.045 inch) radial or lateral. Before removing wheel/tire assembly, mark wheel stud and corresponding bolt hole so assembly can be installed in same position. Remove assembly and mount on wheel balancer. Measure runout as in Step A4. Assembly runout should be less than 1.14 mm (0.045 inch) radial and lateral. • **Is measurement in specification?**	Yes ▶ No ▶	CHECK rotor drum and bolt circle runout. GO to **A8.** GO to **A6.**

High Speed Shake Diagnosis

TEST STEP		RESULT	ACTION TO TAKE
A6	MATCH MOUNTNG		
	• Mark the high runout location on the tire and also on the wheel. Break the assembly down and rotate the tire 180 degrees (half-way around) on the wheel. Inflate the tire and measure the runouts.	Proper balance achieved	BALANCE assembly and INSTALL on vehicle. PERFORM Road Test.
		Improper balance	If high spot is within 101.6mm (4 inch) of first high spot on the tire, REPLACE tire. BALANCE assembly and INSTALL on vehicle. PERFORM Road Test.
		Improper balance	If high spot is not within 101.6mm (4 inches) of first high spot on the tire, GO to A7.
A7	WHEEL RUNOUT		
	• Dismount tire and mount wheel on wheel balancer. Measure runouts on both flanges. Runout should be less than 1.14 mm (0.045 inch) radial and lateral. • **Is there proper runout?**	Yes	LOCATE and MARK low spot on wheel and INSTALL tire matching high spot on wheel. BALANCE assembly and PERFORM Road Test.
	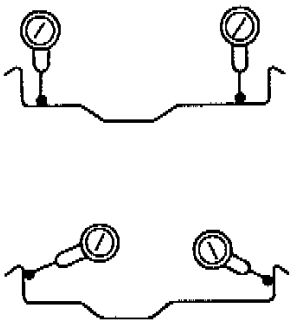	No	REPLACE wheel. CHECK runouts on new wheel. If new wheel is within limits, LOCATE and MARK the low spot. INSTALL tire, matching high spot of tire with low spot of wheel. BALANCE assembly and INSTALL on vehicle. PERFORM Road Test.

High Speed Shake Diagnosis

TEST STEP	RESULT ▶	ACTION TO TAKE
A8 AXLE, ROTOR OR DRUM AND BOLT CIRCLE RUNOUTS		
• For rear wheel positions, remove rotor or drum and measure axle flange face runout (greater than 0.254mm (0.010 inch)). Bolt circuit runout (greater than 0.397mm (0.015 inch)) and drum/rotor pilot radial runout (greater than 0.152mm (0.006 inch)). • For front wheel positions, measure rotor lateral runout (greater than 0.050mm (0.002 inch)) hub flange face runout (greater than 0.06mm (0.002 inch)) and rotor pilot radial runout (greater than 0.04mm (0.002 inch)). • **Are measurements correct?** 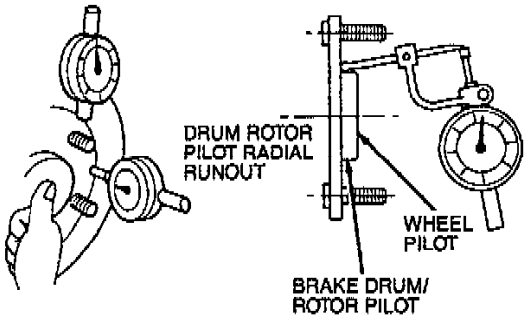 	Yes ▶ No ▶	REPLACE rotor/wheel and PERFORM Road Test. REPLACE rotor (front wheel positions) or axle shaft (rear wheel positions) and PERFORM Road Test.
A9 INSPECT WHEELS		
• If wheels are equipped with locking wheel lug nuts, check that proper counter balance wheel weight is installed opposite locking lug nut. • **Is wheel weight correct?**	Yes ▶ No ▶	GO to **A10.** INSTALL counter. BALANCE wheel weight opposite locking lug nut. PERFORM Road Test.
A10 FRONT TIRES		
• Spin front tires with a wheel balance spinner while vehicle is raised on hoist. Feel for vibration in fender or while seated in vehicle. • **Is vibration felt?**	No ▶ Yes ▶	GO to **A11.** BALANCE front wheel(s). PERFORM Road Test.
A11 REAR TIRES		
• Engage drivetrain while vehicle is raised on hoist. Carefully accelerate the drive wheels while feeling for vibration. • **Is vibration felt?**	No ▶ Yes ▶	GO to **A14.** GO to **A12.**
A12 DRIVETRAIN		
• Remove rear wheels, secure brake drums, if so equipped by installing wheel lug nuts, reversed. Carefully accelerate the drivetrain while feeling for vibration. • **Is vibration felt?**	No ▶ Yes ▶	BALANCE rear wheels. PERFORM Road Test. GO to **A13.**
A13 REAR DRUMS OR ROTORS		
• Remove the brake drums or rotors. Carefully accelerate the drivetrain while feeling for vibration. • **Is vibration felt?**	No ▶ Yes ▶	REPLACE drums or rotors. PERFORM Road Test. GO to Driveline Vibration Diagnosis.
A14 WHEEL BALANCE		
• Balance all wheels not previously balanced. Road test vehicle. • **Are wheels balanced?**	Yes ▶ No ▶	Vehicle OK. GO to **A15.**

High Speed Shake Diagnosis

TEST STEP	RESULT ▶	ACTION TO TAKE
A15 SUBSTITUTE WHEELS AND TIRES		
• Substitute a known good set of wheels and tires. Road test vehicle. • **Is vibration felt?**	No ▶ Yes ▶	INSTALL the original tire/wheel assemblies, one by one, road testing at each step, until the defective tire(s) is identified. REPLACE tire(s) as necessary and RETEST. REFER to Driveline Vibration Diagnosis.

High Speed Shake Diagnosis

TEST STEP	RESULT ▶	ACTION TO TAKE
B1 AIR CLEANER • Check air cleaner for proper installation of base gasket, lid element and air inlet duct assembly. • **Are components properly installed?**	Yes ▶ No ▶	GO to **B2**. CORRECT condition and PERFORM Road Test. If moan persists, GO to **B2**.
B2 POWERTRAIN RESONANCE • Loosen all converter housing-to-engine retaining bolts three-quarter turn and road test. Tighten bolts after test. • **Is moan reduced or eliminated?**	Yes ▶ No ▶	CHANGE or INSTALL damper as indicated and RETEST. If moan still persists, GO to **B3**. GO to **B3**.
B3 ENGINE MOUNTS • Normalize engine mounts by loosening them and, with engine running, shifting transmission from NEUTRAL to DRIVE and back to NEUTRAL. With manual transmission, load engine by slipping clutch in gear. Tighten mounting bolts and road test. • **Is moan reduced or eliminated?** 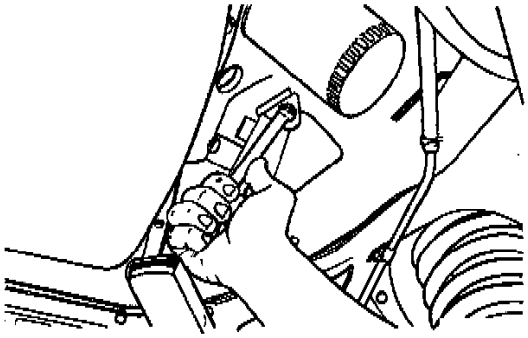	Yes ▶ No ▶	Vehicle OK. GO to **B4**.
B4 EXHAUST SYSTEM • Warm up system to normal operating temperature. Loosen all hanger attachments and reposition hangers until they hang free and straight. Then loosen all flange joints and, with engine running, shift transmission from NEUTRAL to DRIVE and back to NEUTRAL (or load engine with clutch). Tighten all hanger clamps and flanges. Road test vehicle. • **Is moan reduced or eliminated?** 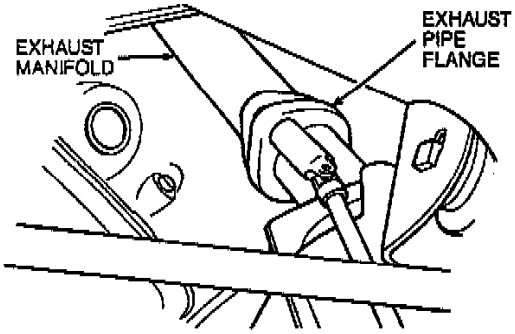 	Yes ▶ No ▶	Vehicle OK. REFER to Engine Accessory Vibration Diagnosis.

Tip-in Moan Diagnosis

Vehicle: Component Tests and General Diagnostics

TEST STEP		RESULT	ACTION TO TAKE
E1	ENGINE RUN-UP		
	• Run-up to problem rpm observed in road test, with vehicle stationary. • **Does vibration occur?**	Yes No	GO to E2. PERFORM stall test in DRIVE with brakes locked (or load engine by slipping clutch in gear with manual transmission). If vibration occurs, GO to Pinpoint Test B.

Engine Accessory Vibration Diagnosis

TEST STEP		RESULT	ACTION TO TAKE
E2	DRIVE BELTS AND PULLEYS		
	• With engine stopped, inspect all engine accessory drive belts and pulleys for wear or damage, and check belt tension, using Belt Tension Gauge T63L-8620-A or equivalent. • Automatic tensioners have belt wear indicator marks. If the indicator mark is not between the min and max marks, the belt is worn or an incorrect belt is installed. • **Are belts or pulleys worn or damaged?** 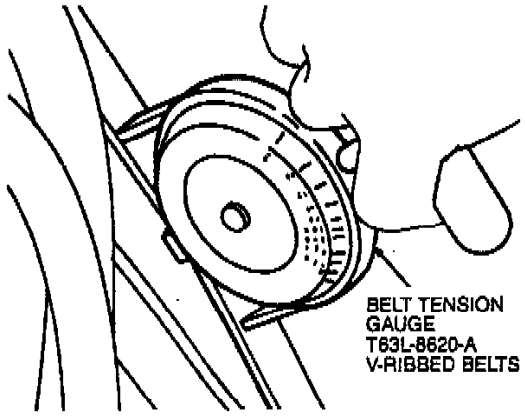 	No Yes	GO to E3. REPLACE worn or damaged belts or pulleys. CORRECT belt tension. GO to E3.
E3	MOUNTING HARDWARE		
	• Inspect mounting brackets and adjusting components for proper alignment and tightness. • **Are mounting and adjusting components secure?**	Yes No	GO to E4. ALIGN and TIGHTEN mounting hardware to specifications. CORRECT belt tension. START UP engine and run-up to problem rpm. If vibration still exists, GO to E4.
E4	ENGINE IDLING		
	• With engine idling, visually check all accessory drive belts and pulleys for misalignment, runout or irregular motion. Maximum runout is 3mm (1/8 inch). • Increase engine rpm.	No misalignment visible Pulley(s) exceeds maximum runout Belt rides up and down on one pulley Belt rides up and down on more than one pulley	GO to E5. REPLACE pulley. REPLACE that pulley. REPLACE belt.
E5	ACCESSORY DRIVE BELT NOISE		
	• Check for "chirps" or squeal in a poly-vee belt by spraying a small amount of water on the grooved side of the belt (use a spray bottle or equivalent). • **Does the noise change?**	Yes No	CHECK for misalignment. CHECK tensioner position. CHECK for worn belt. SERVICE/REPLACE as required. CHECK accessory bearings. REPLACE as required. GO to E6.

Engine Accessory Vibration Diagnosis

TEST STEP		RESULT ▶	ACTION TO TAKE
E6	ACCESSORIES		
	• Run-up engine to problem rpm and, with stethoscope-type device, check each component. • If the source cannot be detected by probing, remove each belt, one at a time, until vibration goes away. • **Is noisy component located?**	Yes ▶ No ▶	REPLACE belt. If vibration still exists, SERVICE or REPLACE component. Possible engine component imbalance. This situation is possible, but unlikely.

Engine Accessory Vibration Diagnosis

TEST STEP		RESULT ▶	ACTION TO TAKE
G1	TIRE WHEEL BEARING INSPECTION		
	• Raise vehicle, inspect tires and check wheel bearings. • **Are bearings OK?**	Yes ▶ No ▶	GO to G2. SERVICE bearings. GO to G2.
G2	BALANCE TIRES		
	• Balance tires and place back on vehicle. • **Does vehicle function properly?**	Yes ▶ No ▶	Vehicle OK. GO to G3.
G3	ROTATE TIRES		
	• Rotate tire and wheel assembly. Front to rear, and rear to front. • **Does vehicle function properly?**	Yes ▶ No ▶	Vehicle OK. GO to G4.

Tire/Wheel Runout

TEST STEP		RESULT	ACTION TO TAKE
G4	CHECK RUNOUT		
	• Check total radial runout and total lateral runout of tire / wheel assembly. NOTE: All runout values shown are for front wheels. Runout values should be increased 0.127mm (0.005 inch) for rear wheels. If both radial and lateral runouts are excessive, resolve lateral concerns before proceeding with radial service procedures.	Radial runout less than 1.01 mm (0.040 inch). Lateral runout less than 1.14 mm (0.045 inch).	In some cases a vibration concern may be caused by tire internal construction inducing force variations which cannot be detected through runout measurement. This condition is diagnosed by installing tire / wheel assemblies (one at a time) from a good vehicle to isolate the offending tire(s). REPLACE tires as necessary. BALANCE tires.
		Radial runout more than 1.01mm (0.040 inch)	GO to **G5.**
		Lateral runout more than 1.14mm (0.045 inch)	GO to **G6.**
G5	INDEX TIRE ON WHEEL		
	• Index tire on wheel. Align highest runout point to wheel low runout point. • **Is total radial runout less than 1.01mm (0.040 inch)?**	Yes	GO to **G6.**
		No	GO to **G7.**
G6	BALANCE TIRES		
	• Check and balance tires. • Road test. • **Is vibration eliminated?**	Yes	Service complete.
		No	In some cases a vibration concern may be caused by tire internal construction inducing force variations which cannot be detected through runout measurement. This condition is diagnosed by installing tire / wheel assemblies (one at a time) from a good vehicle to isolate the offending tire(s). REPLACE tires as necessary. BALANCE tires. PERFORM Road Test.
G7	CHECK WHEEL RADIAL RUNOUT		
	• Check wheel radial runout and ensure it is correct. NOTE: Although maximum wheel runout shown exceeds acceptable total tire / wheel assembly runout, acceptable assembly runout may be achieved by indexing tire on wheel. • **Is wheel runout less than 1.14mm (0.045 inch)?**	Yes	REPLACE tire. BALANCE tire. PERFORM Road Test. If still not ok, CHECK radial runout.
		No	REPLACE wheel. BALANCE tire. PERFORM Road Test. If still not ok, CHECK radial runout.

Tire/Wheel Runout

Engine: Service and Repair
With Automatic Transmission

1. Disarm airbag system.
2. Relieve fuel system pressure.
3. Disconnect battery cables, then remove battery and battery tray from vehicle.
4. Disconnect engine compartment lamp electrical connector, then carefully remove hood assembly.
5. Drain engine oil and the cooling system.
6. Remove air intake system.
7. Remove A/C compressor mounting bolts if equipped, and position compressor aside. Support compressor assembly with wire.
8. Disconnect fuel lines from fuel rail assembly and position aside.

WARNING: Plug disconnected fuel lines to prevent any fuel leakage. Label fuel lines for installation reference.

9. Disconnect all engine wiring connectors and position aside. Label connectors for installation reference.
10. Remove power steering pump belt shield, then loosen power steering pump adjustment bolt.
11. Loosen power steering pump lock bolt and through bolt, then remove power steering belt.
12. Remove power steering hose hold-down bracket mounting bolts and brackets from cylinder head cover.
13. Remove power steering belt adjuster, then disconnect power steering pressure switch connector.
14. Remove power steering pump through bolt and position pump aside.
15. Loosen alternator adjusting bolt, then remove alternator upper mounting bolt and alternator belt.
16. Remove both radiator hoses.
17. Disconnect speed control vacuum line from back righthand side of intake manifold, if necessary.
18. Disconnect vacuum line connecting carbon canister to metal EGR vacuum line.
19. Disconnect EGR temperature sensor connector, if necessary.
20. Disconnect the accelerator cable, then the brake booster vacuum line from back lefthand side of intake manifold.
21. Disconnect heater hoses and remove starter motor upper mounting bolts.
22. Raise and support vehicle, then remove splash shield bolts and splash shields.
23. Disconnect starter motor electrical connector, then remove starter motor.
24. Remove intake manifold support bracket.
25. Remove halfshaft support bearing attaching bolts.
26. Disconnect oil pressure sensor connector.
27. Remove torque converter to flexplate attaching nuts.
28. Remove three engine to transaxle mounting bolts, then the transaxle to engine mounting bolts.
29. Disconnect oxygen sensor electrical connector.
30. Remove converter inlet pipe to catalytic converter attaching nuts.
31. Remove exhaust support attaching bolts, then the converter inlet pipe to exhaust manifold attaching nuts.
32. Support exhaust system with wire, then disconnect remaining alternator wiring.
33. Remove wiring harness hold-down bracket from back of alternator.
34. Remove alternator lower through bolt, then alternator from vehicle.
35. Using crankshaft pulley holder T92C-6316-AH or equivalent, remove crankshaft pulley.
36. Lower vehicle.
37. Slowly raise engine with a jack and remove righthand engine mount.
38. Attach an engine hoist to lifting eyes on engine, then remove remaining transaxle to engine mounting bolts.
39. Remove engine from vehicle.
40. Reverse procedure to install, noting the following:

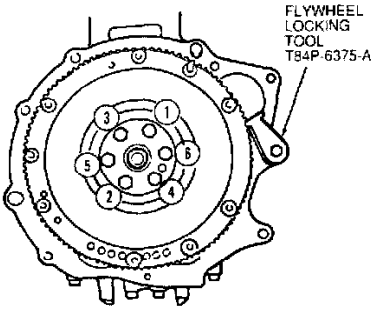

Fig. 3, Flex Plate Tightening Sequence

a. Install flywheel locking tool T84P-6375-A or equivalent, then using sequence shown, torque flex plate mounting bolts in two or three steps to **70-75 ft lb.**

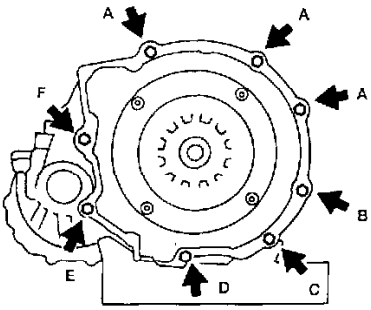

Fig. 4, Transaxle To Engine Bolt Locations (A/T)

b. Tighten transaxle to engine mounting bolts as follows; torque bolts marked ``A'' to **50-73 ft lb**, torque bolts marked ``B'' to **50-73 ft lb,** torque bolts marked ``C'' to **28-38 ft lb**, torque bolts marked ``D'' to **14-18 ft lb**, torque bolts marked ``E'' to **28-38 ft lb**, torque bolts marked ``F'' to **50-73 ft lb**.

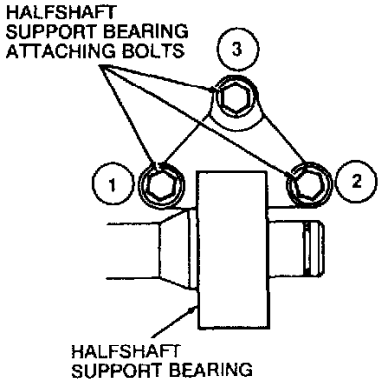

Fig. 5, Halfshaft Support Tightening Sequence

c. Using sequence shown, torque halfshaft support bearing attaching bolts to **32-45 ft lb.**
d. Rearm airbag system.

Engine: Service and Repair
With Manual Transmission

1. Disarm airbag.
2. Relieve fuel system pressure.
3. Disconnect battery cables, then remove battery and battery tray from vehicle.
4. Disconnect engine compartment lamp electrical connector, then carefully remove and set aside hood assembly.
5. Remove air intake system.
6. Drain engine coolant, then remove radiator and radiator hoses.
7. Drain engine oil.
8. Remove A/C compressor mounting bolts, if equipped, and position compressor aside. Support compressor assembly with wire.
9. Disconnect fuel lines from fuel rail assembly and position aside.

WARNING: Plug disconnected fuel lines to prevent any fuel leakage. Label fuel lines for installation reference.

10. Disconnect all engine wiring connectors and position aside. Label connectors for installation reference.
11. Remove power steering pump belt shield, then loosen power steering pump adjustment bolt.
12. Loosen power steering pump lock bolt and through bolt, then remove power steering belt.
13. Remove power steering hose hold-down bracket mounting bolts and brackets from cylinder head cover.
14. Remove power steering belt adjuster, then disconnect power steering pressure switch connector.
15. Remove power steering pump through bolt and position pump aside.
16. Loosen alternator adjusting bolt, then remove alternator upper mounting bolt and alternator belt.
17. Drain engine coolant and remove both radiator hoses.
18. Disconnect speed control vacuum line from back righthand side of intake manifold, if necessary.
19. Disconnect vacuum line connecting carbon canister to metal EGR vacuum line.
20. Disconnect EGR temperature sensor connector, if equipped.
21. Disconnect accelerator cable, then the brake booster vacuum line from back lefthand side of intake manifold.
22. Disconnect heater hoses and remove starter motor upper attaching bolts.
23. Disconnect speed control actuator electrical connector.
24. Remove two speed control actuator attaching nuts and set actuator aside.
25. Remove two fuel filter mounting bracket bolts and set fuel filter and bracket aside.
26. Remove ignition control module.
27. Remove ground wire bracket mounted between transaxle and rear transaxle mount.
28. Remove rear transaxle mount through bolt, then the transaxle ground located at the top rear of the transaxle.
29. Disconnect Brake ON/OFF **(BOO)** switch and Vehicle Speed Sensor **(VSS)** connectors from rear of transaxle.
30. Remove slave cylinder line fitting from slave cylinder. Plug metal line to prevent fluid leakage.
31. Pull spring clips from slave cylinder line mounting brackets, then remove rubber line from metal line.
32. Disconnect Park/Neutral Position **(PNP)** switch from front of transaxle.
34. Raise and support vehicle, then remove front wheels and splash shields.
35. Remove six transverse member attaching bolts, then the transverse member.
36. Remove six transaxle cradle nuts and two bolts, then the transaxle cradle.
37. Remove two transaxle lower mount bolts and the transaxle lower mount.
38. Remove halfshafts as follows:
    a. Using hammer and chisel, carefully raise staked portion of halfshaft attaching nut.
    b. Apply brakes, then remove halfshaft attaching nut.

    NOTE: Discard nut after removal, never reuse nut.

    c. Remove righthand stabilizer control link from lower control arm attaching bracket.
    d. Remove righthand side ball joint clamp bolt, then pry lower control arm from ball joint clamp.
    e. Separate righthand side halfshaft from wheel hub. If halfshaft splines bind, use jaw puller D80L-1002-L or equivalent.

    CAUTION: Never strike halfshaft with any object.

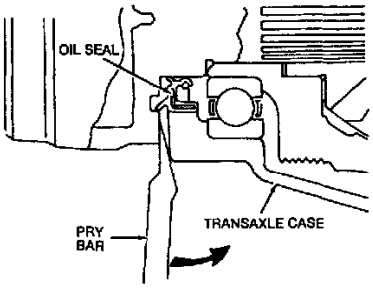

Removing Left Halfshaft

    f. Using an angled pry bar or equivalent, remove lefthand halfshaft by prying between the constant velocity joint outer race and transaxle housing. Carefully tap pry bar end to unseat circlip on side gear end of halfshaft.
    g. Remove three halfshaft support bearing attaching bolts.
    h. Separate righthand halfshaft assembly from differential by carefully prying halfshaft from transaxle.

i. Support halfshaft assemblies and slide out of transaxle.
j. Using transaxle plug set T88C-7025-AH or equivalent, plug transaxle openings to prevent leakage.

39. Remove intake manifold support bracket.
40. Remove rear transaxle mount bolts, then the mount.
41. Disconnect starter motor electrical connector, then remove starter motor.
42. Disconnect oil pressure sensor and oxygen sensor electrical connectors.
43. Remove converter inlet pipe to catalytic converter attaching nuts.
44. Remove exhaust support attaching bolts, then the converter inlet pipe to exhaust manifold attaching nuts.
45. Support exhaust system with wire.
46. Remove extension bar nut and washer, then disengage the bar from the transaxle.
47. Remove transaxle shift linkage through bolt and nut, then disengage shift linkage from transaxle.
48. Remove wiring harness hold-down bracket from back of alternator, then the alternator lower through bolt.
49. Disconnect remaining alternator wiring and remove alternator.
50. Using crankshaft pulley holder T92C-6316-AH or equivalent, remove crankshaft pulley attaching bolt.
51. Remove crankshaft pulley and guide plate.
52. Lower vehicle, then slightly raise engine with a jack and remove righthand engine mount.
53. Attach an engine hoist to lifting eyes on engine, then remove lefthand transaxle mount nuts and bolts.
54. Remove lefthand transaxle mount through bolt, then the mount.
55. Remove engine and transaxle assembly from vehicle.
56. Remove transaxle to engine mounting bolts and separate engine from transaxle.
57. Remove clutch and flywheel.
58. Remove crankshaft rear cover plate bolt and plate.
59. Reverse procedure to install, noting the following:

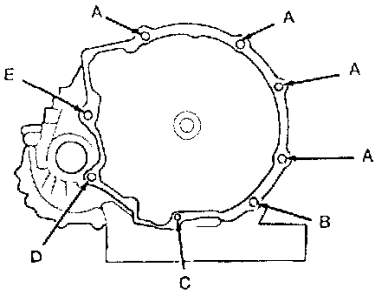

Fig. 7, Transaxle To Engine Bolt Locations (M/T)

a. Tighten transaxle to engine mounting bolts as follows: torque bolts marked ``A" to **66-86 ft lb**, torque bolts marked ``B" to **28-38 ft lb**, torque bolts marked ``C" to **14-18 ft lb**, torque bolts marked ``D" to **28-38 ft lb**, torque bolts marked ``E" to **66-86 ft lb**.

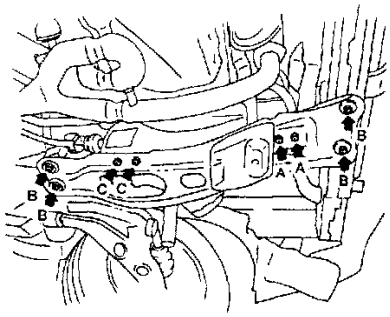

Fig. 8, Transaxle Cradle Bolt Locations

b. Tighten transaxle cradle nuts as follows: torque bolts marked ``A" **55-77 ft lb**, torque bolts marked ``B" **50-68 ft lb**, torque bolts marked ``C" **32-44 ft lb**.
c. Rearm airbag system.

Camshaft: Service and Repair

1. Disconnect battery ground cable, then isolate cable end with electrical tape or equivalent.
2. Remove cylinder head valve cover.
3. Remove power steering pump belt shield, then loosen adjusting bolt.
4. Loosen lock bolt and power steering pump through bolt, then remove power steering belt.
5. Loosen alternator adjusting bolt and alternator upper mounting bolt, then remove alternator belt.
6. Remove timing belt.
7. Holding camshaft with a suitable wrench, remove camshaft sprockets.

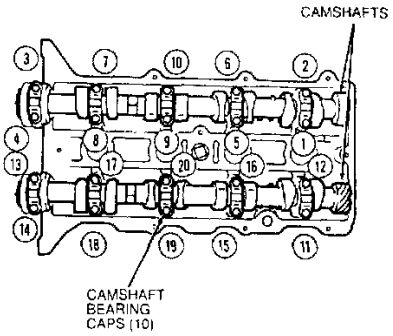

Camshaft Bearing Cap Loosening Sequence

8. Using sequence shown, remove camshaft bearing cap bolts two steps. Camshaft bearing caps are marked for installation reference, ensure caps are installed in their correct position.
9. Remove camshafts.

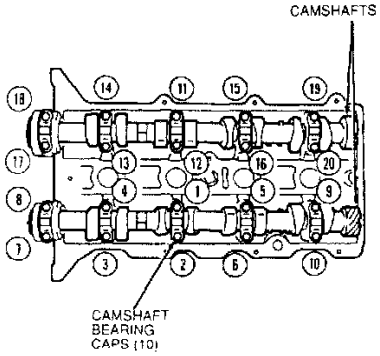

Camshaft Bearing Cap Tightening Sequence

10. Reverse procedure to install. Using sequence shown, torque camshaft bearing cap bolts in three steps as follows:
    a. **35 in lb.**
    b. **71 in lb.**
    c. **100-126 in lb.**

Connecting Rod: Service and Repair

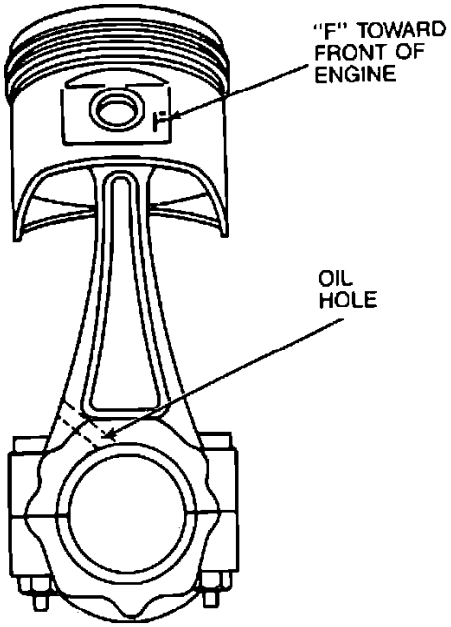

Assembling Piston To Connecting Rod

Assemble piston to connecting rod with F mark on piston and oil hole in connecting rod positioned as shown.

Cylinder Head Assembly: Service and Repair

1. Disconnect battery ground cable, then isolate cable end with electrical tape.
2. Drain cooling system, then remove air intake system.
3. Remove power steering hose hold-down bracket bolts from cylinder head cover.
4. Remove power steering pump belt shield, then loosen adjusting bolt.
5. Loosen lock bolt and power steering pump through bolt.
6. Remove power steering belt.
7. Loosen alternator adjusting bolt, then loosen alternator upper mounting bolt.
8. Raise and support vehicle, then remove righthand splash shield.
9. Loosen lower alternator through bolt, lower vehicle and remove alternator belt.
10. Remove power steering pump through bolt and lock bolt, then position pump aside.
11. Remove alternator bracket nut and bolt, then position bracket aside.
12. Remove exhaust manifold.
13. Carefully remove cylinder head cover.
14. Remove timing belt.
15. Disconnect distributor/coil connectors, then all connectors at coolant temperature sensor housing.
16. Remove coolant temperature sensor housing from cylinder head and discard gasket.
17. Remove two distributor cap attaching screws, then the distributor cap. Position cap and wires aside.
18. Rotate engine until No. 1 piston is at TDC on compression stroke.
19. Remove two distributor hold-down bolts, then the distributor.
20. Remove camshafts.

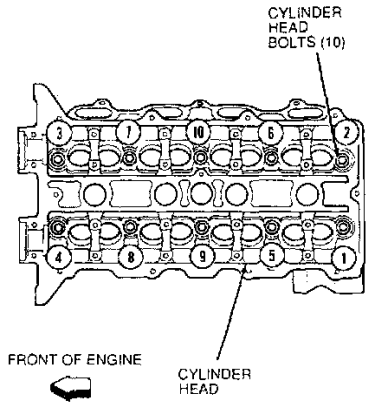

Fig. 10, Cylinder Head Bolt Loosening Sequence

21. Remove cylinder head bolts in sequence. Discard bolts.
22. Remove cylinder head and gasket from engine, then discard gasket.
23. Reverse procedure to install, noting the following:
    a. Ensure cylinder head and cylinder block mating surfaces are clean.
    b. Do not reuse cylinder head bolts.

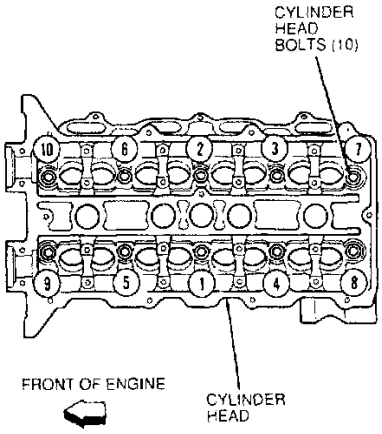

Fig. 11, Cylinder Head Bolt Tightening Sequence

    c. Torque new cylinder head bolts in sequence in two steps to **13-16 ft lb**. After initial tightening, apply a paint mark to cylinder head bolts, then tighten bolts an additional **85-95°** in sequence. Turn all bolts an additional **85-95°**.
    d. Ensure timing marks are aligned on distributor shaft and distributor housing.

Fuel Pressure Release: Service and Repair

WARNING: Do not smoke, carry lighted tobacco or open flame of any type when working on or near any fuel related component. Highly flammable mixtures are always present and may be ignited, resulting in possible personal injury.

CAUTION: Fuel supply lines will remain pressurized for long periods of time after engine shut down. This pressure must be relieved before servicing of the fuel system is begun. A valve is provided on the throttle body for this purpose. Remove the air cleaner and relieve system pressure by using Rotunda pressure gauge tool T80L-9974-A or equivalent and drain the system through the drain tube.

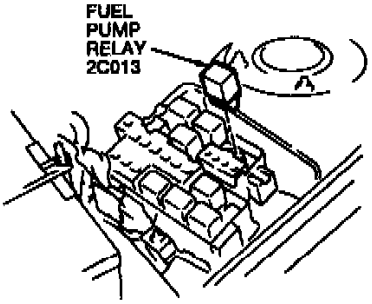

Fuel Pump Relay Location

1. Start engine.
2. To stop pump, remove fuel pump relay. It is located in the engine compartment main fuse panel.
3. After the engine stalls, turn ignition OFF.
4. Install relay.
5. Use a rag to protect from fuel spray when disconnecting hoses. Plug hoses after disconnection.

Valve Cover: Service and Repair

1. Disconnect battery ground cable, then isolate cable end with electrical tape, or equivalent.
2. Remove power steering hose hold-down brackets.
3. Disconnect spark plug wires and wire clips. Mark wires for installation reference.
4. Disconnect breather tube from cover, then PCV valve.

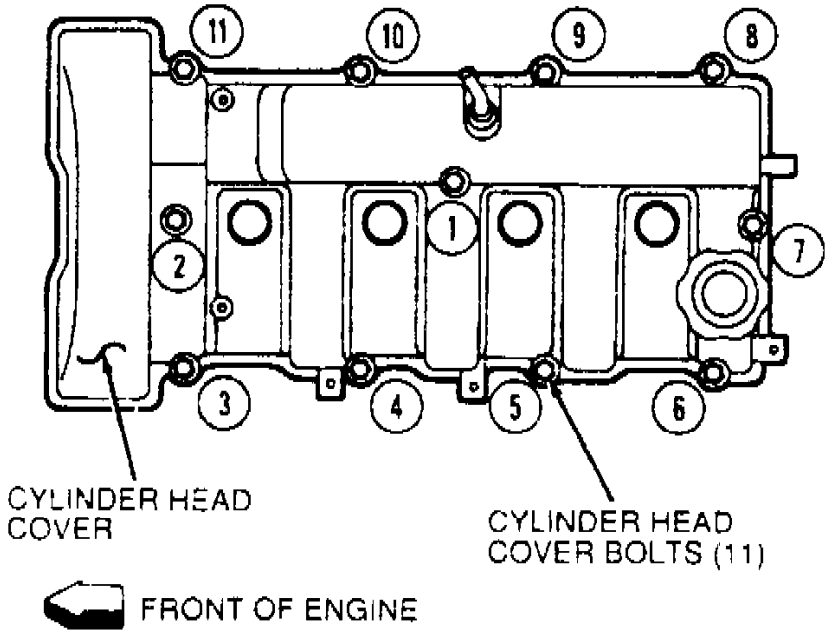

Fig. 12 Cylinder Head Cover Bolt Loosening Sequence

5. Using bolt loosening sequence shown, remove cylinder head cover bolts in two steps.
6. Carefully pry cylinder head cover from cylinder head.
7. Remove cylinder head cover gasket, then discard.
8. Reverse procedure to install, noting following:
   a. Apply a coat of silicone sealant to new cylinder head cover gasket.

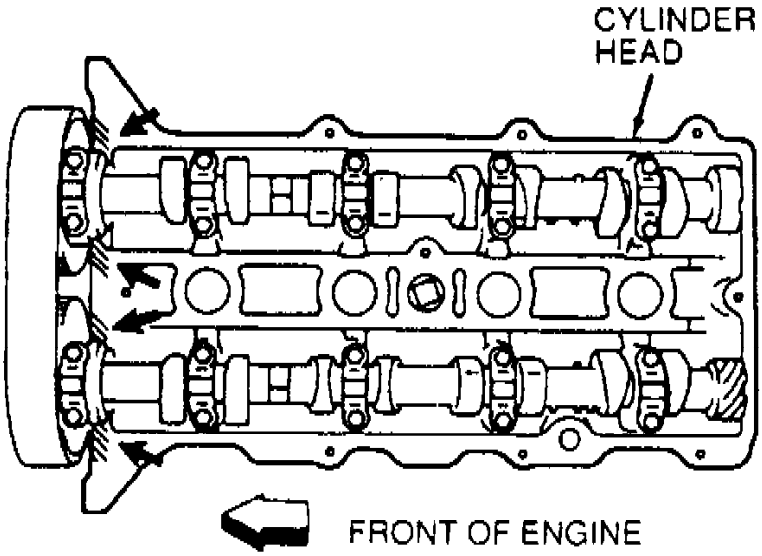

Fig. 13 Cylinder Head Sealant Application

   b. Apply silicone sealant to cylinder head as shown.

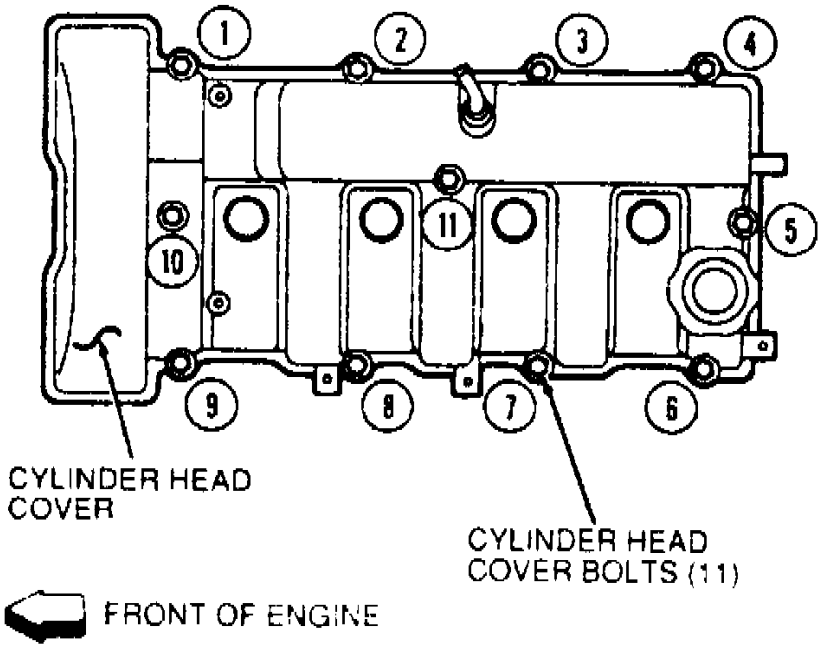

Fig. 14 Cylinder Head Cover Bolt Tightening Sequence

c. Tighten cylinder head cover bolts in sequence in two steps to **52-69 in lb**.

1993 Ford Probe L4-121 2.0L DOHC VIN A MFI

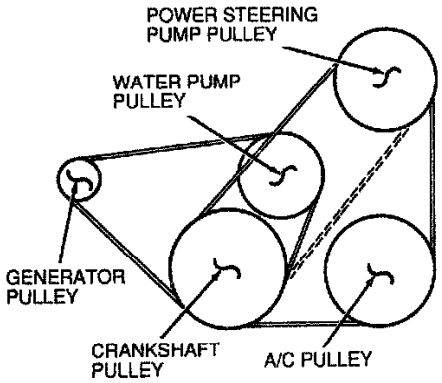

Engine Mount: Service and Repair

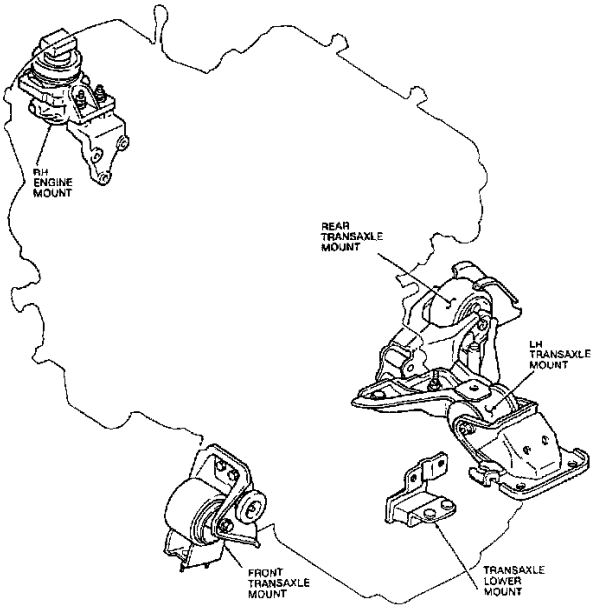

Engine Mount Locations

Refer to image when replacing engine mounts.

Oil Pressure Gauge: Description and Operation

The oil pressure indicating system is a magnetic type system, which consists of three primary coils, one of which is wound at a 90° angle to the other two. The coils form a magnetic field which varies in direction according to the variable resistance of the sender unit which is connected between two of them. A primary magnet, to which a shaft and pointer are attached, rotates to align to this primary field, resulting in pointer position. The bobbin/coil assembly is pressed into a metal housing which as two holes for dial mounting. The is no adjustment, calibration or maintenance required for these gauges.

SYMPTOM CHART

CONDITION	POSSIBLE SOURCE	ACTION
• Oil Pressure Gauge Does Not Work	• Fuse. • Circuit. • Oil pressure sender. • Oil pressure gauge.	• GO to OP1.
• Oil Pressure Gauge Not Reading Correct Pressure	• Oil pressure sender. • Circuit. • Oil pressure gauge.	• GO to OP8.
• Oil Pressure Gauge Always Reads Low	• Fuse. • Circuit. • Oil pressure sender. • Oil pressure gauge.	• GO to OP1.
• Oil Pressure Gauge Always Reads High	• Oil pressure sender. • Circuit. • Oil pressure gauge.	• GO to OP8.

Pinpoint Tests — Oil Pressure Gauge System

TEST STEP	RESULT ▶	ACTION TO TAKE
OP1 CHECK FUSE		
• Check the 15A METER fuse located in the interior fuse panel. • **Is the fuse OK?**	Yes ▶ No ▶	GO to OP4. GO to OP2.
OP2 CHECK SYSTEM		
• Key OFF. • Replace the 15A METER fuse. • Key ON. • Inspect the fuse. • **Does the fuse fail again?**	Yes ▶ No ▶	GO to OP3. GO to OP4.

Fig. 24 Gauge Type Oil Pressure Indicator Diagnosis

TEST STEP		RESULT	ACTION TO TAKE
OP3	CHECK FOR SHORT TO GROUND		
	• Key OFF. • Locate and disconnect the 14-pin interior fuse panel connector. • Remove the instrument cluster. • Locate and disconnect the 14-pin instrument cluster connector. • Measure the resistance of the "BK/Y" wire between the 14-pin interior fuse panel connector and ground. • **Is the resistance less than 5 ohms?**	Yes ▶ No ▶	SERVICE the "BK/Y" wire between the interior fuse panel and the instrument cluster. RECONNECT the interior fuse panel. GO to OP4.

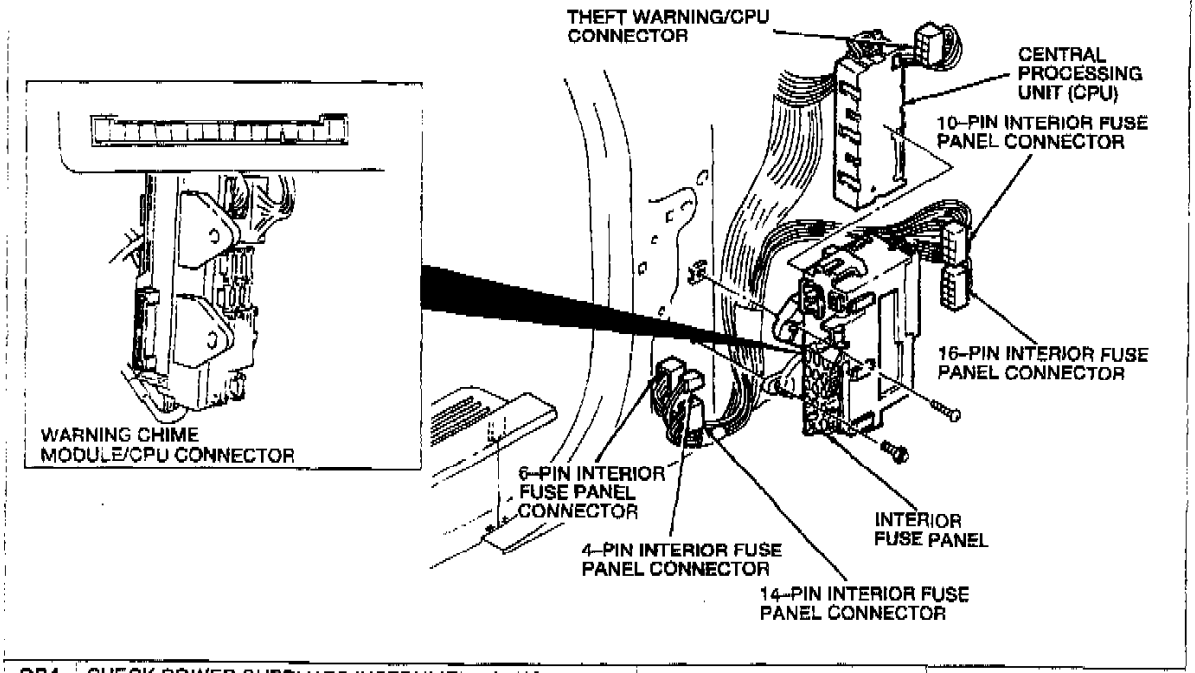

OP4	CHECK POWER SUPPLY TO INSTRUMENT CLUSTER		
	• Key OFF. • Remove the instrument cluster. • Disconnect the 14-pin instrument cluster connector. • Key ON. • Measure the voltage on the "BK/Y" wire at the 14-pin instrument cluster connector. • **Is the voltage greater than 10 volts?**	Yes ▶ No ▶	GO to OP5. SERVICE the "BK/Y" wire between the instrument cluster and the interior fuse panel.

Fig. 24 Gauge Type Oil Pressure Indicator Diagnosis

TEST STEP	RESULT	ACTION TO TAKE
OP5 CHECK POWER SUPPLY TO OIL PRESSURE GAUGE		
• Key OFF. • Disconnect and remove the instrument cluster. • Measure the resistance of the circuit between the instrument cluster pin 1F and the oil pressure gauge "+" screw terminal. 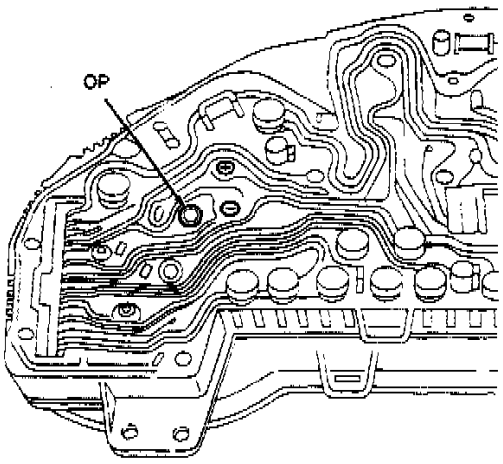 • **Is the resistance less than 5 ohms?**	Yes No	GO to OP6. REPLACE the instrument cluster printed circuit board.
OP6 CHECK INSTRUMENT CLUSTER GROUND		
• Key OFF. • Disconnect the 14-pin instrument cluster connector. • Measure the resistance of the "BK" wire between the 14-pin instrument cluster connector and ground. • **Is the resistance less than 5 ohms?**	Yes No	GO to OP7. SERVICE the "BK" wire.
OP7 CHECK GROUND TO OIL PRESSURE GAUGE		
• Key OFF. • Disconnect and remove the instrument cluster. • Measure the resistance of the circuit between the instrument cluster pin 1I and the oil pressure gauge "-" screw terminal. • **Is the resistance less than 5 ohms?**	Yes No	GO to OP8. REPLACE the instrument cluster printed circuit board.
OP8 CHECK SIGNAL FROM OIL PRESSURE SENDER		
• Key OFF. • Locate and disconnect the oil pressure sender connector. • Connect Rotunda Instrument Gauge System Tester 021-00055 or equivalent between the oil pressure sender connector and ground. • Key ON. • Adjust the instrument gauge system tester to the resistances shown. 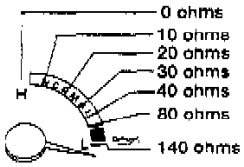 • **Is the oil pressure gauge working properly?**	Yes No	REPLACE the oil pressure sender. GO to OP9.

Fig. 24 Gauge Type Oil Pressure Indicator Diagnosis

	TEST STEP	RESULT	ACTION TO TAKE
OP9	CHECK WIRE BETWEEN INSTRUMENT CLUSTER AND OIL PRESSURE SENDER		
	• Key OFF. • Remove the instrument cluster. • Disconnect the 16-pin instrument cluster connector. • Disconnect the oil pressure sender connector. • Measure the resistance of the "P / Y" wire between the 16-pin instrument cluster connector and the oil pressure sender connector. • Measure the resistance of the "P / Y" wire between the 16-pin instrument cluster connector and ground. • **Is the resistance less than 5 ohms between the instrument cluster connector and the oil pressure sensor connector, and greater than 10,000 ohms between the instrument cluster and ground?**	Yes No	GO to OP10. SERVICE the "P / Y" wire.
OP10	CHECK INSTRUMENT CLUSTER CIRCUIT TO OIL PRESSURE GAUGE		
	• Key OFF. • Disconnect and remove the instrument cluster. • Measure the resistance of the circuit between the instrument cluster pin 2F and the oil pressure gauge "OP" screw terminal. • **Is the resistance less than 5 ohms?**	Yes No	REPLACE the oil pressure gauge. REPLACE the instrument cluster printed circuit board.

Fig. 24 Gauge Type Oil Pressure Indicator Diagnosis

Oil Pump: Service and Repair

1. Disconnect battery ground cable, then isolate cable end with electrical tape or equivalent.
2. Remove power steering pump belt shield, then loosen adjusting bolt.
3. Loosen lock bolt and power steering pump through bolt, then remove power steering belt.
4. Loosen alternator adjusting bolt, then loosen alternator upper mounting bolt and remove alternator belt.
5. Raise and support vehicle, then remove righthand splash shield.
6. Using crankshaft pulley holder tool T92C-6316-AH or equivalent, remove crankshaft pulley attaching bolt.
7. Remove crankshaft pulley, sprocket and guide plate.
8. Remove A/C compressor and position aside, then the compressor mounting bracket.
9. Remove oil pan.
10. Remove oil pickup tube and discard gasket.
11. Remove rear main seal housing to stiffener attaching bolts.

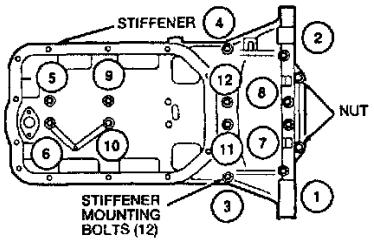

Fig. 22, Stiffener Bolt Loosening Sequence

12. Remove stiffener mounting bolts in two steps using sequence shown.
13. Remove seven oil pump attaching bolts, then the pump.
14. Reverse procedure to install, noting the following:

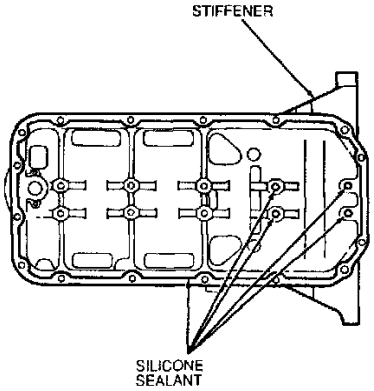

Fig. 23, Applying Sealant To Stiffener

a. Apply a bead of silicone sealer to pump as shown.

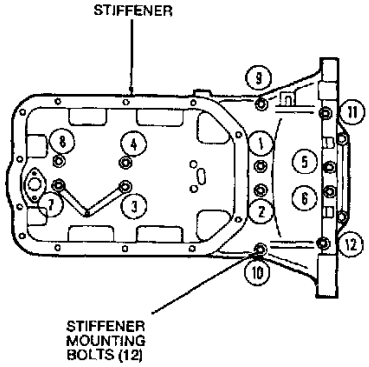

Fig. 24, Stiffener Bolt Tightening Sequence

b. Torque stiffener mounting bolts in sequence shown to **14-19 ft lb.**

Intake Manifold: Service and Repair

1. Disconnect battery ground cable, then isolate cable end with electrical tape or equivalent.
2. Remove air intake system and fuel line mounting bracket.
3. Disconnect throttle cable.
4. Disconnect coolant line from idle air bypass air valve.
5. Disconnect coolant and vacuum lines from throttle body. Mark vacuum lines for installation reference.
6. Disconnect throttle position sensor connector.
7. On models with automatic transaxle, disconnect idle switch connector.
8. Disconnect brake booster vacuum line from back lefthand side of intake manifold.
9. Disconnect EGR temperature sensor connector, if equipped.
10. Disconnect speed control vacuum line from back righthand side of intake manifold.
11. Disconnect EGR solenoid connectors.
12. Remove PCV valve from cylinder head cover.
13. Raise and support vehicle.
14. Remove intake manifold support bracket, then the EGR pipe from intake manifold.
15. Lower vehicle and remove intake manifold attaching bolts and nuts.
16. Remove intake manifold and discard gasket.

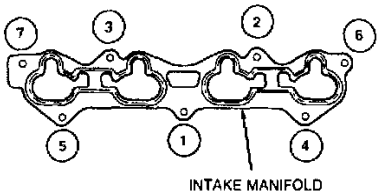

Intake Manifold Tightening Sequence

17. Reverse procedure to install. Torque bolts and nuts in sequence to **14-19 ft lb.**

Crankshaft Main Bearing Seal: Service and Repair

1. Remove transaxle.
2. Remove flywheel.
3. Remove rear main seal housing to stiffener attaching nuts.
4. Remove six rear main seal housing to block attaching bolts, then the seal housing from the block.
5. Using seal removal tool T92C-6700-CH or equivalent, remove seal from housing.

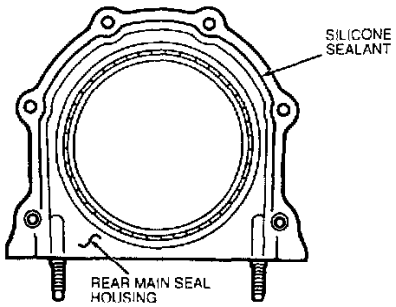

Fig. 20, Applying Sealant To Rear Main Seal Housing

6. Reverse procedure to install, applying a bead of silicone sealant to rear main seal housing as shown.

Timing Belt: Service and Repair

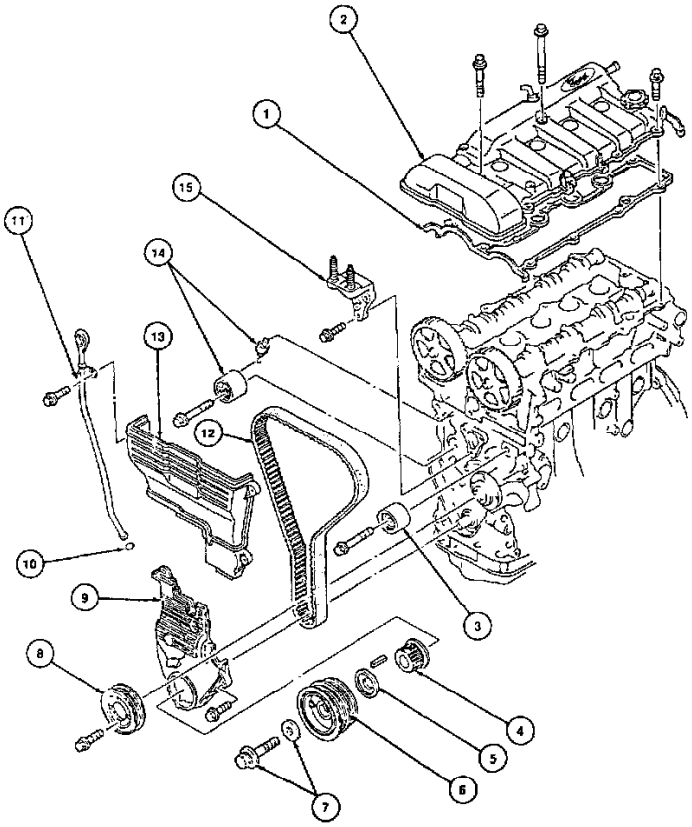

Item	Description
1	Cylinder Head Cover Gasket
2	Cylinder Head Cover
3	Idler
4	Crankshaft Sprocket
5	Guide Plate
6	Crankshaft Pulley

Item	Description
7	Crankshaft Pulley Bolt and Washer
8	Water Pump Pulley
9	Timing Belt Lower Cover
10	Engine Oil Dipstick O-Ring
11	Engine Oil Dipstick
12	Timing Belt
13	Timing Belt Upper Cover

Fig. 15, Timing Belt Assembly

1. Disconnect battery ground cable, then isolate cable end with electrical tape.
2. Remove cylinder head valve cover.
3. Remove power steering pump belt shield, then loosen adjusting bolt.
4. Loosen lock bolt and power steering pump through bolt, then remove power steering belt.
5. Loosen alternator adjusting bolt and alternator upper mounting bolt, then remove alternator belt.
6. Support engine using three bar engine support No. 014-00750 or equivalent.
7. Using suitable jack, raise engine slightly and remove righthand engine mount.
8. Remove timing belt upper cover.
9. Raise and support vehicle, then remove splash shields.
10. Using crankshaft pulley holder T92C-6316-AH or equivalent, remove crankshaft pulley attaching bolt.
11. Remove crankshaft pulley, sprocket and guide plate.
12. Remove timing belt lower cover bolts, then the cover.
13. Temporarily install crankshaft pulley attaching bolt.

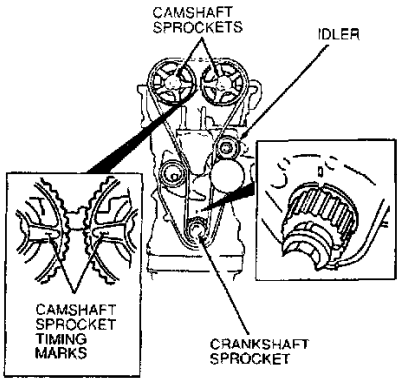

Fig. 16, Aligning Timing Marks

14. Turn crankshaft until timing mark on crankshaft sprocket lines up with timing mark on oil pump and camshaft sprocket timing marks (E and

I) line up as shown.

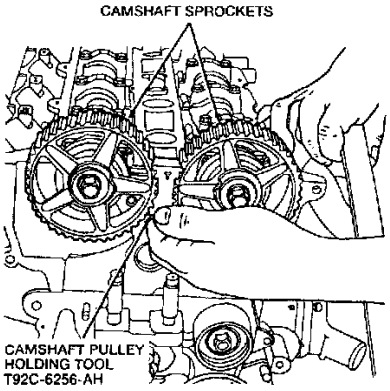

Fig. 17, Positioning Camshaft Pulley Holding Tool

15. Lower vehicle and insert camshaft pulley holding tool T92C-6256-AH or equivalent.
16. Use an allen wrench to turn timing belt tensioner and remove timing belt tensioner spring from hook pin.
17. Remove timing belt.

NOTE: If reusing old timing belt, mark direction of belt for installation reference.

18. Reverse procedure to install, ensuring all timing marks are aligned.

Timing Component Alignment Marks: Locations

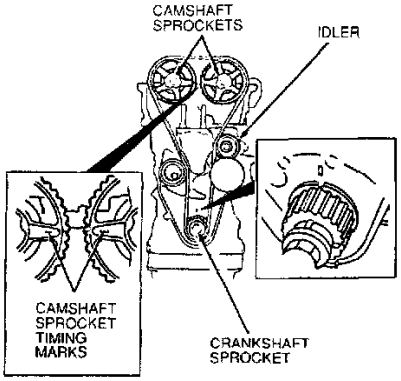

Fig. 16, Aligning Timing Marks

CAUTION: Incorrect removal or installation of the timing belt can result in damage to internal engine components.

For complete Timing Belt Removal and Installation information:See: Timing Belt/Service and Repair

Cooling System: Description and Operation

Voltage is present at the contacts of the High Speed Cooling Fan Relay at all times through the CO0LING FAN Fuse. With the Ignition Switch in "START" or "RUN", voltage is present at the coils of the Low Speed Cooling Fan Relay and the High Speed Cooling Fan Relay through the ENGINE Fuse. With the High Speed Cooling Fan Relay de-energized, voltage is also present at the contacts of the Low Speed Cooling Fan Relay.

When the Powertrain Control Module **(PCM)** determines that the engine coolant temperature is above 97°C (207°F), it grounds circuit 197 (BL/O) with 2.0L or 174 (R/W) with 2.5L to Low Speed Cooling Fan Relay. The Relay contacts close and power flows through the CO0LING FAN Fuse, High Speed Cooling Fan Relay (de-energized), Low Speed Cooling Fan Relay and the low speed winding of the Cooling Fan Motor to ground. The Fan runs at low speed.

The Fan will run at low speed until:

a. the Low Speed Cooling Fan Relay coil is no longer grounded and the Fan shuts off, or
b. engine coolant temperature reaches 108°C (226°F).

If the PCM senses coolant temperature above 108°C (226°F), it grounds the coil of the High Speed Cooling Fan Relay, energizing the Relay and switching current flow from the Low Speed Cooling Fan Relay contacts to the high speed winding of the Cooling Fan Motor; the Fan runs at high speed. On vehicles equipped with a 2.5L engine and air conditioning, the Condenser Fan Relay coil is grounded whenever the air conditioning system is activated, and the Cooling Fan Motor runs continuously at Hi speed.

TEST STEP		RESULT ▶	ACTION TO TAKE
B1	TEMPERATURE CHECK		
	• Operate engine at high rpm or under load for 20 minutes. Check coolant temperature with thermometer. **WARNING: USE CARE WHEN REMOVING RADIATOR CAP TO AVOID INJURY FROM ESCAPING STEAM OR HOT WATER.** NOTE: Remove radiator cap before running this test. Then use a known quality thermometer for checking coolant temperature. • Measure the temperature at top of radiator. Specifications are as follows: Gasoline engines — 91-121°C (195-250°F) Diesel Engines — 91-114°C (195-237°F) • Is coolant temperature within specifications?	Yes ▶ No ▶	GO to **B2**. GO to **B3**.
B2	GAUGES / LIGHTS		
	• Check operation of temperature gauge • Is gauge operating properly?	Yes ▶ No ▶	ADVISE customer of normal operation. REPAIR or REPLACE components as necessary.
B3	THERMOSTAT		
	• Remove and test thermostat. • Is thermostat operating properly?	Yes ▶ No ▶	ADVISE customers of normal operation. REPLACE the thermostat. GO to **B1**.

Cooling System Diagnosis (Engine Fails To Reach Operating Temperature)

Cooling System: Testing and Inspection
Engine Overheats

	TEST STEP	RESULT ▶	ACTION TO TAKE
C1	COOLANT		
	• Check coolant level. • Is coolant level within specifications?	Yes ▶ No ▶	GO to C2. REFER to Coolant Loss Diagnosis GO to C2.
C2	TEMPERATURE CHECK—(DOWN FLOW RADIATOR ONLY)		
	• Operate engine at high rpm or under load for 20 minutes. Check temperature with a thermometer. **CAUTION: Use care when removing radiator cap to avoid injury from escaping steam or hot water. If engine overheats, shut down immediately and GO to C4.** NOTE: Remove radiator cap before running this test.	Temperature is within specifications ▶ Temperature too low ▶ Temperature too high ▶	GO to C3. GO to Engine Fails to Reach Normal Operating Temperature GO to C4.
C3	TEMPERATURE GAUGE		
	• Check operation of temperature gauge. • Is temperature gauge operating properly?	Yes ▶ No ▶	ADVISE customer of normal operation. REPAIR or REPLACE components as necessary.

Cooling System Diagnosis (Engine Overheats)

	TEST STEP	RESULT ▶	ACTION TO TAKE
C4	FAN BELT		
	• Check fan belt tension. • Is fan belt tension within specifications?	Yes ▶ No ▶	GO to C5. REPLACE fan belt and/or ADJUST belt tension. GO to C2. Check automatic belt tensioner for proper operation.
C5	RADIATOR		
	• Check radiator and air conditioning condenser fins for obstructions.	No obstructions ▶ Obstructions present ▶	GO to C6. CLEAR radiator fins. GO to C2.
C6	SYSTEM CIRCULATION		
	• Remove radiator cap. Operate engine at high rpm. Coolant should not overflow radiator filler neck. • Does coolant overflow filler neck?	Yes ▶ No ▶	GO to C7. GO to C9.
C7	DISTRIBUTOR BASICS		
	• Check ignition initial timing and distributor advance. • Are ignition initial timing and distributor advance correct?	Yes ▶ No ▶	GO to C8. MAKE adjustments, repairs, and/or parts replacements as necessary. GO to C2.
C8	WATER PUMP		
	• Remove water pump and check for binding or sheared impeller shaft.	No binding or shearing ▶ Binding or shearing present ▶	REINSTALL water pump and ADVISE customer of normal operation. REPLACE water pump. GO to C2.
C9	THERMOSTAT		
	• Check thermostat operation. • Is thermostat operating properly?	Yes ▶ No ▶	GO to C10. REPLACE thermostat. GO to C2.
C10	COOLING SYSTEM		
	• Flush, clean and refill cooling system. Repeat test Step C2. • Is temperature within specifications?	Yes ▶ No ▶	ADVISE customer of normal operation. GO to C11.
C11	FAN CLUTCH		
	• Check automatic fan drive system operation. • Is fan drive system operating properly?	Yes ▶ No ▶	ADVISE customer of normal operation. REPLACE fan clutch and GO to C2.

Cooling System Diagnosis (Engine Overheats)

TEST STEP		RESULT ▶	ACTION TO TAKE
A1	VISUAL CHECK		
	• Make visual check for leaking hoses, and connections to radiator, heater core and engine. • Is everything operating properly?	Yes ▶ No ▶	GO to A2. Make necessary repairs. GO to A2.
A2	PRESSURE TEST		
	• Pressure test cooling system to check for dirty or damaged radiator cap, external leakage and / or internal leakage.	Cooling system Checks OK ▶ Dirty or damaged radiator cap ▶ External leak ▶ Internal leak ▶	RETURN vehicle to customer. CLEAN or REPLACE cap. REPEAT A2. REPAIR or REPLACE as necessary. REPEAT A2. DISASSEMBLE engine as necessary to determine cause of leakage. CHECK for: cracked intake manifold, blown head gasket, warped block or head gasket surfaces, cracked cylinder head(s), cracked cylinder block. REPAIR or REPLACE as necessary. REPEAT A2.

Cooling System Diagnosis (Loss Of Coolant)

Radiator Cooling Fan Motor: Description and Operation

The cooling fan incorporates a two-speed cooling electric motor which is mounted within the cooling shroud behind the radiator. The Cooling Fan Engine Coolant Temperature (ECTF) sensor measures coolant temperature and sends a signal to the PCM which will activate the cooling fan accordingly. The cooling fan motor can be activated to operate on low or high speed.

SYMPTOM CHART

CONDITION	POSSIBLE SOURCE	ACTION
• Cooling Fan Never Runs (May Cause Overheating)	• Fuses. • Circuit. • Cooling fan relays. • Cooling fan motor.	• GO to CLF1.
• Cooling Fan Runs Constantly	• Circuit. • Cooling fan relays. • Cooling fan motor. • Engine Coolant Temperature (ECT) sensor.	• GO to CLF5.
• No High Speed Cooling Fan Operation	• Circuit. • Cooling fan high relay. • Cooling fan motor.	• GO to CLF4.
• No Low Speed Cooling Fan Operation	• Circuit. • Cooling fan relays. • Cooling fan motor.	• GO to CLF4.

Fig. 35 Symptom Chart. 1993 Probe 2.0L Engine

Radiator Cooling Fan Motor: Pinpoint Tests

	TEST STEP	RESULT	ACTION TO TAKE
CLF1	CHECK FUSES • Key OFF. • Check the 15A ENGINE fuse located in the interior fuse panel and the 40A COOLING FAN fuse located in the main fuse panel. • **Are the fuses OK?**	Yes No	GO to CLF4. GO to CLF2.
CLF2	CHECK SYSTEM • Key OFF. • Replace the blown fuse(s). • Key ON. • **Do(es) the fuse(s) fail again?**	Yes No	GO to CLF3. GO to CLF4.
CLF3	CHECK FOR SHORT(S) TO GROUND • Key OFF. • Remove the 40A COOLING FAN fuse. • Locate and disconnect the 10-pin interior fuse panel connector. • Locate and disconnect the cooling fan low and high relay connectors. • Measure the resistance of the "BK/W" wire between the 10-pin interior fuse panel and ground. • Measure the resistance of the "BK/R" wire between the left terminal of the 40A COOLING FAN fuse holder in the main fuse panel and ground. • **Are the resistances less than 5 ohms?**	Yes No	SERVICE the wire(s) in question. REPLACE the 40A COOLING FAN fuse and/or the 15A ENGINE fuse. GO to CLF4.

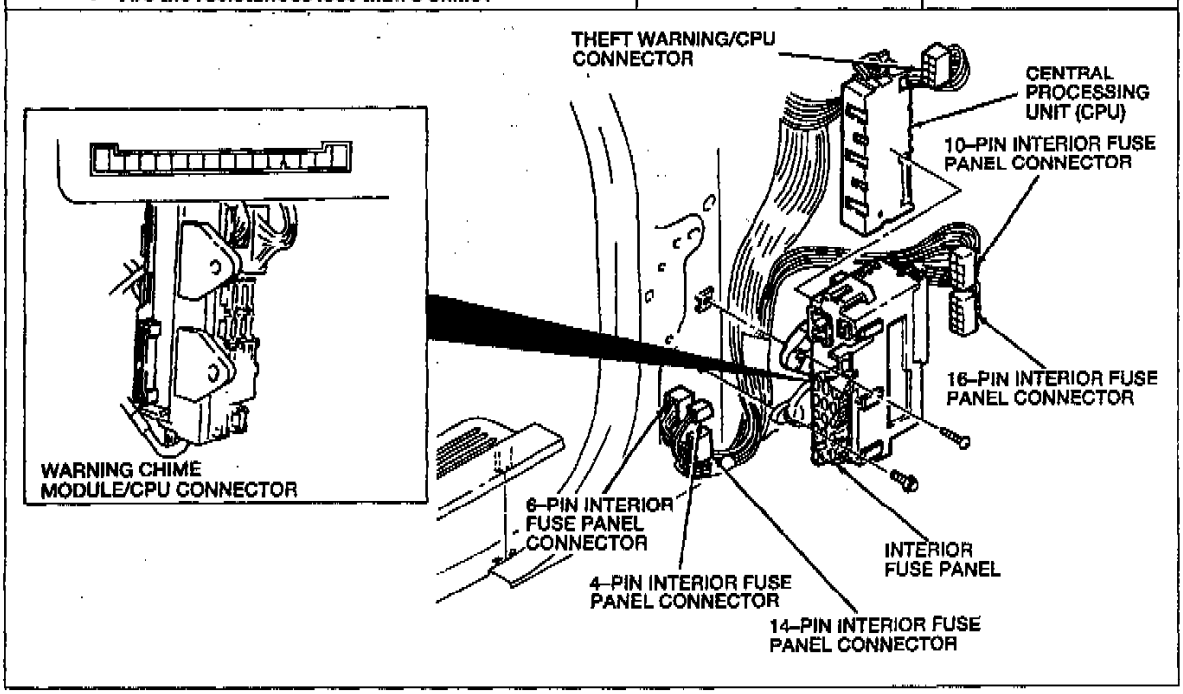

Fig. 35 Diagnostic Chart. (Part 1 Of 3). 1993 Probe 2.0L Engine

TEST STEP		RESULT	ACTION TO TAKE
CLF4	CHECK POWER SUPPLY		
	• Key OFF. • Locate and disconnect the cooling fan low relay connector and the cooling fan high relay connector. • Key ON. • Measure the voltage of the "BK/W" wire at the cooling fan low and high relay connectors. • Measure the voltage on the "BK/R" wire at the cooling fan high relay connector. • **Are the voltages greater than 10 volts?**	Yes ▶ No ▶	GO to CLF5. SERVICE the wire(s) in question.
CLF5	CHECK COOLING FAN HIGH RELAY		
	• Key OFF. • Disconnect the cooling fan high relay. • Apply 12 volts to the "BK/R" wire terminal and the "BK/W" wire terminal on the cooling fan high relay. • Measure the voltage of the "R" wire terminal on the cooling fan high relay. • Apply ground to the "BL/GN" wire terminal on the cooling fan high relay. • Measure the voltage of the "BL/BK" wire terminal on the cooling fan high relay. • **Is the voltage greater than 10 volts on the "R" wire terminal with the key OFF, and greater than 10 volts on the "BL/BK" wire terminal with the key ON and the "BL/GN" wire terminal grounded?**	Yes ▶ No ▶	GO to CLF6. REPLACE the cooling fan high relay.
CLF6	CHECK WIRE TO COOLING FAN MOTOR		
	• Key OFF. • Disconnect the cooling fan high relay connector. • Locate and disconnect the cooling fan motor connector. • Measure the resistance of the "BL/BK" wire between the cooling fan high relay connector and the cooling fan motor connector. • Measure the resistance of the "BL/BK" wire between the cooling fan high relay connector and ground. • **Is the resistance less than 5 ohms between the cooling fan high relay connector and the cooling fan motor connector, and greater than 10,000 ohms between the cooling fan high relay connector and ground?**	Yes (Cooling fan never runs) ▶ Yes (No high speed cooling fan operation) ▶ Yes (No low speed cooling fan operation or cooling fan runs constantly) ▶ No ▶	GO to CLF10. REPLACE the cooling fan motor. GO to CLF7. SERVICE the wire in question.
CLF7	CHECK WIRE BETWEEN COOLING FAN HIGH AND LOW RELAY		
	• Key OFF. • Disconnect the cooling fan low relay connector. • Measure the voltage of the "R" wire at the cooling fan low relay connector. • **Is the voltage greater than 10 volts?**	Yes ▶ No ▶	GO to CLF8. SERVICE the "R" wire.
CLF8	CHECK COOLING FAN LOW RELAY		
	• Key OFF. • Disconnect the cooling fan low relay. • Apply 12 volts to the "BK/W" wire terminal and the "R" terminal on the cooling fan low relay. • Measure the voltage of the "BL/Y" wire terminal on the cooling fan low relay. • Apply ground to the "BL/O" wire terminal on the cooling fan low relay. • Measure the voltage of the "BL/Y" wire terminal on the cooling fan low relay. • **Is the voltage less than 1 volt with the key OFF, and greater than 10 volts with the key ON and the relay grounded?**	Yes ▶ No ▶	GO to CLF9. REPLACE the cooling fan low relay.

Fig. 36 Diagnostic Chart. (Part 2 Of 3). 1993 Probe 2.0L Engine

	TEST STEP	RESULT ▶	ACTION TO TAKE
CLF9	CHECK WIRE BETWEEN COOLING FAN LOW RELAY AND COOLING FAN MOTOR		
	• Key OFF. • Disconnect the cooling fan low relay connector and the cooling fan motor connector. • Measure the resistance of the "BL/Y" wire between the cooling fan low relay connector and the cooling fan motor connector. • Measure the resistance of the "BL/Y" wire between the cooling fan low relay connector and ground. • **Is the resistance less than 5 ohms between the cooling fan low relay connector and the cooling fan motor connector, and greater than 10,000 ohms between the cooling fan low relay connector and ground?**	Yes ▶ No ▶	GO to CLF10. SERVICE the wire in question.
CLF10	CHECK COOLING FAN MOTOR GROUND		
	• Key OFF. • Disconnect the cooling fan motor connector. • Measure the resistance of the "BK" wire (harness side) between the cooling fan motor connector and ground. • **Is the resistance less than 5 ohms?**	Yes ▶ No ▶	REPLACE the cooling fan motor. SERVICE the "BK" wire.

Fig. 36 Diagnostic Chart. (Part 3 Of 3). 1993 Probe 2.0L Engine

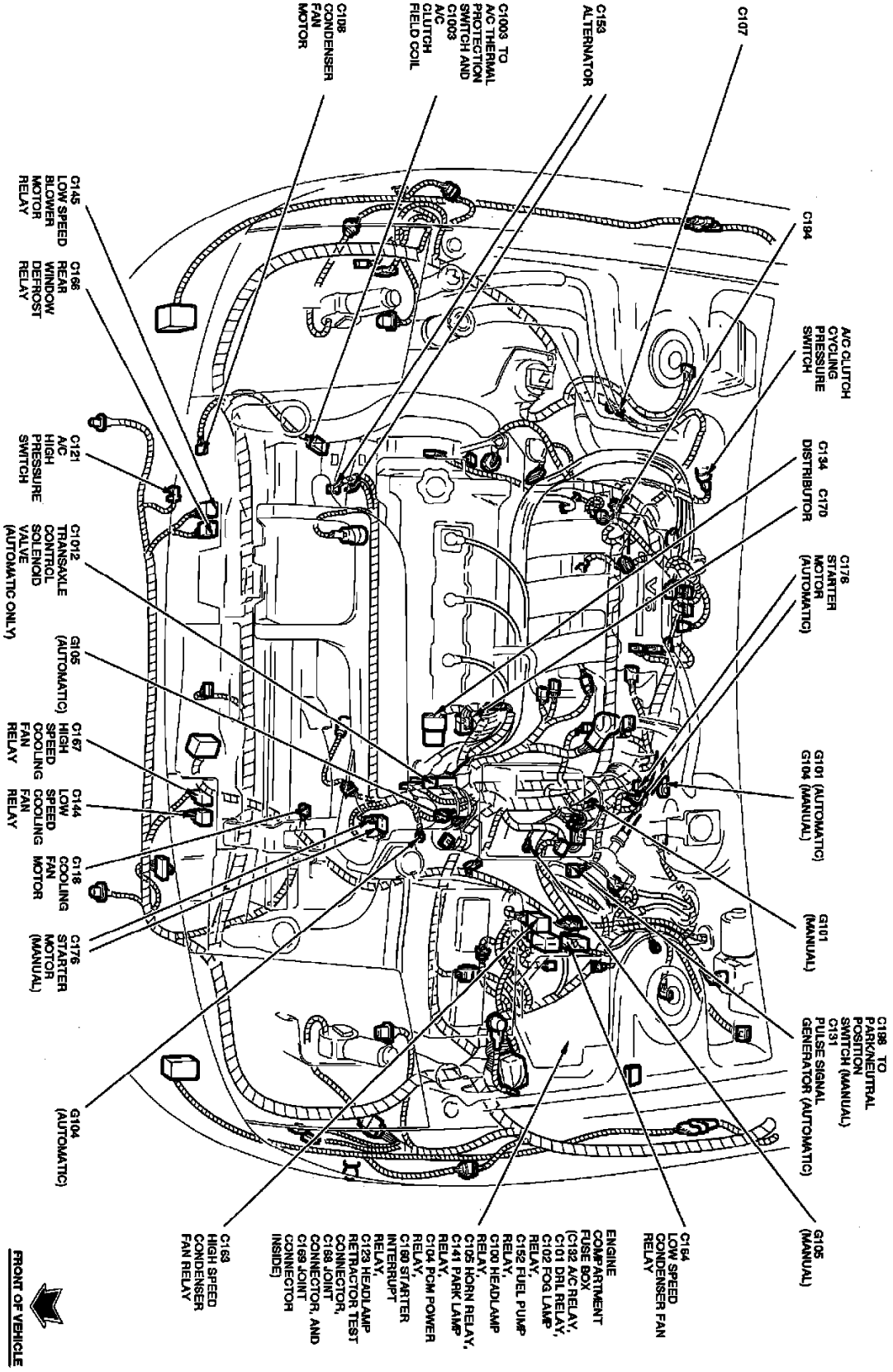

Component Locations

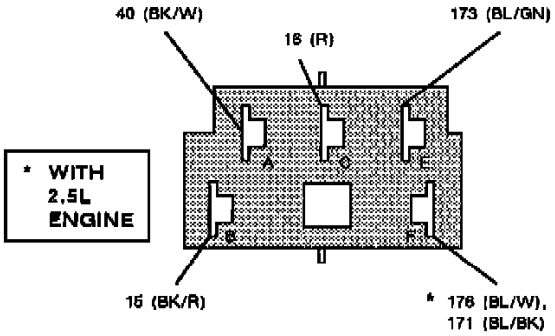

C144
HIGH SPEED COOLING FAN RELAY

High Speed Cooling Fan Relay

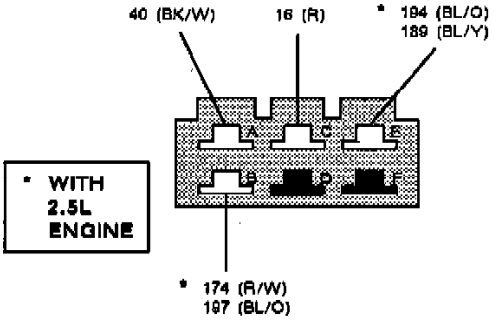

C167
LOW SPEED COOLING FAN RELAY

Low Speed Cooling Fan Relay

Coolant Temperature Sensor/Switch (For Computer): Description and Operation With Automatic Transmission

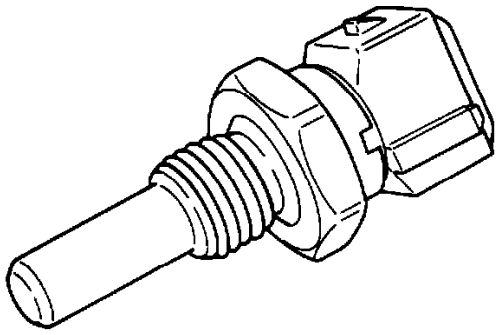

Engine Coolant Temperature (ECT) Sensor

The Engine Coolant Temperature (ECT) sensor constantly supplies the PCM with a signal reflecting engine coolant temperature. PCM reads varying sensor resistance and determines engine operating temperature. This information optimizes the air/fuel mixture, EGR flow, idle speed, fuel pressure, purge flow and ignition timing. This is a negative temperature coefficient sensor; as temperature increases, resistance decreases.

Coolant Temperature Sensor/Switch (For Computer): Description and Operation With Manual Transmission

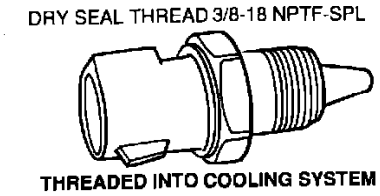

Engine Coolant Temperature (ECT) Sensor

PURPOSE

The Engine Coolant Temperature (**ECT**) sensor provides an input to the Powertrain Control Module (**PCM**). The PCM uses engine coolant temperature data to adjust the fuel injection base pulse width, EGR flow, and ignition timing.

CONSTRUCTION

The ECT is a two lead thermistor type sensor with a negative temperature coefficient.

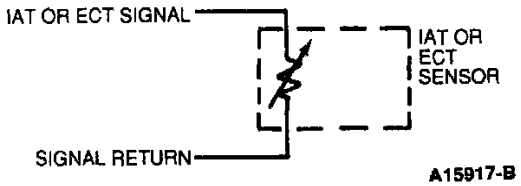

Descriptive Schematic

OPERATION

The PCM applies a 5.0 volt reference voltage to the ECT signal lead while the signal return lead is connected to a common sensor ground.

As the temperature of the engine coolant increases the resistance of the IAT decreases and correspondingly the voltage drop across the IAT decreases.

A decrease in engine coolant temperature coolant will increase the resistance of the IAT and raise the voltage drop across the sensor.

The normal operating range of the ECT is 3.50 volts (50°F) to 0.35 volts (230°F).

Due to it's negative temperature coefficient, poor electrical connections or minor increases in resistance across the ECT circuit harness and ground connections can result in temperature values that are lower than actual.

RELATED DIAGNOSTIC TROUBLE CODES

DTC 21/116 - The ECT sensor output is out of self-test range, 0.3-3.7 volts.

DTC 61/117 - The ECT sensor output is less than the self-test minimum, 0.2 volts.

DTC 51/118 - The ECT sensor output is greater than the self-test maximum, 4.6 volts.

Coolant Temperature Sensor/Switch (For Computer): Service and Repair

REMOVAL

1. Drain the radiator (8005) to a level below the water outlet connection and then close the radiator drain cock (8115).
2. Disconnect the battery ground cable.
3. Disconnect the Engine Coolant Temperature **(ECT)** sensor electrical connector.
4. Use a deep well socket to remove the ECT sensor from the water outlet connection. Discard the washer.

INSTALLATION

1. To install, reverse the removal procedure using a new washer.
2. Tighten the ECT sensor to **16-24 Nm (12-18 ft lb).**
3. Fill the cooling system.

NOTE: When the battery has been disconnected and reconnected, some abnormal drive symptoms may occur while the powertrain control module relearns its adaptive strategy. The vehicle may need to be driven 10 miles or more to relearn the adaptive strategy.

Temperature Sensor (Gauge): Pinpoint Tests

SYMPTOM CHART

CONDITION	POSSIBLE SOURCE	ACTION
• Temperature Gauge Does Not Work	• Fuse. • Circuit. • Gauge engine coolant temperature sender. • Temperature gauge.	• GO to TG1.
• Temperature Gauge Not Reading Correctly	• Gauge engine coolant temperature sender. • Circuit. • Temperature gauge.	• GO to TG8.
• Temperature Gauge Always Reads Cold	• Fuse. • Circuit. • Gauge engine coolant temperature sender. • Temperature gauge.	• GO to TG1.
• Temperature Gauge Always Read Hot	• Gauge engine coolant temperature sender. • Circuit. • Temperature gauge.	• GO to TG8.

Pinpoint Tests — Temperature Gauge System

TEST STEP		RESULT	ACTION TO TAKE
TG1	CHECK FUSE		
	• Check the 15A METER fuse located in the interior fuse panel. • **Is the fuse OK?**	Yes No	GO to TG4. GO to TG2.
TG2	CHECK SYSTEM		
	• Key OFF. • Replace the 15A METER fuse. • Key ON. • Inspect the fuse. • **Does the fuse fail again?**	Yes No	GO to TG3. GO to TG4.

Fig. 16 Temperature Indicating System Diagnosis (Part 1 Of 4).

TEST STEP	RESULT	ACTION TO TAKE
TG3 CHECK FOR SHORT TO GROUND		
• Key OFF. • Locate and disconnect the 14-pin interior fuse panel connector. • Remove the instrument cluster. • Locate and disconnect the 14-pin instrument cluster connector. • Measure the resistance of the "BK/Y" wire between the 14-pin interior fuse panel connector and ground. • **Is the resistance less than 5 ohms?**	Yes No	SERVICE the "BK/Y" wire between the interior fuse panel and the instrument cluster. RECONNECT the interior fuse panel. GO to TG4.

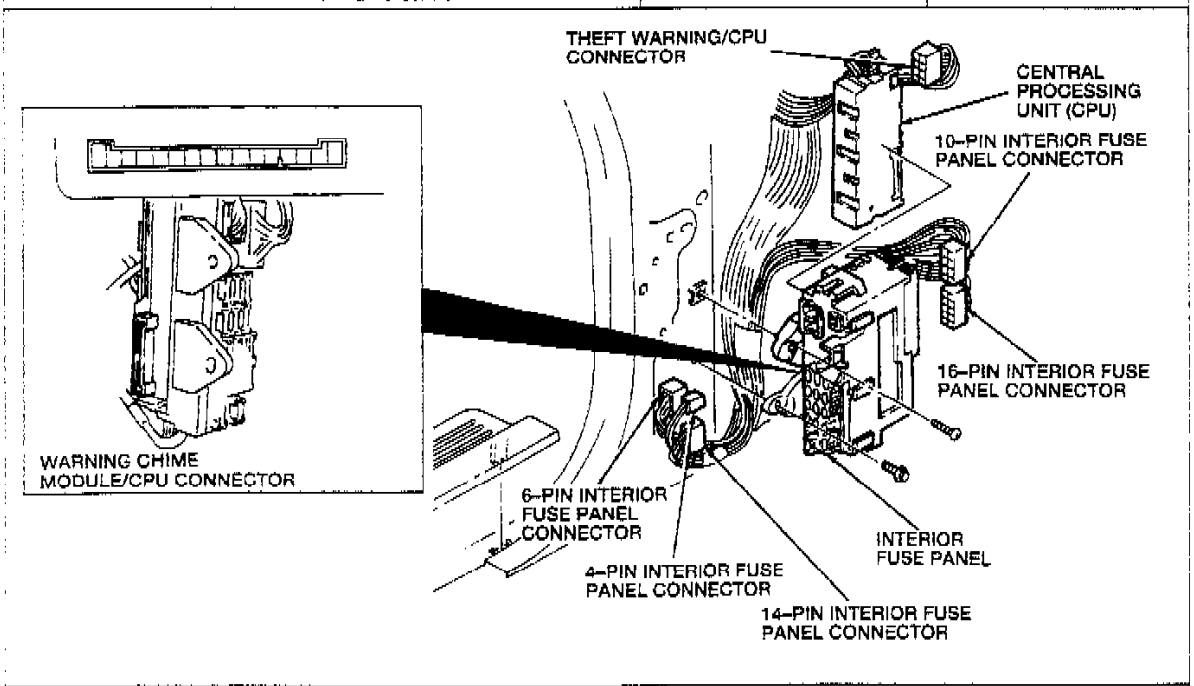

TG4 CHECK POWER SUPPLY TO INSTRUMENT CLUSTER		
• Key OFF. • Remove the instrument cluster. • Disconnect the 14-pin instrument cluster connector. • Key ON. • Measure the voltage on the "BK/Y" wire at the 14-pin instrument cluster connector. • **Is the voltage greater than 10 volts?**	Yes No	GO to TG5. SERVICE the "BK/Y" wire between the instrument cluster and the interior fuse panel.

Fig. 16 Temperature Indicating System Diagnosis (Part 2 Of 4).

TEST STEP	RESULT	ACTION TO TAKE
TG5 CHECK POWER SUPPLY TO TEMPERATURE GAUGE		
• Key OFF. • Disconnect and remove the instrument cluster. • Measure the resistance of the circuit between the instrument cluster pin 1F and the temperature gauge "+" screw terminal. 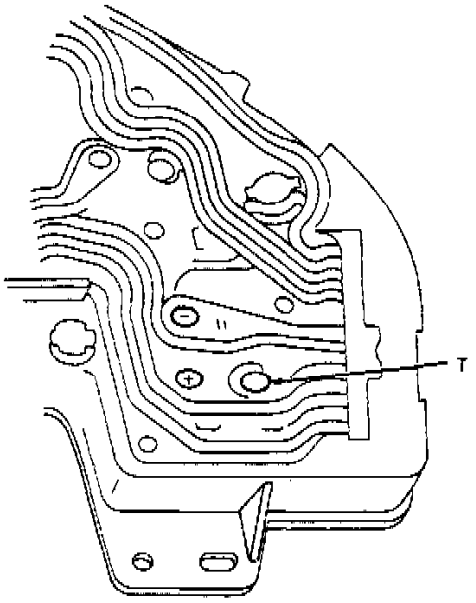 • **Is the resistance less than 5 ohms?**	Yes No	GO to TG6. REPLACE the instrument cluster printed circuit board.
TG6 CHECK INSTRUMENT CLUSTER GROUND		
• Key OFF. • Disconnect the 14-pin instrument cluster connector. • Measure the resistance of the "BK" wire between the 14-pin instrument cluster connector and ground. • **Is the resistance less than 5 ohms?**	Yes No	GO to TG7. SERVICE the "BK" wire.
TG7 CHECK GROUND TO TEMPERATURE GAUGE		
• Key OFF. • Disconnect and remove the instrument cluster. • Measure the resistance of the circuit between the instrument cluster pin 1I and the temperature gauge "-" screw terminal. • **Is the resistance less than 5 ohms?**	Yes No	GO to TG8. REPLACE the instrument cluster printed circuit board.

Fig. 16 Temperature Indicating System Diagnosis (Part 3 Of 4).

TEST STEP		RESULT	ACTION TO TAKE
TG8	CHECK SIGNAL FROM GAUGE ENGINE COOLANT TEMPERATURE SENDER		
	• Key OFF. • Locate and disconnect the gauge engine coolant temperature sender connector. • Connect Rotunda Instrument Gauge System Tester 021-00055 or equivalent between the gauge engine coolant temperature sender connector and ground. • Key ON. • Adjust the instrument gauge system tester to the resistances shown. 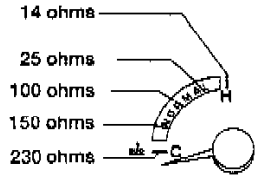 Temperature Gauge • **Is the temperature gauge working properly?**	Yes No	REPLACE the gauge engine coolant temperature sender. GO to TG9.
TG9	CHECK WIRE BETWEEN INSTRUMENT CLUSTER AND GAUGE ENGINE COOLANT TEMPERATURE SENDER		
	• Key OFF. • Disconnect the 16-pin instrument cluster connector. • Disconnect the gauge engine coolant temperature sender connector. • Measure the resistance of the "BK/BL" wire between the 16-pin instrument cluster connector and the gauge engine coolant temperature sender connector. • Measure the resistance of the "BK/BL" wire between the 16-pin instrument cluster and ground. • **Is the resistance less than 5 ohms between the instrument cluster connector and the gauge engine coolant temperature sender connector, and greater than 10,000 ohms between the instrument cluster and ground?**	Yes No	GO to TG10. SERVICE the "BK/BL" wire.
TG10	CHECK INSTRUMENT CLUSTER CIRCUIT TO TEMPERATURE GAUGE		
	• Key OFF. • Disconnect and remove the instrument cluster. • Measure the resistance of the circuit between the instrument cluster pin 1E and the temperature gauge "T" screw terminal. • **Is the resistance less than 5 ohms?**	Yes No	REPLACE the temperature gauge. REPLACE the instrument cluster printed circuit board.

Fig. 16 Temperature Indicating System Diagnosis (Part 4 Of 4).

Temperature Gauge: Description and Operation

The temperature indicating system is a magnetic type system, which consists only of the sending unit located in the engine block or cylinder head and a temperature gauge in the instrument cluster. The sending unit changes resistance according to the temperature of engine coolant, which varies the current flow through the gauge. The pointer position varies proportionally to the current flow. The sender resistance is high when coolant temperature is low, and low when coolant temperature is high.

The pointer of the magnetic gauge remains in position when ignition is turned to the Off position. It will move to the correct indication whenever the ignition is turned back to On position.

Temperature Gauge: Testing and Inspection
System Diagnosis

SYMPTOM CHART

CONDITION	POSSIBLE SOURCE	ACTION
• Temperature Gauge Does Not Work	• Fuse. • Circuit. • Gauge engine coolant temperature sender. • Temperature gauge.	• GO to TG1.
• Temperature Gauge Not Reading Correctly	• Gauge engine coolant temperature sender. • Circuit. • Temperature gauge.	• GO to TG8.
• Temperature Gauge Always Reads Cold	• Fuse. • Circuit. • Gauge engine coolant temperature sender. • Temperature gauge.	• GO to TG1.
• Temperature Gauge Always Read Hot	• Gauge engine coolant temperature sender. • Circuit. • Temperature gauge.	• GO to TG8.

Pinpoint Tests — Temperature Gauge System

TEST STEP		RESULT ▶	ACTION TO TAKE
TG1	CHECK FUSE		
	• Check the 15A METER fuse located in the interior fuse panel. • **Is the fuse OK?**	Yes ▶ No ▶	GO to TG4. GO to TG2.
TG2	CHECK SYSTEM		
	• Key OFF. • Replace the 15A METER fuse. • Key ON. • Inspect the fuse. • **Does the fuse fail again?**	Yes ▶ No ▶	GO to TG3. GO to TG4.

Fig. 16 Temperature Indicating System Diagnosis (Part 1 Of 4).

TEST STEP	RESULT	ACTION TO TAKE
TG3 CHECK FOR SHORT TO GROUND		
• Key OFF. • Locate and disconnect the 14-pin interior fuse panel connector. • Remove the instrument cluster. • Locate and disconnect the 14-pin instrument cluster connector. • Measure the resistance of the "BK/Y" wire between the 14-pin interior fuse panel connector and ground. • **Is the resistance less than 5 ohms?**	Yes No	SERVICE the "BK/Y" wire between the interior fuse panel and the instrument cluster. RECONNECT the interior fuse panel. GO to TG4.

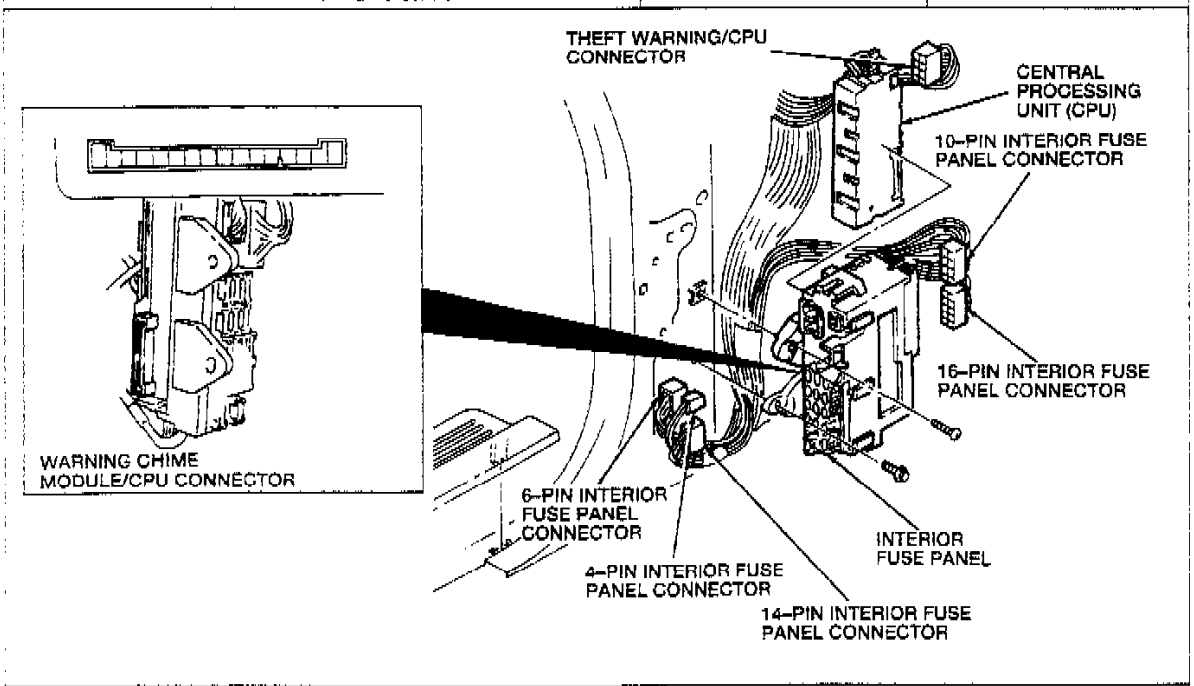

TG4 CHECK POWER SUPPLY TO INSTRUMENT CLUSTER		
• Key OFF. • Remove the instrument cluster. • Disconnect the 14-pin instrument cluster connector. • Key ON. • Measure the voltage on the "BK/Y" wire at the 14-pin instrument cluster connector. • **Is the voltage greater than 10 volts?**	Yes No	GO to TG5. SERVICE the "BK/Y" wire between the instrument cluster and the interior fuse panel.

Fig. 16 Temperature Indicating System Diagnosis (Part 2 Of 4).

TEST STEP	RESULT	ACTION TO TAKE
TG5 CHECK POWER SUPPLY TO TEMPERATURE GAUGE		
• Key OFF. • Disconnect and remove the instrument cluster. • Measure the resistance of the circuit between the instrument cluster pin 1F and the temperature gauge "+" screw terminal. 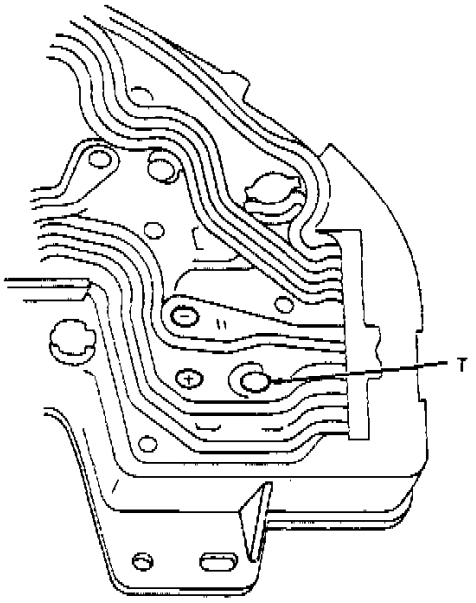 • **Is the resistance less than 5 ohms?**	Yes No	GO to TG6. REPLACE the instrument cluster printed circuit board.
TG6 CHECK INSTRUMENT CLUSTER GROUND		
• Key OFF. • Disconnect the 14-pin instrument cluster connector. • Measure the resistance of the "BK" wire between the 14-pin instrument cluster connector and ground. • **Is the resistance less than 5 ohms?**	Yes No	GO to TG7. SERVICE the "BK" wire.
TG7 CHECK GROUND TO TEMPERATURE GAUGE		
• Key OFF. • Disconnect and remove the instrument cluster. • Measure the resistance of the circuit between the instrument cluster pin 1I and the temperature gauge "-" screw terminal. • **Is the resistance less than 5 ohms?**	Yes No	GO to TG8. REPLACE the instrument cluster printed circuit board.

Fig. 16 Temperature Indicating System Diagnosis (Part 3 Of 4).

TEST STEP		RESULT	ACTION TO TAKE
TG8	CHECK SIGNAL FROM GAUGE ENGINE COOLANT TEMPERATURE SENDER		
	• Key OFF. • Locate and disconnect the gauge engine coolant temperature sender connector. • Connect Rotunda Instrument Gauge System Tester 021-00055 or equivalent between the gauge engine coolant temperature sender connector and ground. • Key ON. • Adjust the instrument gauge system tester to the resistances shown. 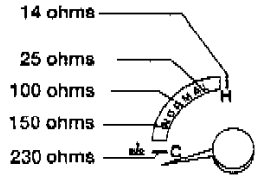 Temperature Gauge • **Is the temperature gauge working properly?**	Yes No	REPLACE the gauge engine coolant temperature sender. GO to TG9.
TG9	CHECK WIRE BETWEEN INSTRUMENT CLUSTER AND GAUGE ENGINE COOLANT TEMPERATURE SENDER		
	• Key OFF. • Disconnect the 16-pin instrument cluster connector. • Disconnect the gauge engine coolant temperature sender connector. • Measure the resistance of the "BK/BL" wire between the 16-pin instrument cluster connector and the gauge engine coolant temperature sender connector. • Measure the resistance of the "BK/BL" wire between the 16-pin instrument cluster and ground. • **Is the resistance less than 5 ohms between the instrument cluster connector and the gauge engine coolant temperature sender connector, and greater than 10,000 ohms between the instrument cluster and ground?**	Yes No	GO to TG10. SERVICE the "BK/BL" wire.
TG10	CHECK INSTRUMENT CLUSTER CIRCUIT TO TEMPERATURE GAUGE		
	• Key OFF. • Disconnect and remove the instrument cluster. • Measure the resistance of the circuit between the instrument cluster pin 1E and the temperature gauge "T" screw terminal. • **Is the resistance less than 5 ohms?**	Yes No	REPLACE the temperature gauge. REPLACE the instrument cluster printed circuit board.

Fig. 16 Temperature Indicating System Diagnosis (Part 4 Of 4).

Thermostat: Service and Repair

1. Disconnect battery ground cable, then isolate cable end with electrical tape.

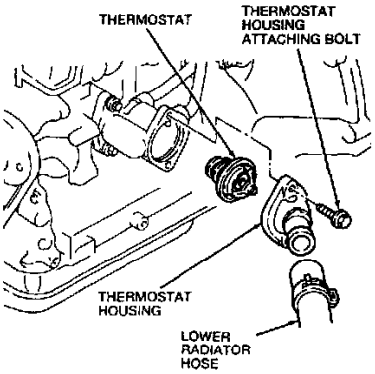

Fig. 26, Thermostat Replacement

2. Drain cooling system, then remove lower radiator hose from thermostat housing.
3. Remove two thermostat housing attaching bolts, then the housing.
4. Remove thermostat from housing.
5. Reverse procedure to install. Tighten to **14-19 ft lb.**

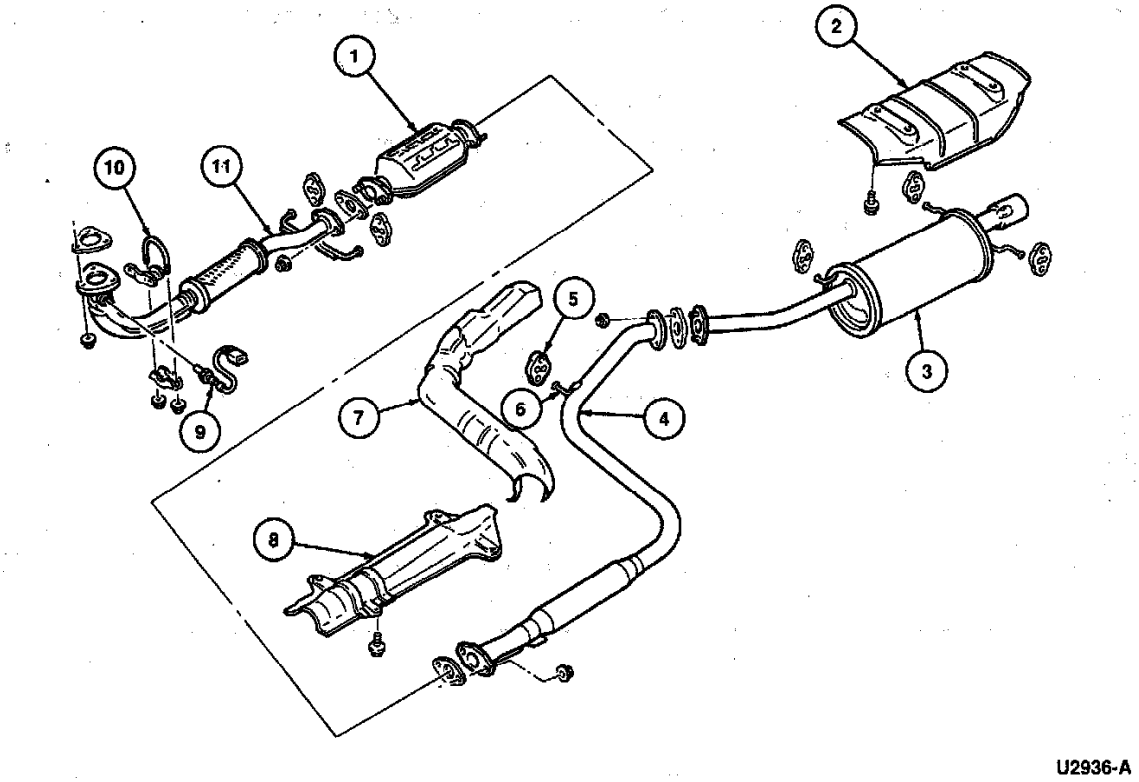

Item	Part Number	Description
1	5E212	Three-Way Catalytic Converter
2	112B28	Rear Floor Heat Deflector
3	5230	Muffler
4	5A289	Muffler Inlet Pipe and Resonator
5	5F262	Exhaust Hanger Insulator

Item	Part Number	Description
6	5277	Muffler Pipe Bracket
7	9A032	Fuel Tank Heat Shield
8	11166	Front Floor Pan Center Sound Insulator
9	9F472	Heated Oxygen Sensor
10	—	Exhaust Clamp
11	5246	Exhaust Inlet Pipe

Catalyst & Exhaust System

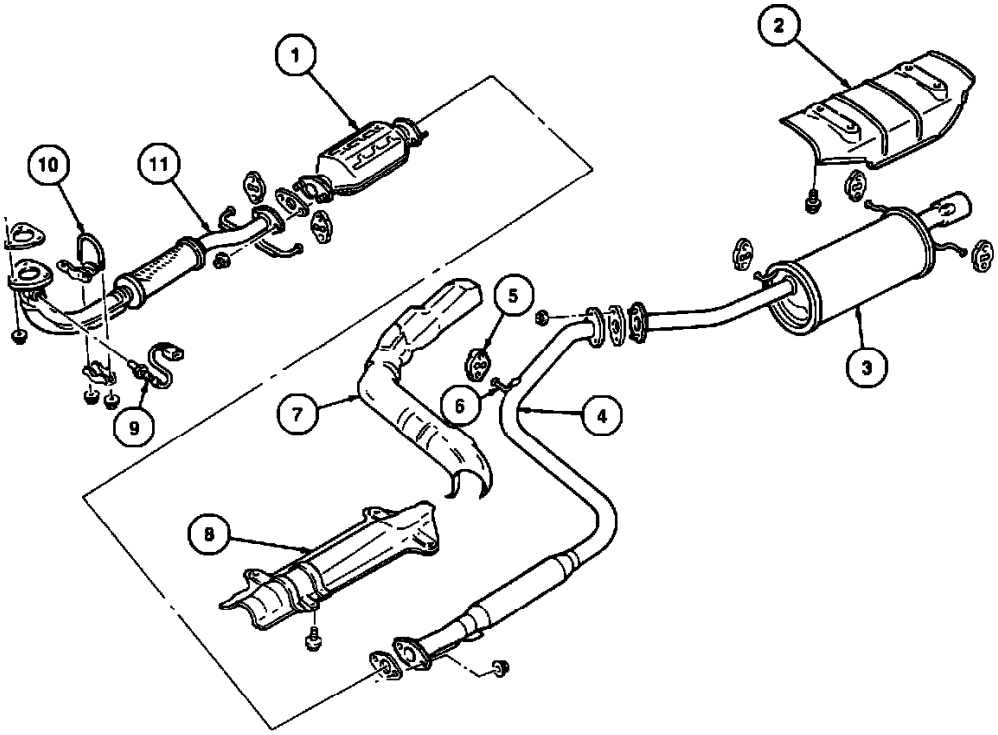

Item	Part Number	Description
1	5E212	Three-Way Catalytic Converter
2	112B28	Rear Floor Heat Deflector
3	5230	Muffler
4	5A289	Muffler Inlet Pipe and Resonator
5	5F262	Exhaust Hanger Insulator

Item	Part Number	Description
6	5277	Muffler Pipe Bracket
7	9A032	Fuel Tank Heat Shield
8	11166	Front Floor Pan Center Sound Insulator
9	9F472	Heated Oxygen Sensor
10	—	Exhaust Clamp
11	5246	Exhaust Inlet Pipe

Component Location

Catalytic Converter: Description and Operation

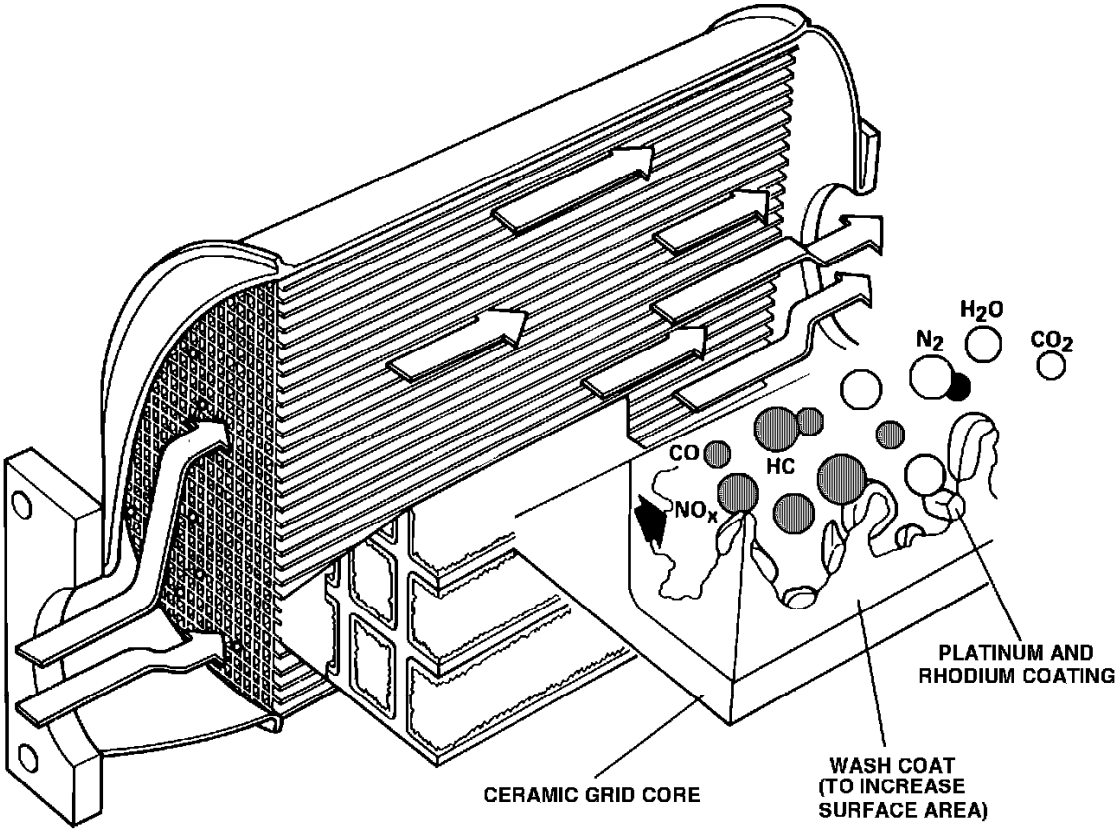

Three Way Catalyst (TWC)

PURPOSE

Three-way catalytic converters simultaneously remove up to 90% of all three major emissions (HC, CO, and NOx). Complete catalytic reactions depend on fuel mixture staying within a narrow range (14.7:1 ± 1%). This is achieved with a properly functioning oxygen sensor system.

CONSTRUCTION

Catalytic converters consist of a metal housing, a ceramic grid substrate, and a catalytic coating of platinum and rhodium. Active metal content is about 2 grams of platinum/rhodium.

OPERATION

As exhaust gas containing HC and CO passes through the converter, the platinum catalyst starts an oxidation (burning) process. HC and CO then unite with oxygen to form water vapor and carbon dioxide. This oxidation process has no effect on NOx emissions.

To reduce NOx, a separate reduction reaction is necessary. A reduction reaction is the removal of oxygen from a material. In three-way converters, rhodium is used as a catalyst to break down NOx into nitrogen and oxygen. The effective conversion of pollutants begins at about 250°C (480°F).

OPERATING ENVIRONMENT

Ideal operating temperature for maximum conversion and long service life is 750°F - 1500°F (400°C - 800°C). Engine malfunctions (misfires, etc.) can cause converter temperature to rise above 2500°F (1400°C). Such temperatures can lead to converter destruction by melting the substrate material.

CAUTION: DO NOT use leaded fuel except in emergencies. It will permanently render the converter ineffective. Lead compounds deposited in the pores and on the surface of the active material reduce or eliminate exposure to exhaust gasses. Excessive engine oil residues can also ruin the catalyst.

Catalytic Converter: Initial Inspection and Diagnostic Overview

1. Visually inspect catalyst and exhaust system components and related controls that may affect exhaust gas quality or cause backfire or loss of power. Check for:

   ^ Misrouted, damaged wiring.
   ^ Damaged coil, distributor, or spark plugs.
   ^ Corroded, loose connectors.
   ^ Leaking fuel injectors.
   ^ Damaged air inlet passages.
   ^ Inoperative EGR valve.
   ^ Exhaust pipe pinched, crushed.
   ^ Damaged, loose vacuum hoses.
   ^ Incorrect idle speed.
   ^ Dirty air filter.
   ^ Damaged catalytic converter.

2. Exercise wiring and connectors for solenoids and other components for obvious problems due to looseness, corrosion, or other damage. Do this when the engine is fully warmed up.
3. Check vacuum lines and connections for looseness, pinching, leakage, splitting, blockage, or other damage that may cause malfunction.
4. If a vacuum line or orifice (restrictor) blockage is suspected as the cause of a malfunction, make corrections before proceeding to the next step.
5. Check engine oil for fuel dilution.
6. If all checks are OK, proceed to Pinpoint Tests.
7. If the symptom is "Fails Emission Test," proceed to Pinpoint Test EG1. If the symptom is "Backfires" or "Lacks Power," proceed to Pinpoint Test EX1.

NOTE: Failure to conform to the Federal Clean Air Act legal requirements for a particular vehicle and calibration is usually the result of one or more emission related system or component malfunctions.

Catalytic Converter: Pinpoint Tests

TEST STEP		RESULT ▶	ACTION TO TAKE
EG1	PERFORM EXHAUST GAS EMISSION TEST		
	• Conduct the Exhaust Emission Test on the vehicle, using certified testing equipment. • **Does the vehicle pass the test?**	Yes ▶ No ▶	End of testing. GO to Test EG2.

Pinpoint Test EG1

EG2	PERFORM EMISSION SYSTEM MALFUNCTION DETECTION BY QUICK TEST		
	• Perform the EEC Quick Test NOTE: Faults in the catalyst and exhaust system due to exhaust leaks or melted catalyst are not detectable by the EEC Quick Test. • **Are diagnostic trouble codes present?**	Yes ▶ No ▶	PERFORM the Pinpoint Test(s). REFER to Quick Test Step QT7 for direction. If the Pinpoint Test(s) check OK, PERFORM Test Steps EG3 through EG8 prior to powertrain control component replacement. GO to Test EX1. (Three way catalytic converter possibly melted or contaminated, or the exhaust system is restricted.)

Pinpoint Test EG2

EG3	CHECK EXHAUST GAS RECIRCULATION (EGR) SYSTEM FUNCTION (2.0L AND 2.5L ONLY)		
	• Refer to Section 10B for the correct procedure for checking the EGR system function. • Rerun the EEC Quick Test. • **Does the vehicle pass the EEC Quick Test?**	Yes ▶ No ▶	GO to EG9. SERVICE as required to eliminate the diagnostic trouble codes. GO to EG9.

Pinpoint Test EG3

EG4	CHECK EVAPORATIVE EMISSION (EVAP) SYSTEM FUNCTION		
	• Check the Evaporative Emission (EVAP) system function. • Rerun the EEC Quick Test. • **Does the vehicle pass the EEC Quick Test?**	Yes ▶ No ▶	GO to EG9. SERVICE as required to eliminate the diagnostic trouble codes. GO to EG9.

Pinpoint Test EG4

EG5	CHECK BYPASS AIR CONTROL AND AIR INTAKE SYSTEMS FUNCTION		
	• Check bypass air and air intake systems. • Rerun the EEC Quick Test. • **Does the vehicle pass the EEC Quick Test?**	Yes ▶ No ▶	GO to EG9. SERVICE as required to eliminate the diagnostic trouble codes. GO to EG9.

Pinpoint Test EG5

EG7	CHECK FUEL DELIVERY SYSTEM FUNCTION		
	• Check the fuel delivery system. • Rerun the EEC Quick Test. • **Does the vehicle pass the EEC Quick Test?**	Yes ▶ No ▶	GO to EG9. SERVICE as required to eliminate the diagnostic trouble codes. GO to EG9.

Pinpoint Test EG7

EG8	CHECK IGNITION SYSTEM FUNCTION		
	• Check the ignition system. • Rerun the EEC Quick Test. • **Does the vehicle pass the EEC Quick Test?**	Yes ▶ No ▶	GO to EG9. SERVICE as required to eliminate the diagnostic trouble codes. GO to EG9.

Pinpoint Test EG8

EG9	RERUN EXHAUST GAS EMISSION TEST		
	• After all diagnostic trouble codes have been eliminated (Tests EG3 through EG8), or other exhaust system corrections have been made (Tests EX1 through EX4), rerun the Exhaust Emission Test. • **Does the vehicle pass the test?**	Yes ▶ No ▶	End of testing. GO to EG10.

Pinpoint Test EG9

EG10	CHECK TEST EQUIPMENT CALIBRATION		
	• Verify the correctness of procedures used in the Exhaust Emission Test. • Determine if the test equipment has been damaged, tampered with, or misused by unqualified personnel. • Check the maintenance records on the test equipment. Note any instances of prior malfunction, age of equipment, and the expiration date of the current certification period. • Check the subject vehicle exhaust gas quality using other available equipment. • **Does the vehicle pass the Exhaust Emission Test on the alternate equipment?**	Yes ▶ No ▶	End of testing; SUBMIT the original equipment for repair and recertification. PERFORM Test Steps EG3 through EG8. If all check OK, RETURN to the Diagnostic Routines

Pinpoint Test EG10

TEST STEP		RESULT ▶	ACTION TO TAKE
EX1	PERFORM VACUUM TEST		
	• Attach Rotunda Vacuum / Pressure Tester 059-00008 or equivalent, to the intake manifold vacuum source. • Hook up Rotunda Digital Tachometer 055-00101 or equivalent. • Start the engine and gradually increase the engine speed to 2000 rpm with the transaxle in NEUTRAL (PARK on ATX) and the parking brake set. • **Is the manifold vacuum above 406.4 mm-Hg (16 in-Hg)?**	Yes ▶ No ▶	No restriction in the exhaust system. If sent here from EG2, GO to EG10. Otherwise, RETURN to the Diagnostic Routines. GO to EX2.

Pinpoint Test EX1

EX2	PERFORM VACUUM TEST — EXHAUST DISCONNECTED		
	• Turn the engine off. • Disconnect the exhaust system at the exhaust manifold. • **Repeat Test EX1. Is the manifold vacuum above 406.4 mm-Hg (16 in-Hg)?**	Yes No	▶ GO to EX3. ▶ GO to EX4.

Pinpoint Test EX2

EX3	PERFORM VACUUM TEST — THREE WAY CATALYTIC CONVERTER ON/MUFFLER OFF		
	• Turn the engine off. • Reconnect the exhaust system at the exhaust manifold. • Disconnect the muffler. • **Repeat Test EX1. Is the manifold vacuum above 406.4 mm-Hg (16 in-Hg)?**	Yes No	▶ REPLACE the muffler. ▶ REPLACE the three way catalytic converter and INSPECT the muffler to be sure converter debris has not entered the muffler. GO to EG9.

Pinpoint Test EX3

EX4	CHECK EXHAUST MANIFOLD RESTRICTION		
	• Remove the exhaust manifold(s). Inspect the ports for casting flash by dropping a length of chain into each port. NOTE: Do not use a wire or light to check ports. The restriction may be large enough for them to pass through but small enough to cause excessive back pressure at high engine rpm. • **Is the manifold free of casting flash?**	Yes No	▶ RETURN to the Diagnostic Routines, ▶ REPLACE the exhaust manifold. GO to EG9.

Pinpoint Test EX4

Catalytic Converter: Component Tests and General Diagnostics

EXHAUST SYSTEM CONNECTED

NOTE: A blocked or restricted exhaust system usually results in loss of power or popping through the intake. Before proceeding with diagnosis, verify that condition is not caused by ignition or timing problems.

1. Visually inspect exhaust system for collapsed pipes, holes and cracks.
   Replace any damaged components.
2. Attach vacuum gauge to intake manifold vacuum source.
3. Connect tachometer.
4. Start engine and observe vacuum gauge needle.
5. Gradually increase engine speed to 2000 rpm.

NOTE: Vacuum gauge reading may be normal when engine is first started and idled. However, excessive exhaust system restriction will cause vacuum reading to drop off while engine is idling.

6. Did manifold vacuum reach above 16 inches? If so, there is no restriction within the exhaust system. Decrease rpm to idle speed.

   If not, proceed to next step.

7. With vacuum gauge and tachometer still in place, increase engine speed to 2000 rpm.
8. While maintaining increased engine rpm, observe RATE at which vacuum gauge reading falls and rises:
   a. On a non-restricted system, gauge will drop to zero and then return to normal reading without delay.
   b. As engine speed is raised to 2000 rpm on a restricted system, gauge will slowly drop to zero and slowly rise to normal.
   c. Rate at which gauge reading returns to normal is much slower on a restricted system than on a non-restricted system.

9. Decrease engine rpm to base idle.
10. Was gauge return rate much slower than on a non-restricted system?
    If not, there is no exhaust system restriction.

    If so, proceed to next section.

1. Turn engine "OFF."
2. Disconnect exhaust system at muffler.
3. Repeat vacuum test.
4. Did manifold vacuum reach above 16"? If so, replace muffler. If not, proceed to next step.
5. Turn engine "OFF."
6. Disconnect exhaust system at catalytic converter.
7. Repeat vacuum test.
8. Did manifold vacuum reach above 16"? If so, replace converter. If not, proceed to next step.
9. Turn engine "OFF."
10. Disconnect exhaust system at exhaust manifold.
11. Repeat vacuum test.
12. Did manifold vacuum reach above 16". If so, restriction is located between exhaust manifold and catalytic converter. If not, proceed to next step.
13. Remove the exhaust manifold and inspect ports for casting flash by dropping a length of chain into each port.

NOTE: Do not use a wire or a lamp to check ports. Restriction may be large enough for wire or light to pass through but small enough to cause excessive back pressure at high rpm.

14. Is a restriction present? If so, remove casting flash or replace exhaust manifold.

Catalytic Converter: Service and Repair
Automatic Transaxle

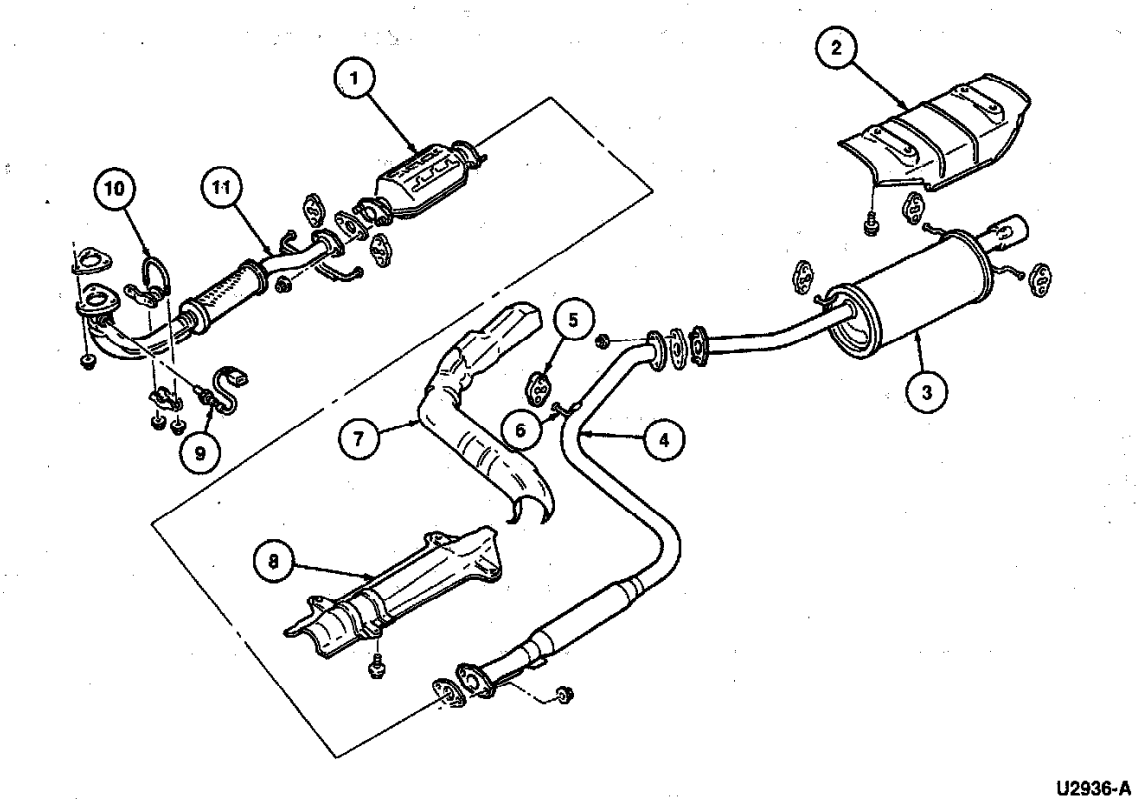

Item	Part Number	Description
1	5E212	Three-Way Catalytic Converter
2	112B28	Rear Floor Heat Deflector
3	5230	Muffler
4	5A289	Muffler Inlet Pipe and Resonator
5	5F262	Exhaust Hanger Insulator

Item	Part Number	Description
6	5277	Muffler Pipe Bracket
7	9A032	Fuel Tank Heat Shield
8	11166	Front Floor Pan Center Sound Insulator
9	9F472	Heated Oxygen Sensor
10	—	Exhaust Clamp
11	5246	Exhaust Inlet Pipe

Catalyst & Exhaust System

REMOVAL

1. Remove two converter inlet pipe to converter nuts. Discard nuts
2. Remove and discard gasket.
3. Remove two converter to middle pipe nuts. Discard nuts
4. Remove and discard gasket.
5. Remove converter.

INSTALLATION

1. Inspect converter for deterioration and restriction. Replace if needed.
2. Place converter in position. Install new gasket between converter and middle pipe.
3. Install new nuts and tighten to 47 - 66 ft lb (64 - 89 Nm).
4. Place new gasket between converter and inlet pipe.
5. Install new nuts and tighten to 47 - 66 ft lb (64 - 89 Nm).
6. Start engine and check for leaks.

Catalytic Converter: Service and Repair Manual Transaxle

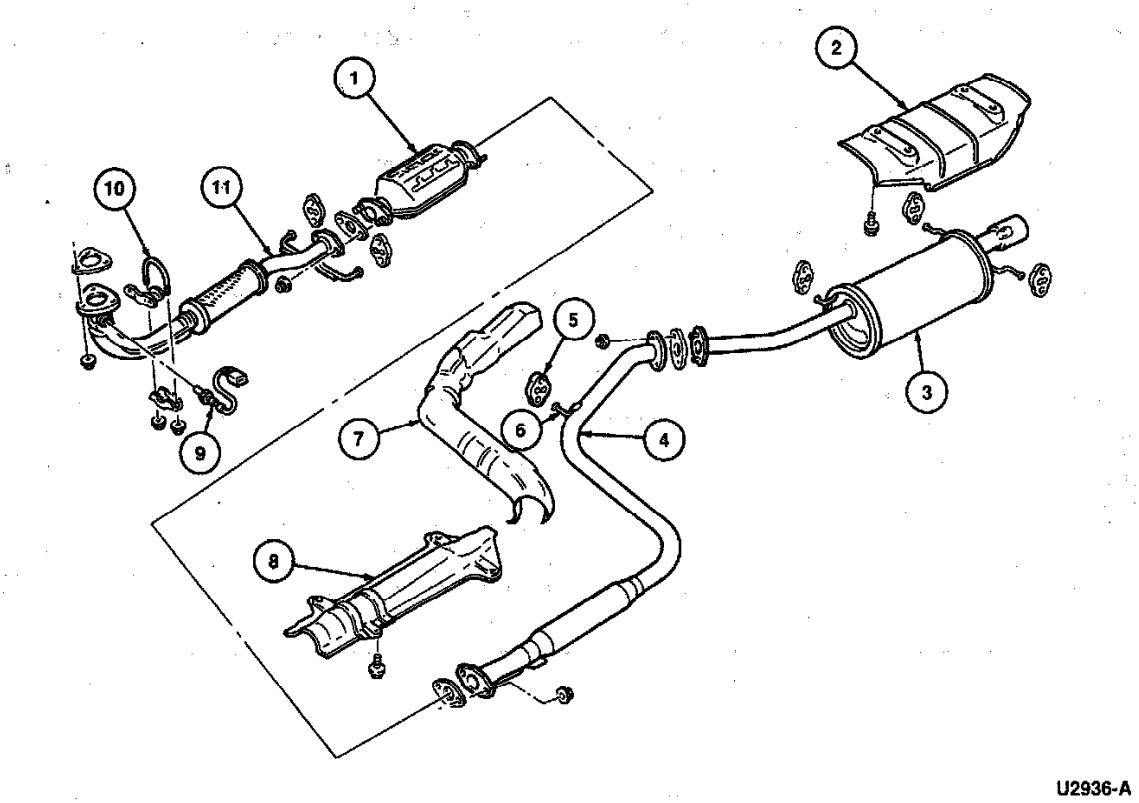

Item	Part Number	Description
1	5E212	Three-Way Catalytic Converter
2	112B28	Rear Floor Heat Deflector
3	5230	Muffler
4	5A289	Muffler Inlet Pipe and Resonator
5	5F262	Exhaust Hanger Insulator

Item	Part Number	Description
6	5277	Muffler Pipe Bracket
7	9A032	Fuel Tank Heat Shield
8	11166	Front Floor Pan Center Sound Insulator
9	9F472	Heated Oxygen Sensor
10	—	Exhaust Clamp
11	5246	Exhaust Inlet Pipe

Catalyst & Exhaust System

REMOVAL

1. Remove exhaust inlet pipe-to-converter nuts. Discard nuts.
2. Remove gasket and discard.
3. Remove converter-to-muffler inlet pipe and resonator nuts. Discard nuts.
4. Remove gasket and discard.
5. Remove converter.

INSTALLATION

1. Inspect converter for deterioration and restriction. Replace if needed.
2. Place converter into mounting position.
3. Install new gasket between converter and muffler inlet pipe and resonator.
4. Install new converter-to-muffler inlet pipe and resonator nuts.
5. Install new gasket between converter and exhaust inlet pipe.
6. Install new muffler inlet pipe-to-converter nuts.
7. Start engine and inspect for exhaust leaks.

Ignition System: Application and ID
Automatic Transmission

Engine VIN Code I.D. [1] ..... A
Engine Displacement ..... 2.0L (121.5 cid)
Engine Configuration ..... In-Line 4
Fuel Control System ..... Multiport Fuel Injection (MFI)
Ignition System [2] ..... Distributor Ignition (DI)
Computer System [3] ..... Mazda Engine Control Systems (MECS)

Remarks:
[1] Eighth digit of VIN denotes engine code.
[2] Automatic transaxle only.
[3] Automatic transaxle only.

Ignition System: Application and ID
Manual Transmission

Engine VIN Code I.D. [1] ..... A
Engine Displacement ..... 2.0L (121 cid)
Engine Configuration ..... In-Line 4
Fuel Control System ..... Multi-Point Fuel Injection (MFI)
Ignition System [2] ..... Distributor Ignition (DI)
Computer System [3] ..... Electronic Engine Controls (EEC-IV)

Remarks:

[1] The eighth digit of the VIN denotes engine code.
[2] Manual transaxle only.
[3] Manual transaxle only.

Ignition System: Description and Operation
Ignition Diagnostic Monitor (IDM)

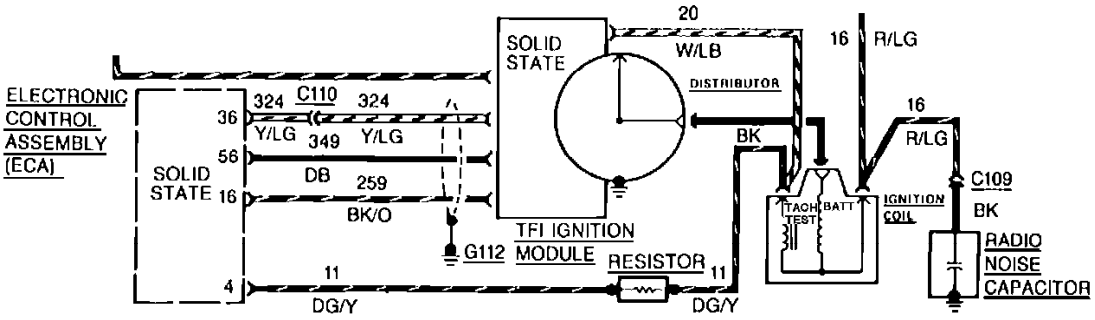

Ignition Diagnostic Monitor Schematic

The Ignition Diagnostic Monitor (IDM) circuit is an Powertrain Control Module (PCM) input from the negative terminal of the ignition coil. The input is a comparison reference, enabling the PCM to determine if the ignition primary circuit has an intermittent fault. When the PCM gets a Profile Ignition Pickup (PIP) signal and sends a Spark Output (SPOUT) signal to the ignition module, the signal should be observed by the IDM terminal at the PCM. Failure to monitor an ignition coil signal will result in the PCM setting an intermittent failure code into memory. This allows for more diagnostic leverage when attempting to service the vehicle.

Ignition System: Description and Operation
System Description

Automatic Transmission

IGNITION AND TIMING SYSTEMS

The ignition system provides spark control engine during all modes of engine operation. The system consists of 3 sub-systems; primary ignition, secondary ignition, and timing control.

The 1.3L, 1.8L, and 2.0L M/T engines use separate Ignition Control Module **(ICM)** and coil.

The 1.6L engines use an integrated distributor mounted system with vacuum advance.

The 2.0L 4EAT and 2.5L engines use a distributor with integrated coil and ignition control module.

PRIMARY IGNITION COMPONENTS

These components include coil primary circuit, ignition control module, and ignition switch. When ignition is switched "ON," it charges primary coil windings. When engine is running, ignition control module induces the spark by grounding coil primary circuit negative side.

SECONDARY IGNITION COMPONENTS

These components include spark plugs and wires, distributor cap, rotor, and coil secondary circuit. When ignition module grounds primary circuit, inductive charge built up in secondary circuit sends spark from coil to distributor. Rotor and cap then send spark to each plug.

ADVANCE COMPONENTS

Advance and retard functions for 1.3L, 1.8L, 2.0L, and 2.5L engines are Powertrain Control Module **(PCM)** controlled. PCM receives signals from various switches and sensors and sends spark timing signal to distributor.

The 1.6L turbo uses governor weights, a knock control module, and vacuum advance/boost retard diaphragm.

The 1.6L non-turbo uses governor weights and a dual vacuum advance diaphragm.

Manual Transmission

The Distributor Ignition (DI) System features a camshaft driven distributor which uses no centrifugal or vacuum advance, an Ignition Control Module (ICM), Powertrain Control Module (PCM), and an ignition coil.
The distributor houses a Hall effect vane switch assembly that sends crankshaft position information to the Ignition Control Module (ICM) where it's Computer Controlled Dwell (CCD) section sets ignition dwell. The signal is then used by the PCM for crankshaft position sensing and the computation of the desired spark advance based on engine demand and calibration. The conditioned spark advance and voltage distribution is accomplished through a conventional rotor, cap and ignition wires.

Ignition System: Testing and Inspection

Flow of Diagnosis

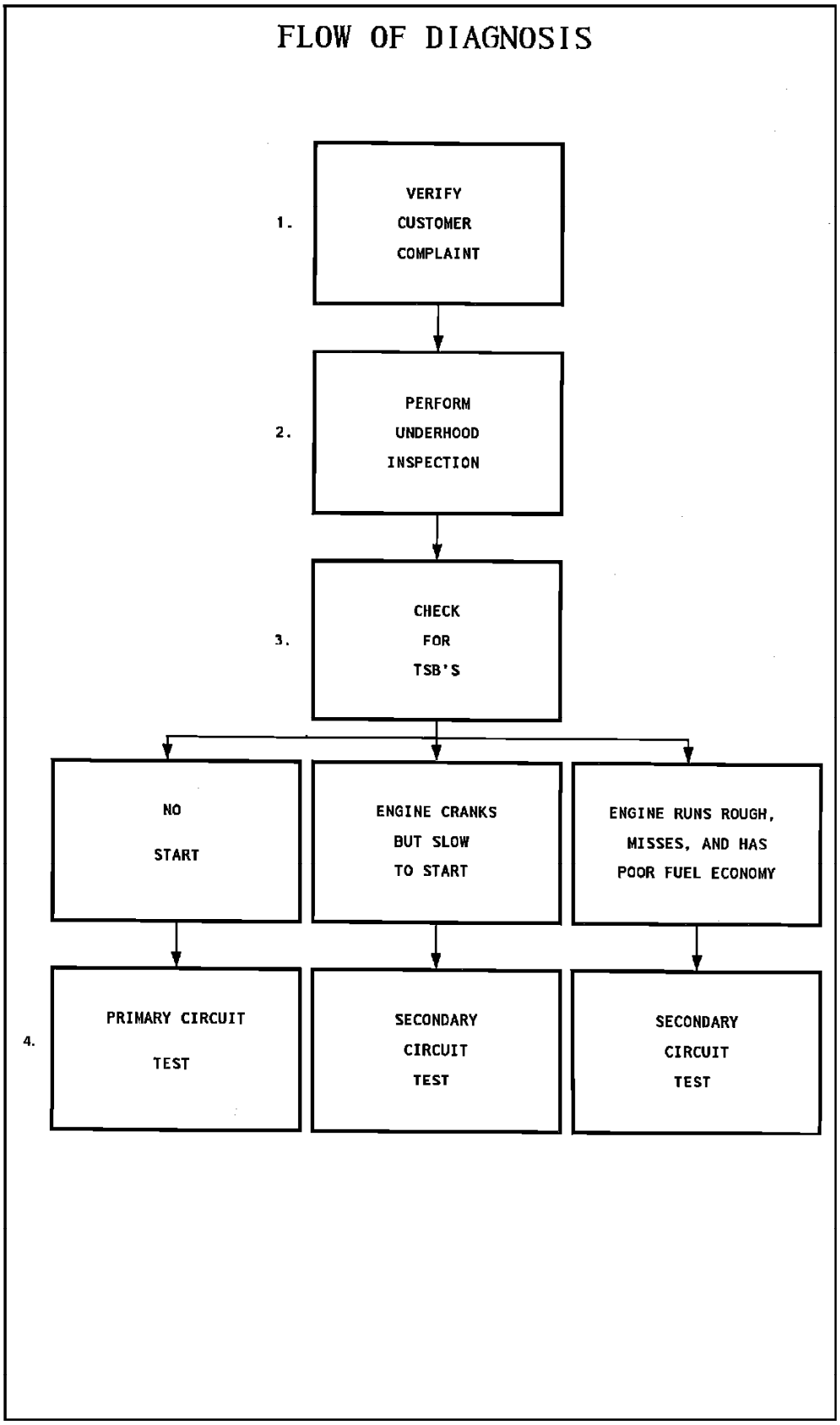

Flow of Diagnosis

1. Verify customer complaint by getting complete description from customer of when and where the problem occurs. Road test if necessary.
2. Perform underhood inspection:
   a. Visually inspect all wiring and components for evidence of loose connections, overheating, shorting, or any other damage.
   b. Check that spark plug wires are routed properly, are seated properly, (on the plugs and on the distributor) and are connected in the correct firing order.

c. Check that the distributor cap is seated properly and is not damp or cracked.
d. Check that the coil is not damp or cracked.
e. Do all components appear to be OK?
f. Check that the rotor is turning smoothly while the engine is cranking (timing belt check).

3. Check TSB's for updated diagnostic procedures, warranty and recall information.
4. The Primary Circuit Test checks the ignition coil only. For further testing refer to **Computers and Control Systems.**

Initial Inspection and Diagnostic Overview

1. Visually inspect ignition system components:
   ^ Damaged or worn distributor cap and rotor
   ^ Damaged spark plugs
   ^ Improperly seated spark plug, distributor cap or rotor.
   ^ Corroded, contaminated, or carbon fouled distributor cap
   ^ Discharged battery
   ^ Damaged or loose connectors
   ^ Damaged insulation
   ^ Poor coil, distributor and spark plug connections
   ^ Blown fuses

2. Check vehicle maintenance schedule to ensure that spark plugs and wires have been properly maintained.

3. Check spark plug wires and boots for signs of poor insulation that could cause cross firing.

4. A damaged or worn timing belt can cause symptoms that appear to be timing related.

5. Make sure idle speed and base timing are within specification.

Symptom	Action To Take
Engine no start and clear codes	GO to IGNA1.
Engine no start and code 211 - PIP circuit failure	GO to IGNA1.
Code 212 - IDM missing	GO to IGNB1.
Timing off, code 213 - Spark Output (SPOUT) open, lack of power, poor fuel economy	GO to IGNC1.
Clear codes or code 211 - intermittent miss or stall	GO to IGND1.
Clear codes and misfire under load - secondary short to ground	GO to IGN3.
Car continues to run after key is turned to OFF	CHECK ICM PWR for short to battery power.

Pinpoint Test Notes

NOTE: Some ignition system pinpoint tests are located under **Powertrain Management/Computer Controls/System Diagnosis** due to the relationship of some ignition systems to the Powertrain Control Module.

TEST STEP	RESULT ▶	ACTION TO TAKE
IGN1 CHECK FIRING ORDER		
• Inspect the routing of the spark plug wires. • Make sure the wires follow the firing order 1-3-4-2 on all engines except 2.5L (1-2-3-4-5-6 on 2.5L). • **Is firing order OK?**	Yes ▶ No ▶	GO to IGN2. SERVICE as required.

Pinpoint Test IGN1

IGN2	TEST SPARK AT PLUG(S)		
	• Connect a Rotunda Air Gap Spark Tester D81P-6666-A, or equivalent between the spark plug wire (plug end) and ground. Crank the engine, repeat on all spark plug wires. • **Does spark jump at each wire?**	Yes (Engine Runs) ▶	INSPECT the spark plugs, GO to IGN3.
		Yes (Engine Does Not Run) ▶	GO to , Fuel Delivery Systems.
		No (1.3L, 1.6L and 1.8L) ▶	GO to IGN10.
		No (2.0L 4EAT and 2.5L) ▶	GO to IGN11.

Pinpoint Test IGN2

	TEST STEP	RESULT ▶	ACTION TO TAKE
IGN3	CHECK SECONDARY DISPLAY		
	NOTE: If this portion of the diagnostic procedure is to provide accurate results, it is essential that the calibration of your engine analyzer be maintained. Refer to your equipment manual. If this is not available, an estimate of the calibration can be made by connecting the spark tester to a properly operating ignition system and measuring the firing voltage of the spark tester only. Do not include the firing voltage to the rotor-to-cap gap. The spark tester firing voltage should be approximately 28KV. • Connect a Rotunda Engine Analyzer 002-00373, or equivalent to view parade display of ignition secondary system. • **Slowly increase the engine rpm from idle to 2000 rpm, and compare the engine analyzer display to the following illustrations.**	▶	GO to IGN4.

Pinpoint Test IGN3

TEST STEP		RESULT ▶	ACTION TO TAKE
IGN4	CHECK SECONDARY DISPLAY (CONTINUED)		
	• **Is the evenness of spark plug firing voltage and the average value of spark plug firing voltage normal and stable?**	Yes (2.0L MTX) ▶	Ignition system operating properly. RETURN to Diagnostic Routines.
		Yes (1.3L, 1.8L, 2.0L 4EAT and 2.5L) ▶	GO to IST1.
		Yes (1.6L) ▶	GO to ADV1.
		No ▶	GO to IGN5.

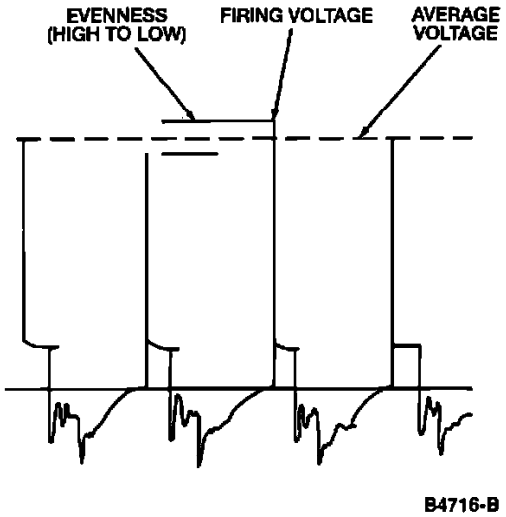

Pinpoint Test IGN4

TEST STEP	RESULT ▶	ACTION TO TAKE
IGN5 CHECK SECONDARY DISPLAY (CONTINUED)		
• **Is the evenness of the spark plug firing voltage too wide and the average value of spark plug firing voltage greater than normal?**	Yes ▶	Problems affecting all cylinders: - CHECK coil wire for proper installation in coil and distributor cap. - CHECK for wide spark plug gaps at all cylinders, (usually from worn electrodes due to high mileage). - INSPECT cap and rotor for problems causing excessive cap-to-rotor gap. - GO to IGN12.
	No ▶	GO to IGN6.

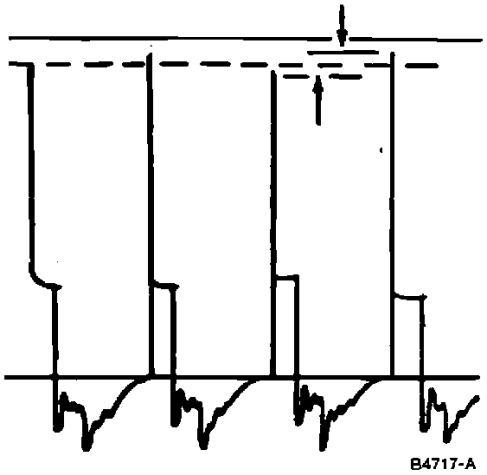

Pinpoint Test IGN5

TEST STEP	RESULT ▶	ACTION TO TAKE
IGN6 CHECK SECONDARY DISPLAY (CONTINUED)		
• **Is the evenness of the spark plug firing voltage greater than normal?**	Yes ▶	CHECK for ignition problems affecting some cylinders: - Wide spark plug gap(s) or worn electrode(s) - Improperly installed cap or rotor CHECK for mechanical problems affecting some cylinders: - Valves - Fuel injectors - Compression - Vacuum leaks
	No ▶	GO to IGN7.

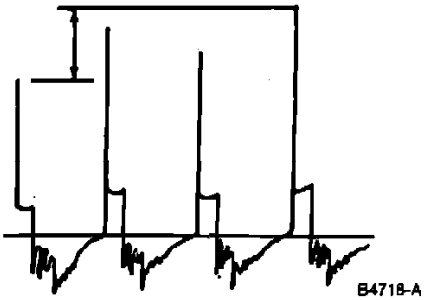

Pinpoint Test IGN6

TEST STEP	RESULT ▶	ACTION TO TAKE
IGN7 CHECK SECONDARY DISPLAY (CONTINUED)		
• **Is there consistently high spark plug firing voltage in one or more cylinders?**	Yes ▶	CHECK for ignition problems affecting some cylinders: - Spark plug wire(s) are firmly connected to distributor cap or spark plug. - Wide spark plug gap(s). - Open plug wire(s). - GO to IGN12. CHECK for mechanical problems affecting some cylinders: - Valves - Fuel injectors - Compression - Vacuum leaks
	No ▶	GO to IGN8.

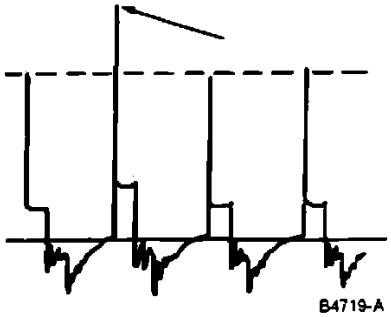

Pinpoint Test IGN7

TEST STEP	RESULT ▶	ACTION TO TAKE
IGN8 CHECK SECONDARY DISPLAY (CONTINUED)		
• **Is there consistently low spark plug firing voltage or sloping spark line in one or more cylinders?**	Yes ▶	CHECK for ignition problems affecting some cylinders: - Fouled spark plug(s) - Narrow spark plug gap(s) - Spark plug wire(s) grounding on engine. INSPECT for damage. - Carbon tracking in cap CHECK for mechanical problems affecting some cylinders: - Valves - Fuel Injectors - Compression - Vacuum leaks
	No ▶	GO to IGN9.

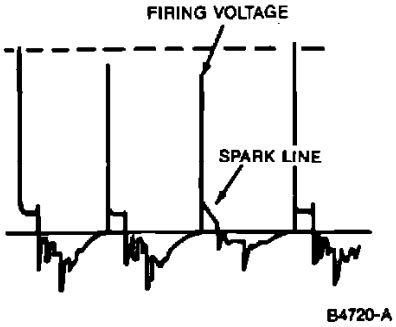

Pinpoint Test IGN8

TEST STEP	RESULT ▶	ACTION TO TAKE
IGN9 CHECK SECONDARY DISPLAY (CONTINUED)		
• **Is spark plug firing voltage reversed?**	Yes ▶	- CHECK to see if ignition coil primary circuit is reversed. If necessary make proper connections. - CHECK wiring harness for ignition coil primary circuit. If OK, REPLACE ignition coil (1.3L, 1.6L, 1.8L and 2.0L MTX) or distributor (2.0L 4EAT and 2.5L).
	No (all except 2.0L MTX) ▶	GO to IGN12.
	No (2.0L MTX) ▶	REEVALUATE symptom and RETURN to symptom chart at beginning of this section.

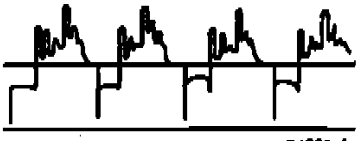

Pinpoint Test IGN9

IGN10 CHECK SPARK FROM COIL		
• Connect a spark tester between coil secondary output terminal and ground. • Crank the engine. • **Does spark jump?**	Yes ▶ No ▶	GO to IGN11. GO to IGN13.

Pinpoint Test IGN10

IGN11 CHECK DISTRIBUTOR ASSEMBLY		
• Check rotor, distributor cap, armature and module for wear, breakage, cracks and carbon buildup (black buildup) and oxidation (white buildup). • Crank the engine and verify the rotor turns steadily. • **Is the distributor assembly OK and does the rotor turn freely?**	Yes ▶ No ▶	GO to IGN12. SERVICE as required.

Pinpoint Test IGN11

TEST STEP		RESULT ▶	ACTION TO TAKE
IGN12	CHECK SPARK PLUG WIRE RESISTANCE		
	• Remove spark plug wire. **CAUTION: Do not under any circumstances puncture a spark plug wire when measuring resistance. Measure only as instructed.** • Measure the resistance of each spark plug wire. • **Is the resistance between 4,000-7,000 ohms per foot?**	Yes (1.3L and 1.8L) ▶	GO to IST1.
		Yes (1.6L) ▶	GO to ADV1.
		Yes (2.0L MTX) ▶	REEVALUATE symptom and RETURN to symptom chart at the beginning of this section.
		Yes (2.0L 4EAT and 2.5L) ▶	GO to IGN13.
		No ▶	REPLACE the spark plug wire(s).

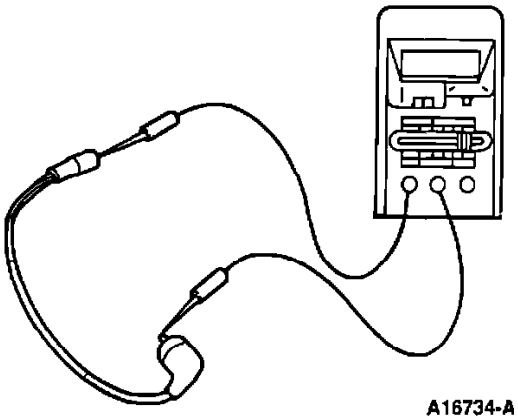

Pinpoint Test IGN12

TEST STEP	RESULT ▶	ACTION TO TAKE
IGN13 CHECK VOLTAGE AT IGNITION COIL		
• Disconnect the ignition coil connector (on distributor). • Key ON. • Measure the voltage on the follow wire at the ignition coil connector (on distributor for 2.0L 4EAT and 2.5L). • **Is the voltage greater than 10 volts?**	Yes ▶ No ▶	GO to IGN14. SERVICE the wire between the ignition switch and the ignition coil connector.

Engine	Wire Color
1.3L	BK/W
1.6L	BK/W
1.8L	BL
2.0L 4EAT	BK/PK
2.5L	BK/PK

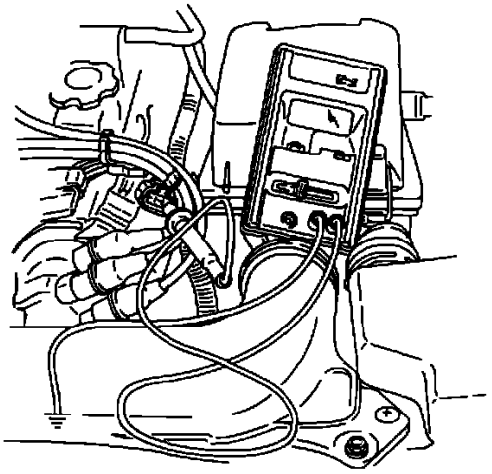

A17100-A

Pinpoint Test IGN13

TEST STEP	RESULT ▶	ACTION TO TAKE
IGN14 CHECK IGNITION COIL RESISTANCE		
• Disconnect the wire(s) from the ignition coil. • Measure: • **Are the resistance readings within specifications?**	Yes (1.3L, 1.6L and 1.8L) ▶ Yes (2.0L 4EAT and 2.5L) ▶ No ▶	GO to EEC Pinpoint Test IDM. GO to EEC Pinpoint Test ICM. REPLACE the ignition coil (1.3L, 1.6L and 1.8L) or distributor (2.0L 4EAT and 2.5L).

Engine	Coil	Terminals	Resistance
1.3L, 1.6L, 1.8L	Primary	Positive to negative	0.8 to 1.6 ohms
	Secondary	Positive to high voltage	6 to 30 kohms
2.0L 4EAT	Primary	Positive to negative	0.58 to 1.10 ohms
	Secondary	Positive to high voltage	1.15 to 18.5 kohms
2.5L	Primary	Positive to negative	0.58 to 0.86 ohms
	Secondary	Positive to high voltage	1.15 to 18.5 kohms

Pinpoint Test IGN14

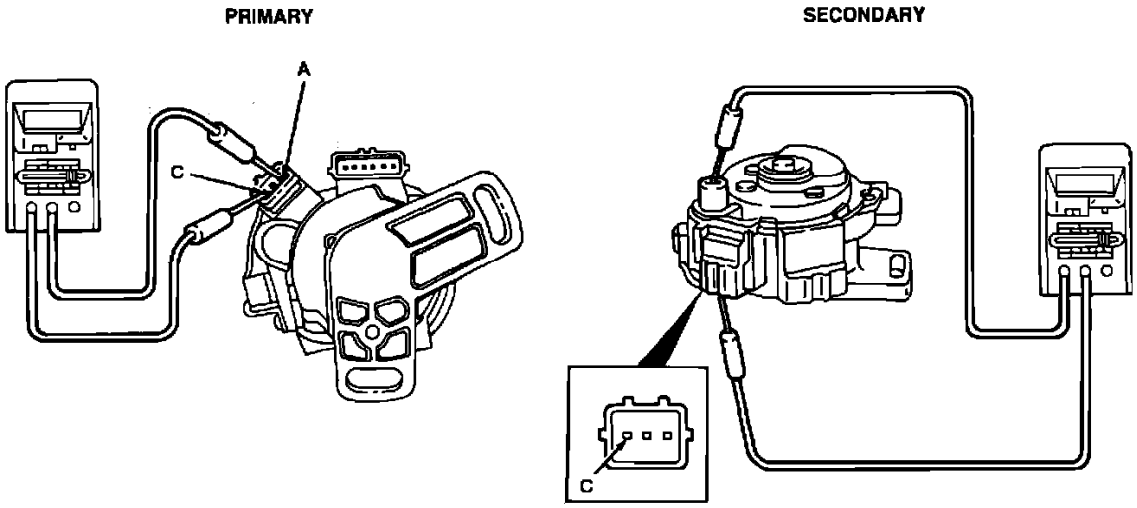

Coil Testing

TEST STEP	RESULT ▶	ACTION TO TAKE
IST1 CHECK IDLE SPEED		
• Start the engine and run until at normal operating temperature. • Engine at idle. • All electrical loads off. • Connect Rotunda Digital Photoelectric Tachometer 055-00108, or equivalent. • Ground STI connector. • Compare idle speed with chart:	Yes ▶ No ▶	GO to IST2. ADJUST idle speed.

Engine	Idle Speed
1.3L MTX	700 ± 20 rpm
1.3L ATX	850 ± 20 rpm
1.8L	750 ± 50 rpm
2.0L 4EAT	700 ± 50 rpm
2.5L	650 ± 50 rpm

• **Is idle speed within specifications?**

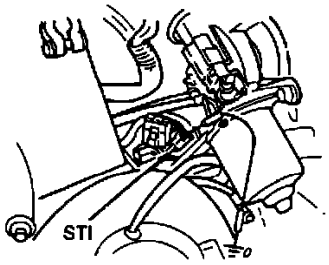

1.3L

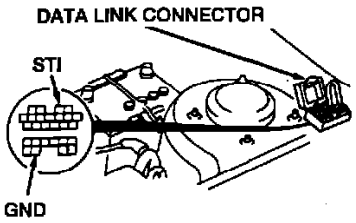

1.8L

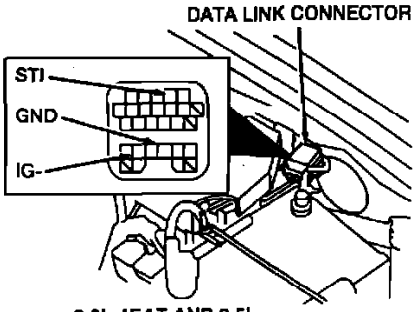

2.0L 4EAT AND 2.5L

A14079-D

Pinpoint Test IST1

TEST STEP	RESULT ▶	ACTION TO TAKE
IST2 CHECK BASE TIMING		
• Start the engine and run until at normal operating temperature. • Engine at idle. • All electrical loads off. • Connect a Rotunda Advance Timing Analyzer 059-00006, or equivalent. • Ground STI connector. • Compare timing with chart:	Yes ▶ No ▶	RETURN to the Diagnostic Routines. ADJUST the timing.

Engine	Base Timing
1.3L	10 degrees ± 1 degree BTDC
1.8L	10 degrees ± 1 degree BTDC
2.0L	12 degrees ± 1 degree BTDC
2.5L	10 degrees ± 1 degree BTDC

• **Is timing within specifications?**

1.3L and 1.8L

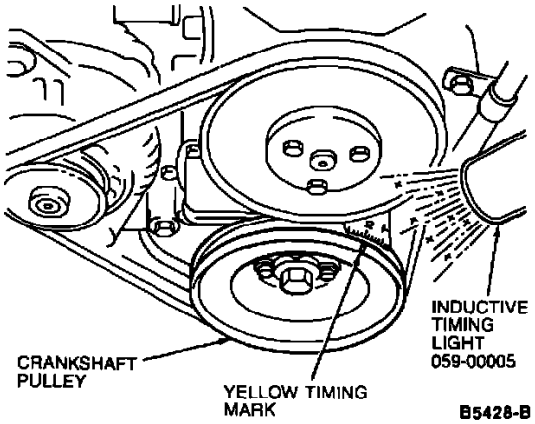

Pinpoint Test IST2

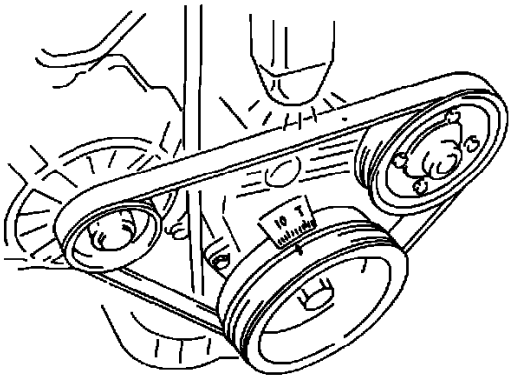

Timing Marks

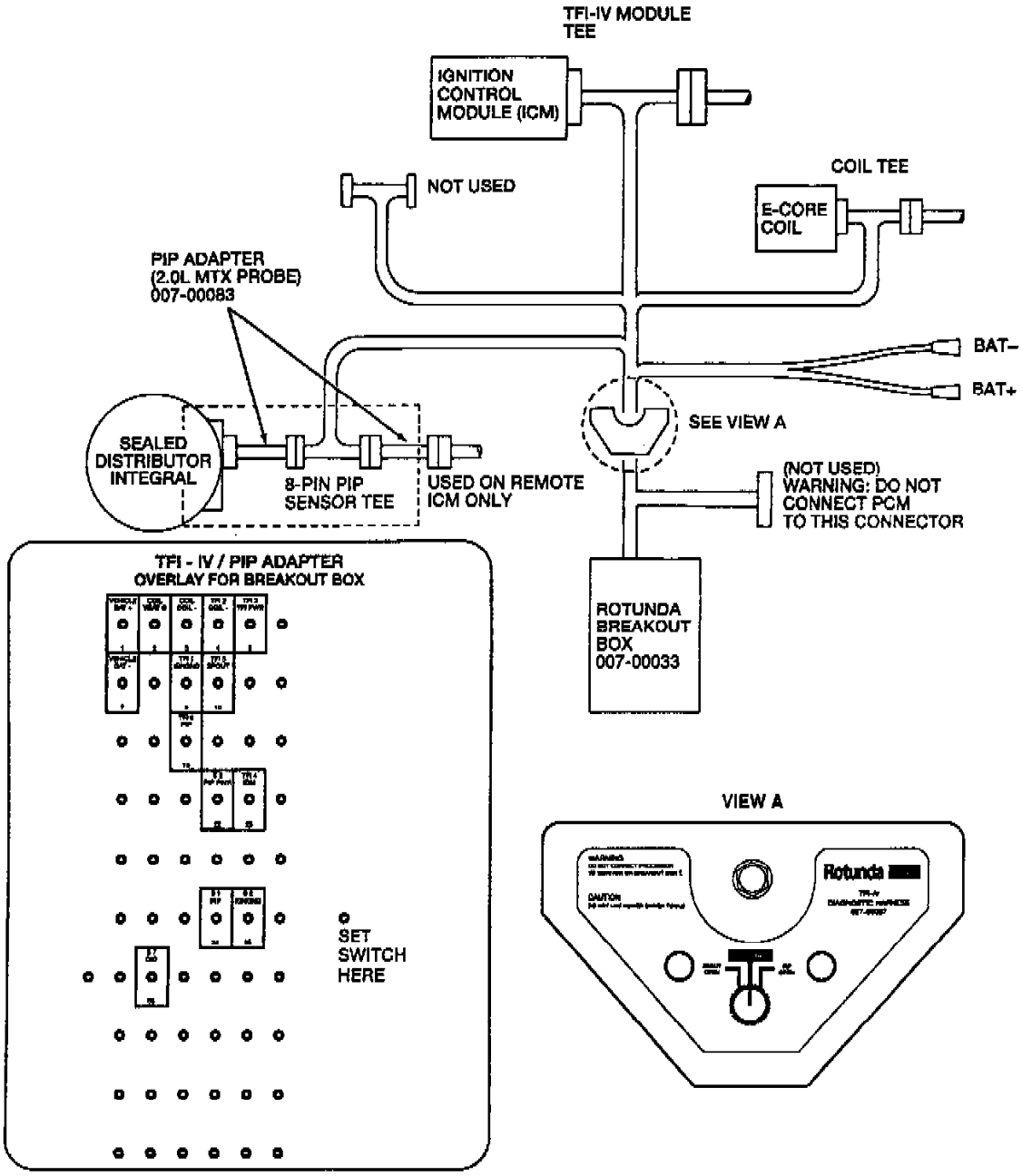

Diagnostic Equipment

SPECIAL SERVICE TOOLS

Tool Number	Description
D81P-6666-A	Air Gap Spark Tester
D79P-6666-A	Spark Plug Boot Puller

ROTUNDA EQUIPMENT

Model	Description
007-00033	Breakout Box
055-00108	Digital Photoelectric Tachometer
105-00051	Digital Volt-Ohmmeter
002-00373	Engine Analyzer
007-00035	TFI/EEC-IV Intermittent Ignition Analyzer
007-00097	TFI-IV Diagnostic Cable
059-00014	Timing Analyzer

021-00014 Vacuum Tester

IGN3 - Check Secondary Display

NOTE: If this portion of the diagnostic procedure is to provide accurate results, it is essential that the calibration of your engine analyzer be maintained. Refer to your equipment manual. It this is not available, an estimate of the calibration can be made by connecting the spark tester to a properly operating ignition system and measuring the firing voltage of the spark tester only. Do not include the firing voltage to the rotor-to-cap gap. The spark tester firing voltage should be approximately 28KV.

^ Connect a Rotunda Engine Analyzer 002-00373, or equivalent to view parade display of ignition secondary system.

^ Slowly increase the engine rpm from idle to 2000 rpm, and compare the engine analyzer display to the illustrations in the following tests.

^ GO to IGN4. See: Pinpoint Tests/Manual Transmission/IGN - Secondary System Check/IGN4 - Check Secondary Display (Continued)

IGN4 - Check Secondary Display (Continued)

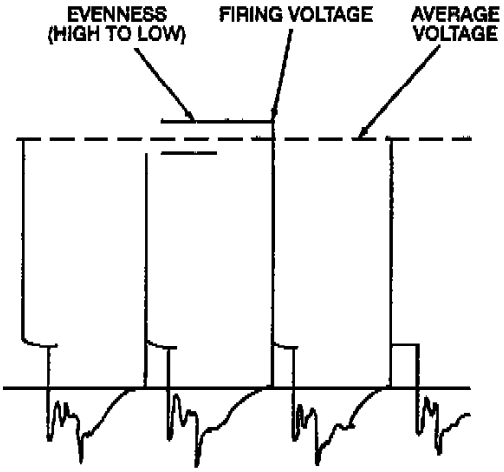

High Firing Voltage

^ **Is the evenness of spark plug firing voltage and the average value of spark plug firing voltage normal and stable?**

YES -- Ignition system operating properly. Return to Diagnostic Routines.

NO -- GO to IGN5. See: Pinpoint Tests/Manual Transmission/IGN - Secondary System Check/IGN5 - Check Secondary Display (Continued)

IGN5 - Check Secondary Display (Continued)

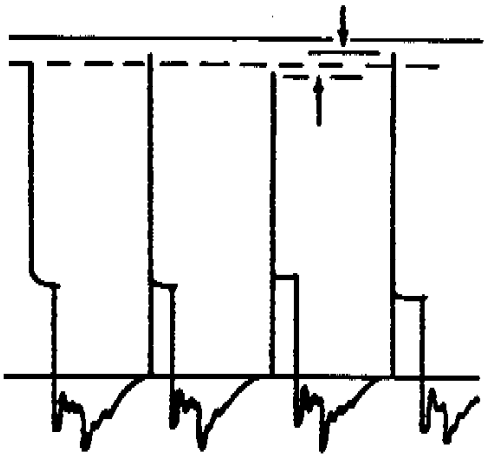

Uneven Firing Voltages

^ **Is the evenness of the spark plug firing voltage too wide and the average value of spark plug firing voltage greater than normal?**

YES -- Problems affecting all cylinders:

- Check coil wire for proper installation in coil and distributor cap.

- Check for wide spark plug gaps at all cylinders, (usually from worn electrodes due to high mileage).
- Inspect cap and rotor for problems causing excessive cap-to-rotor gap.

NO -- GO to IGN6. See: Pinpoint Tests/Manual Transmission/IGN - Secondary System Check/IGN6 - Check Secondary Display (Continued)

IGN6 - Check Secondary Display (Continued)

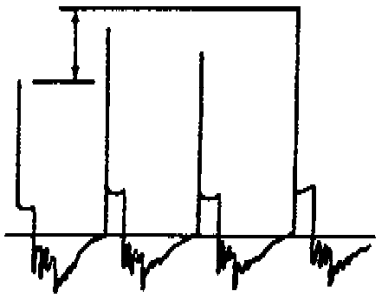

Uneven Firing Voltages

^ **Is the evenness of the spark plug firing voltage greater than normal?**

YES -- Check for problems affecting some cylinders:

- Wide spark plug gap(s) or worn electrode(s)
- Improperly installed cap or rotor
- Valves
- Fuel injectors
- Compression
- Vacuum leaks

NO -- GO to IGN7. See: Pinpoint Tests/Manual Transmission/IGN - Secondary System Check/IGN7 - Check Secondary Display (Continued)

IGN7 - Check Secondary Display (Continued)

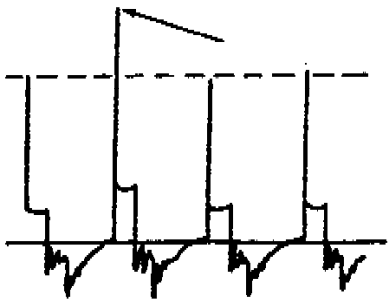

High Firing Voltage

^ **Is there consistently high spark plug firing voltage In one or more cylinders?**

YES -- Check for problems affecting some cylinders:

- Spark plug wire(s) are firmly connected to distributor cap or spark plug.
- Wide spark plug gap(s).
- Open plug wire(s).
- Valves

- Fuel injectors
- Compression
- Vacuum leaks

NO -- GO to IGN8. See: Pinpoint Tests/Manual Transmission/IGN - Secondary System Check/IGN8 - Check Secondary Display (Continued)

IGN8 - Check Secondary Display (Continued)

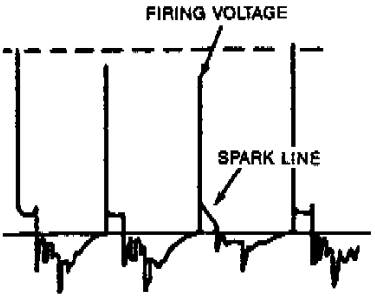

Low Firing Voltage Or A Sloping Spark Line

^ **Is there consistently low spark plug firing voltage or sloping spark line in one or more cylinders?**

YES -- Check for ignition problems affecting some cylinders:

- Fouled spark plug(s)
- Narrow spark plug gap(s)
- Spark plug wire(s) grounding on engine.
- Carbon tracking in cap
- Valves
- Fuel Injectors
- Compression
- Vacuum leaks

NO -- GO to IGN9. See: Pinpoint Tests/Manual Transmission/IGN - Secondary System Check/IGN9 - Check Secondary Display (Continued)

IGN9 - Check Secondary Display (Continued)

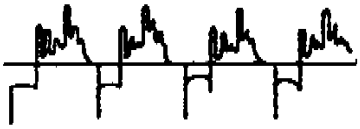

Reversed Secondary Polarity

^ **Is spark plug firing voltage reversed?**

YES:

- Check to see if ignition coil primary circuit is reversed. If necessary make proper connections.
- Check wiring harness for ignition coil primary circuit. If OK, replace ignition coil.

NO -- Reevaluate symptom and return to diagnosis by symptom.

IGNA1 - Check For EEC IV Quick Test Completion

^ **Were all tests accomplished according to EEC IV quick test procedures?**

YES -- GO to IGNA2. See: Pinpoint Tests/Manual Transmission/IGNA - Engine No Start/IGNA2 - Check For Good Battery

NO -- Refer to Diagnostic Routines.

IGNA2 - Check For Good Battery

^ **Is battery voltage greater than 10 volts DC with the key ON?**

YES -- GO to IGNA3. See: Pinpoint Tests/Manual Transmission/IGNA - Engine No Start/IGNA3 - Check For Spark at Coil During Crank

NO -- Service battery.

IGNA3 - Check For Spark at Coil During Crank

^ Use an Air Gap Spark Tester (D81P-6666-A) or equivalent to check for spark during crank at coil wire.

^ **Was spark present during crank?**

YES -- GO to IGNA9. See: Pinpoint Tests/Manual Transmission/IGNA - Engine No Start/IGNA9 - Check For Spark at All Wires

NO -- GO to IGNA4. See: Pinpoint Tests/Manual Transmission/IGNA - Engine No Start/IGNA4 - Check For TFI Power

IGNA4 - Check For TFI Power

^ Key OFF.

^ Connect Rotunda TFI Diagnostic Cable 007-00097, or equivalent to Rotunda Breakout Box 007-00033, or equivalent. Connect BAT- lead to negative post of battery, and connect TFI module tee to Ignition Control Module and vehicle harness.

^ Do not connect BAT+ lead of TFI Diagnostic Cable to battery.

CAUTION: Do not connect PCM to Breakout Box when it is used with TFI Diagnostic Cable.

^ Make sure PIP OPEN/NORMAL/SPOUT OPEN switch on TFI Diagnostic Cable is in the NORMAL position.

^ Use TFI overlay on Breakout Box.

^ DVOM on DC volt scale.

^ Key ON.

^ Measure voltage between Pin 5 (ICM PWR) and Pin 7 (BAT-) at Breakout Box.

^ **Is voltage greater than 10 volts DC?**

YES -- GO to IGNA5. See: Pinpoint Tests/Manual Transmission/IGNA - Engine No Start/IGNA5 - Check For PIP Signal

NO -- Service power open to Ignition Control Module in harness or connector. Remove all test equipment. Reconnect all components. Clear continuous memory. Rerun quick test.

IGNA5 - Check For PIP Signal

^ DVOM on AC volt scale.

^ Crank engine and measure voltage between Pin 15 (PIP) and Pin 7 (BAT-).

^ **Is voltage between 3.0 and 8.5 volts AC?**

YES -- GO to IGNA6. See: Pinpoint Tests/Manual Transmission/IGNA - Engine No Start/IGNA6 - Check For Spout Signal

NO -- GO to IGNA11. See: Pinpoint Tests/Manual Transmission/IGNA - Engine No Start/IGNA11 - Check For PIP Power at PIP Sensor

IGNA6 - Check For Spout Signal

^ Crank engine and measure voltage between Pin 10 (SPOUT) and Pin 7 (BAT-).

^ **Is voltage between 3.0 and 8.5 volts AC?**

YES -- GO to IGNA7. See: Pinpoint Tests/Manual Transmission/IGNA - Engine No Start/IGNA7 - Check VBAT at Coil

NO -- Go to IGNA15. See: Pinpoint Tests/Manual Transmission/IGNA - Engine No Start/IGNA15 -Check For Spout Signal In Harness

IGNA7 - Check VBAT at Coil

^ Key OFF.

^ Connect diagnostic cable coil tee to vehicle harness; do not connect diagnostic cable to coil.

^ Key ON.

^ DVOM on DC volt scale.

^ Measure voltage between Pin 2 (VBAT C) and Pin 7 (BAT-).

^ **Is voltage greater than 10 volts DC?**

YES -- GO to IGNA8. See: Pinpoint Tests/Manual Transmission/IGNA - Engine No Start/IGNA8 - Check For Coil (-) Signal

NO -- Service power open to coil in harness or connector. Remove all test equipment. Reconnect all components. Clear continuous memory. Rerun quick test.

IGNA8 - Check For Coil (-) Signal

^ Key off.

^ Connect BAT+ lead of TFI diagnostic cable to positive post of battery.

^ Connect 12 volt incandescent test lamp between Pin 1 (BAT+) and Pin 3 (COIL-).

^ Key ON.

^ Crank engine.

^ **Did test lamp flash brightly?**

YES -- Replace coil. Remove all test equipment. Reconnect all components. Clear continuous memory. Rerun quick test.

NO -- Go to IGNA23. See: Pinpoint Tests/Manual Transmission/IGNA - Engine No Start/IGNA23 - Check For Coil (-) Open In Harness

IGNA9 - Check For Spark at All Wires

^ Use an Air Gap Spark Tester (D81P-6666-A) or equivalent to check for spark at all wires.

^ **Was spark present at all plugs during crank?**

YES -- GO to IGNA10. See: Pinpoint Tests/Manual Transmission/IGNA - Engine No Start/IGNA10 - Check Plugs

NO -- Service distributor cap, rotor, plugs or plug wires. Remove all test equipment. Reconnect all components. Clear continuous memory. Rerun quick test.

IGNA10 - Check Plugs

^ Remove and check plugs for damage, wear, carbon deposits and proper plug gap.

^ **Are plugs OK?**

YES -- Not an Ignition problem, refer to Diagnostic Routines.

NO -- Service plugs. Remove all test equipment. Reconnect all components. Clear continuous memory. Rerun quick test.

IGNA11 - Check For PIP Power at PIP Sensor

^ Connect diagnostic cable PIP sensor tee to PIP sensor and vehicle harness.

^ DVOM on DC volt scale.

^ Key ON.

^ Measure voltage between Pin 22 (PIP PWR) and Pin 7 (BAT-).

^ **Is voltage greater than 10 volts DC?**

YES -- GO to IGNA12. See: Pinpoint Tests/Manual Transmission/IGNA - Engine No Start/IGNA12 - Check PIP Sensor

NO -- Service power to PIP sensor in harness or connector. Remove all test equipment. Reconnect all components. Clear continuous memory. Rerun quick test.

IGNA12 - Check PIP Sensor

^ Key OFF.

^ Disconnect diagnostic harness PIP sensor tee from PIP sensor only; leave PIP sensor tee connected to vehicle harness.

^ DVOM on DC volt scale.

^ Key ON.

^ Measure the voltage between Pin 34 (PIP) and Pin 7 (BAT).

^ **Is the voltage greater than 9 volts DC?**

YES -- Check PIP sensor wiring, if OK replace distributor. Remove all test equipment. Reconnect all components. Clear continuous memory. Rerun quick test.

NO -- GO to IGNA13. See: Pinpoint Tests/Manual Transmission/IGNA - Engine No Start/IGNA13 - Check PIP Signal With TFI Disconnected

IGNA13 - Check PIP Signal With TFI Disconnected

^ Key OFF.

^ Reconnect diagnostic harness PIP sensor tee to PIP sensor.

^ Turn switch on diagnostic cable to NORMAL.

^ Disconnect diagnostic harness TFI module tee from Ignition Control Module only; leave TFI module tee connected to vehicle harness.

^ Crank engine and measure voltage between Pin 34 (PIP) and Pin 7 (BAT-).

^ **Is voltage between 3.0 and 8.5 volts AC?**

YES -- Replace Ignition Control Module. Remove all test equipment. Reconnect all components. Clear continuous memory. Rerun quick test.

NO -- GO to IGNA14. See: Pinpoint Tests/Manual Transmission/IGNA - Engine No Start/IGNA14 - Check PCM PIP Signal

IGNA14 - Check PCM PIP Signal

^ Key OFF.

^ Disconnect diagnostic cable PIP sensor tee from PIP sensor only; leave PIP sensor tee connected to vehicle harness.

^ Disconnect PCM.

^ Measure the resistance between Pin 34 (PIP) and ground.

^ **Is the resistance greater than 10,000 ohms?**

YES -- Replace the PCM. Remove all test equipment. Reconnect all components. Clear continuous memory. Rerun quick test.

NO -- Service PIP between PIP sensor and PCM or Ignition Control Module in harness for short. Remove all test equipment. Reconnect all components. Clear continuous memory. Rerun quick test.

IGNA15 -Check For Spout Signal In Harness

^ Turn switch to SPOUT OPEN position on diagnostic cable.

^ Crank engine and measure voltage between Pin 10 (SPOUT) and Pin 7 (BAT-).

^ **Is voltage between 3.0 and 8.5 volts AC?**

NOTE: Engine may start, continue diagnostics.

YES -- Replace Ignition Control Module. Remove all test equipment. Reconnect all components. Clear continuous memory. Rerun quick test.

NO -- GO to IGNA16. See: Pinpoint Tests/Manual Transmission/IGNA - Engine No Start/IGNA15 -Check For Spout Signal In Harness

IGNA16 - Check Spout Signal Voltage

^ Key OFF.

^ Disconnect diagnostic cable TFI module tee from Ignition Control Module only; leave TFI module tee connected to vehicle harness.

^ Turn switch to NORMAL on diagnostic cable.

^ DVOM on DC volt scale.

^ Measure voltage between Pin 10 (SPOUT) and Pin 7 (BAT-), with key ON.

^ **Is voltage less than 0.5 volt DC?**

YES -- GO to IGNA18. See: Pinpoint Tests/Manual Transmission/IGNA - Engine No Start/IGNA18 - Check For Spout Circuit Short to Ground

NO -- GO to IGNA17. See: Pinpoint Tests/Manual Transmission/IGNA - Engine No Start/IGNA17 - Check For Spout Circuit Short to Power

IGNA17 - Check For Spout Circuit Short to Power

^ Key OFF.

^ Disconnect PCM.

^ Measure voltage between Pin 10 (SPOUT) and Pin 7 (BAT-) with key ON.

^ **Is voltage less than 0.5 volt DC?**

YES -- GO to IGNA19. See: Pinpoint Tests/Manual Transmission/IGNA - Engine No Start/IGNA19 - Check For PIP Circuit Open

NO -- Service SPOUT between PCM and Ignition Control Module in harness for short to power. Remove all test equipment. Reconnect all components. Clear continuous memory. Rerun quick test.

IGNA18 - Check For Spout Circuit Short to Ground

^ Disconnect PCM.

^ Measure resistance between Pin 10 (SPOUT) and Pin 7 (BAT-).

^ **Is resistance greater than 10K ohms?**

YES -- GO to IGNA19. See: Pinpoint Tests/Manual Transmission/IGNA - Engine No Start/IGNA19 - Check For PIP Circuit Open

NO -- Service SPOUT between PCM and Ignition Control Module in harness for short to ground. Remove all test equipment. Reconnect all components. Clear continuous memory. Rerun quick test.

IGNA19 - Check For PIP Circuit Open

^ Key OFF.

^ DVOM on AC volt scale.

^ Install Breakout Box.

^ Crank engine and measure voltage between BOB Pin 56 (PIP) and BOB Pin 60 (GND).

^ **Is voltage between 3.0 and 8.5 volts AC?**

YES -- GO to IGNA20. See: Pinpoint Tests/Manual Transmission/IGNA - Engine No Start/IGNA20 - Check IGN GND at PCM

NO -- GO to IGNA22. See: Pinpoint Tests/Manual Transmission/IGNA - Engine No Start/IGNA22 - Check PIP Signal at PIP Sensor

IGNA20 - Check IGN GND at PCM

^ Key OFF.

^ Reconnect diagnostic cable TFI module tee to Ignition Control Module.

^ DVOM on ohm scale.

^ Disconnect PCM.

^ Measure resistance between Pin 16 (IGN GND) of PCM harness connector and Pin 7 (BAT-) at the breakout box.

^ **Is resistance less than 5.0 ohms?**

YES -- Replace PCM. Remove all test equipment. Reconnect all components. Clear continuous memory. Rerun quick test.

NO -- GO to IGNA21. See: Pinpoint Tests/Manual Transmission/IGNA - Engine No Start/IGNA21 - Check For IGN GND at PIP Sensor

IGNA21 - Check For IGN GND at PIP Sensor

^ Connect diagnostic cable PIP sensor tee to PIP sensor and vehicle harness.

^ Measure resistance between Pin 35 (IGN GND) and Pin 7 (BAT-).

^ **Is resistance less than 5.0 ohms?**

YES -- Service IGN GND between PCM and PIP sensor in harness for open. Remove all test equipment. Reconnect all components. Clear continuous memory. Rerun quick test.

NO -- Service IGN GND wire or replace distributor. IGN GND open in PIP sensor. Remove all test equipment. Reconnect all components. Clear continuous memory. Rerun quick test.

IGNA22 - Check PIP Signal at PIP Sensor

^ Key OFF.

^ Connect diagnostic cable PIP sensor tee to vehicle harness.

^ DVOM on DC volt scale.

^ Key ON.

^ Measure the voltage between Pin 34 (PIP) and Pin 7 (BAT-).

^ **Is the voltage greater than 9 volts DC?**

YES -- Replace distributor. PIP open in PIP sensor Remove all test equipment. Reconnect all components. Clear continuous memory. Rerun quick test.

NO -- Service PIP open in harness between PCM and PIP sensor. Remove all test equipment. Reconnect all components. Clear continuous memory. Rerun quick test.

IGNA23 - Check For Coil (-) Open In Harness

^ Key OFF.

^ Disconnect the PCM.

^ Disconnect diagnostic cable TFI module tee from Ignition Control Module only; leave TFI module tee connected to vehicle harness.

^ Disconnect BAT+ lead of TFI diagnostic cable from battery.

^ DVOM on ohm scale.

^ Measure the resistance between Pin 3 (COIL-) and Pin 4 (TFI2 COIL-).

^ **Is resistance less than 5.0 ohms?**

YES -- GO to IGNA24. See: Pinpoint Tests/Manual Transmission/IGNA - Engine No Start/IGNA24 - Check For Coil (-) Circuit Short to Ground

NO -- Service open coil between Ignition Control Module and coil in harness. Remove all test equipment. Reconnect all components. Clear continuous memory. Rerun quick test.

IGNA24 - Check For Coil (-) Circuit Short to Ground

^ Key OFF.

^ Disconnect the PCM.

^ DVOM on ohm scale.

^ Measure resistance between Pin 3 (COIL-) and Pin 7 (BAT-).

^ **Is resistance greater than 10K ohms?**

YES -- GO to IGNA25. See: Pinpoint Tests/Manual Transmission/IGNA - Engine No Start/IGNA25 - Check For Coil (-) Short to Power

NO -- Service coil - short to ground in harness between coil and Ignition Control Module. Coil may be damaged. Remove all test equipment. Reconnect all components. Clear continuous memory. Rerun quick test.

IGNA25 - Check For Coil (-) Short to Power

^ DVOM on DC volt scale.

^ Key ON.

^ Measure voltage between Pin 3 (COIL-) and Pin 7 (BAT-).

^ **Is voltage less than 5.5 volts DC?**

YES -- GO to IGNA26. See: Pinpoint Tests/Manual Transmission/IGNA - Engine No Start/IGNA26 - Check GND at Ignition Control Module

NO -- Service coil - short to power in harness between coil and Ignition Control Module. Remove all test equipment. Reconnect all components. Clear continuous memory. Rerun quick test.

IGNA26 - Check GND at Ignition Control Module

^ Key OFF.

^ DVOM on ohm scale.

^ Measure resistance between Pin 9 (IGN GND) and Pin 7 (BAT-).

^ **Is resistance less than 5.0 ohms?**

YES -- Replace Ignition Control Module. Remove all test equipment. Reconnect all components. Clear continuous memory. Rerun quick test.

NO -- Go to IGNA27. See: Pinpoint Tests/Manual Transmission/IGNA - Engine No Start/IGNA27 - Check GND at PIP Sensor

IGNA27 - Check GND at PIP Sensor

^ Connect diagnostic cable PIP sensor tee to the PIP sensor and vehicle harness.

^ Measure resistance between Pin 35 (GND) and Pin 7 (BAT-).

^ **Is resistance less than 5.0 ohms?**

YES -- Service open GND in harness between PIP sensor and Ignition Control Module. Remove all test equipment. Reconnect all

components. Clear continuous memory. Rerun quick test.

NO -- Service GND wire or replace distributor. GND open in PIP sensor or connector. Remove all test equipment. Reconnect all components. Clear continuous memory. Rerun quick test.

IGNB1 - Check IDM Signal at PCM Connector

^ Key OFF.

^ Install Rotunda Breakout Box 007-00033, or equivalent.

^ DVOM on AC volt scale.

^ Crank engine and measure voltage between BOB Pin 4 (1DM) and ground.

^ **Is voltage greater than 1.0 volt AC?**

YES -- Replace PCM. Remove all test equipment. Reconnect all components. Clear continuous memory. Rerun quick test.

NO -- GO to IGNB2. See: Pinpoint Tests/Manual Transmission/IGNB - Code 212; IDM Missing/IGNB2 - Check For 1DM Short to Power

IGNB2 - Check For 1DM Short to Power

^ Key OFF.

^ Connect TFI Diagnostic Cable 007-00097, or equivalent to PCM breakout box, connect BAT- lead to negative post of battery, and connect TFI module tee to vehicle harness.

^ DVOM on DC volt scale.

^ Key ON.

^ Measure voltage between Pin 23 (IDM) and Pin 7 (BAT-).

^ **Is voltage less than 0.5 volt DC?**

YES -- GO to IGNB3. See: Pinpoint Tests/Manual Transmission/IGNB - Code 212; IDM Missing/IGNB3 - Check For IDM Short to Ground

NO -- Service IDM short to power in harness between PCM connector and Ignition Control Module connector. Remove all test equipment. Reconnect all components. Clear continuous memory. Rerun quick test.

IGNB3 - Check For IDM Short to Ground

^ Key OFF.

^ Disconnect PCM.

^ DVOM on ohm scale.

^ Measure resistance between Pin 23 (IDM) and Pin 7 (BAT-).

^ **Is resistance greater than 10K ohms?**

YES -- GO to IGNB4. See: Pinpoint Tests/Manual Transmission/IGNB - Code 212; IDM Missing/IGNB4 - Check For IDM Open In Harness

NO -- Service IDM short to ground in harness between PCM connector and Ignition Control Module connector. Remove all test equipment. Reconnect all components. Clear continuous memory. Rerun quick test.

IGNB4 - Check For IDM Open In Harness

^ Disconnect PCM.

^ Measure resistance between Pin 23 (IDM) diagnostic cable and Pin 4 of the PCM connector.

^ **Is resistance less than 5.0 ohms?**

YES -- Replace Ignition Control Module. Remove all test equipment. Reconnect all components. Clear continuous memory. Rerun quick test.

NO -- Service IDM open in harness between Ignition Control Module and PCM connector. Remove all test equipment. Reconnect all components. Clear continuous memory. Rerun quick test.

IGNC1 - Check Base Timing

CAUTION: Do not use a remote starter while doing timing check.

^ Key OFF.

^ Install timing light.

^ Remove SPOUT in line connector.

^ Run engine at normal operating condition.

^ **Is base timing within ±3 degrees of specified base timing (10±1°)?**

YES -- GO to IGNC2. See: Pinpoint Tests/Manual Transmission/IGNC - Code 213; Timing Off/IGNC2 - Check For Spark Advance

NO -- Refer to ignition timing adjustment.

IGNC2 - Check For Spark Advance

^ Key OFF.

^ Reconnect SPOUT in line connector.

^ Idle engine at normal operating condition.

^ **Is timing greater than 18 degrees and does spark advance from base timing position?**

YES -- Not an ignition problem, refer to Diagnostic Routines.

NO -- GO to IGNC3. See: Pinpoint Tests/Manual Transmission/IGNC - Code 213; Timing Off/IGNC3 - Check For Good Spout to Ignition Control Module

IGNC3 - Check For Good Spout to Ignition Control Module

^ Connect Rotunda TFI Diagnostic Cable 007-00097, or equivalent, to Rotunda Breakout Box 007-00033, or equivalent, connect BAT- lead to negative post of battery, and connect Ignition Control Module and vehicle harness.

^ Turn switch on diagnostic cable to SPOUT OPEN.

^ Use TFI overlay on Breakout Box.

^ DVOM on AC volt scale.

^ Run engine and measure voltage between Pin 10 (SPOUT) and Pin 7 (BAT-).

^ **Is voltage between 3.0 and 8.5 volts AC?**

YES -- Replace Ignition Control Module. Remove all test equipment. Reconnect all components. Clear continuous memory. Rerun quick test.

NO -- GO to IGNC4. See: Pinpoint Tests/Manual Transmission/IGNC - Code 213; Timing Off/IGNC4 - Check For Spout Open In Harness

IGNC4 - Check For Spout Open In Harness

^ Key OFF.

^ Disconnect PCM.

^ Disconnect diagnostic cable TFI module tee from Ignition Control Module only; leave TFI module tee connected to vehicle harness.

^ DVOM on ohm scale.

^ Measure resistance between Pin 36 (SPOUT) of the PCM vehicle harness connector and Pin 10 (SPOUT) at the breakout box.

^ **Is resistance less than 5.0 ohms?**

YES -- Replace PCM. Remove all test equipment. Reconnect all components. Clear continuous memory. Rerun quick test.

NO -- Service SPOUT open in harness between PCM and Ignition Control Module. Remove all test equipment. Reconnect all components. Clear continuous memory. Rerun quick test.

IGND1 - Find Symptoms

^ Talk to customer and develope a list of symptoms.

IGND2 - Review Vehicle History

^ Review vehicle service history and note number of previous repairs and components replaced.

IGND3 - Test Equipment

^ **Is a Rotunda TFI/EEC-IV Intermittent Ignition Analyzer 007-00035 or equivalent available?**

NOTE: The TFI-IV intermittent analyzer cannot be used with TFI-IV modules with Computer Controlled Dwell (CCD) unless a CCD update is added to the analyzer.

YES -- Follow test procedure instructions supplied with tester.

NO -- GO to IGND4. See: Pinpoint Tests/Manual Transmission/IGND - Intermittent Miss or Stall/IGND4 - Begin Diagnosis

IGND4 - Begin Diagnosis

^ **Will engine start?**

YES -- GO to IGND5. See: Pinpoint Tests/Manual Transmission/IGND - Intermittent Miss or Stall/IGND5 - Cold Wiggle Test

NO -- GO to IGNA1. See: Pinpoint Tests/Manual Transmission/IGNA - Engine No Start/IGNA1 - Check For EEC IV Quick Test Completion

IGND5 - Cold Wiggle Test

^ Engine at idle, raise hood, shake wiring harness and pull wires at connectors for ignition components.

^ **Does engine quit?**

YES -- Service wiring harness or connector.

NO -- GO to IGND6. See: Pinpoint Tests/Manual Transmission/IGND - Intermittent Miss or Stall/IGND6 - Engine Warm-Up

IGND6 - Engine Warm-Up

^ Engine at idle, close hood, A/C ON, blower on medium speed: allow engine to run for 15 minutes.

^ **Does engine quit?**

YES -- GO to IGND10. See: Pinpoint Tests/Manual Transmission/IGND - Intermittent Miss or Stall/IGND10 - Final Test

NO -- GO to IGND7. See: Pinpoint Tests/Manual Transmission/IGND - Intermittent Miss or Stall/IGND7 - Hot Restart Test

IGND7 - Hot Restart Test

^ Engine off, hood closed, hot soak for 10 minutes.

^ **Will engine restart?**

YES -- GO to IGND8. See: Pinpoint Tests/Manual Transmission/IGND - Intermittent Miss or Stall/IGND8 - Hot Wiggle Test

NO -- GO to IGNA1. See: Pinpoint Tests/Manual Transmission/IGNA - Engine No Start/IGNA1 - Check For EEC IV Quick Test Completion

IGND8 - Hot Wiggle Test

^ Engine at idle, raise hood, shake wiring harness and pull wires at connectors for ignition components.

^ **Does engine quit?**

YES -- Service wiring harness or connector.

NO -- GO to IGND9. See: Pinpoint Tests/Manual Transmission/IGND - Intermittent Miss or Stall/IGND9 - Road Test

IGND9 - Road Test

^ Road test.

^ **Does engine quit?**

YES -- GO to IGND10. See: Pinpoint Tests/Manual Transmission/IGND - Intermittent Miss or Stall/IGND10 - Final Test

NO -- Test complete (Problem not duplicated).

IGND10 - Final Test

^ Raise hood, shake wiring harness, pull wires at connectors, separate and reconnect connectors for ignition components.

^ **Does engine start?**

YES -- Service wiring harness or connector.

NO -- GO to IGNA1. See: Pinpoint Tests/Manual Transmission/IGNA - Engine No Start/IGNA1 - Check For EEC IV Quick Test Completion

TEST STEP	RESULT ▶	ACTION TO TAKE
TEST A SECONDARY DISPLAY		
• Is the eveness of spark plug firing voltage and the average value of spark plug firing voltage: normal and stable? 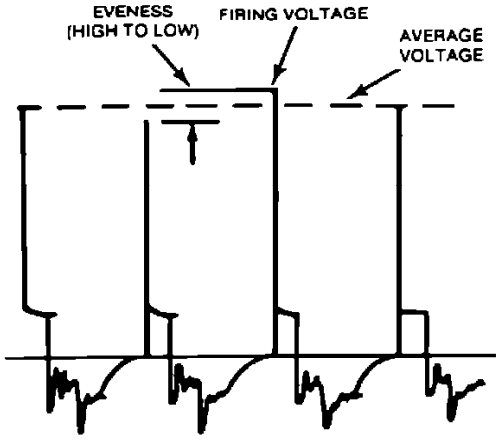	Yes ▶	These are normal values for a properly operating ignition system.
	No ▶	GO to SECONDARY DISPLAY TEST B.

Secondary Display

TEST STEP	RESULT ▶	ACTION TO TAKE
TEST B SECONDARY DISPLAY		
• Is the eveness of spark plug firing voltage too wide and the average value of spark plug firing voltage greater than normal? 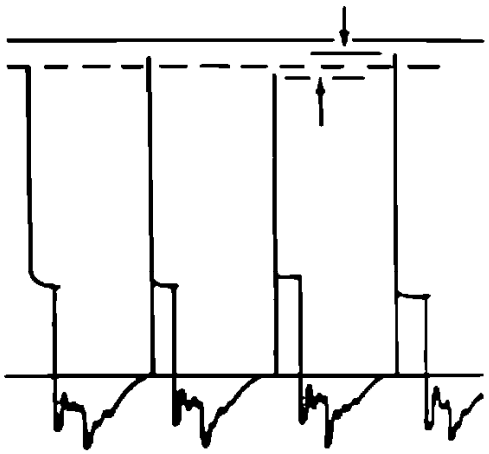	Yes ▶	Problems affecting all cylinders: — CHECK coil wire for proper installation in coil and distributor cap. — Wide spark plug gaps at all cylinders, (usually from worn electrodes due to high mileage). — INSPECT cap and rotor for problems causing excessive cap-to-rotor gap. — INSPECT cap and rotor for lack of silicone compound (blade rotor only) — **GO to SPARK PLUG WIRE RESISTANCE.**
	No ▶	**GO to SECONDARY DISPLAY TEST C.**

Secondary Display

TEST STEP	RESULT	ACTION TO TAKE
TEST C SECONDARY DISPLAY		
• Is the eveness of spark plug firing voltage greater than normal? 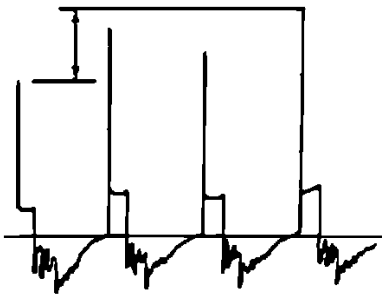	Yes ▶	Problems affecting some cylinders: — Wide spark plug gap(s) or worn electrode(s). — Improperly installed cap or rotor.
	No ▶	**GO to SECONDARY DISPLAY TEST D.**

Secondary Display

TEST STEP	RESULT ▶	ACTION TO TAKE
TEST D SECONDARY DISPLAY		
• Is there consistently high spark plug firing voltage in one or more cylinders? 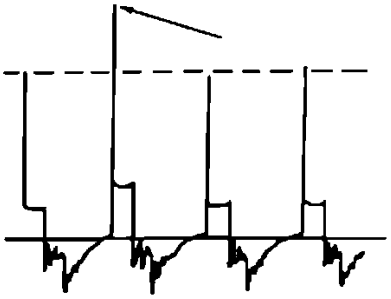	Yes ▶	Check if: — Spark plug wire(s) are firmly connected to distributor cap or spark plug. — Wide spark plug gap(s). — Open plug wire(s). — **GO to SPARK PLUG WIRE RESISTANCE.**
	No ▶	**GO to SECONDARY DISPLAY TEST E.**

Secondary Display

TEST STEP	RESULT	ACTION TO TAKE
TEST E SECONDARY DISPLAY		
Is there consistently low spark plug firing voltage or slopping spark line in one or more cylinders? 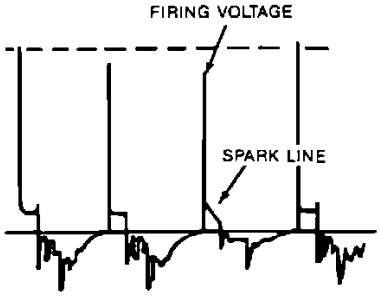	Yes ▶	— Fouled spark plug(s). — Narrow spark plug gap(s). — Spark plug wire(s) grounding on engine. INSPECT for damage. — Carbon tracking in cap.
	No ▶	**GO to SECONDARY DISPLAY TEST F.**

Secondary Display

TEST STEP	RESULT	ACTION TO TAKE
TEST F SECONDARY DISPLAY		
• Is spark plug firing voltage reversed? 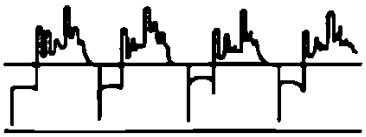	Yes ▶	— Ignition coil primary circuit reversed. — CHECK wiring harness for ignition coil primary circuit. If OK, REPLACE ignition coil
	No ▶	**GO to SPARK PLUG WIRE RESISTANCE.**

Secondary Display

TEST STEP	RESULT ▶	ACTION TO TAKE
TEST A SECONDARY DISPLAY		
• Is the eveness of spark plug firing voltage and the average value of spark plug firing voltage: normal and stable? 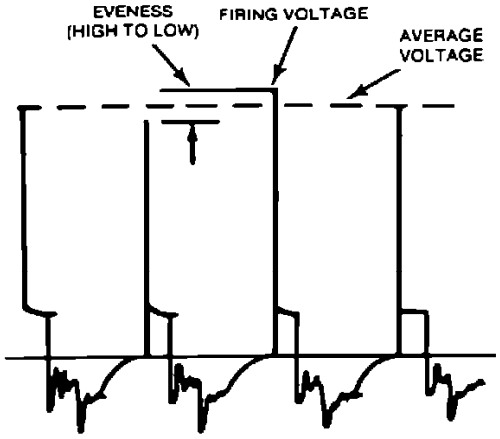	Yes ▶	These are normal values for a properly operating ignition system.
	No ▶	GO to SECONDARY DISPLAY TEST B.

Secondary Display

TEST STEP	RESULT ▶	ACTION TO TAKE
TEST B SECONDARY DISPLAY		
• Is the eveness of spark plug firing voltage too wide and the average value of spark plug firing voltage greater than normal? 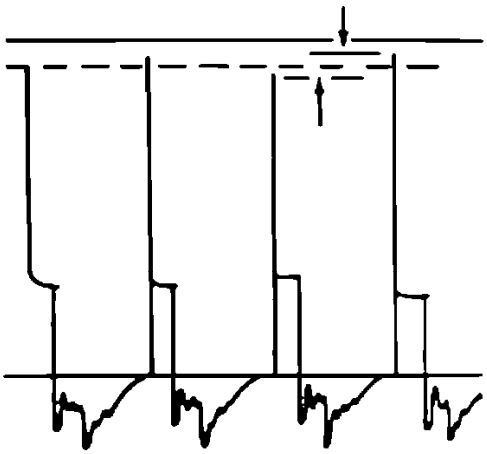	Yes ▶	Problems affecting all cylinders: — CHECK coil wire for proper installation in coil and distributor cap. — Wide spark plug gaps at all cylinders, (usually from worn electrodes due to high mileage). — INSPECT cap and rotor for problems causing excessive cap-to-rotor gap. — INSPECT cap and rotor for lack of silicone compound (blade rotor only) — **GO to SPARK PLUG WIRE RESISTANCE.**
	No ▶	**GO to SECONDARY DISPLAY TEST C.**

Secondary Display

TEST STEP	RESULT	ACTION TO TAKE
TEST C SECONDARY DISPLAY		
• Is the eveness of spark plug firing voltage greater than normal? 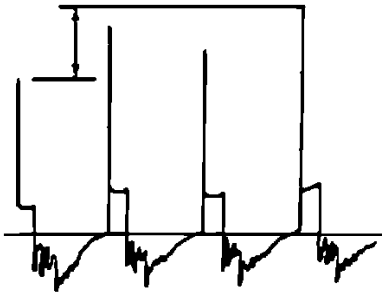	Yes ▶	Problems affecting some cylinders: — Wide spark plug gap(s) or worn electrode(s). — Improperly installed cap or rotor.
	No ▶	**GO to SECONDARY DISPLAY TEST D.**

Secondary Display

TEST STEP	RESULT ▶	ACTION TO TAKE
TEST D SECONDARY DISPLAY		
• Is there consistently high spark plug firing voltage in one or more cylinders? 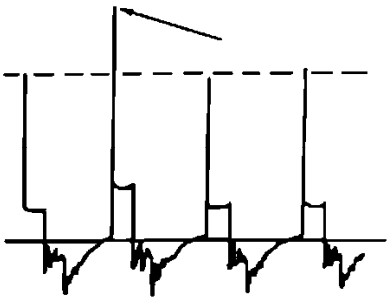	Yes ▶	Check if: — Spark plug wire(s) are firmly connected to distributor cap or spark plug. — Wide spark plug gap(s). — Open plug wire(s). — **GO to SPARK PLUG WIRE RESISTANCE.**
	No ▶	**GO to SECONDARY DISPLAY TEST E.**

Secondary Display

TEST STEP	RESULT	ACTION TO TAKE
TEST E SECONDARY DISPLAY		
Is there consistently low spark plug firing voltage or slopping spark line in one or more cylinders? 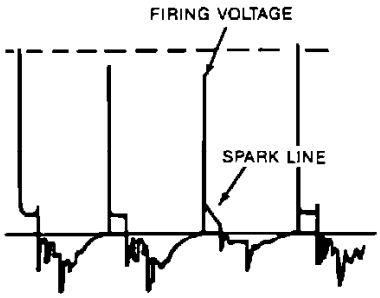	Yes ▶	— Fouled spark plug(s). — Narrow spark plug gap(s). — Spark plug wire(s) grounding on engine. INSPECT for damage. — Carbon tracking in cap.
	No ▶	**GO to SECONDARY DISPLAY TEST F.**

Secondary Display

TEST STEP	RESULT	ACTION TO TAKE
TEST F SECONDARY DISPLAY		
• Is spark plug firing voltage reversed? 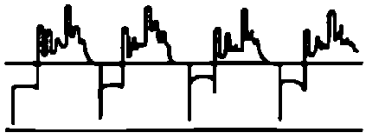	Yes ▶	— Ignition coil primary circuit reversed. — CHECK wiring harness for ignition coil primary circuit. If OK, REPLACE ignition coil
	No ▶	**GO to SPARK PLUG WIRE RESISTANCE.**

Secondary Display

Firing Order: Specifications

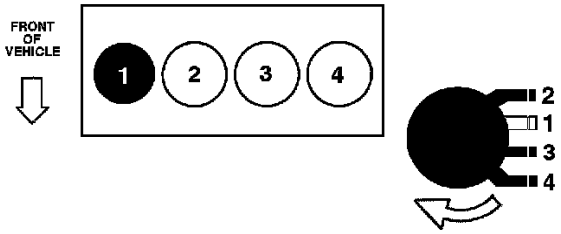

4-Cyl Firing Order: 1 3 4 2

Ignition Timing: Adjustments
Automatic Transmission

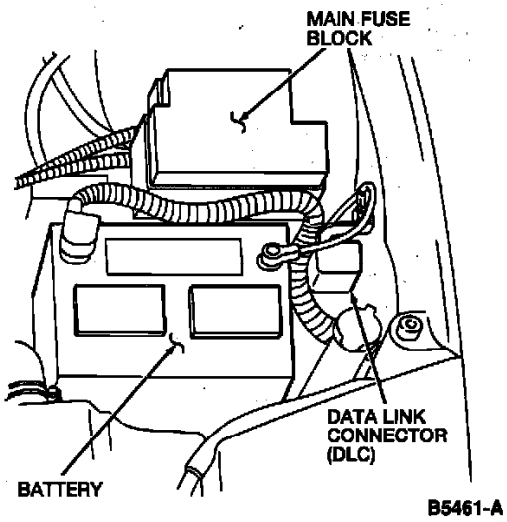

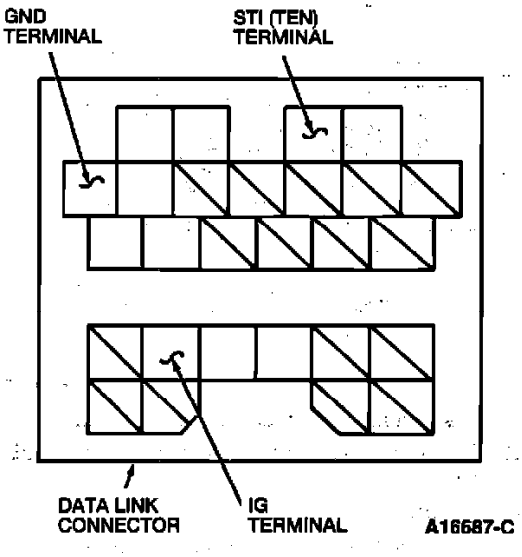

Data Link Connector

1. Warm engine to operating temperature.
2. Turn all electrical loads "OFF."
3. Connect Rotunda Digital Tachometer (059-00007), or equivalent.
4. Connect timing light.
5. Connect Data Link Connector terminals STI (TEN) and GND with jumper wire.
6. Verify correct idle speed. Adjust if needed:

   IDLE SPEED: 700 ± 50 rpm

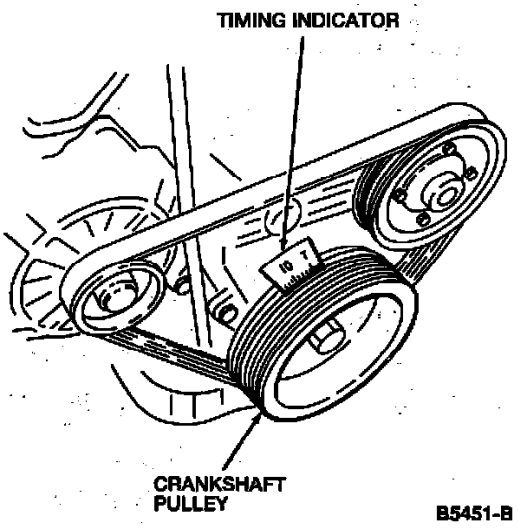

Timing Marks

7. Check timing:

   TIMING: 12° ± 1° BTDC

8. If not correct, loosen hold-down bolts and turn distributor to adjust.
9. Tighten hold-down bolts:

   TORQUE:14 - 18 ft lb (19 - 25 Nm)

10. Remove test equipment and jumper wire.

Ignition Timing Connector: Description and Operation

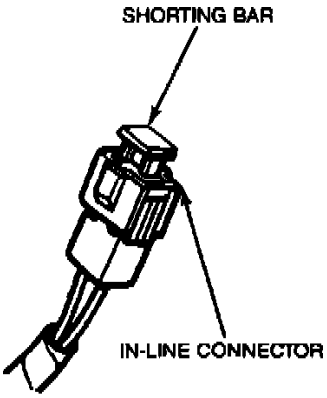

In-line Connector With Shorting Bar

PURPOSE
The octane adjustment switch is used to retard the ignition timing approximately three degrees to reduce detonation due to use of lower grade fuels.

OPERATION
When the switch jumper is INSTALLED, the computed timing is normal. With the jumper REMOVED, the timing computed is retarded approximately three degrees. This is done to allow for optimum spark advance for effective combustion of the air/fuel mixture.

1993 Ford Probe L4-121 2.0L DOHC VIN A MFI

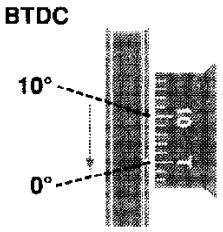

Calibration Resistor / Connector: Description and Operation

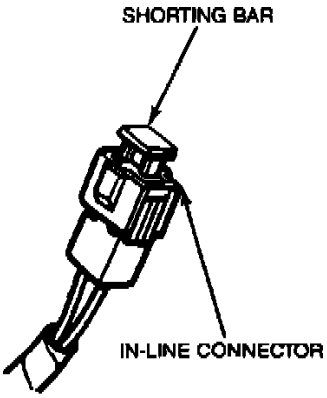

In-line Connector With Shorting Bar

PURPOSE
The octane adjustment switch is used to retard the ignition timing three to four degrees.

OPERATION
When the switch jumper is INSTALLED, the timing is normal. With the jumper "REMOVED", the timing is retarded. This is done to allow for optimum spark advance for effective combustion of the air/fuel mixture.

Crankshaft Position Sensor: Description and Operation
Manual Transmission

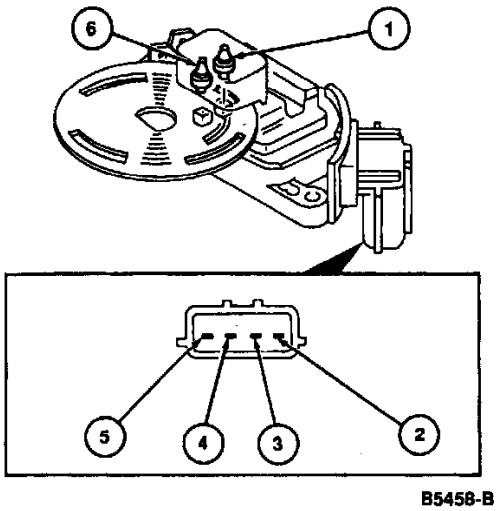

Item	Part Number	Description
1	—	Crankshaft Position (CKP) Sensor
2	—	Ground
3	—	Battery
4	—	Crankshaft Position (CKP) Sensor Signal
5	—	Camshaft Position (CMP) Sensor Signal
6	—	Camshaft Position (CMP) Sensor

Camshaft/Crankshaft Position Sensor

PURPOSE

The Crankshaft Position **(CKP)** sensor determines engine speed and crankshaft position and supplies this information as an input signal to the Ignition Control Module **(ICM)** and Powertrain Control Module **(PCM)**.

CONSTRUCTION

The CKP is a dual photodiode type sensor located within the distributor. It cannot be replaced separately and must be serviced as part of the distributor.

OPERATION

A slotted disc is mounted to the distributor shaft. There are 4 slots cut into the disc, each one corresponding to a cylinder on its compression stroke. As the shaft rotates each slot allows light from a photodiode to strike a photo transistor. The CKP sensor then creates a which is sent to the PCM.

Distributor: Description and Operation

PURPOSE

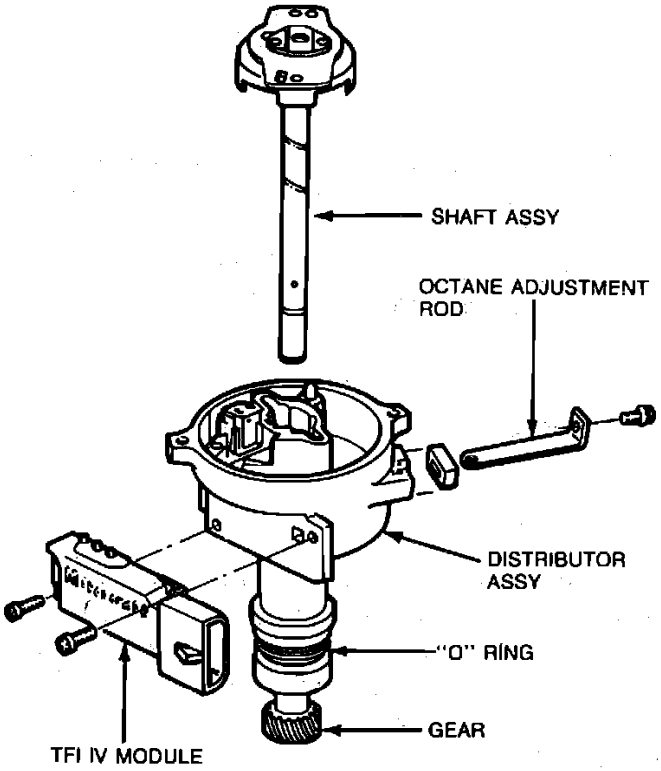

Distributor (Typical) - Exploded View

The distributor directs secondary high voltage to the spark plugs. The Hall effect Profile Ignition Pick-up **(PIP)** sensor provides base timing information and engine speed and position.

CONSTRUCTION

The gear driven distributor is die cast aluminum. The components of the distributor include:

- Hall effect PIP sensor (stator)
- ferrous metal rotary vane cup (armature)
- shaft assembly
- octane rod
- ignition module.

OPERATION

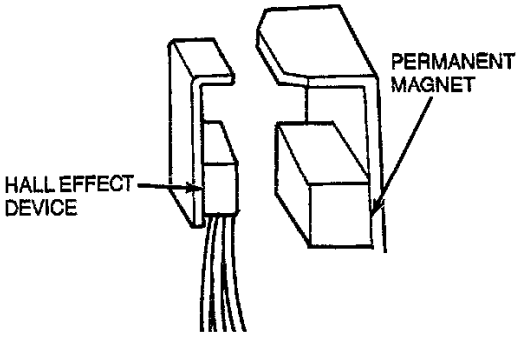

Hall Effect Device

The distributor uses a Hall effect (PIP) switch assembly, causing the ignition coil to be switched OFF and ON by the TFI and Electronic Engine Control **(EEC)** modules.

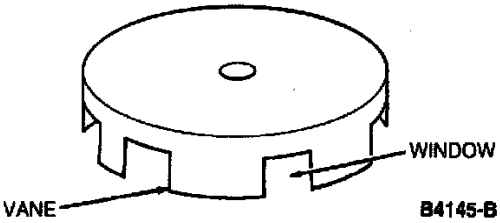

Rotary Vane Cup

As the window of the vane cup is between the magnet and the Hall Effect device, a magnetic field is completed.

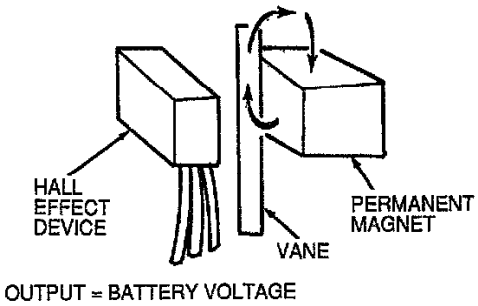

Hall Effect Device Response To Vane

As the vane passes through this opening, the flux lines are shunted through the vane and back to the magnet and voltage is produced.

As the vane clears the opening, the window edge causes the signal to drop to zero volts.

This signals crankshaft position and desired spark advance based on engine demand and calibration.

Secondary voltage distribution is accomplished through a rotor, cap and ignition wires.

The octane rod adds a provision for a fixed octane adjustment. This is done only if the engine is experiencing a pinging or engine knocking condition and can not be repaired with the conventional methods (timing adjusted, proper operating temperature, higher gasoline octane rating .... etc.).

Distributor: Service and Repair
Manual Transaxle

REMOVAL

1. Disconnect battery ground cable.
2. Disconnect the distributor electrical connector.
3. Remove the two screws and remove the distributor cap. Position the distributor cap and spark plug wire set out of the way.
4. Rotate engine until the No.1 piston is at TDC on the compression stroke.
5. Remove the distributor hold-down bolt.
6. Remove distributor.

INSTALLATION

1. Match the alignment marks on the distributor shaft and distributor housing.
2. Apply engine oil to the O-ring on the distributor.
3. Install the distributor while making sure to engage the drive gear into the camshaft distributor drive gear.
4. Ensure the distributor rotor points to No 1 wire tower. If the distributor rotor is misaligned, pull the distributor out and rotate the distributor shaft to the next tooth. Repeat this step until the distributor rotor is aligned with the No.1 wire tower.
5. Install the distributor cap and screws.
6. Connect the distributor electrical connector.
7. Temporarily tighten the distributor hold-down bolt.
8. Connect the negative battery cable.
9. Adjust the ignition timing.
10. Tighten the hold-down bolt to **14-18 ft. lb. (19-25 N-m).**

Distributor: Service and Repair
Transistorized High Energy System

REMOVAL

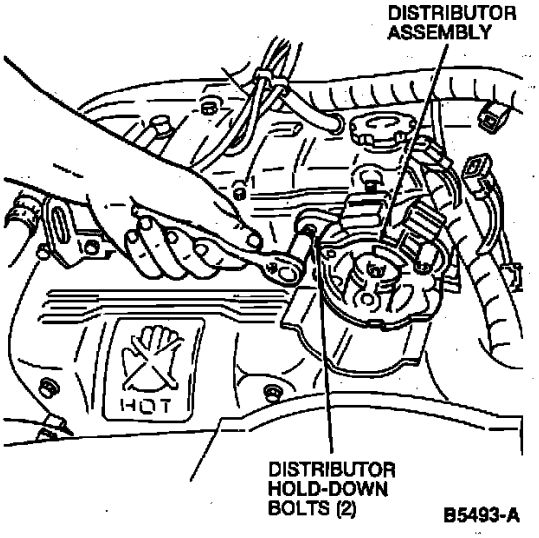

Distributor R&R

1. Disconnect battery negative cable.
2. Unplug distributor and coil electrical connectors.
3. Remove attaching screws and distributor cap; position cap and wires out of the way.
4. Rotate engine to #1 cylinder TDC firing.
5. Remove distributor hold-down bolts; lift distributor from engine.

INSTALLATION

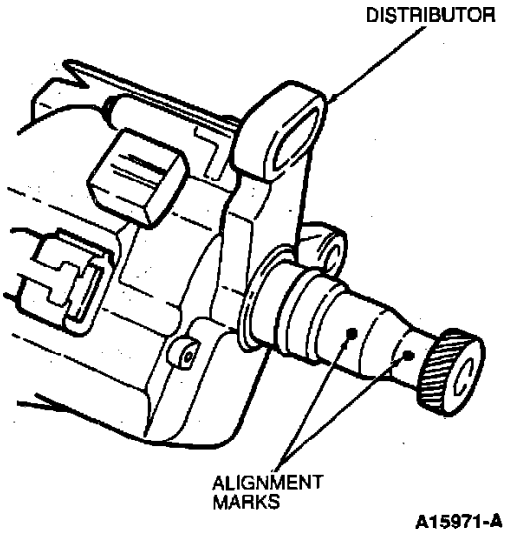

Distributor Alignment Marks

1. Match alignment marks on distributor shaft and housing.
2. Apply oil to O-ring.
3. Install distributor, ensuring that distributor and camshaft gears engage.
4. Ensure that rotor points to #1 wire tower. If not, pull distributor out and rotate shaft one tooth. Repeat this step until rotor is aligned with #1 wire tower.
5. Install distributor cap and plug in connectors for distributor and coil.
6. Install and temporarily tighten hold-down bolts.
7. Connect negative battery cable.
8. Adjust timing.
9. Tighten hold-down bolts:

   TORQUE:14 - 18 ft lb (19 - 25 Nm)

Hall Effect Sensor: Description and Operation

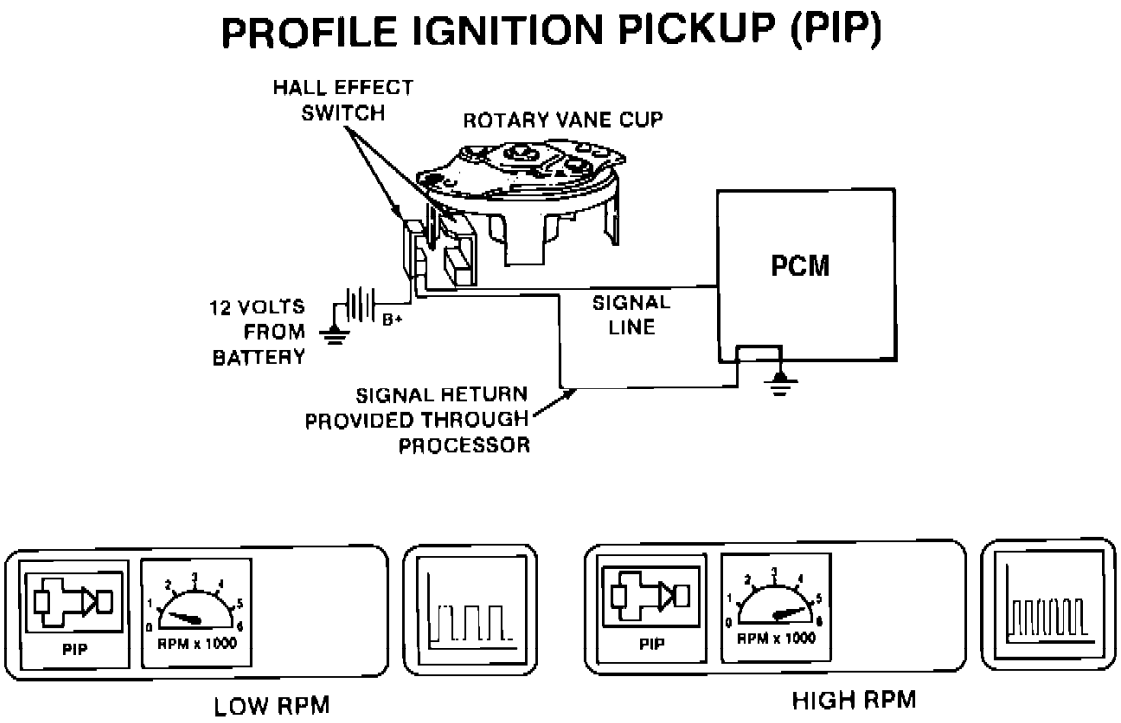

Profile Ignition Pickup

The Profile Ignition Pickup (PIP) sensor is a Hall-effect type switch located in the distributor. It sends the Powertrain Control Module (PCM) information on engine speed and crankshaft position.

The Hall device operates by the manipulation of magnetic fields. When a rotor vane ENTERS the space between the two halves of the stator pick-up, the magnetic field is altered, turning ON the signal to the PCM. When the vane LEAVES the stator gap, the magnetic field returns to normal, and the signal to the PCM is turned OFF.

Ignition Control Module: Description and Operation

PURPOSE

The Thick Film Integrated **(TFI)** ignition module supplies spark to the distributor through the ignition coil and calculates the duration. It receives its control signal from the Electronic Control Assembly **(ECA)** Spark Output **(SPOUT)**.

CONSTRUCTION

The ignition control module is a thick film integrated design. The module contains a ceramic substrate thick film assembly and three output drivers mounted on a metal base plate and potted in a plastic housing.

OPERATION

The ignition module has six connector pins at the wiring harness that supplies the following signals:

- Run
- Crank (start)
- Tach (coil)
- PIP (crankshaft position to ECA)
- Spark output (SPOUT from ECA)
- Internal ground from the ECA to the distributor

OPERATION

The TFI module receives the PIP signal from the crankshaft sensor, the CID signal from the camshaft sensor, and Spark Output **(SPOUT)** signal from the ECA. During normal operation, PIP is sent to the ECA from the crankshaft timing sensor and provides base timing and RPM information. The CID signal provides the ignition control module with the information required to synchronize the ignition coils so that they are fired in proper sequence. The SPOUT signal contains optimum spark timing and dwell time information. Spark angle is determined by the rising edge of SPOUT, while the falling edge of SPOUT controls the coil current "ON" or "DWELL" time. The dwell time is controlled or varied by varying the duty cycle of the SPOUT signal. This feature is called Computer Controlled Dwell **(CCD)**.

TO TEST	Connect Self-Powered Test Lamp or Ohmmeter to Terminals	Move Switch to These Positions	A Good Switch Will Indicate
Starter Circuit	B2 (1 BK/BL) *and* START (11 BK/Y)	Lock, Acc, Run and Start	Closed Circuit in START position
ACC Circuit	B1 (1 BK/BL) *and* ACC (3 BL/Y)	Lock, Acc, Run and Start	Closed Circuit in ACC and RUN positions
IG1 Circuit	B1 (1 BK/BL) *and* IG1 (2 BK/PK)	Lock, Acc, Run and Start	Closed Circuit in RUN and START positions
IG2 Circuit	B2 (1 BK/BL) *and* IG2 (5 BK/R)	Lock, Acc, Run and Start	Closed Circuit in RUN position
Internal Connections	B1 *and* B2	Lock, Acc, Run and Start	Closed Circuit in all positions
Ignition Key Reminder Circuit	K1 *and* K2	Key In and Key Out	Closed Circuit with key in ignition

Component Testing Procedure

Spark Plug: Specifications

Spark Plug Gap

SPARK PLUG

Plug Type	AGSP-32C
Electrode Gap	0.039-0.043 in (1.0-1.1 mm)

Fuel Delivery and Air Induction: Description and Operation

PURPOSE

Fuel Delivery

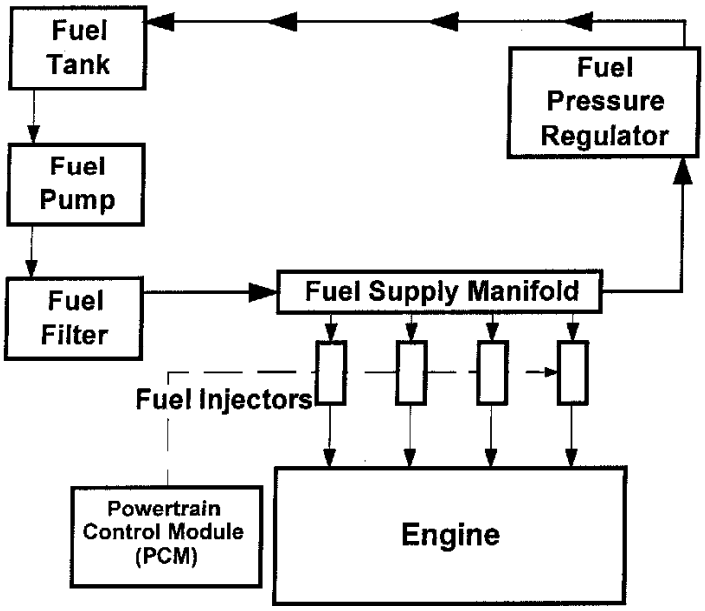

Fuel Delivery System

The Sequential Fuel Injection **(SFI)** delivers correct air/fuel mixture to the engine at the precise time throughout its entire RPM range and under all operating conditions.

Air Induction

The air induction system filters, controls, silences and delivers fresh air to the engine.

OPERATION

Fuel Delivery

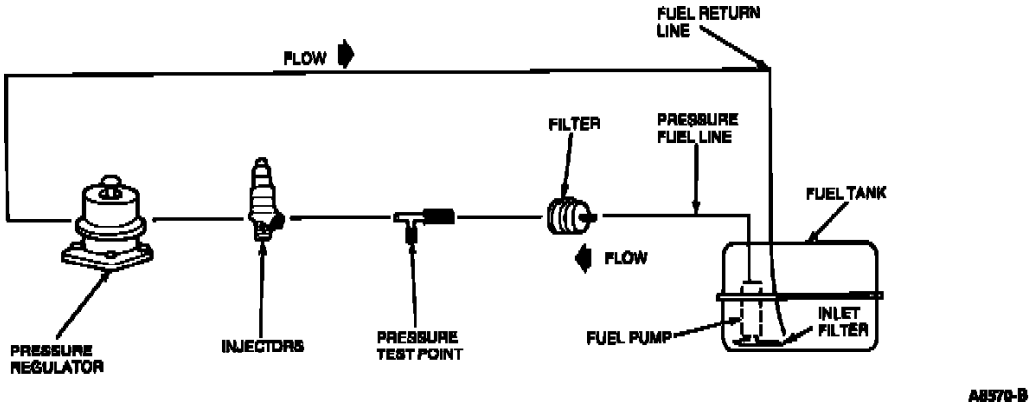

Fuel Delivery System Schematic

A high-pressure in-tank mounted fuel pump delivers fuel to the fuel injection supply manifold. The fuel injection supply manifold incorporates electrically actuated fuel injectors mounted directly above each of the engine's intake ports.

Fuel pressure across the injectors is maintained by a pressure regulator. Because fuel pressure is a constant while fuel demand is not, the system includes a fuel return line that allows excess fuel to flow through the regulator to the fuel tank.

The amount of fuel the injectors will spray under a particular operating condition is determined by a Powertrain Control Module **(PCM)**. This assembly receives electrical signals from sensors that monitor factors such as airflow pressure and temperature to the engine, engine coolant temperature, throttle position, vehicle speed, etc. The PCM evaluates the sensor information and signals the fuel injectors, controlling injector pulse width.

Air Induction

Air enters the system through the fresh air duct and flows through the air cleaner and is monitored by the Mass Air Flow **(MAF)** sensor. The metered air passes through the air duct and enters the throttle body. From the throttle body, the air passes through the intake plenum to the intake manifold, where it is mixed with fuel for combustion.

Fuel Delivery and Air Induction: Symptom Related Diagnostic Procedures

Diagnostic Notes

Diagnosis by Symptom is used to find the correct test procedure for a given symptom. Possible Cause and Actions within this section are "Fuel Related" only. Verify correct system application to ensure that vehicle has the given component. Always use **Flow of Diagnosis** for proper testing sequence.

ALCOHOL-IN-FUEL

- Alcohol-in-fuel can be detrimental to fuel system components and may cause driveability problems such as hesitation, lack of power, stall, no start, etc.
- Problems may be due to fuel system corrosion and subsequent fuel filter plugging, deterioration of rubber components and/or air/fuel mixture leaning.
- Various types and concentrations of alcohols are used in commercial fuel; some are more detrimental to fuel system components than others. If an excessive amount of alcohol in the fuel system is suspected as the cause of a driveability condition, refer to **Alcohol-In-Fuel Test**. See: Fuel/Testing and Inspection

FUEL TYPES

Methyl Tertiary-Butyl Ether (MTBE)
Fuel containing Methyl Tertiary-Butyl Ether (MTBE) may be used if there is no more than 15% alcohol by volume.

Ethanol
Fuel containing ethanol (ethyl or grain alcohol) may be used if there is no more than 10% ethanol by volume.

Methanol
Fuel containing methanol (methyl or wood alcohol) may be used if there is no more than 5% methanol by volume. Use of fuel (gasohol) that contains more than 5% methanol can corrode metal fuel system components and damage plastic and rubber parts.

PRE-CHECKS:

1. Check for adequate fuel supply in fuel tank. Do not rely on fuel gauge!
2. Verify battery is fully charged.
3. Verify fuse/fuse link integrity.
4. Inspect all hoses, fuel lines, and connections for fuel leaks, kinks and proper routing.
5. Verify correct fuel type and quality.
6. Check TSB's for fuel system design updates.

Cranks Normally But Won't Start

Definition: Engine cranks OK, but does not start. May fire a few times.

POSSIBLE CAUSE	ACTION
No fuel in tank	- Put fuel in fuel tank
Water contaminated fuel	- Drain fuel tank and add clean fuel
Low fuel pressure	- Check fuel pressure, refer to Fuel Pressure Test
Pinched or collapsed fuel hose/line	- Repair/replace as required
Inoperative fuel pump	- Verify fuse/fuse link integrity - Check fuel pump relay, refer to Fuel Delivery Diagnosis See: Pinpoint Tests

Detonation/Spark Knock

Definition: A mild to severe ping, usually worse under acceleration. The engine makes sharp metallic knocks that change with throttle opening.

POSSIBLE CAUSE	ACTION

Lean operating condition	- Check computer controls, refer to Computers And Control Systems / Testing and Inspection
Poor or contaminated fuel	- Check for excessive alcohol content, See: Fuel/Testing and Inspection - Recommend higher grade fuel
Incorrect fuel pressure	- Refer to Fuel Delivery Diagnosis, See: Pinpoint Tests
Vacuum leak	- Inspect vacuum hoses for proper routing and damaged lines

Excessive Emissions or Odors

Definition: Vehicle fails an emission test. Vehicle has excessive "rotten egg" smell. Excessive odors do not necessarily indicate excessive emissions.

POSSIBLE CAUSE	ACTION
Incorrect idle speed	- Check and adjust idle speed, refer to Adjustments
Fuel in crankcase	- Determine cause (flooding, excessive cranking etc.) - Change oil and filter
Fuel Metering	- Check fuel pressure, - Check air/fuel ratio (O2 Sensor Voltage) - Perform Injector Balance Test - Check vacuum line and return hose
Faulty fuel cap	- Replace fuel cap
Lead contamination of catalytic converter	- Check for missing fill pipe restrictor - Replace catalytic converter
Poor or contaminated fuel	- Check for excessive alcohol content - Recommend higher grade fuel - Drain fuel tank and add clean fuel

Hesitates or Stalls On Acceleration

Definition: Momentary lack of response as the accelerator is pushed down, can occur at any vehicle speed. Usually most severe when first trying to make the vehicle move, as from a stop sign. May cause the vehicle to stall if severe enough.

POSSIBLE CAUSE	ACTION
Poor or contaminated fuel	- Check for excessive alcohol content, See: Fuel/Testing and Inspection - Recommend higher grade fuel
Fuel Metering	- Check fuel pressure, - Check air/fuel ratio - Perform Injector Balance Test - Perform injector service

Lack of Power, Sluggish

Definition: Engine delivers less than expected power. Little or no increase in speed, when accelerator pedal is pushed down part way.

POSSIBLE CAUSE	ACTION
Contaminated fuel	- Check for water or excessive alcohol in fuel, See: Fuel/Testing and Inspection - Drain fuel tank and add clean fuel
Lead contaminated catalytic converter	- Check for missing fill pipe restrictor - Replace catalytic converter

Low fuel pressure	- Check fuel pressure,
Pinched or collapsed fuel hose/line	- Repair/replace as required
Throttle valve not fully opening	- Check accelerator pedal travel (Floor mat/carpet interference) - Check throttle cable adjustment
Dirty air filter	- Clean or replace

Misses Under Load

Definition: Steady pulsation or jerking that follows engine speed, usually more pronounced as engine load increases. The exhaust has a steady spitting sound at idle or low speed.

POSSIBLE CAUSE	ACTION
Contaminated fuel	- Drain fuel tank and add clean fuel
Restricted fuel filter/line	- Replace filter/repair restricted line
Low fuel pressure	- Test fuel pressure,
Fuel Metering	- Plugged fuel injectors, perform Injector Balance Test - Perform injector service

Poor Fuel Economy

Definition: Fuel economy, as measured by an actual road test, is noticeably lower than expected. Also, economy is noticeably lower than it was on this car at one time, as previously shown by an actual road test.

POSSIBLE CAUSE	ACTION
Dirty air filter	- Clean or replace
Fuel Metering	- Check fuel pressure, - Check air/fuel ratio - Perform Injector Balance Test - Check vacuum line and return hose
Speedometer inaccurate	- Check speedometer calibration

Rough, Unstable or Incorrect Idle; Stalling

Definition: The engine runs unevenly at idle. If bad enough, the vehicle may shake. Also, the idle may vary in rpm. Either condition may be severe enough to cause stalling. Engine idles at incorrect speed.

POSSIBLE CAUSE	ACTION
Throttle linkage sticking/binding	- Check and adjust throttle linkage
Fuel Metering	- Check fuel pressure, - Check air/fuel ratio - Perform Cylinder Balance Test - Check vacuum line and return hose
Incorrect idle speed	- Check and adjust, refer to Adjustments

Surges at Steady Speed

Definition: Engine power variation under steady throttle or cruise. Feels like the car speeds up and slows down with no change in accelerator pedal.

POSSIBLE CAUSE	ACTION
Insufficient fuel capacity	- Check fuel capacity
Faulty fuel pressure regulator	- Check fuel pressure,
Contaminated fuel	- Check for water or excessive alcohol in fuel - Drain fuel tank and add clean fuel
Dirty fuel filter	- Replace fuel filter
Lean operating condition	- Check computer controls, refer to Computers and Control Systems
Vacuum leak	- Inspect vacuum hoses for proper routing and damaged lines - Check intake manifold and throttle body base

Fuel Delivery and Air Induction: Pinpoint Tests

System Inspection

1. Visually inspect fuel system components for:
   - Loose, leaking, or damaged fuel or vacuum lines
   - Leaking fuel injectors
   - Adverse driveability symptoms such as rough idle, hard to start, misses, surges, hesitates, backfires
   - Insufficient fuel in tank
   - Discharged battery
   - Damaged connectors
   - Damaged insulation
   - Damaged fuel system components
   - Fuse integrity
   - Tripped inertia fuel shutoff switch

2. Exercise wiring and connectors for solenoids and other electrical components. Check for obvious problems due to looseness, corrosion, or other damage.
3. If a component is suspected as the obvious cause of a malfunction, correct the cause before proceeding to the next step.
4. If all checks are okay, proceed to Pinpoint Tests.

F1 - Fuel Pressure Test

WARNING: Before starting these tests, release the fuel pressure from the fuel system to reduce the risk of injury or fire, as outlined in **Service Precautions**.

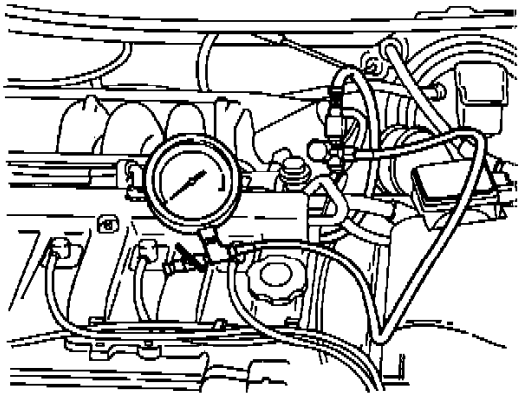

Fuel Pressure Gauge Hook-up

- After releasing the fuel pressure, install Rotunda Fuel Pressure Tester 014-00748 or equivalent with EFI Test Adapter D870-9974-A in the fuel line between the fuel filter and the fuel rail, with its main valve open and its drain valve closed.

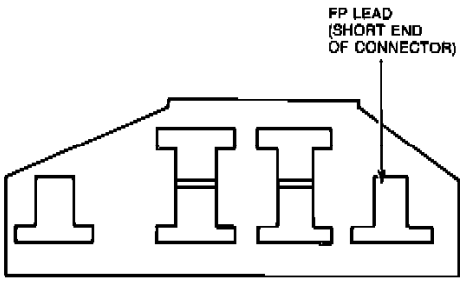

STO Connector

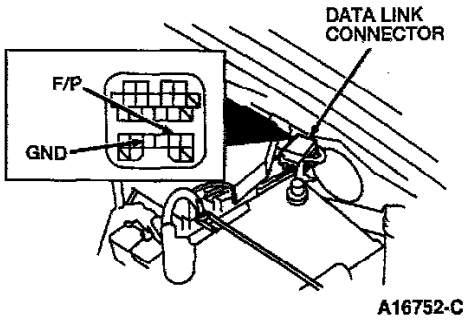

Fuel Pump Test Connector

- Jump the fuel pump test terminal to ground.
- Key On.
- **Is the fuel pressure within specification?**

  YES -- Go to FD1. See: Fuel System Diagnosis/FD - Fuel Injector Test/FD1 - Fuel Injector Function Check

  NO -- (If zero) Go to FA1. See: Fuel System Diagnosis/FA - No Fuel Pressure Test/FA1 - Check Voltage to Fuel Pump

  (If low) -- Go to FB1. See: Fuel System Diagnosis/FB - Low Fuel Pressure Test/FB1 - Power Supply to Fuel Pump

  (If high) -- Go to FC1. See: Fuel System Diagnosis/FC - High Fuel Pressure Test/FC1 - Check Fuel Pressure Regulator For High Pressure

FA1 - Check Voltage to Fuel Pump

- Key Off.
- Jump the fuel pump test terminal to ground. For terminal locations, refer to Test Step F1.
- Disconnect the fuel pump connector at the fuel pump assembly.
- Key On.
- Measure the voltage on the BK/W wire at the fuel pump connector.
- **Is the voltage between 10.0-14.0 volts?**

  YES -- Go to FA9. See: Fuel System Diagnosis/FA - No Fuel Pressure Test/FA9 - Check Fuel Pump Motor

  NO -- Go to FA2. See: Fuel System Diagnosis/FA - No Fuel Pressure Test/FA2 - Check For Short(s)

FA2 - Check For Short(s)

- Key Off.
- Disconnect the fuel pump relay.
- Disconnect the Powertrain Control Module **(PCM)**.
- Disconnect the fuel pump connector at the fuel pump assembly.
- Measure the resistance between the LG and W/Y wires at the fuel pump relay connector and ground.
- **Are the resistances greater than 10,000 ohms?**

  NOTE: Check inertia fuel shutoff switch for "tipped" condition. Reset if tripped.

  YES -- Go to FA3. See: Fuel System Diagnosis/FA - No Fuel Pressure Test/FA3 - Check Power Supply to Fuel Pump Relay

  NO -- Service the wire(s) in question for short.

FA3 - Check Power Supply to Fuel Pump Relay

- Key Off.
- Disconnect the fuel pump relay.
- Key On.

Engine	Wire Color	Key	Voltage
2.0L MTX	W/R W/GN	ON ON	10-14 volts 10-14 volts
2.0L 4EAT	BK/W	ON	10-14 volts
2.5L	R/BK	ON	10-14 volts

Wiring ID Chart

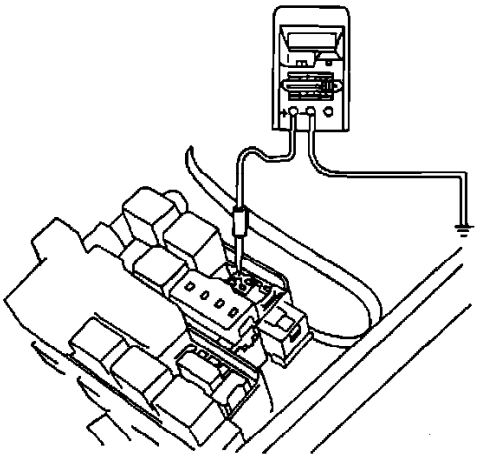

Voltage Check

- Measure the voltage on the following wires at the fuel pump relay connector.
- **Is the voltage approximately battery voltage?**

  YES -- Go to FA4. See: Fuel System Diagnosis/FA - No Fuel Pressure Test/FA4 - Check Fuel Pump Relay

  NO -- Go to Pinpoint Test VPWR in EEC Pinpoint Tests. If VPWR is OK, Service wire(s) for open(s).

FA4 - Check Fuel Pump Relay

- Key Off.
- Remove the fuel pump relay.
- Apply 12 volts across the following terminals on the fuel pump relay.

Terminals "A" and "B"	Resistance at "C" and "D"
12 volts applied	Less than 5 ohms
0 volts applied	Greater than 10,000 ohms

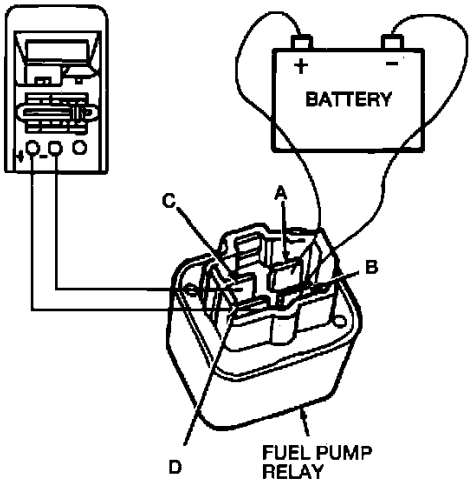

FA6 - Fuel Pump Relay

- Follow the chart and measure the resistance between the C-terminal and the D-terminal.
- **Are the resistance readings OK?**

  YES -- Go to FA5. See: Fuel System Diagnosis/FA - No Fuel Pressure Test/FA5 - Check Fuel Pump Relay to PCM Continuity

  NO -- Replace the fuel pump relay.

FA5 - Check Fuel Pump Relay to PCM Continuity

- Key Off.
- Remove the fuel pump relay.
- Disconnect the Powertrain Control Module **(PCM).**
- Install the Rotunda Breakout Box 007-00033 or equivalent.

Engine	PCM Pin	BOB Pin	PCM Wire Color	Fuel Pump Relay Wire Color
2.0L MTX	22 8	22 8	LG W/Y	LG W/Y
2.0L 4EAT	3L	8	LG	LG
2.5L	3T	52B	LG	LG

FA10 - Fuel Pump Relay To PCM Continuity

- Measure the resistance of the following wires between the fuel pump relay and the PCM.
- **Is the resistance less than 5 ohms?**

  YES -- Go to FA6. See: Fuel System Diagnosis/FA - No Fuel Pressure Test/FA6 - Check Inertia Fuel Shutoff Switch

  NO -- Service wire(s) in question for open.

FA6 - Check Inertia Fuel Shutoff Switch

- Key Off.
- Disconnect and remove the Inertia Fuel Shutoff **(IFS)** switch from the vehicle.

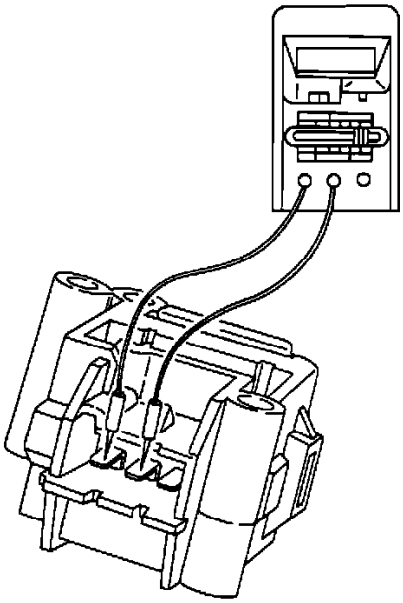

Inertia Fuel Shutoff Switch Check

- Measure the resistance between the terminals shown.
- Sharply shake the IFS switch to verify that the switch trips.
- Measure the resistance between the terminals shown on the inertia fuel shutoff switch.

Switch Position	Resistance
Open (tripped)	Greater than 10,000 ohms
Closed (set)	Less than 5 ohms

- **Are the resistances OK and does the switch trip when shaken sharply?**

  YES -- Go to FA7. See: Fuel System Diagnosis/FA - No Fuel Pressure Test/FA7 - Check For Open to Inertia Fuel Shutoff Switch

  NO -- Replace the inertia fuel shutoff switch.

FA7 - Check For Open to Inertia Fuel Shutoff Switch

- Key Off.
- Remove the fuel pump relay.
- Disconnect the inertia fuel shutoff switch connector.
- Measure the resistance of the W/Y wire between the fuel pump relay and the inertia fuel shutoff switch.
- **Is the resistance less than a ohms?**

  YES -- Service the wire between the inertia fuel shutoff switch and the fuel pump.

  NO -- Service the wire between the fuel pump relay and the inertia fuel shutoff switch.

FA8 - Check Fuel Pump Ground

- Key Off.
- Disconnect the fuel pump connector.
- Measure the resistance between the "BK" wire at the fuel pump connector and ground.
- **Is the resistance less than 5 ohms?**

  YES -- Go to FA9. See: Fuel System Diagnosis/FA - No Fuel Pressure Test/FA9 - Check Fuel Pump Motor

  NO -- SERVICE ground wire of the fuel pump.

FA9 - Check Fuel Pump Motor

- Relieve the fuel pressure.
- Connect Rotunda Fuel Pressure Tester 014-00748 or equivalent to the fuel filter with the main valve closed and drain valve closed.
- Jump the fuel pump test terminal to ground as shown in Test Step F1.
- Key On.
- **Is the maximum fuel pressure within specification?**

  YES -- Go to FB2. See: Fuel System Diagnosis/FB - Low Fuel Pressure Test/FB2 - Check Inline Fuel Filter Condition

  NO -- Replace the fuel pump.

FB1 - Power Supply to Fuel Pump

- Key Off.
- Disconnect the fuel pump connector at the fuel pump assembly.
- Jump the fuel pump test terminal to ground. Refer to Test Step F1 for terminal locations.
- Key On.
- Measure the voltage on the BK/W wire at the fuel pump connector.
- **Is the voltage between 10.0-14.0 volts?**

  YES -- Go to FB2. See: Fuel System Diagnosis/FB - Low Fuel Pressure Test/FB2 - Check Inline Fuel Filter Condition

  NO -- Go to FA1. See: Fuel System Diagnosis/FA - No Fuel Pressure Test

FB2 - Check Inline Fuel Filter Condition

WARNING: Before starting these tests, release the fuel pressure from the fuel system to reduce the risk of injury or fire, as outlined in **Service Precautions**.

- Remove the high pressure in-line fuel filter for inspection.
- Inspect the filter element for contamination or blockage.
- Compare the customer's service record and driving conditions versus the recommended maintenance schedule.
- **Is the fuel filter free of contamination, blockage, and within the recommended maintenance schedule?**

  YES -- Go to FB3. See: Fuel System Diagnosis/FB - Low Fuel Pressure Test/FB3 - Fuel Pressure Regulator Diaphragm Condition

  NO -- Service the fuel filter as required. Repeat Test Step F1. See: Fuel System Diagnosis/F1 - Fuel Pressure Test

FB3 - Fuel Pressure Regulator Diaphragm Condition

WARNING: Before starting these tests, release the fuel pressure from the fuel system to reduce the risk of injury or fire, as outlined in **Service Precautions**.

- Install Rotunda Fuel Pressure Tester 014-00748 or equivalent with EFI Test Adapter D87C-9974-A in the fuel line between the fuel filter and fuel rail, with its main valve open and its drain valve closed. Refer to Test Step F1. See: Fuel System Diagnosis/F1 - Fuel Pressure Test
- Start the engine and run for 10 seconds.
- Stop the engine and wait 10 seconds.
- Start the engine again and run for 10 seconds.
- Stop the engine and remove the vacuum hose from the pressure regulator.
- Examine the vacuum port in the pressure regulator for evidence of fuel leakage through the diaphragm.

- **Is the vacuum port OK?**

  YES -- Go to FB4. See: Fuel System Diagnosis/FB - Low Fuel Pressure Test/FB4 - Fuel Pressure Regulator Leak Down Check

  NO -- Replace the fuel pressure regulator. Repeat Test Step F1. See: Fuel System Diagnosis/F1 - Fuel Pressure Test

FB4 - Fuel Pressure Regulator Leak Down Check

- Reconnect the vacuum hose.
- With the Rotunda Fuel Pressure Tester 014-00748 or equivalent still installed from previous test, run the engine for a minimum of 30 seconds.
- Stop the engine and observe the fuel pressure after 5 minutes.
- **Is the fuel pressure greater than 147 kPa (21.0 psi) after 5 minutes?**

  YES -- Go to FB5. See: Fuel System Diagnosis/FB - Low Fuel Pressure Test/FB5 - Fuel Pressure Regulator Valve Seat Leakage

  NO -- Repeat this test step. If the fuel pressure still drops more than specified, test the injector for leakage, refer to Test Step FD4. See: Fuel System Diagnosis/FD - Fuel Injector Test/FD4 - Check Fuel Injectors (Cleaning and Leakage) If injectors are OK, replace the fuel pressure regulator.

FB5 - Fuel Pressure Regulator Valve Seat Leakage

- Connect Rotunda Vacuum Tester 021-00037 or equivalent to the fuel return tube on the fuel pressure regulator and apply a 508 mm Hg (20.0 in Hg) vacuum.
- Observe the vacuum gauge for at least 10 seconds.
- **Does the vacuum drop lower than 254 mm Hg (10.0 in Hg) in 10 seconds?**

  YES -- Replace the fuel pressure regulator. Repeat Test Step F1. See: Fuel System Diagnosis/F1 - Fuel Pressure Test

  NO -- Go to FB6. See: Fuel System Diagnosis/FB - Low Fuel Pressure Test/FB6 - Fuel Pump Flow Volume Check

FB6 - Fuel Pump Flow Volume Check

WARNING: Before starting these tests, release the fuel pressure from the fuel system to reduce the risk of injury or fire, as outlined in **Service Precautions**.

- Install Rotunda Fuel Pressure Tester 014-00748 or equivalent with EFI Test Adapter D87C-9974-A in the fuel line between the fuel filter and fuel rail, with its main valve open and its drain valve closed. Refer to Test Step F1.
- Place the bypass hose in a measuring container inside an empty overflow container.
- Jump the fuel pump test terminal to ground. Refer to Test Step F1 for terminal locations.
- Key On.

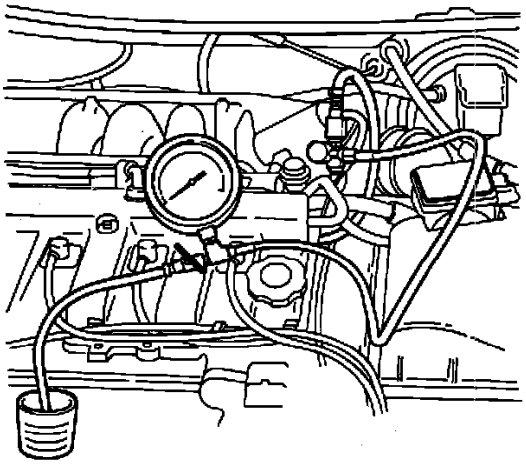

Fuel Pump Flow Volume Testing

- Collect fuel in the measuring vessel for 10 seconds.
- **Is the amount of fuel collected within specification?**

  YES -- Go to FB7. See: Fuel System Diagnosis/FB - Low Fuel Pressure Test/FB7 - Fuel Pump Check Valve Leak Down

  NO -- Service the fuel pump inlet screen, and repeat this test. If flow is still not within specified limits, replace the fuel and repeat test.

FB7 - Fuel Pump Check Valve Leak Down

WARNING: Before starting these tests, release the fuel pressure from the fuel system to reduce the risk of injury or fire, as outlined in **Service Precautions**.

- Connect the Rotunda Fuel Pressure Tester 014-00748. or equivalent with EFI Test Adapter D87C-9974-A between the fuel filter and fuel rail , with the main valve closed and the drain valve opened. Refer to Test Step F1. See: Fuel System Diagnosis/F1 - Fuel Pressure Test
- Jump the fuel pump test terminal to ground.
- Key On.
- Run the fuel pump for 30 seconds minimum.
- Remove the jumper and note fuel pressure on the gauge for 3 minutes.
- **Does the output fuel pressure decrease more than 13.78 kPa (2.0 psi) in three minutes?**

  YES -- Go to FD1. See: Fuel System Diagnosis/FD - Fuel Injector Test/FD1 - Fuel Injector Function Check

  NO -- Replace the fuel pump. Repeat Test Step F1. See: Fuel System Diagnosis/F1 - Fuel Pressure Test

FC1 - Check Fuel Pressure Regulator For High Pressure

WARNING: Before starting these tests, release the fuel pressure from the fuel system to reduce the risk of injury or fire, as outlined in **Service Precautions**.

- Check the fuel pressure regulator housing for damage or dents that could cause a higher spring load on the fuel pressure regulator.
- Check the integrity of the fuel pressure regulator diaphragm, refer to Test Step FB3.
- **Is the fuel system free of defects that could cause the fuel pressure regulator to produce excessive fuel system pressure?**

  YES -- Go to FC2. See: Fuel System Diagnosis/FC - High Fuel Pressure Test/FC2 - Check Fuel Return For Cause of High Pressure

  NO -- Repair or Replace damaged components as required. Repeat Test Step F1. See: Fuel System Diagnosis/F1 - Fuel Pressure Test If the pressure is still high, Go to FC2. See: Fuel System Diagnosis/FC - High Fuel Pressure Test/FC2 - Check Fuel Return For Cause of High Pressure

FC2 - Check Fuel Return For Cause of High Pressure

WARNING: Before starting these tests, release the fuel pressure from the fuel system to reduce the risk of injury or fire, as outlined in **Service Precautions**.

- Remove the fuel return line at the pressure regulator and at the fuel tank.
- Provide a suitable fuel receptacle at the tank end of the return line to avoid fuel spillage.
- Check the fuel return line for restriction due to blockage, kinking, or pinching by blowing through it with 34.5-68.9 kPa (5-10 psi) regulated shop air.
- **Is the fuel return line free of any restriction that could cause excessive fuel pressure?**

  YES -- Replace the fuel pressure regulator. Repeat Test Step F1. See: Fuel System Diagnosis/F1 - Fuel Pressure Test

  NO -- Repair the defects. Clean or replace the faulty components as required to remove the cause of high pressure. Repeat Test F1. See: Fuel System Diagnosis/F1 - Fuel Pressure Test

FD1 - Fuel Injector Function Check

- With the engine warmed and idling (or cranking if it does not start) and using a mechanic's stethoscope or equivalent, listen for regularly operating sounds at each fuel injector.
- **Is operating sound present?**

  YES -- Go to FD4. See: Fuel System Diagnosis/FD - Fuel Injector Test/FD4 - Check Fuel Injectors (Cleaning and Leakage)

  NO -- Go to FD2. See: Fuel System Diagnosis/FD - Fuel Injector Test/FD2 - Check Injector Electrical Signal

FD2 - Check Injector Electrical Signal

CAUTION: Do not connect a test lamp to the injector harness. Damage may result to the Powertrain Control Module **(PCM).**

- Check the electrical continuity of the injector between each injector and the PCM as follows:
  - Disconnect the fuel injector lead and insert the continuity checker from Rotunda Fuel Injector Tester/Cleaner 113-0001A or equivalent into the injector lead plug.
  - Start or crank engine.
  - Observe whether the continuity checker blinks (showing a completed circuit for the injector being tested).
- Repeat the check for each injector.
- **Do all injector circuit leads show continuity?**

  YES -- Go to FD3. See: Fuel System Diagnosis/FD - Fuel Injector Test/FD3 - Check Fuel Injector Resistance

  NO -- Check for 12 volts at each injector wire with key On. Service wire as required.

FD3 - Check Fuel Injector Resistance

WARNING: Before starting these tests, release the fuel pressure from the fuel system to reduce the risk of injury or fire, as outlined in **Service Precautions**.

- Remove the electrical connectors from the injectors. If necessary, remove the fuel injectors to gain access to the injector terminals.
- Measure the electrical resistance of each injector.
- **Is the resistance of all injectors approximately 12-16 ohms (20°C [68°F])?**

  YES -- Go to FD4. See: Fuel System Diagnosis/FD - Fuel Injector Test/FD4 - Check Fuel Injectors (Cleaning and Leakage)

  NO -- Replace the faulty injectors. Repeat Test Step FD1 and if OK, Go to Test Step FD4. See: Fuel System Diagnosis/FD - Fuel Injector Test/FD4 - Check Fuel Injectors (Cleaning and Leakage)

FD4 - Check Fuel Injectors (Cleaning and Leakage)

NOTE: This procedure does not require the matching of injector color with flow gauge band color on the Fuel Injector Tester/Cleaner.

WARNING: Before starting these tests, release the fuel pressure from the fuel system to reduce the risk of injury or fire, as outlined in **Service Precautions**.

- Use the Rotunda Fuel Injector Tester/Cleaner 113-0001A, or equivalent and accompanying instructions to clean the fuel injectors.
- With the fuel injector tester/cleaner still installed on the fuel system, note any significant pressure loss due to injector leakage when the tester pump is turned to Off.
- Check each fuel injector individually for leakage as required, using the injector bench tester and the fuel injector bench testing procedure associated with the fuel injector tester/cleaner. Verify that each injector leakage rate is within specification (1 drop/2 minutes maximum).
- **Is the leakage rate for individual injectors within specifications?**

  YES -- Go to **Powertrain Management / Testing and Inspection / Procedures / Diagnostic Routines.**

  NO -- Replace faulty fuel injectors as required.

System Inspection

1. Visually inspect intake air system components for:

   Mechanical:

   ^ Loose, kinked, pinched, or damaged air lines

   ^ Loose, kinked, pinched, or damaged vacuum lines

   Electrical:

   ^ Damaged or loose connections

   ^ Damaged insulation

   ^ Damaged air flow meter

2. Check air intake hose for cracking, loose clamps, or a disconnected hose.
3. If all checks are okay, proceed to Pinpoint Tests.

IA1 - Check Air Cleaner Housing and Element Condition

CAUTION: Do not use compressed air to clean the air cleaner element.

^ Inspect the air cleaner housing, inlet air hoses and connecting components for damage. blockage, looseness, or missing fasteners.

^ Inspect air cleaner element for dirt.

^ **Are the air cleaner housing and element free of damage and dirt blockage?**

YES -- Go to IA2. See: IA - Inlet Air Control System/IA2 - Check Mass Air Flow (MAF) Sensor

NO -- Replace the component in question.

IA2 - Check Mass Air Flow (MAF) Sensor

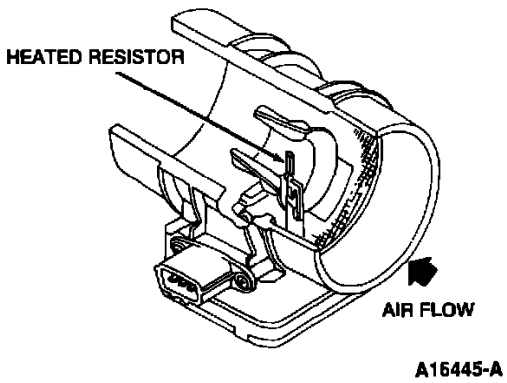

Mass Airflow Sensor

^ Visually check the Mass Air Flow **(MAF)** sensor for cracks, loose mounting, damaged electrical connector, broken or contaminated heated resistor, and torn or restricted protective screen.

NOTE: Electrical component testing is covered in **Computers and Control Systems / Testing and Inspection.**

^ **Is MAF sensor free of damage or restrictions?**

YES -- Go to IA3. See: IA - Inlet Air Control System/IA3 - Check Resonance Chamber Condition

NO -- Replace the MAF sensor.

IA3 - Check Resonance Chamber Condition

^ Visually check resonance chamber for a pinched hose connection, or for cracks that allow unfiltered air and moisture to enter the system.

^ Check resonance chamber for other damage.

^ **Is the resonance chamber free of damage or poor connections?**

YES -- Go to IA4. See: IA - Inlet Air Control System/IA4 - Check Throttle Linkage

NO -- Service or replace the resonance chamber.

IA4 - Check Throttle Linkage

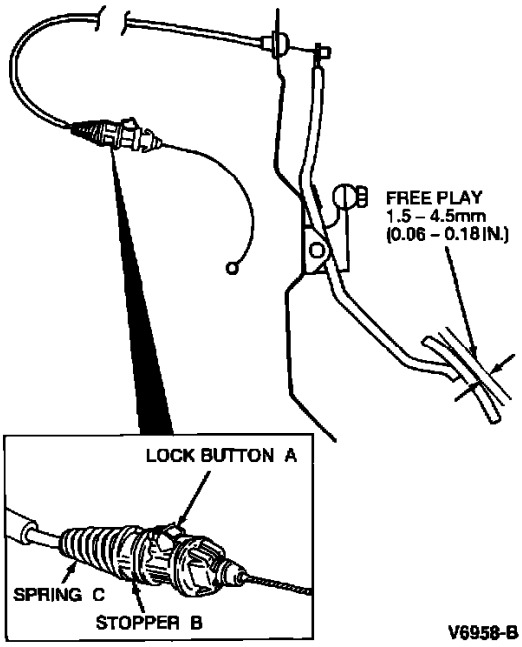

Throttle Linkage

^ Check the throttle linkage for damage, proper installation, and freedom of movement when accelerator pedal is depressed.

^ **Is the linkage correctly installed, and does it operate properly?**

YES -- Go to IA5. See: IA - Inlet Air Control System/IA5 - Check Throttle Body Condition

NO -- Service, clean or replace the linkage or part in question and adjust cable deflection.

IA5 - Check Throttle Body Condition

^ Remove the air intake hose and check for oil sludge or oil vapors in the throttle body.

^ Reconnect the air intake hose.

^ Check throttle body and components for cracks. looseness, or other damage.

^ Without removing throttle body from engine, check the integrity of vacuum and electrical lines for looseness, pinching, misrouting, corrosion, or other obvious damage.

^ Check the throttle lever for freedom of movement.

^ **Are the throttle body and attachments OK?**

YES -- Go to IA6. See: IA - Inlet Air Control System/IA6 - Check Throttle Valves

NO -- Service or replace the throttle body and/or related components as required.

IA6 - Check Throttle Valves

^ Remove the throttle body from the engine.

^ Check that the throttle valve moves smoothly from the fully closed to the fully open position.

^ Check for loose, bent. or damaged valves, and for contamination that can cause binding.

CAUTION: Do not remove the thin sealant coating from the throttle bore.

^ **Is the throttle valve free from damage, binding, and contamination?**

YES -- Return to **Powertrain Management / Testing and Inspection / Procedures / Diagnostic Routines**.

NO -- Service or replace the throttle body.

Idle Speed: Adjustments
Automatic Transaxle

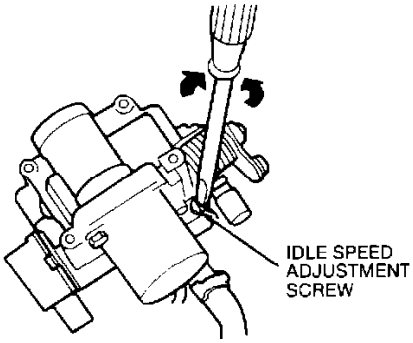

Idle Speed Adjustment

1. Warm engine to operating temperature. Connect tachometer.

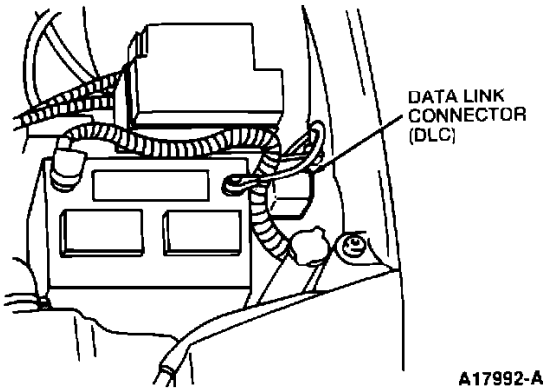

Data Link Connector

2. Turn engine and all accessories Off. Ground PCM Self-Test Input **(STI)** pin at data link connector.
3. Start engine check idle speed. If not within specification, correct with idle speed adjustment screw.

   IDLE SPEED: 650 - 750 rpm
4. Turn engine Off, remove STI ground, and let engine cool.
5. Start cold engine; idle speed should be higher than when warm.

Idle Speed: Adjustments
Manual Transaxle

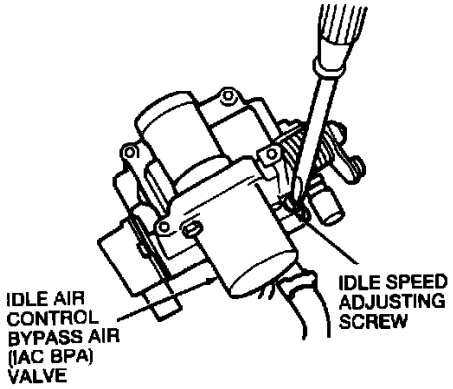

Idle Air Control Bypass Air Valve

1. Start engine and let it warm up to normal operating temperature.
2. Turn the engine off.
3. Turn all of the accessories to the off position.
4. Connect Rotunda Digital Tachometer/Multimeter 055-00101 or equivalent to the number one spark plug wire.
5. Disconnect the Idle Air Control-Bypass Air **(IAC-BPA)** connector.
6. Start and run the engine at 2500 rpm for 30 seconds.
7. Make a note of idle speed.
8. Turn the idle speed adjusting screw to set the idle speed 650-750 rpm.
9. Shut the engine off and re-run the test to verify that the idle speed is correct.
10. Connect the IAC-BPA connector.

ACCELERATOR PEDAL AND LINKAGE

CONDITION	POSSIBLE SOURCE	ACTION
• Hard Accelerator Pedal Shaft Lever Effort	• Worn accelerator lever pivot bushing. • Accelerator cable binding.	• REPLACE accelerator lever pivot bushing. • REPLACE accelerator cable.
• Accelerator Pedal Shaft Lever Feels Rough or Raspy	• Frayed or binding accelerator cable.	• REPLACE accelerator cable.
• Accelerator Pedal Shaft Lever Binds or Sticks	• Kinked accelerator cable. • Foreign object caught in accelerator pedal linkage.	• REPLACE accelerator cable. • CHECK accelerator pedal linkage.
• High Engine Idle Speed	• Kinked accelerator cable. • Foreign object caught in accelerator pedal linkage. • Misadjusted engine idle speed.	• REPLACE accelerator cable. • CHECK accelerator pedal linkage. • ADJUST idle speed.

Accelerator Pedal: Service and Repair

REMOVAL

1. If equipped with speed control, remove the speed control actuator from the accelerator pedal shaft lever.
2. Remove the accelerator cable end from the accelerator pedal and shaft.

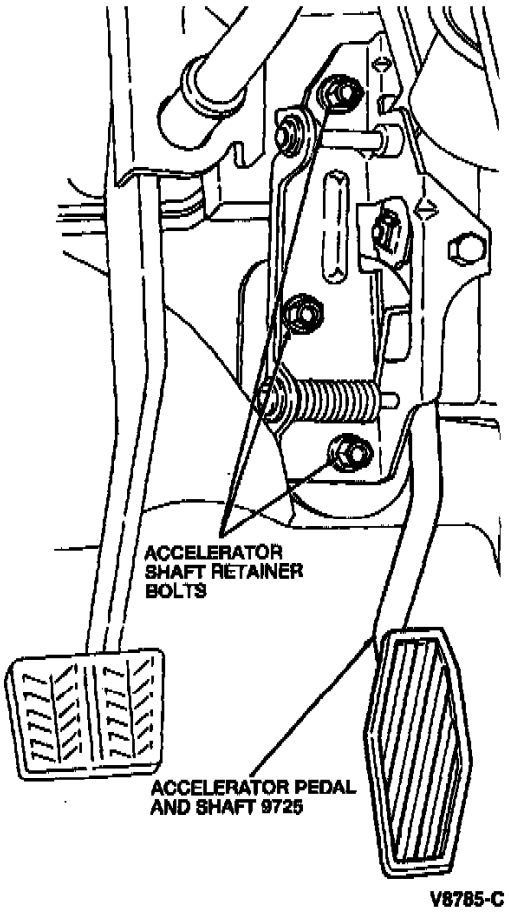

Accelerator Shaft

3. Remove the three accelerator shaft retainer bolts.

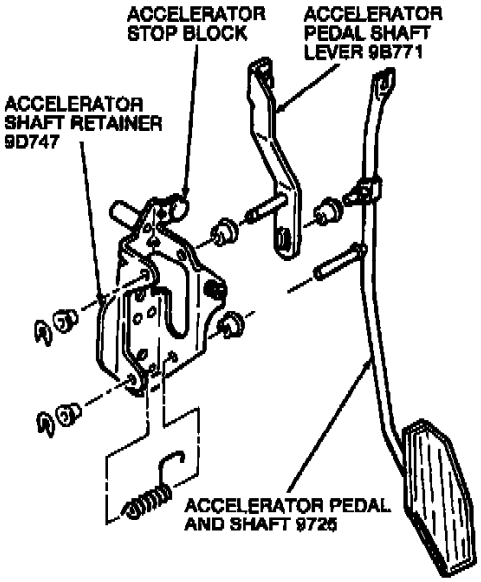

Accelerator Pedal Assembly

4. Remove the accelerator shaft retainer.
5. Release the accelerator shaft spring on the accelerator pedal and shaft.
6. Remove the retaining clip on the accelerator pedal and shaft.

7. Slide the accelerator pedal and shaft out and remove the accelerator shaft spring.

INSTALLATION

To install, reverse the removal procedure. Tighten the accelerator shaft retainer bolts to **8-10 Nm (71-88 lb in)**.

Air Cleaner Housing: Service and Repair

REMOVAL

1. Remove the fresh air duct/resonance chamber No. 1 assembly.
2. Disconnect the Mass Air Flow **(MAF)** sensor connector and the Intake Air Temperature **(IAT)** sensor connector.
3. Loosen the clamp between the MAF sensor and the air duct.
4. Remove the air cleaner upper cover.
5. Remove the air cleaner element.
6. Remove the two air cleaner lower cover bolts and nut.
7. Remove the air cleaner lower cover,

INSTALLATION

1. Install the air cleaner lower cover into its mounting position.
2. Install the two air cleaner lower cover bolts and nut. Tighten the air cleaner lower cover bolts and nut to **19-25 Nm (14-19 lb ft)**.
3. Install the air cleaner element into air cleaner lower cover.
4. Install the air cleaner upper cover to the air duct and tighten the clamp.
5. Install the air cleaner upper cover to the air cleaner lower cover.
6. Connect the MAF sensor connector and the IAT sensor connector.
7. Install the fresh air duct/resonance chamber No. 1 assembly.

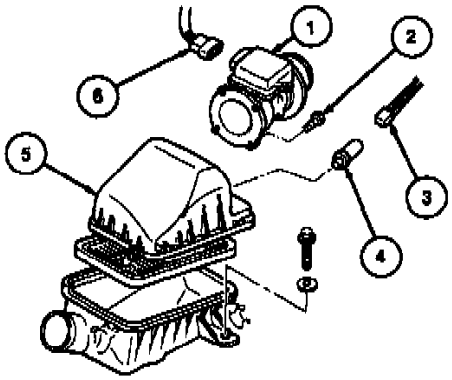

Item	Part Number	Description
1	12B579	Mass Airflow Sensor
2	—	Mass Air Flow (MAF) Sensor Bolts
3	—	Intake Air Temperature (IAT) Sensor Connector
4	12A697	Intake Air Temperature Sensor
5	—	Engine Air Cleaner Upper Cover (Part of 9600)
6	—	Mass Air Flow (MAF) Sensor Connector

Engine Air Cleaner Assembly

Mass Air Flow (MAF) Sensor: Description and Operation
Manual Transmission

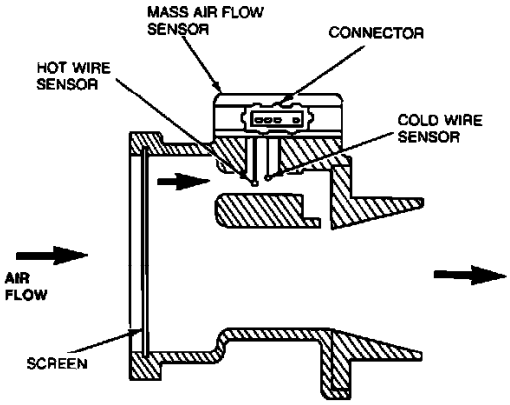

Mass Air Flow Sensor

PURPOSE

The Mass Air Flow **(MAF)** sensor measures the total volume and mass of air flowing into the engine. This value is one of the major factors used by the Powertrain Control Module **(PCM)** in determining the fuel injection base pulse width and ignition timing advance.

CONSTRUCTION

The MAF sensor is located directly in the air flow path between the air cleaner housing and the throttle body. The sensor is designed and located such that all air entering the intake manifold must flow through it. Located in the MAF sensor directly in the airstream are two platinum wires, a hot wire heated by electrical current and a cold reference wire. The MAF sensor uses the air flow across these wires to calculate it's output.

OPERATION

The MAF sensor operates on the principle that if the hot wire is maintained at a constant temperature above ambient, the thermal loss exhibited by the hot wire is proportional to the total mass of air flowing across it.

The sensor maintains the hot wire exactly 200°C (392°F) hotter than the reference (cold) wire. The MAF sensor then measures the amount of electrical current required to maintain this temperature difference and converts this value to an analog DC voltage. This output varies directly with the mass air flow rate and ranges from 0.5 to 4.5 volts.

RELATED DIAGNOSTIC TROUBLE CODES

DTC 72/129 - Insufficient MAF sensor output change during the dynamic response (snap throttle) test.

DTC 66/157 - MAF sensor output went below the minimum value of 0.4 volts (continuous memory code).

DTC 56/158 - MAF sensor output went above the maximum value of 4.5 volts (continuous memory code).

DTC 26/159 - MAF sensor output was measured out of range during a self-test, >0.7 volts during the Key On Engine Off (**KOEO**) test and not between 0.2-1.5 volts during the Key On Engine Running (**KOER**) test.

DTC 184 - MAF sensor output is higher than expected.

DTC 185 - MAF sensor output is lower than expected.

Note: DTC 184, 185 were intended to detect in-range failures of the MAF sensor. The PCM compares information from the Mass Air Flow (MAF) sensor, throttle position sensor, and fuel injection pulse width. If any one value appears to be out of line with the other two an in-range trouble code will be set.

Mass Air Flow (MAF) Sensor: Description and Operation

Automatic Transmission

The Mass Air Flow (MAF) sensor, located between air filter and throttle body, measures mass of air entering the engine due to volumetric displacement.

The MAF sensor operates on the principle that if a mass is maintained at a constant temperature above the ambient environment, then thermal loss is proportional to mass flow of the cooling medium it is subjected to. PCM heats a wire element above ambient temperature. As air passes through the sensor, the air cools the wire element. The PCM supplies more power to the wire to keep it at a constant temperature difference. When a drop in power useage occurs, the sensor sends a signal to the PCM indicating the drop. Signal increases with airflow into the engine.

Mass Air Flow (MAF) Sensor: Service and Repair Manual Transaxle

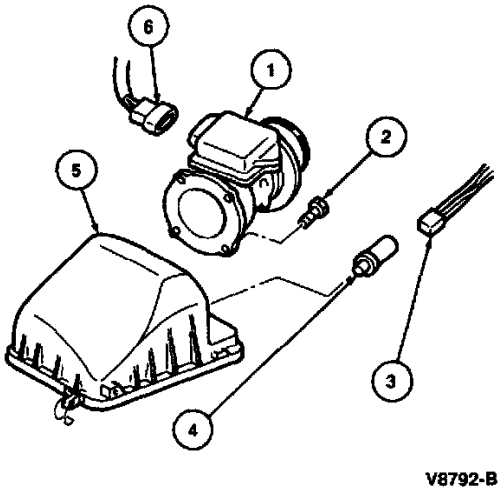

Item	Part Number	Description
1	12B579	Mass Airflow Sensor
2	—	Mass Air Flow (MAF) Sensor Bolts
3	—	Intake Air Temperature (IAT) Sensor Connector
4	12A697	Intake Air Temperature Sensor
5	—	Engine Air Cleaner Upper Cover
6	—	Mass Air Flow (MAF) Sensor Connector

Mass Airflow Sensor

REMOVAL

1. Disconnect the battery ground cable.
2. Disconnect the Mass Air Flow **(MAF)** sensor connector.
3. Disconnect the Intake Air Temperature **(IAT)** sensor connector.
4. Loosen the engine air cleaner tube clamp (90632) at the air cleaner to intake manifold tube (9B697).
5. Remove the engine air cleaner upper cover.
6. Remove the four MAF sensor bolts.
7. Remove the MAF sensor from the engine air sensor upper cover.

INSTALLATION

1. To install, reverse the removal procedure.
2. Tighten the MAF sensor bolts to **8-10 Nm (71-88 in lb).**
3. Tighten the engine air cleaner tube clamps to **1.4-2.5 Nm (15-22 in lb).**

NOTE: When the battery has been disconnected and reconnected, some abnormal drive symptoms may occur while the powertrain control module relearns its adaptive strategy. The vehicle may need to be driven 10 miles or more to relearn the adaptive strategy.

Mass Air Flow (MAF) Sensor: Service and Repair

Automatic Transaxle

1. Disconnect negative battery cable.
2. Unplug sensor electrical connector.
3. Remove fresh air duct from air cleaner upper cover.
4. Remove air cleaner upper cover.
5. Remove sensor attaching screws and separate sensor from air cleaner cover.
6. Reverse procedure to install. Torque attaching screws to **71 - 97 in lb (8 - 11 Nm).**

Fillpipe Restrictor: Description and Operation

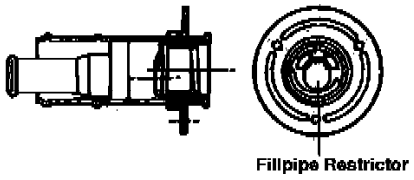

Fillpipe Restrictor

PURPOSE

The restricted opening of the fuel tank filler pipe allows only an unleaded fuel nozzle to be inserted.

CONSTRUCTION

The restrictor consists of a narrow opening in the fuel tank filler pipe covered by a spring steel flap.

OPERATION

The smaller unleaded fuel nozzle will fit through the narrow opening and push the trap door aside, allowing normal filling. Leaded fuel nozzles will not fit in the narrow opening. The spring steel flap being closed causes a fuel back-up and automatic nozzle shut-off.

Fuel Filter: Service and Repair

WARNING: DO NOT smoke or carry an open flame of any type when working on or near any fuel related component. DO NOT work on any fuel related components when the engine is hot. DO NOT allow excess fuel from fuel filter or lines to contact any engine or exhaust components.

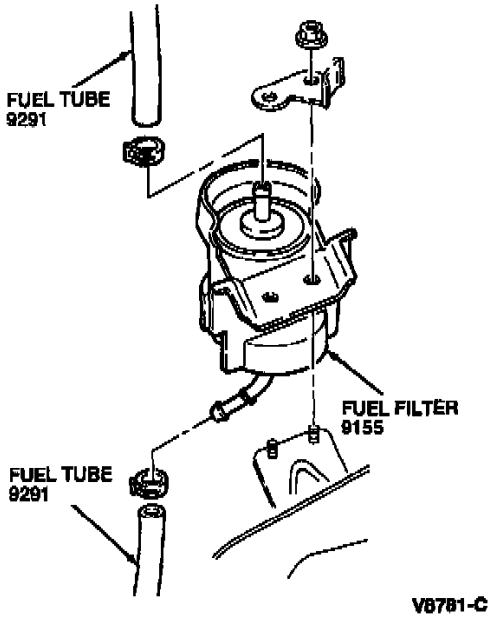

Fuel Filter

REMOVAL

1. Relieve fuel system pressure.
2. Disconnect negative battery cable.

   NOTE: When the battery has been disconnected and reconnected, some abnormal drive symptoms may occur while the powertrain control module relearns its adaptive strategy. The vehicle may need to be driven 10 miles or more to relearn the adaptive strategy.

3. Remove nuts on filter bracket.
4. Remove hose clamps.
5. Disconnect hoses from both ends of filter. Plug the fuel hoses to prevent leakage.
6. Remove fuel filter from bracket.

INSTALLATION:

1. Install the fuel filter into the filter bracket.
2. Connect the fuel tubes from both ends of the fuel filter.
3. Install the fuel tube clamps.
4. Install the two nuts on the fuel filter bracket. Tighten bracket nuts to **8.0-11.0 Nm (71-97 lb in)**.
5. Connect battery ground cable.
6. Start engine and check for leaks.

Fuel Injector: Description and Operation

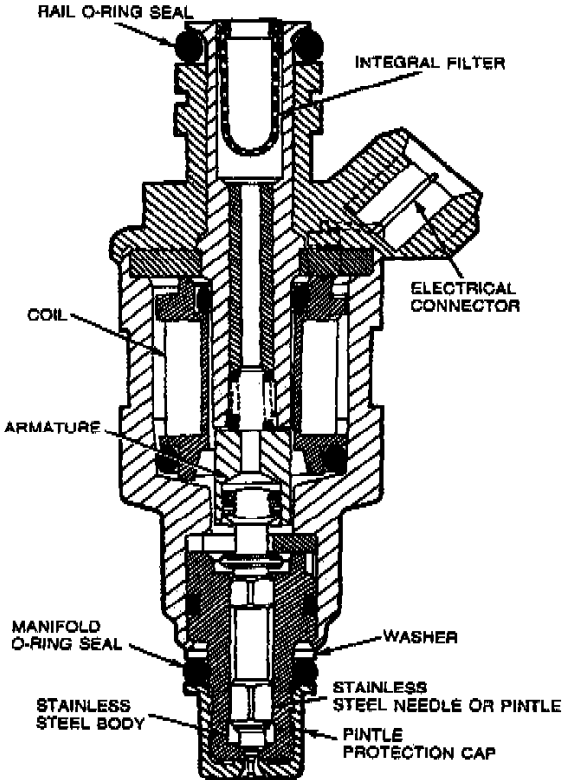

Fuel Injector

PURPOSE

The fuel injector nozzles are electro-mechanical devices that meter and atomize fuel delivered to the engine.

OPERATION

The injector always opens the same distance, and the fuel pressure is maintained at a constant value by the pressure regulator. The amount of fuel delivered by the injector depends on the amount of time that the nozzle is open. This is the injector pulse width: The time in milliseconds the injector nozzle is open.

An electrical signal from the Powertrain Control Module **(PCM)** activates the injector solenoid causing the pintle to move inward off the seat, allowing fuel to flow through the orifice. Atomization of the fuel is obtained by contouring the pintle at the point at where the fuel separates.

CONSTRUCTION

This specialized solenoid has an armature and a needle or ball valve with a spring that holds the needle or ball closed against the valve seat. The armature opens the valve when it receives a current pulse from the system computer. When the solenoid is energized, it unseats the valve to inject fuel.

Fuel Injector: Service and Repair

REMOVAL

1. Relieve the fuel pressure.
2. Disconnect the negative battery cable.
3. Disconnect the fuel injector wiring harness.
4. Disconnect fuel lines.
5. Disconnect fuel pressure regulator vacuum line.
6. Remove the fuel line mounting bracket bolt.

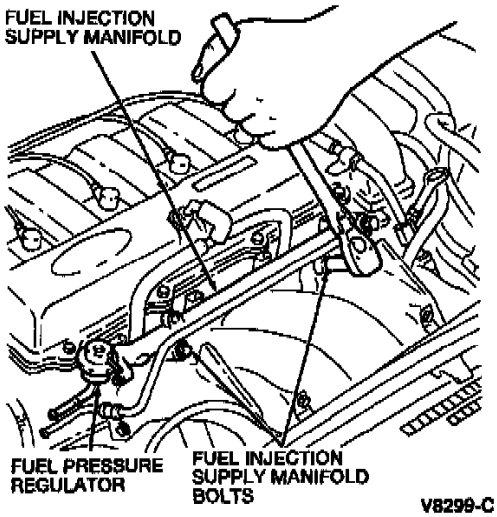

Supply Manifold

7. Remove the fuel rail attaching bolts, spacers, insulators and fuel injection supply manifold with the injectors and fuel pressure regulator attached.

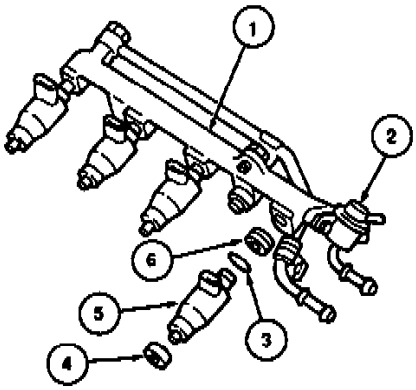

Item	Part Number	Description
1	9F792	Fuel Injection Supply Manifold
2	9C968	Fuel Pressure Regulator
3	9229	O-Ring
4	9C991	Insulator
5	9F593	Fuel Injector
6	9229	Insulator

Fuel Injection Supply Manifold and Fuel Injectors

8. Remove the fuel injectors, grommets and O-rings from the fuel rail.
9. Remove the O-rings from the fuel injectors.

INSTALLATION

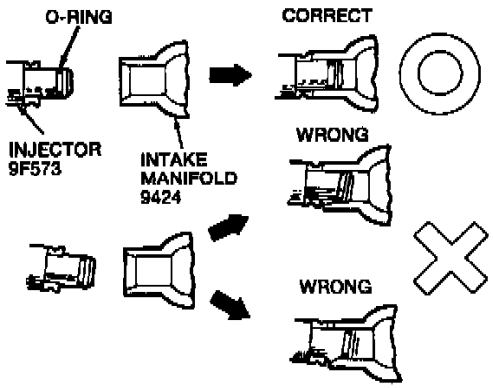

Injector and Grommet Position

1. Position the grommets and new O-rings onto the fuel injectors. Apply a small amount of clean engine oil to the O-rings during installation.

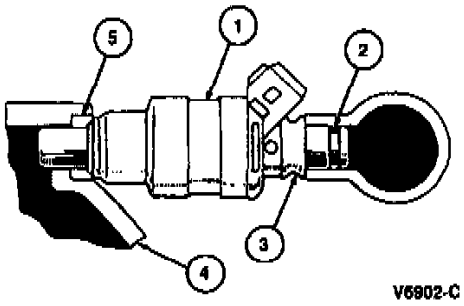

Item	Description
1	Fuel Injector
2	O-Ring
3	Insulator
4	Intake Manifold
5	Insulator

Injector

2. Position the insulators and fuel injectors in the intake manifold.
3. Position the grommets and fuel rail on the injectors.
4. Install the fuel rail attaching bolts and torque to **19-25 Nm (14-18 lb in)**.
5. Connect the fuel pressure regulator vacuum line.
6. Connect the fuel lines to the pressure regulator and the fuel injection supply manifold and torque to **8-11 Nm (71-97 lb in)**.
7. Install the fuel line mounting bracket.
8. Connect the fuel injector wiring harness.
9. connect the negative battery cable.

Fuel Pressure Control Solenoid: Description and Operation

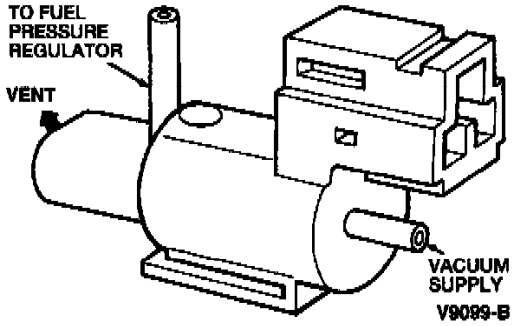

Fuel Pressure Regulator Control Solenoid Valve

PURPOSE

The Fuel Pressure Regulator Control **(FPRC)** solenoid valve controls the vacuum to the fuel pressure regulator, preventing percolation of fuel during idle, or after engine is started at normal operating temperature.

DESCRIPTION

Vacuum to the fuel pressure regulator is momentarily cut and fuel injection pressure is increased to 268.9-310 kPa (39-45 psi). Normal pressure in the fuel line at idle is approximately 207-248 kPa (30-36 psi).

OPERATION

Vacuum is restricted after the engine is restarted, or allowed to idle for approximately two minutes, with the coolant temperature above 70°C (158°F) and/or the intake air temperature above 20°C (68°F).

Fuel Pressure Regulator: Description and Operation

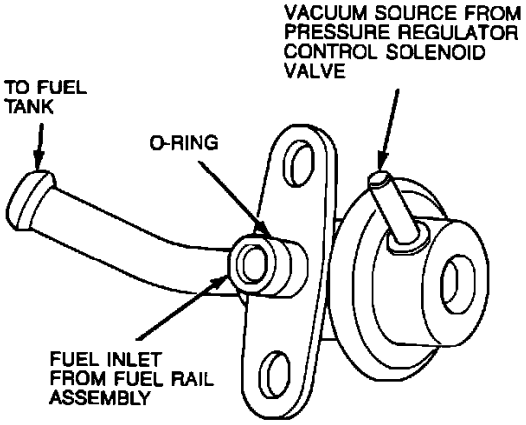

Fuel Pressure Regulator

PURPOSE

Regulates fuel pressure supplied to injectors.

OPERATION

Pressure is controlled by a spring applied to a diaphragm. By exposing the top side of the diaphragm to manifold vacuum, constant fuel pressure is maintained at all injectors. Fuel in excess of immediate requirements passes through the regulator and flows back to the tank.

Fuel Pressure Regulator: Service and Repair

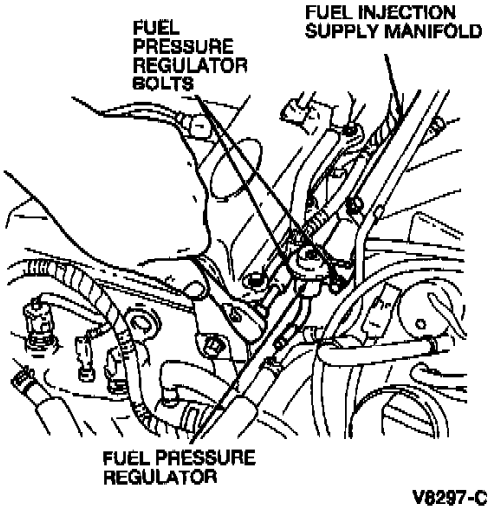

Fuel Pressure Regulator

REMOVAL

1. Relieve fuel pressure.
2. Disconnect battery ground cable.

   NOTE: When the battery has been disconnected and reconnected, some abnormal drive symptoms may occur while the powertrain control module relearns its adaptive strategy. The vehicle may need to be driven 10 miles or more to relearn the adaptive strategy.

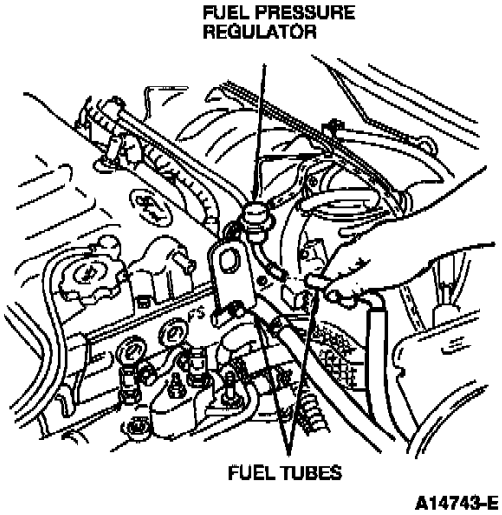

Fuel Pressure Regulator

3. Disconnect the fuel tube from the pressure regulator.
4. Disconnect the fuel pressure regulator vacuum line.

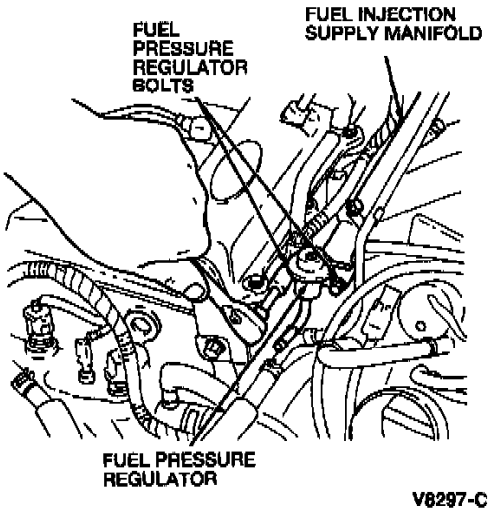

Fuel Pressure Regulator

5. Remove the fuel pressure regulator bolts.

INSTALLATION

1. Install the fuel pressure regulator and retaining bolts. Torque to **8-11 Nm (71-97 in lb)**.
2. Connect the fuel pressure regulator vacuum line.
3. Connect the fuel tube to the pressure regulator.
4. Connect battery ground cable.
5. Start engine and check for leaks.

Fuel Pump: Description and Operation

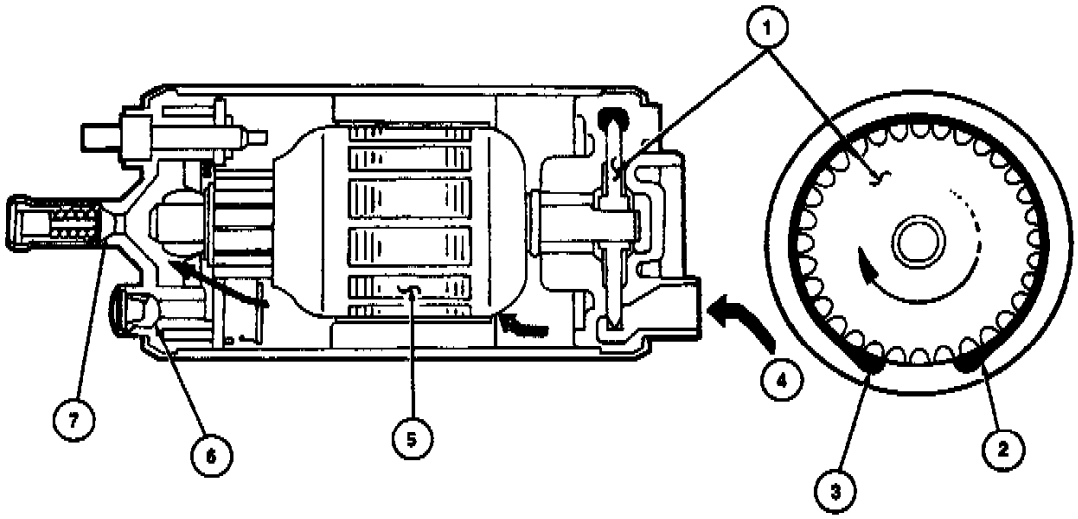

Item	Part Number	Description
1	—	Impeller (Part of 9350)
2	—	Outlet Port (Part of 9350)
3	—	Inlet Port (Part of 9350)
4	—	Fuel Inlet (Part of 9350)
5	—	Motor (Part of 9350)
6	—	Pressure Relief Valve (Part of 9350)
7	—	Check Valve (Part of 9350)

Fuel Pump

PURPOSE

Provides pressurized fuel to the fuel injectors.

CONSTRUCTION

The pump is an impeller type hydraulic unit directly coupled to a permanent magnet motor. Fuel is used as a lubricant and coolant for the motor. A check valve is incorporated in the fuel outlet and a pressure limiter valve is located on the pressure side of the fuel pump housing with a return passage to the fuel inlet side.

OPERATION

When the impeller rotates, a pumping action is created. The circulating impeller draws in fuel at the inlet port and force fuel through the outlet port into the fuel system.

When the pump is shut off, the check valve in the fuel outlet will close, therefore prohibiting the fuel from returning to the fuel tank via the fuel pump. The check valve will therefore maintain a pressure in the fuel lines called the "rest pressure".

The maximum fuel pump pressure (not fuel system pressure) is dependent on the calibration of the pressure limiter. If the fuel pump pressure exceeds a preset limit (for example a clogged fuel filter), the pressure limiter will open a by-pass to the fuel inlet side of the pump.

Fuel Pump: Service and Repair

WARNING: Do not smoke, carry lighted tobacco or open flame of any type when working on or near any fuel related component. Highly flammable mixtures are always present and may be ignited, resulting in possible personal injury.

CAUTION: Fuel supply lines will remain pressurized for long periods of time after engine shut down. This pressure must be relieved before servicing of the fuel system is begun. A valve is provided on the throttle body for this purpose. Remove the air cleaner and relieve system pressure by using Rotunda pressure gauge tool T80L-9974-A or equivalent and drain the system through the drain tube.

REMOVAL

1. Disconnect the battery ground cable.
2. Remove the fuel tank.

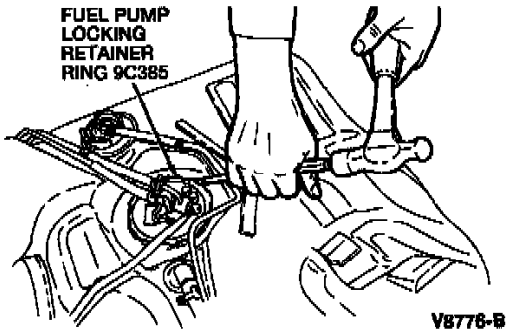

Retainer Ring

3. Remove the fuel pump locking retainer ring.

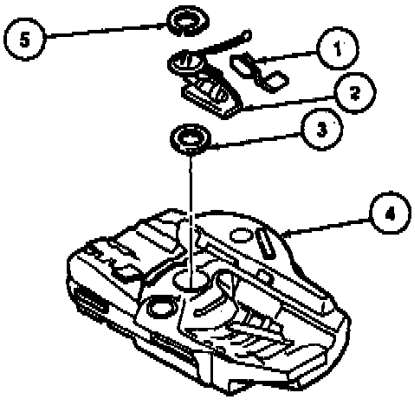

Item	Part Number	Description
1	9275	Fuel Tank Sending Unit
2	9A407	Fuel Pump
3	9276	Fuel Tank Sending Unit Gasket
4	9002	Fuel Tank
5	9C385	Fuel Pump Locking Retainer Ring

Fuel Tank And Related Components

4. Remove the fuel pump and fuel tank sending unit.

INSTALLATION

To install, reverse the removal procedure.

Fuel Pump Relay: Description and Operation

OPERATION

When the ignition switch is turned ON, the Electronic Engine Control **(EEC)** power relay is energized, providing power to the fuel pump relay for 1 to 2 seconds through the Powertrain Control Module **(PCM)** and an Inertia Fuel Shutoff **(IFS)** switch.

Fuel pump power is provided through the fuel pump relay contacts, if the PCM does not receive an ignition signal within approximately one second after the ignition switch is turned to the "ON" position. A timer circuit in the PCM will open the ground circuit to the fuel pump relay, causing the fuel pump relay contacts to OPEN. This action stops the power supply to the fuel pump.

When the ignition switch is turned to the "START" position, the PCM closes the ground circuit to the fuel pump relay, resuming operation of the fuel pump.

After the ignition switch is returned to the "ON" position, power to the fuel pump is supplied through the fuel pump relay.

The PCM monitors engine speed and opens the fuel pump relay ground circuit if the engine speed drops below 120 rpm.

Fuel Injection Supply Manifold Assembly: Description and Operation

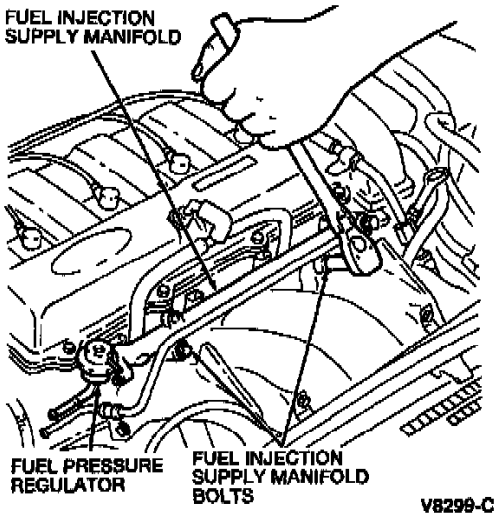

Supply Manifold

PURPOSE

The fuel supply manifold delivers high-pressure fuel from the vehicle fuel supply line to the fuel injectors.

CONSTRUCTION

The assembly consists of a tubular rail, injector connectors, a mounting flange for the fuel pressure regulator and mounting attachments to provide fuel injector retention.

Fuel Injection Supply Manifold Assembly: Service and Repair

REMOVAL

1. Relieve the fuel pressure.
2. Disconnect the negative battery cable.
3. Disconnect the fuel injector wiring harness.
4. Disconnect fuel lines.
5. Disconnect fuel pressure regulator vacuum line.
6. Remove the fuel line mounting bracket bolt.

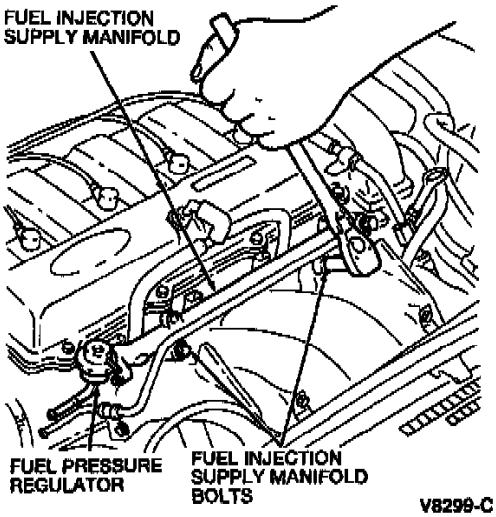

Supply Manifold

7. Remove the fuel rail attaching bolts, spacers, insulators and fuel injection supply manifold with the injectors and fuel pressure regulator attached.

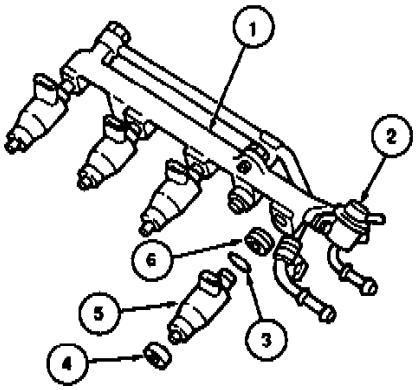

Item	Part Number	Description
1	9F792	Fuel Injection Supply Manifold
2	9C968	Fuel Pressure Regulator
3	9229	O-Ring
4	9C991	Insulator
5	9F593	Fuel Injector
6	9229	Insulator

Fuel Injection Supply Manifold and Fuel Injectors

8. Remove the fuel injectors, grommets and O-rings from the fuel rail.
9. Remove the O-rings from the fuel injectors.

INSTALLATION

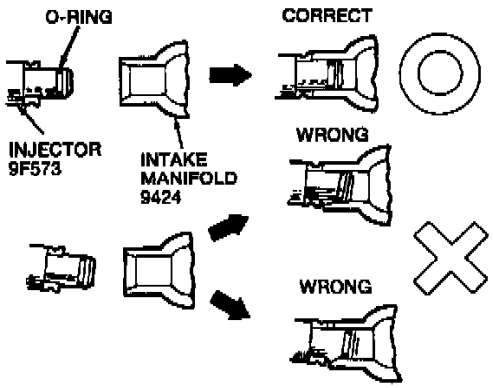

Injector and Grommet Position

1. Position the grommets and new O-rings onto the fuel injectors. Apply a small amount of clean engine oil to the O-rings during installation.

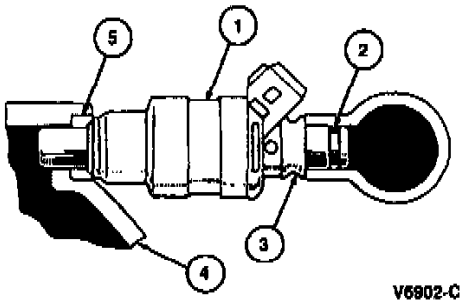

Item	Description
1	Fuel Injector
2	O-Ring
3	Insulator
4	Intake Manifold
5	Insulator

Injector

2. Position the insulators and fuel injectors in the intake manifold.
3. Position the grommets and fuel rail on the injectors.
4. Install the fuel rail attaching bolts and torque to **19-25 Nm (14-18 lb in)**.
5. Connect the fuel pressure regulator vacuum line.
6. Connect the fuel lines to the pressure regulator and the fuel injection supply manifold and torque to **8-11 Nm (71-97 lb in)**.
7. Install the fuel line mounting bracket.
8. Connect the fuel injector wiring harness.
9. connect the negative battery cable.

Fuel Return Line: Service and Repair

Nylon Fuel Lines

Splicing Nylon to Nylon

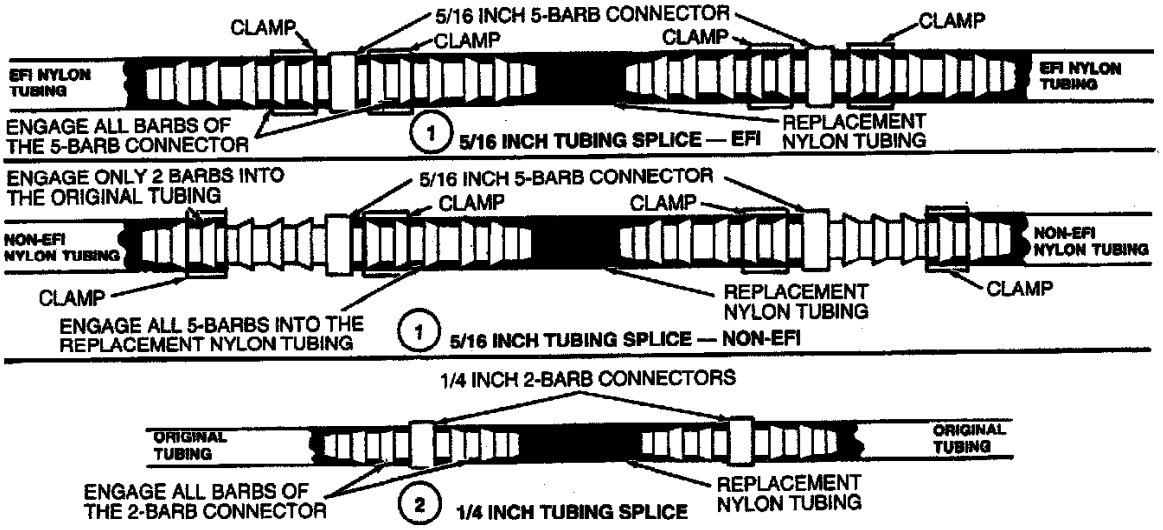

PART NUMBER	DESCRIPTION	QUANTITY	USAGE REFER TO FUEL LINE SERVICE PARTS
N803431	UNION—5 BARB STEEL—5/16 INCH	2 PER VEHICLE	1
N803430	UNION—2-BARB STEEL—1/4 INCH	2 PER VEHICLE	2
N809613	TUBE—5/16 INCH BULK NYLON	AS NECESSARY	3
N809615	TUBE—1/4 INCH BULK NYLON	AS NECESSARY	3
377931	CLAMP (FOR 5/16 INCH 5-BARB CONNECTIONS)	2 PER SPLICE	8
390080-S43	UNION—FLARELESS 1/4 INCH BODY	1 PER VEHICLE	4
390081-S100	SLEEVE—1/4 INCH FLARELESS	2 PER VEHICLE	4
390082-S101	NUT—1/4 INCH FLARELESS	2 PER VEHICLE	4
389351-S43	UNION—FLARELESS 5/16 INCH BODY	1 PER VEHICLE	4
389222-S100	SLEEVE—5/16 INCH FLARELESS	2 PER VEHICLE	4
388921-S101	NUT—5/16 INCH FLARELESS	2 PER VEHICLE	4
9312	TUBE 1/4 INCH STEEL WITH PUSH CONNECT ENDS	1 PER VEHICLE	5
9312	TUBE 5/16 INCH STEEL WITH PUSH CONNECT ENDS	1 PER VEHICLE	5
9B337	TUBE ASSY 1/4 INCH PUSH CONNECT W/18 INCH NYLON	1 PER VEHICLE	6
9289	TUBE ASSY 5/16 INCH PUSH CONNECT W/18 INCH NYLON	1 PER VEHICLE	6
9289	TUBE ASSY 5/16 INCH ELBOW W/18 INCH NYLON	1 PER VEHICLE	7

Splicing Service Combinations

1. Relieve fuel system pressure. If necessary, drain fuel tank.
2. Cut out damaged section of tubing and retain as a guide.
3. Cut a section of service tubing (type 11 or 12 nylon available in 1/4 and 5/16-inch sizes) to the same length as the damaged section of tubing.

   NOTE: To make hand-insertion of the barbed connectors into the nylon easier, the tube end must be soaked in a cup of boiling water for one minute immediately before pushing the barbs into the nylon.

   CAUTION: Do not use any heating method except hot water to repair nylon tubing. Temperatures above 100°C (212°F) cause the nylon to soften and will not seal on the barbed connectors. Replacing nylon line in the engine compartment requires heat protective Hypalon hose.
4. Select the proper (1/4 or 5/16-inch) barbed connectors for completing the splice. Two connectors are required for each splice.
5. Install the barbed connectors into each end of the replacement tubing using boiling water.
6. Install clips onto any tubes which might be difficult to access once the final splices are completed.
7. Install four keystone clamps loosely onto the original nylon tubing before beginning Step 8.
8. Complete the splice of the replacement nylon to the original nylon tubing at both ends. Refer to the illustration.
9. Tighten the clamps in the locations shown in the illustration.
10. Install any remaining clips which were removed for service and check that the tubes are secured in the original clips.

11. Fill fuel tank, start engine and check for leaks.

Fuel Return Line: Service and Repair

Steel Fuel Lines

NOTE

- The tubes attached to the vehicle underbody may be serviced and repaired. The metal underbody tubes must be cut and formed out of rolls of fuel system service tubing available at the dealerships.
- A damaged section of tubing can be cut out of the existing line and replaced by a comparable service tubing section, spliced into the line by means of threaded fasteners and connectors.
- All replacement hoses must be serviced as assemblies. Refer to push connect fitting installation for connecting procedure. Bulk fuel hose must not be used to service tubing in high-pressure fuel systems.

REMOVAL

1. Drain the fuel from the fuel tank.
2. Disconnect the line(s) at the fuel tank and at the engine. Remove the lines from the holding clips along the underbody. Remove all damaged hoses and tube sections.

INSTALLATION

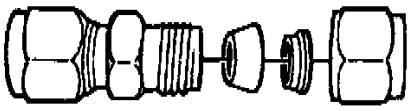

V9043-A

Ferrule

NOTE: After disassembly of the flareless fitting joint, such as at the fuel hose to fuel line connection, the flareless fitting can be reassembled. To reassemble, reconnect the threaded fitting and seat the ferrule to be finger-tight. When the ferrule is seated, draw the nut up approximately one-sixth to one-third of a turn with a wrench to complete the tightening operation.

1. Cut a new section of tubing to approximately the same length as the section to be replaced, allowing for the threaded connectors/fasteners.
2. Bend the tube section to conform to the contour of the original tube.
3. Square the ends of the cut tubing with a file. Remove burrs. Blow out any particles with compressed air.
4. Position the lines in the underbody clips. Do not tighten at this time.
5. Assemble the fitting by sliding the nut over the tubing with threaded (open) end out.
6. Slide the ferrule on the tubing with the cutting edge out; the large head end should be inside of the nut.
7. Lubricate the ferrule and the threads on the fasteners with oil.
8. Bottom the tube in the fining and tighten the nut until the ferrule just grips the tube. When the tube can no longer be turned by hand, the ferrule has started to grip the tube.
9. After the ferrule grips the tube, tighten the nut one full turn.
10. Tighten the fuel line to the underbody clips to secure the fuel lines.
11. Fill the fuel tank and check for leaks.

Fuel Tank: Service and Repair

WARNING: Do not smoke, carry lighted tobacco or open flame of any type when working on or near any fuel related component. Highly flammable mixtures are always present and may be ignited, resulting in possible personal injury.

CAUTION: Fuel supply lines will remain pressurized for long periods of time after engine shut down. This pressure must be relieved before servicing of the fuel system is begun. A valve is provided on the throttle body for this purpose. Remove the air cleaner and relieve system pressure by using Rotunda pressure gauge tool T80L-9974-A or equivalent and drain the system through the drain tube.

REMOVAL

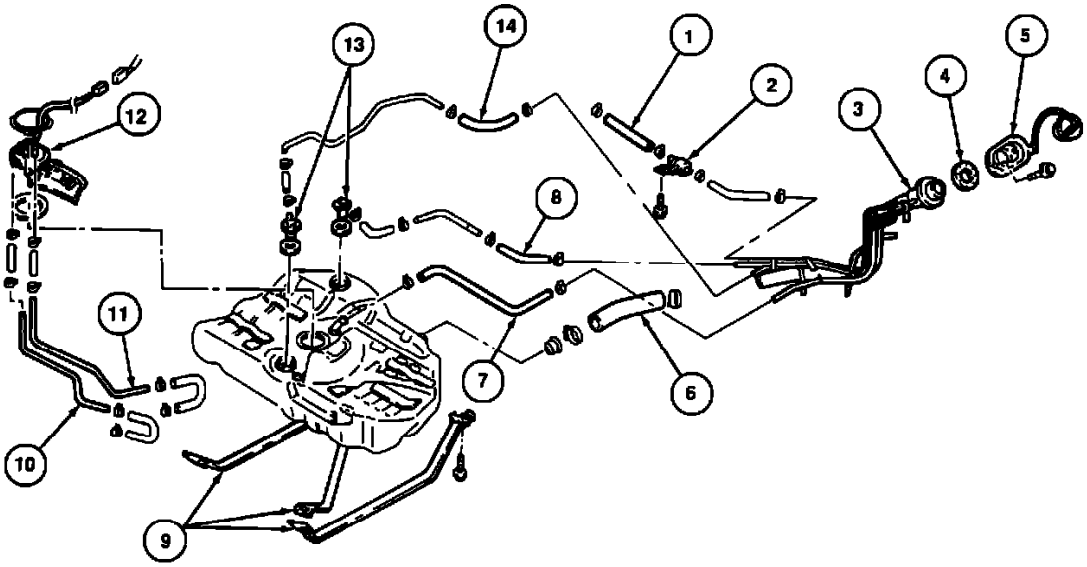

Item	Part Number	Description
1	—	Fuel Vapor Front Hose
2	9G332	Fuel Vapor Tube Shut Off Valve
3	9034	Fuel Tank Filler Pipe
4	9072	Fuel Tank Filler Pipe Seal
5	—	Filler Pipe Mounting Bracket
6	9047	Fuel Tank to Filler Pipe Hose
7	9324	Fuel Tube Hose

Item	Part Number	Description
8	—	Fuel Vapor Valve Hose
9	9092	Fuel Tank Support Strap
10	—	Fuel Supply Tube
11	9A337	Fuel Return Tube
12	9350	Fuel Pump
13	9B593	Fuel Vapor Valve
14	—	Fuel Vapor Valve Hose

Fuel System

1. Relieve the fuel pressure.
2. Disconnect the battery ground cable.
3. Drain the fuel from the fuel tank.
4. Raise and support the vehicle.

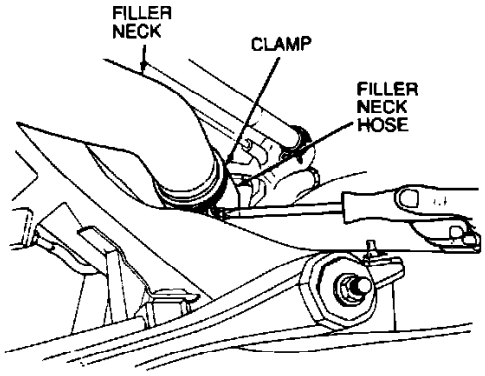

Filler Neck Clamp

5. Loosen the hose clamp and remove the fuel tank to filler pipe hose.

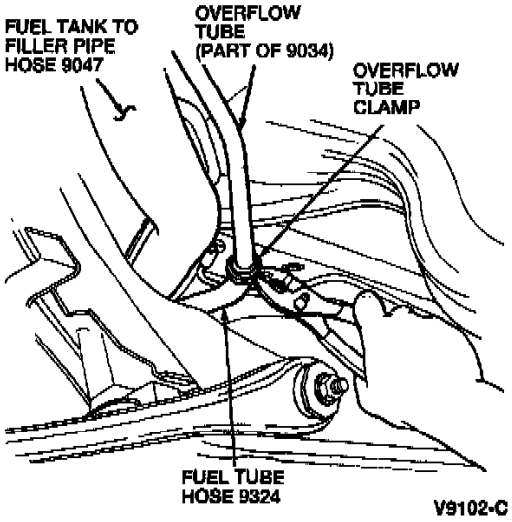

Filler Pipe

6. Loosen the overflow tube clamp and remove the fuel tube hose.
7. Loosen the fuel supply tube clamp and remove the fuel supply tube.
8. Loosen the fuel return tube clamp and remove the fuel return tube.
9. Loosen the two fuel tank vent tube clamps and remove the fuel tank vent tubes.
10. Disconnect the fuel pump electrical connector from the body harness mating connector.

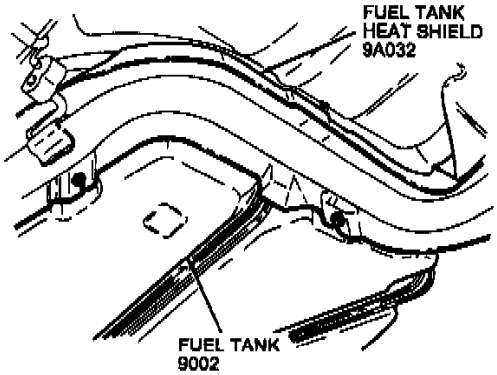

Fuel Tank Heat Shield

11. Remove the four nuts on the fuel tank heat shield.
12. Remove the one nut on the fuel tank shield.

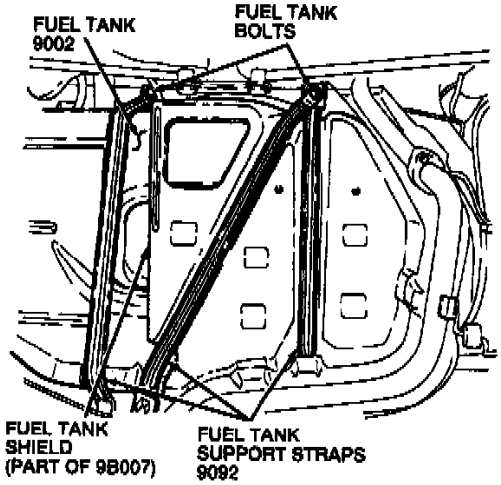

Fuel Tank And Related Components

13. Support the fuel tank and remove the center fuel tank support strap bolt.
14. Remove the right hand fuel tank support strap bolt.

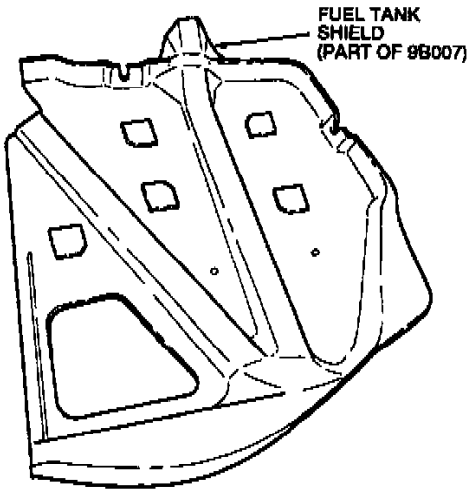

Fuel Tank Shield

15. Remove the fuel tank shield.
16. Remove the left side fuel tank support strap bolt.

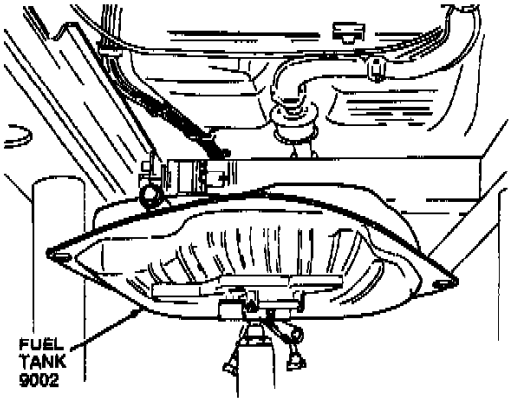

Fuel Tank

17. Remove the fuel tank.

WARNING: Before repairing, clean the fuel tank thoroughly with steam or other approved method to sufficiently remove all explosive gas.

NOTE: Check the fuel tank for cracks and corrosion. If any defect is found, repair or replace the fuel tank.

INSTALLATION

NOTE: Do not apply excessive force to the bottom of fuel tank with the jack. This could bend the fuel pump bracket inside the fuel tank.

To install, reverse the removal procedure. Check the fuel tank for leaks.

Fuel Gauge Sender: Pinpoint Tests

Symptom Chart — Fuel Gauge and Low Fuel Warning System

CONDITION	POSSIBLE SOURCE	ACTION
• Fuel Gauge Always Reads Empty	• Blown fuse. • Circuit. • Fuel sending unit. • Fuel indicator module. • Fuel gauge.	• GO to FG1.
• Fuel Gauge Not Reading Correctly	• Circuit. • Fuel sending unit. • Fuel indicator module. • Fuel gauge.	• GO to FG1.
• Fuel Gauge Always Reads Full	• Circuit. • Fuel sending unit. • Fuel indicator module. • Fuel gauge.	• GO to FG1.
• Low Fuel Warning Lamp Does Not Work	• Circuit. • Fuel indicator module. • Low fuel warning lamp bulb.	• GO to FG15.
• Low Fuel Warning Lamp Works Continuously	• Circuit. • Fuel indicator module.	• GO to FG16.

Pinpoint Tests — Fuel Gauge and Low Fuel Warning System

TEST STEP		RESULT	▶	ACTION TO TAKE
FG1	CHECK FUSE			
	• Check the 15A METER fuse located in the interior fuse panel. • **Is the fuse OK?**	Yes No	▶ ▶	GO to FG4. GO to FG2.
FG2	CHECK SYSTEM			
	• Key OFF. • Replace the 15A METER fuse. • Key ON. • Inspect the fuse. • **Does the fuse fail again?**	Yes No	▶ ▶	GO to FG3. GO to FG4.

Fig. 6 Fuel Indicating System Diagnosis (Part 1 Of 5). 1993 Probe

TEST STEP		RESULT	ACTION TO TAKE
FG3	CHECK FOR SHORT TO GROUND		
	• Key OFF. • Locate and disconnect the 14-pin interior fuse panel connector. • Locate and disconnect the 14-pin instrument cluster connector. • Measure the resistance of the "BK/Y" wire between the 14-pin interior fuse panel connector and ground. • **Is the resistance less than 5 ohms?**	Yes ▶ No ▶	SERVICE the "BK/Y" wire between the interior fuse panel and the instrument cluster. RECONNECT the interior fuse panel. GO to FG4.

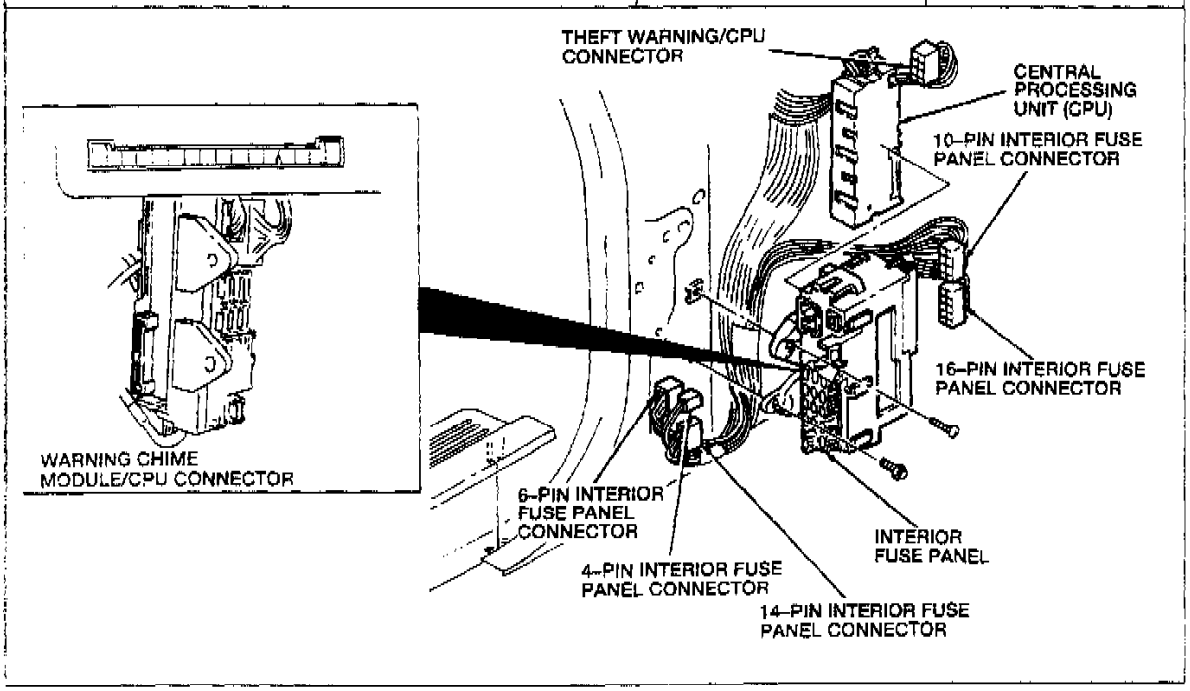

Fig. 6 Fuel Indicating System Diagnosis (Part 2 Of 5). 1993 Probe

TEST STEP	RESULT	ACTION TO TAKE
FG4 CHECK SIGNAL FROM FUEL SENDING UNIT		
• Key OFF. • Locate and disconnect the fuel pump assembly connector. • Connect Rotunda Instrument Gauge System Tester 021-00055 or equivalent between the "R" wire on the fuel pump assembly connector and ground. • Key ON. • Adjust the instrument gauge system tester to the resistances shown in chart. NOTE: The fuel gauge system is equipped with a fuel indicator circuit. Therefore, the instrument gauge tester must remain at the specified resistance for approximately 1 minute to allow the fuel gauge to read the proper level. • **Is the fuel gauge and low fuel warning lamp operating properly?**	Yes No	▶ GO to FG5. ▶ GO to FG6.
FG5 CHECK FUEL SENDING UNIT GROUND		
• Key OFF. • Disconnect the fuel pump assembly connector. NOTE: The "Y" wire changes to a "BK" wire at an in-line connector. • Measure the resistance of the "Y" wire between the fuel pump assembly connector and ground. • **Is the resistance less than 5 ohms?**	Yes No	▶ REPLACE the fuel sending unit. ▶ SERVICE the "Y" or "BK" wire.
FG6 CHECK POWER SUPPLY TO INSTRUMENT CLUSTER		
• Key OFF. • Disconnect the 14-pin instrument cluster connector. • Key ON. • Measure the voltage on the "BK/Y" wire at the 14-pin instrument cluster connector. • **Is the voltage greater than 10 volts?**	Yes No	▶ GO to FG7. ▶ SERVICE the "BK/Y" wire between the instrument cluster and the interior fuse panel.
FG7 CHECK CIRCUIT TO FUEL INDICATOR MODULE AND LOW FUEL WARNING LAMP		
• Key OFF. • Disconnect and remove the instrument cluster. • Locate and disconnect the fuel indicator module on the back of the instrument cluster. • Locate and disconnect the low fuel warning lamp bulb. • Measure the resistance of the circuit between pin 1F of the instrument cluster and pin F of the fuel indicator module. • Measure the resistance of the circuit between pin 1F of the instrument cluster and the low fuel warning lamp bulb connector. • **Are the resistances less than 5 ohms?**	Yes No	▶ GO to FG8. ▶ REPLACE the instrument cluster printed circuit board.

Fuel Gauge	Resistance (ohms)
F	7.0
3/4	19.0
1/2	35.0
1/4	65.0
E	105.0
Low Fuel Warning Lamp On	90.0

Fig. 6 Fuel Indicating System Diagnosis (Part 3 Of 5). 1993 Probe

TEST STEP		RESULT	ACTION TO TAKE
FG8	CHECK INSTRUMENT CLUSTER GROUND		
	• Key OFF. • Disconnect and remove the instrument cluster. • Measure the resistance of the "BK" wire between the instrument cluster connector pin 1I and ground. • **Is the resistance less than 5 ohms?**	Yes No	GO to FG9. SERVICE the "BK" wire.
FG9	CHECK GROUND TO FUEL INDICATOR MODULE AND FUEL GAUGE		
	• Key OFF. • Disconnect and remove the instrument cluster. • Measure the resistance of the circuit between the instrument cluster connector terminal pin 1I and the fuel indicator module connector pin C. • Measure the resistance of the circuit between the instrument cluster connector terminal 1I and the fuel gauge "-" terminal. • **Are the resistances less than 5 ohms?**	Yes No	GO to FG10. REPLACE the instrument cluster printed circuit board.
FG10	CHECK WIRE BETWEEN INSTRUMENT CLUSTER AND FUEL PUMP ASSEMBLY		
	• Key OFF. • Disconnect the 14-pin instrument cluster connector. • Disconnect the fuel pump assembly connector. • Measure the resistance between the "Y" wire of the 14-pin instrument cluster connector and the "R" wire of the fuel pump assembly connector. • **Is the resistance less than 5 ohms?**	Yes No	GO to FG11. SERVICE the "R" and/or the "Y" wire(s) in question.
FG11	CHECK FOR SHORT BETWEEN INSTRUMENT CLUSTER AND FUEL PUMP ASSEMBLY		
	• Key OFF. • Disconnect the 14-pin instrument cluster connector. • Disconnect the fuel pump assembly connector. • Measure the resistance of the "Y" wire between the 14-pin instrument cluster connector and ground. • **Is the resistance greater than 10,000 ohms?**	Yes No	GO to FG12. SERVICE the "Y" wire.
FG12	CHECK FUEL SENDING UNIT INPUT TO FUEL GAUGE AND FUEL INDICATOR MODULE		
	• Key OFF. • Disconnect and remove the instrument cluster. • Disconnect the fuel indicator module connector. • Measure the resistance of the circuit between the instrument cluster pin 1H and the fuel indicator module connector pin A. • Measure the resistance of the circuit between the instrument cluster pin 1H and the fuel gauge pin F. • **Are the resistances less than 5 ohms?**	Yes (checking fuel gauge) Yes (checking low fuel warning lamp) No	GO to FG13. GO to FG15. REPLACE the instrument cluster circuit board.
FG13	CHECK CIRCUIT BETWEEN FUEL INDICATOR MODULE AND FUEL GAUGE		
	• Key OFF. • Disconnect and remove the instrument cluster. • Disconnect the fuel indicator module connector on the back of the instrument cluster. • Measure the resistance of the circuit between the fuel indicator module connector pin B and the fuel gauge "+" terminal. • **Is the resistance less than 5 ohms?**	Yes No	GO to FG14. REPLACE the instrument cluster printed circuit board.

Fig. 6 Fuel Indicating System Diagnosis (Part 4 Of 5). 1993 Probe

TEST STEP		RESULT	ACTION TO TAKE
FG14	CHECK FUEL INDICATOR MODULE		
	• Key OFF. • Reconnect the fuel indicator module. • Disconnect the 16-pin instrument cluster connector. Leave the 14-pin instrument cluster connected. • Remove the "+" screw of the fuel gauge. • Key ON. • Measure the voltage on the "+" terminal of the fuel gauge on the instrument cluster printed circuit board. • **Is the voltage greater than 10 volts?**	Yes No	REPLACE the fuel gauge. REPLACE the fuel indicator module.
FG15	CHECK LOW FUEL WARNING LAMP BULB		
	• Key OFF. • Remove and remove the instrument cluster. • Remove the low fuel warning lamp bulb. • Measure the resistance across the terminals of the low fuel warning lamp bulb. • **Is the resistance approximately 12.6 ohms?**	Yes No	GO to FG16. REPLACE the low fuel warning lamp bulb.
FG16	CHECK CIRCUIT BETWEEN FUEL INDICATOR MODULE AND LOW FUEL WARNING LAMP		
	• Key OFF. • Disconnect and remove the instrument cluster. • Remove the low fuel warning lamp bulb. • Disconnect the fuel indicator module connector on the back of the instrument cluster. • Measure the resistance of the circuit between the fuel indicator module connector pin D and the low fuel warning lamp bulb connector. • **Is the resistance less than 5 ohms?**	Yes No	REPLACE the fuel indicator module. REPLACE the instrument cluster printed circuit board.

Fig. 6 Fuel Indicating System Diagnosis (Part 5 Of 5). 1993 Probe

Fuel Gauge Sender: Component Tests and General Diagnostics

The required test equipment consists of a Rotunda Gauge Tester part No. 021-00055 or equivalent, a pair of 10 ohm and 75 ohm resistors or another fuel sender of good known quality.

1. Perform test with resistors as follows:
   a. Disconnect wiring connector at sender unit, then connect resistor between gauge lead and a suitable ground.
   b. Turn ignition switch to On position.
   c. With 10 ohm resistor, the gauge pointer should contact the Full mark.
   d. With 75 ohm resistor, the gauge pointer should contact the Empty mark.
2. Perform test with fuel sender of known quality as follows:
   a. Turn ignition switch to Off position.
   b. Disconnect wiring connector from sender and connect it to test sender.
   c. Move float rod away from fuel filter against Full stop position. Wait approximately 30 seconds, then turn ignition switch to On position. The gauge should read on or above the Full mark.
   d. Move float rod toward fuel filter against Empty stop position. Turn ignition switch to Off position. Wait approximately 30 seconds, then turn ignition switch to On position. The gauge should read on or below the Empty mark.
   e. If gauge performs as indicated, perform fuel sender unit tests. Refer to **System Diagnosis** for fuel sender unit tests.
   f. If gauge is out of calibration at the Empty mark, or both the Empty and Full mark, replace gauge.

Idle Air Control (IAC) Valve: Description and Operation

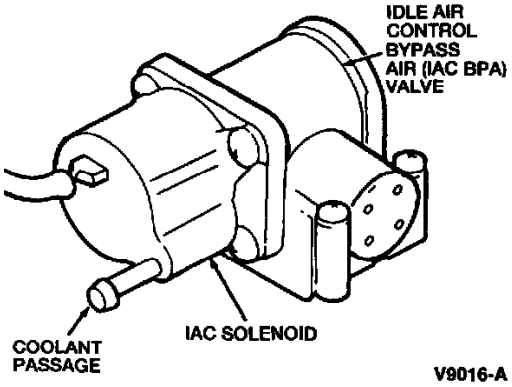

PURPOSE

The Idle Speed Control Bypass Air **(ISC-BPA)** valve is a component of the idle speed control system. It regulates the amount of intake air allowed to bypass the throttle valve in accordance with engine coolant temperature and signals sent by the Powertrain Control Module (**PCM**).

CONSTRUCTION

The ISC-BPA valve is composed of two separate elements. The ISC is a duty cycle solenoid which is operated by the PCM. The BPA is a thermowax type valve that responds to changes in engine coolant temperature.

OPERATION

During cold engine operation the BPA allows additional airflow to bypass the throttle plate to increase the idle speed. As the coolant warms up the thermowax bulb in the BPA expands and shuts off the airflow. The PCM then begins to control idle speed by varying the duty cycle to the ISC.

Idle Air Control (IAC) Valve: Service and Repair

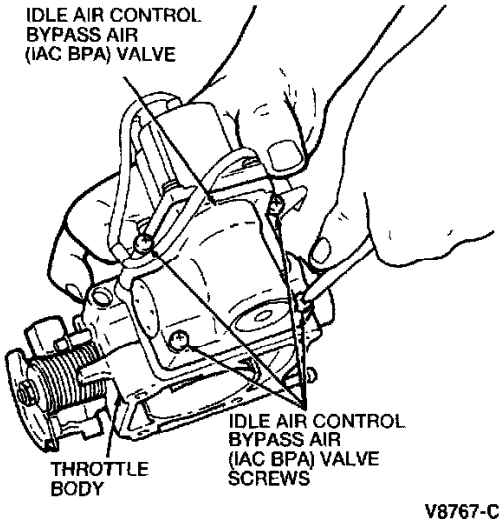

REMOVAL

1. Remove the air cleaner to intake manifold tube.
2. Remove the throttle body.
3. Remove the Idle Air Control Bypass Air **(IAC BPA)** valve retaining screws and remove the IAC BPA valve.

INSTALLATION

1. To install, reverse the removal procedure
2. Tighten the IAC BPA valve retaining screws to **2.5-3.5 Nm (22-31 in lb).**

Fuel Pump Inertia Switch: Description and Operation

PURPOSE

The inertia switch is used to shut the fuel pump "OFF" in the event of a collision.

OPERATION

When a sharp impact occurs, the ball breaks loose from the magnet, rolls up a conical ramp and strikes a target plate. This opens the electrical contacts of the switch and disrupts power to the electric fuel pump. The engine will quit running within a few seconds after the fuel pump looses power. The inertia switch must then be manually reset before the engine can be restarted.

CONSTRUCTION

The inertia switch consists of a steel ball held in place by a magnet.

WARNING: DO NOT reset the inertia switch button if you see or smell fuel.

Rollover Valve: Description and Operation

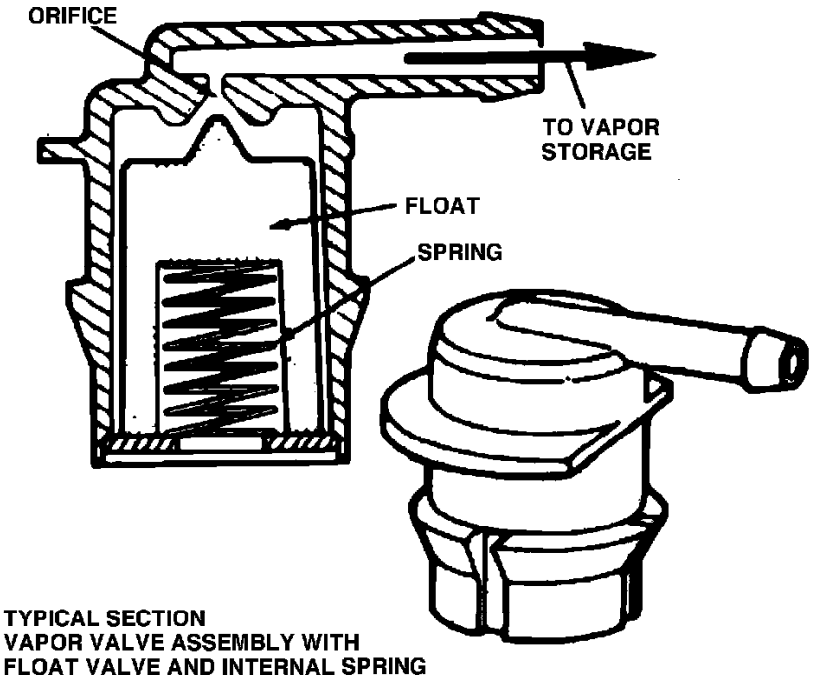

Fig. 47 Fuel tank vapor valve

PURPOSE

Permits fuel vapors to be vented to the charcoal canister, while restricting liquid fuel.

In the event of vehicle roll-over, the float closes off the valve, preventing fuel from escaping and saturating the charcoal canister.

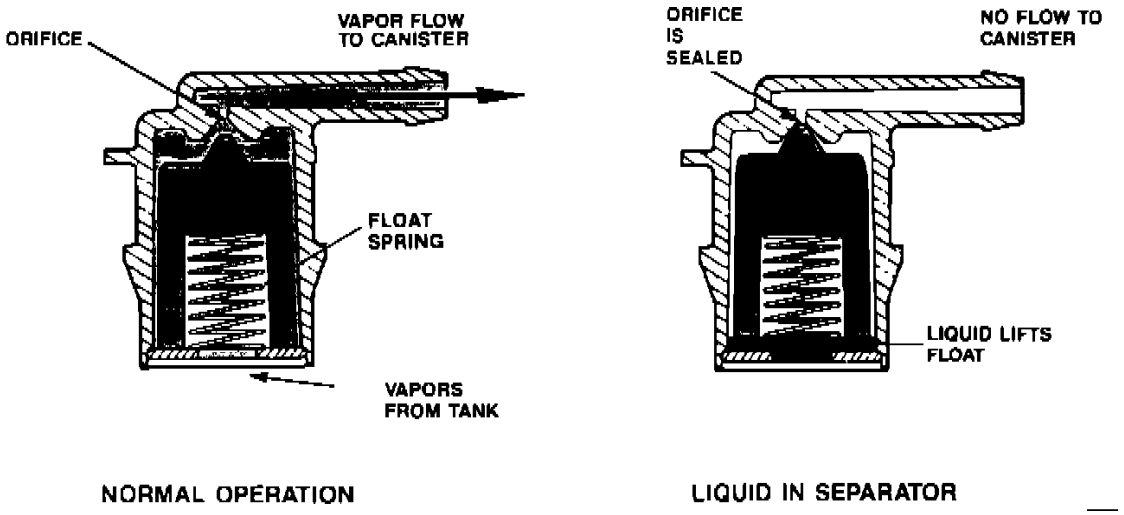

Fuel Tank Fuel/Vapor Separator Operation

OPERATION

Fuel vapors are generated, they enter the valve from the bottom, rise upward past the float, and out through a single vapor line.

If liquid fuel should enter the valve assembly, the float will rise upward and close the orifice. As the fuel is drained back into the fuel tank, the spring attached to the underside of the valve pulls the float downward, exposing the orifice.

NOTE: In the event of vehicle roll-over, the float closes off the valve, preventing fuel from escaping and saturating the charcoal canister.

Throttle Position Sensor: Description and Operation
Manual Transaxle

PURPOSE

The Throttle Position **(TP)** sensor is a rotary potentiometer that determines throttle plate angle. The Powertrain Control Module **(PCM)** determines operating modes from the TP signal. These are:

- Closed throttle; idle or deceleration
- Part throttle; cruise or moderate acceleration
- Wide open throttle; maximum acceleration, dechoke on crank and A/C cutout
- Throttle angle rate; acceleration pump type function
- Transmission shift schedule

CONSTRUCTION

The TP sensor is mounted on the throttle body and is directly linked to the throttle shaft. The TP sensor is composed of a wiper arm that moves along a curved resistor.

OPERATION

The TP sensor measures travel of the throttle shaft to produce a continuously variable output signal proportional to the throttle plate position.

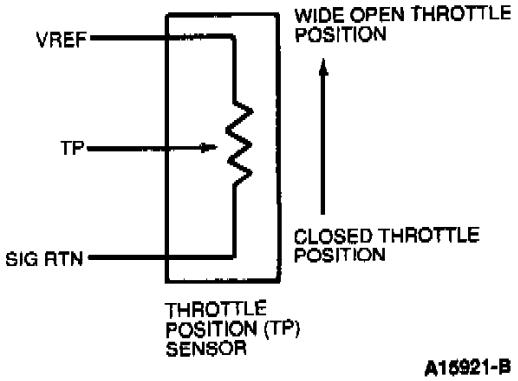

Throttle Position Sensor Schematic

The potentiometer functions as a voltage divider. A 5.0 volt reference signal is applied to one end (VREF) of a curved resistance material, with the other end grounded along the SIG RTN circuit.

The TP sensor output signal is taken off a wiper arm (mechanically linked to the throttle shaft) that travels along the entire length of the curved resistor

At closed throttle the TP wiper arm is nearer the ground side of the resistor resulting in a lower output, 0.6 volts at 0% throttle angle.

At wide open throttle the TP wiper arm is nearer the reference voltage side of the resistor resulting in a higher output, 4.5 volts at 85% throttle angle.

RELATED DIAGNOSTIC TROUBLE CODES

DTC 23/121 - TP sensor output is out of the self-test range.

DTC 63/122 - TP sensor output is below the minimum self-test value.

DTC 53/123 - TP sensor output is above the maximum self-test value.

DTC 124 - TP sensor output is higher than expected.

DTC 125 - TP sensor output is lower than expected.

Note: DTC 124, 125 were intended to detect in-range failures of the TP sensor. The PCM compares information from the Mass Air Flow (MAF) sensor, TP sensor, and fuel injection pulse width. If any one value appears to be out of line with the other two an in-range trouble code will be set.

Throttle Position Sensor: Adjustments

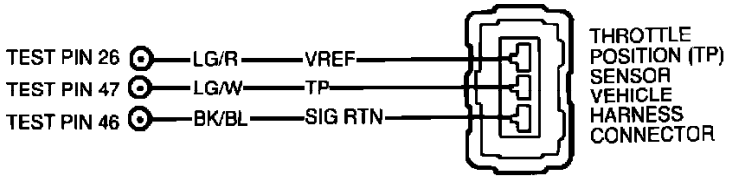

Throttle Position Sensor Schematic

CHECK THROTTLE POSITION SENSOR OUTPUT

1. Connect the Rotunda Breakout Box 014-00322 to the powertrain control module.
2. Turn the ignition switch (11572) to the ON position.
3. Measure the voltage between breakout box pin 47 and pin 46 SIG RTN (ground).
4. Rotate the throttle linkage by hand and observe the voltage readings.
5. With the throttle valve fully closed, the voltage must measure **0.5 volts.**
6. With the throttle valve fully open, the voltage must measure **4.1 volts.**

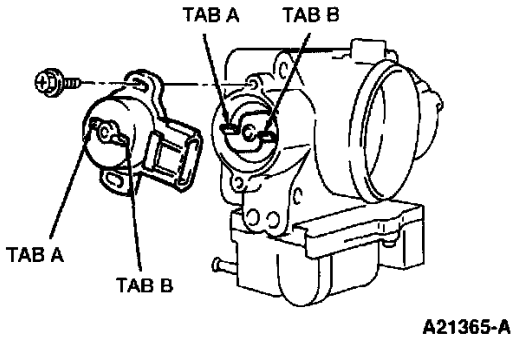

Throttle Position Sensor

THROTTLE POSITION SENSOR ADJUSTMENT

NOTE: If the voltage is not within specifications, adjust the Throttle Position Sensor **(TP)** as follows:

1. Loosen the TP sensor set screws.
2. With the throttle valve fully closed, rotate the TP sensor until the voltage is **0.1-1.1 volts.**
3. With the throttle valve fully open, verify that the voltage is **3.1-4.4 volts.**
4. Tighten the TP sensor set screws to **2 Nm (14-20 in lb).**

Throttle Position Sensor: Service and Repair

NOTE: The Throttle Position **(TP)** Sensor is not serviceable. If the sensor is faulty, the throttle body assembly must be replaced as a unit.

REMOVAL

1. Remove air intake system.
2. Disconnect TP sensor, idle air control bypass air **(IAC BPA)** valve, and idle switch, if equipped.
3. Disconnect throttle cable.
4. Disconnect throttle body coolant line.
5. Disconnect IAC BPA coolant line.
6. Disconnect vacuum lines from throttle body.
7. Remove throttle body mounting bolts and nuts.
8. Remove throttle body.

INSTALLATION

1. Install in reverse order.
2. Tighten throttle body mounting bolts and nuts to **14 - 19 ft lb (19 - 25 Nm).**

Throttle Body: Service and Repair

REMOVAL

1. Remove the air intake system.

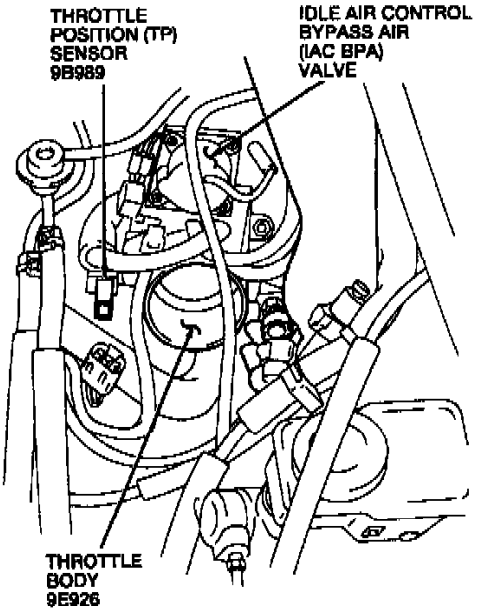

Throttle Body And Related Components

2. Disconnect the Throttle Position **(TP)** sensor, Idle Air Control Bypass Air **(IAC BPA)** valve and the idle switch.

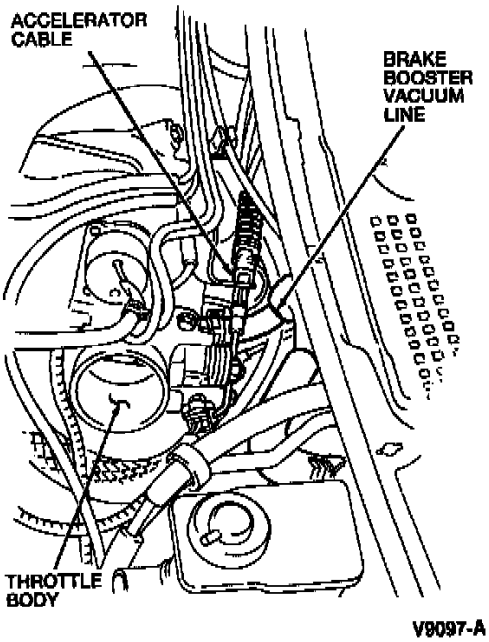

Accelerator Cable

3. Disconnect the throttle cable.
4. Disconnect the throttle body coolant line.
5. Disconnect the IAC BPA coolant line.
6. Disconnect the vacuum lines from the throttle body.
7. Remove the throttle body mounting bolts and nuts.

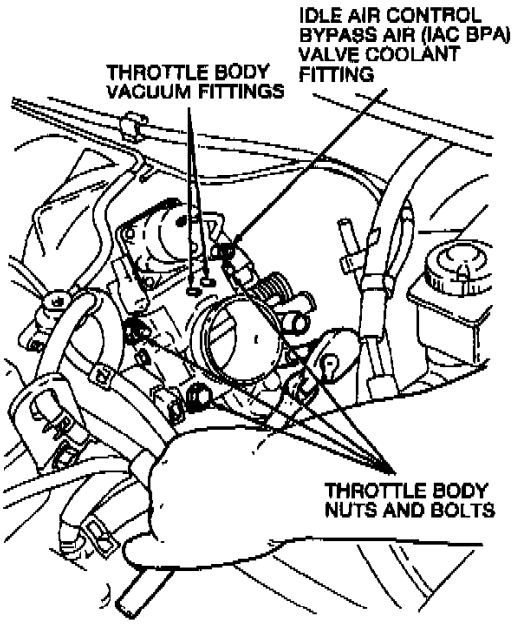

Throttle Body

8. Remove throttle body.

INSTALLATION

1. Install the throttle body mounting bolts and nuts and torque to **19-25 Nm (14-19 ft lb)**.
2. Connect the vacuum lines from the throttle body.
3. Connect the IAC BPA coolant line.
4. Connect the throttle body coolant line.
5. Connect the throttle cable.
6. Connect the TP sensor, IAC BPA valve and the idle switch.
7. Reinstall the air intake system.

Accelerator Cable/Linkage: Adjustments

Free Play

1. Verify that the throttle valve is fully closed.
2. Measure the free play at the accelerator pedal. Free play should be **1.5-4.5 mm (0.060-0.180 inch)**.

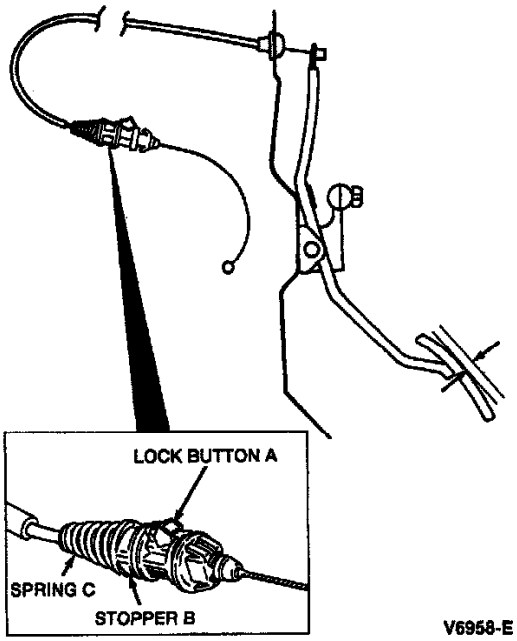

Accelerator Cable Freeplay

3. If adjustment is necessary. turn stopper (B) while pressing lock button (A) to release the lock.
4. Push the spring (C) towards lock button (A) and adjust the cable free play.
5. After the proper free play is achieved, lock the stopper (B), then the lock button (A).
6. Adjust the wide open throttle position.

Wide Open Throttle Position

1. Adjust the accelerator pedal shaft lever free play.
2. Depress the accelerator pedal shaft lever all the way to the floor.
3. Confirm that the throttle plates in the throttle body are in the wide open position.

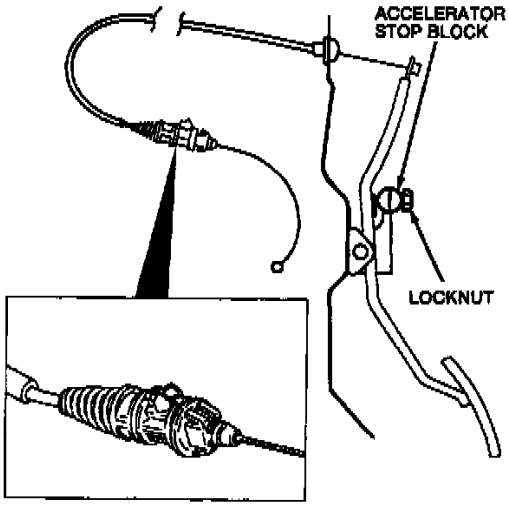

Accelerator Cable

4. If adjustment is necessary, loosen the locknut and adjust the wide open throttle position at the accelerator stop block on the accelerator shaft retainer.

5. Tighten the locknut after the adjustment is completed.

Accelerator Cable/Linkage: Service and Repair

REMOVAL

1. Remove accelerator cable from the accelerator lever.
2. Remove accelerator cable from the accelerator cable mounting bracket.

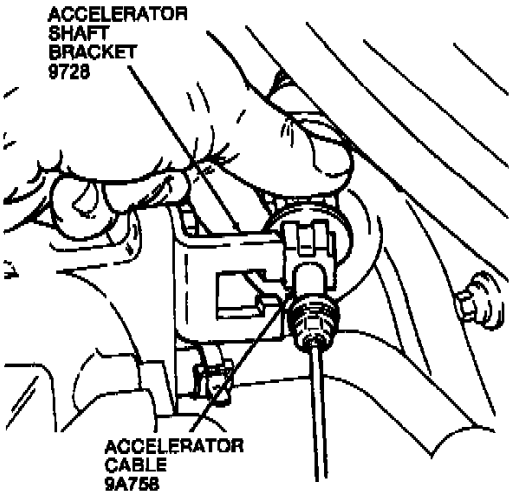

Accelerator Shaft Bracket

3. Squeeze the lock tabs and remove the accelerator cable end from the accelerator pedal assembly.

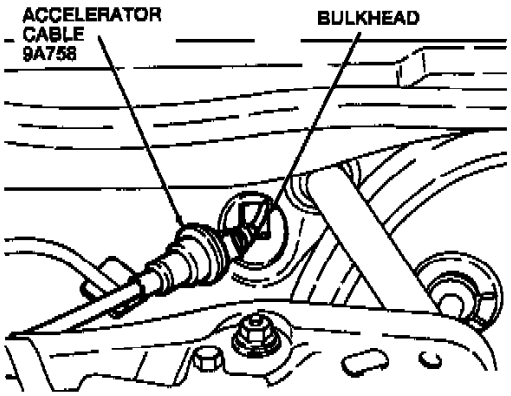

Accelerator Cable

4. Squeeze the lock tabs securing the accelerator cable housing to the bulkhead and remove the accelerator cable assembly.

INSTALLATION

1. Position the accelerator cable housing into the hole in the bulkhead and snap it into place.
2. Install the accelerator cable end on the accelerator pedal assembly and snap it into place.
3. Install the accelerator cable in the accelerator cable mounting bracket.
4. Install the accelerator cable end on the accelerator lever.
5. Adjust the pedal free play and the wide-open throttle position.

Computers and Control Systems: Description and Operation
Automatic Transaxle

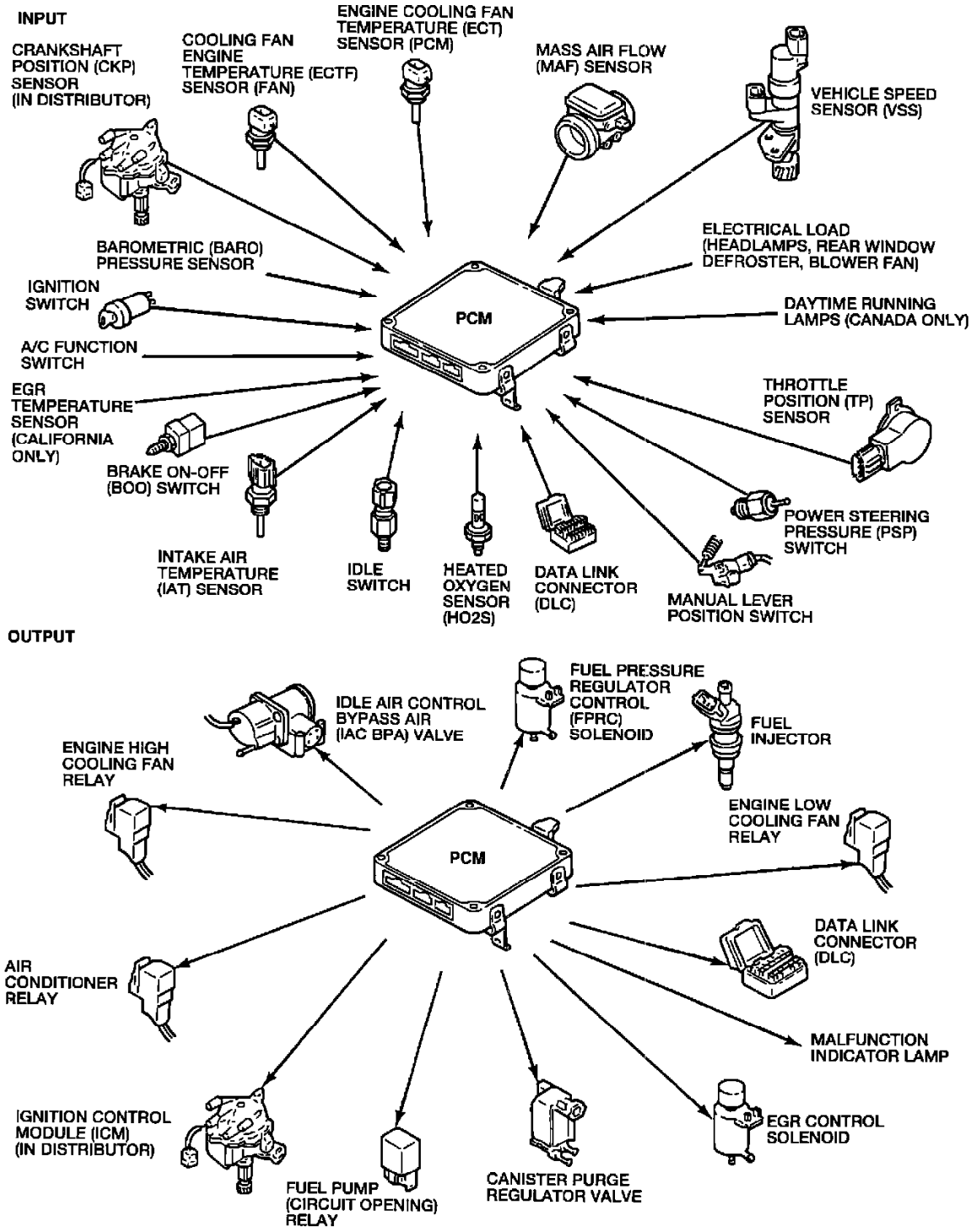

Inputs And Outputs

GENERAL SYSTEM OPERATION

The Powertrain Control Module (PCM) processes input data from sensors, producing output control signals to the fuel injectors, regulating precise fuel delivery through the injectors. The PCM also produces output signals that adjust ignition spark timing to provide the best balance between driveability and fuel economy. A temperature sensor inserted into the engine coolant system gives information on engine temperature. A throttle switch senses throttle plate position and produces, then transmits an electrical signal to tell the PCM when the throttle is in the CLOSED or WIDE-OPEN position. An exhaust gas sensor in the exhaust manifold measures the amount of free oxygen remaining in the exhaust stream, indicating cylinder combustion efficiency. Crankshaft position information is transmitted by a crankshaft position sensor, located in the distributor. The EEC system also controls Exhaust Gas Recirculation (EGR), A/C compressor cutoff at wide open throttle, and knock control to eliminate detonation under adverse driving conditions. The operating principles of all EEC systems and related components are essentially the same.

DIAGNOSTIC SELF TEST

The diagnostic self test is divided into four separate tests. They are the KEY ON ENGINE OFF (KOEO) self test, KEY ON ENGINE RUNNING (KOER) self test, SWITCH MONITOR test, and the CONTINUOUS self test. The self test is not a final test by itself, but is used as a part of the functional check. The processor stores the self test program in its permanent memory. When activated, it checks the EEC

system by testing its memory integrity and processing capability, verifying various sensors and actuators are connected and operating properly. The KEY ON ENGINE OFF and KEY ON ENGINE RUNNING self tests are functional tests only detecting faults present at the time of the self test. The SWITCH MONITOR test checks the input signals sent from the engine control system's individual sensors and switches to the PCM. The CONTINUOUS self test is an ongoing test storing fault information in Keep Alive Memory (KAM) for retrieval at a later time.

LIMITED OPERATING STRATEGY

Limited Operating Strategy (LOS) is a back-up strategy in the PCM. Maintaining vehicle operation if one or more inputs fail. When sensor input is perceived to be out of limits by the PCM, it substitutes a fixed in-limit sensor value and continues to monitor the faulty sensor input. If the faulty sensor begins to operate within limits, the PCM will return to normal engine running strategy. When the vehicle is operating in LOS, the CHECK ENGINE light will be ON.

Computers and Control Systems: Description and Operation
Manual Transaxle
GENERAL SYSTEM OPERATION

The EEC-IV system provides accurate, instantaneous fuel metering control of fuel injection timing and duration. A sensor in the intake manifold measures the temperature of incoming air and transmits a corresponding electrical signal. Another temperature sensor inserted into the engine cooling system gives information on engine temperature. A switch senses throttle plate position and produces, then transmits an electrical signal to tell the control unit when the throttle is in the CLOSED or WIDE-OPEN position. An oxygen sensor in the exhaust manifold measures the amount of free oxygen remaining in the exhaust gas, which is an indication of cylinder combustion efficiency and sends a corresponding signal to the control unit. Crankshaft position information is transmitted by a crankshaft position sensor, located either on the crankshaft or in the distributor.
The Powertrain Control Module (PCM) processes the input data from these sensors and produces output control signals to the fuel injectors, regulating precise fuel discharge through the injector nozzles. The microcomputer circuit also produces output signals that adjust ignition spark timing to provide the best balance between driveability and fuel economy.
The EEC-IV system also controls Exhaust Gas Recirculation (EGR), A/C compressor cutoff at wide open throttle, and knock control to eliminate detonation under adverse driving conditions.
The operating principles of all EEC-IV systems and related components are essentially the same. However, in adapting the EEC-IV system to different engines, different combinations of components are required.

DIAGNOSTIC SELF TEST

The diagnostic self test is divided into three separate tests. They are the KEY ON ENGINE OFF self test, the KEY ON ENGINE RUNNING self test, and the CONTINUOUS self test. The self test is not a conclusive test by itself, but is used as a part of the functional check. The processor stores the self test program in its permanent memory. When activated, it checks the EEC-IV system by testing its memory integrity and processing capability, and verifies that various sensors and actuators are connected and operating properly.
The Key On Engine Off (KOEO) and Key On Engine Running (KOER) self tests are functional tests which only detect faults present at the time of the self test. Continuous self test is an ongoing test that stores fault information in Keep Alive Memory (KAM) for retrieval at a later time.

FAILURE MODES EFFECT MANAGEMENT

Failure Modes Effect Management (FMEM) is a back-up strategy in the Powertrain Control Module (PCM) designed to maintain vehicle operation if one or more inputs fail. When a sensor input is perceived to be out of limits by the PCM, an alternative strategy will be initiated.
The PCM will substitute a fixed in limit sensor value and will continue to monitor the faulty sensor input. If the faulty sensor begins to again operate within limits, the PCM will return to normal engine running strategy.
When the vehicle is operating in FMEM, the CHECK ENGINE LIGHT will be ON and a code 98 or 998 will be displayed during self test.

HARDWARE LIMITED OPERATION STRATEGY

IF the EEC-IV system faults are too extreme for the FMEM mode to handle it will go into Hardware Limited Operation Strategy (HLOS). In HLOS mode the software operations have stopped and the PCM is running on hardware control only. The default strategy for this mode has a minimal calibration strictly to allow the vehicle to operate until it can be serviced.

NOTE: In HLOS mode the self test Diagnostic Trouble Codes (DTCs) will not be output.

Computers and Control Systems: Service and Repair

The Powertrain Control Module **(PCM)** stores information about vehicle operating conditions and uses this information to compensate for component tolerances. When an emission related component is replaced, Keep Alive Memory **(KAM)** should be cleared to erase the information stored by the processor from the original component.

To clear the KAM, disconnect the battery negative terminal for five minutes or more. Drive the the vehicle for at least ten miles to allow the PCM to relearn the values for optimum performance.

NOTE: During the ten mile relearn drive, the vehicle may exhibit some driveability symptoms. These should be eliminated when the KAM has relearned the operating values.

Powertrain Control Module: Description and Operation
Manual Transaxle

PURPOSE

The Powertrain Control Module **(PCM)** monitors the signals from various input sensors and calculates the proper operating strategy for the engine operating conditions.

In addition to normal operating strategy the PCM calculates/learns an adaptive strategy that compensates for normal wearing and aging of components.

The PCM also provides for self-diagnostic testing. When the ignition is turned on the PCM is continuously checking its inputs and outputs for values out of specification. Any discrepancies are recorded as diagnostic trouble codes.

The PCM also provides for operator initiated self-tests. These tests check for specific input values and output states under defined conditions.

Note: Incorrect testing conditions and minor procedural deviations often result in false trouble codes and inaccurate information. When initiating self-tests technicians should verify that all required conditions are met.

OPERATION

The PCM continuously monitors input signals and compares these values to calibration information stored in its memory.

The PCM's calibration assembly contains the necessary programming to fine-tune the PCM's engine calibration commands to the vehicle's weight, axle ratio, and transmission application. The calibration assembly is an integral part of the PCM and is not replaceable.

The PCM determines the correct operating strategy and makes the necessary corrections to its output signals.

Powertrain Control Module: Description and Operation
Automatic Transaxle

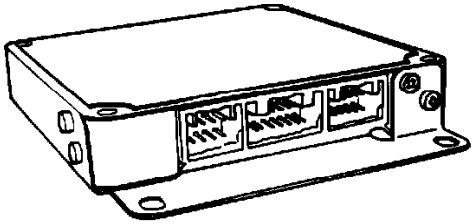

Electronic Control Assembly (ECA)

The Powertrain Control Module (PCM) controls driveablity, emissions, and fuel economy. Based on input data received from sensors, switches, and relays, the PCM generates output signals controlling various relays, solenoids, and actuators.

Powertrain Control Module: Reset Procedure

The Powertrain Control Module **(PCM)** stores information about vehicle operating conditions and uses this information to compensate for component tolerances. When an emission related component is replaced, Keep Alive Memory **(KAM)** should be cleared to erase the information stored by the processor from the original component.

To clear the KAM, disconnect the battery negative terminal for five minutes or more. Drive the the vehicle for at least ten miles to allow the PCM to relearn the values for optimum performance.

NOTE: During the ten mile relearn drive, the vehicle may exhibit some driveability symptoms. These should be eliminated when the KAM has relearned the operating values.

Powertrain Control Module: Removal and Replacement

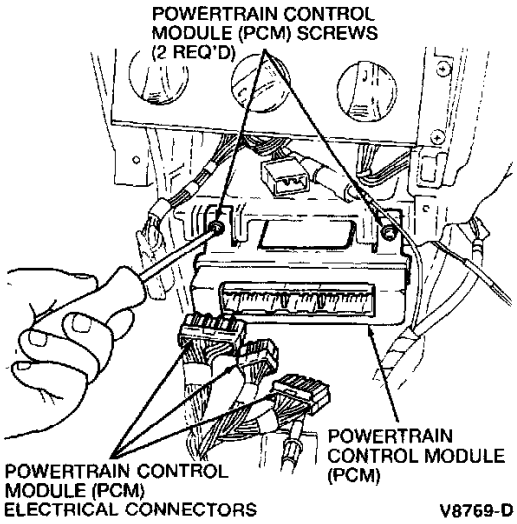

Powertrain Control Module

REMOVAL

CAUTION: Electronic modules are sensitive to static electrical charges. if exposed to these charges damage may result.

1. Disconnect the battery ground cable.
2. Remove the floor console and instrument panel insulator (046A24).
3. Disconnect the engine control sensor wiring connector from the Powertrain Control Module **(PCM).**
4. Remove the two PCM screws.
5. Remove the PCM from the vehicle.

INSTALLATION

1. To install, reverse the removal procedure.
2. Tighten the PCM screws to **3.7 Nm (32 in lb).**

NOTE: When the battery has been disconnected and reconnected, some abnormal drive symptoms may occur while the powertrain control module relearns its adaptive strategy. The vehicle may need to be driven 10 miles or more to relearn the adaptive strategy.

PCM Power Relay: Locations

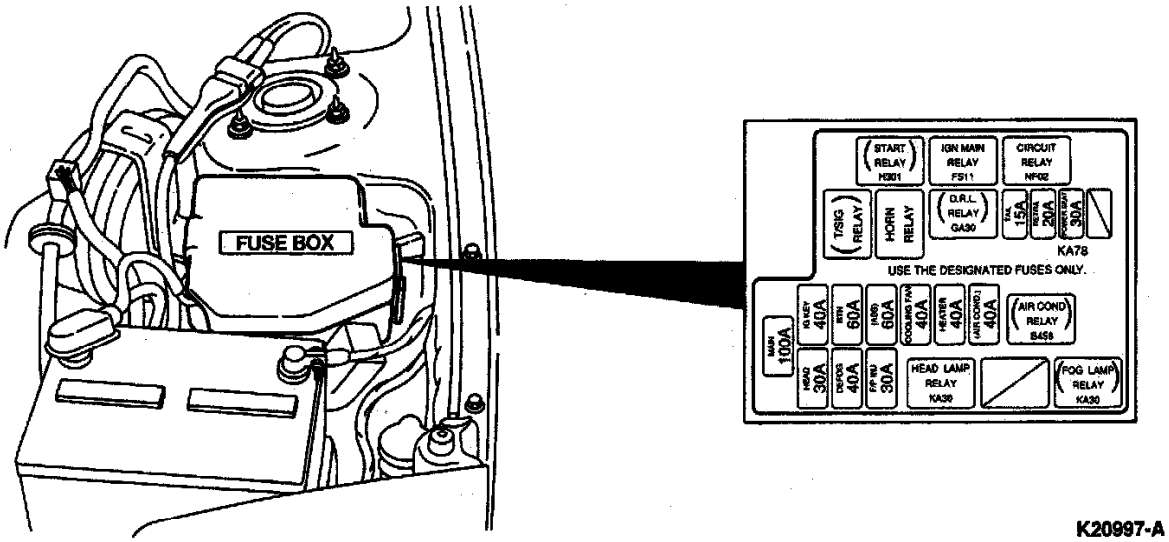

Engine Compartment Fuse Box

FUSE BOX VIEW

Labled as IGN MAIN RELAY FS11.

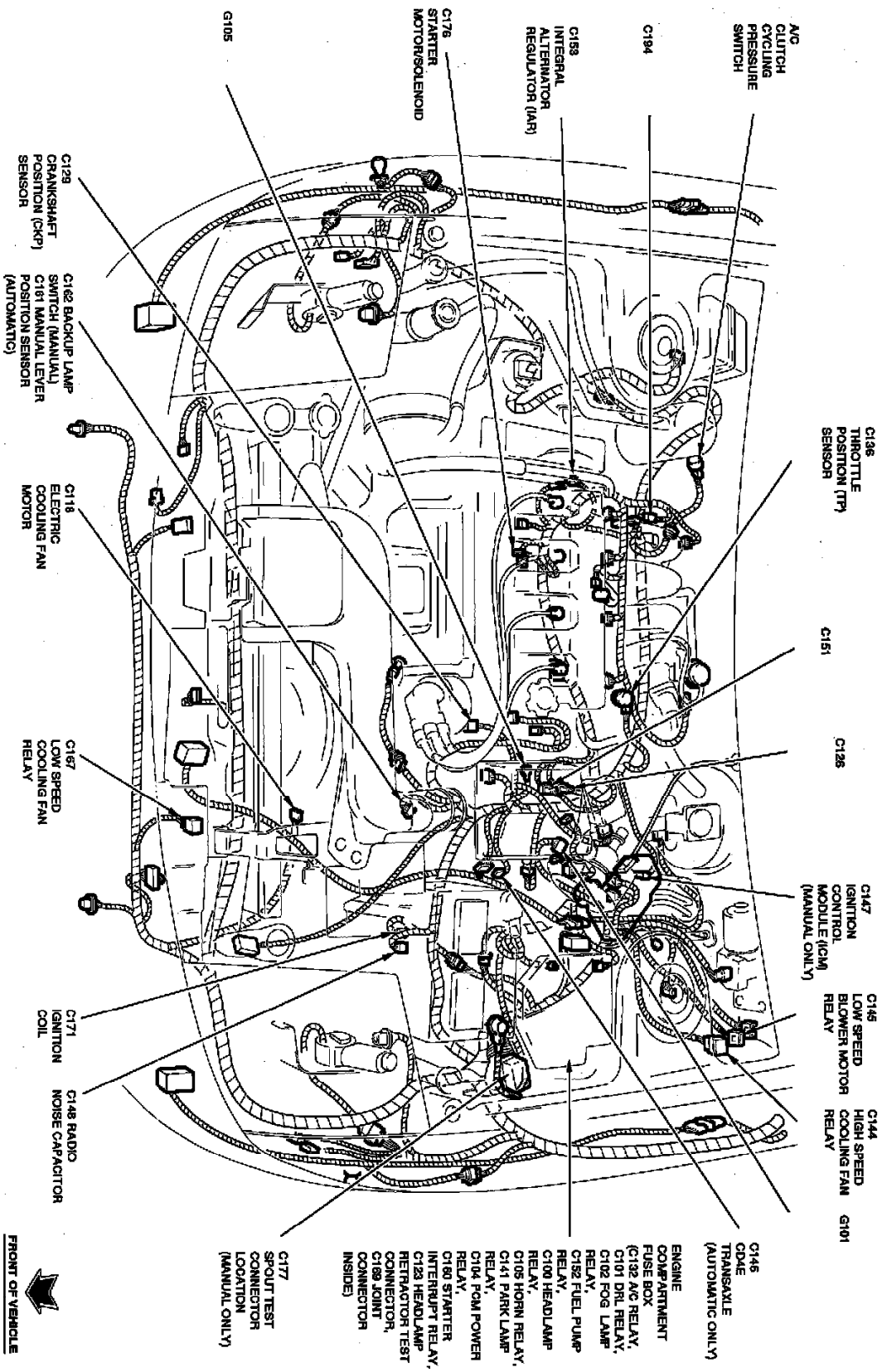

Component Locations

UNDERHOOD VIEW

Left side of engine compartment in fuse box

Intake Air Temperature Sensor: Description and Operation
Manual Transmission

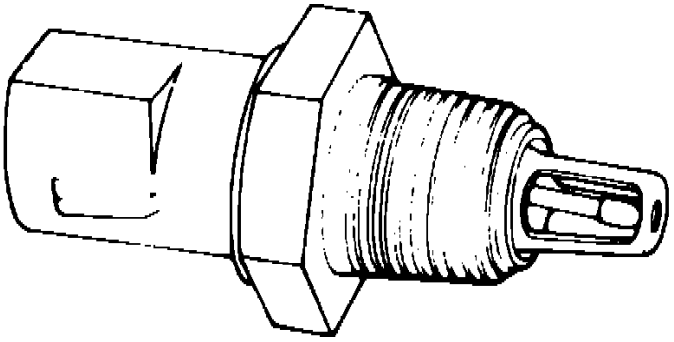

Intake Air Temperature Sensor

PURPOSE

The Intake Air Temperature (**IAT**) sensor measures the temperature of the incoming air flow. The Powertrain Control Module (**PCM**) uses this information to adjust the fuel injection base pulse width, EGR flow, and ignition timing.

CONSTRUCTION

The IAT is a two lead thermistor type sensor with a negative temperature coefficient and is located in the intake air flow path.

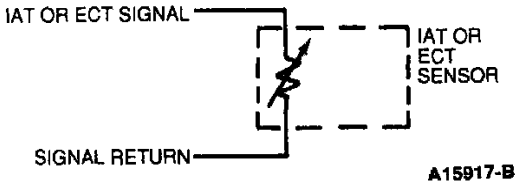

Descriptive Schematic

OPERATION

The PCM applies a 5.0 volt reference voltage to the IAT signal lead while the signal return lead is connected to a common sensor ground. As the temperature of the incoming air increases the resistance of the IAT decreases and the voltage drop across the IAT decreases.

A decrease in air temperature will increase the resistance of the IAT and raise the voltage drop across the sensor.

The normal operating range of the IAT is 3.50 volts (50°F) to 1.02 volts (158°F).

Note: Due to it's negative temperature coefficient minor increases in resistance across the IAT circuit harness and ground connections can result in temperature values that are much lower than actual.

RELATED DIAGNOSTIC TROUBLE CODES

DTC 64/112 - The IAT sensor output is less than the self-test minimum, 0.2 volts.

DTC 54/113 - The IAT sensor output is greater than the self-test maximum, 4.6 volts.

DTC 24/114 - The IAT sensor output is out of self-test range, 0.3-3.7 volts.

Intake Air Temperature Sensor: Description and Operation
Automatic Transmission

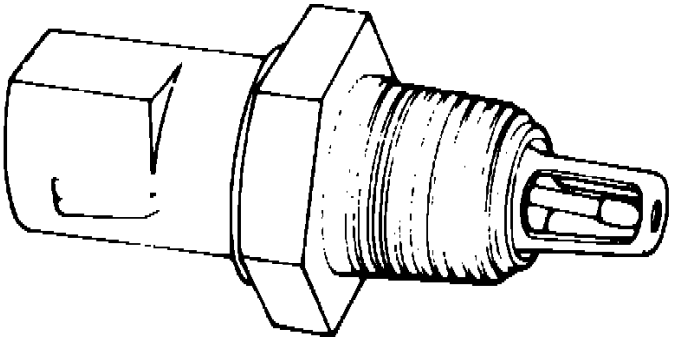

Intake Air Temperature (IAT) Sensor

LOCATION

The Intake Air Temperature (IAT) sensor is threaded into the intake air passage with a sensing element extending into the air chamber.

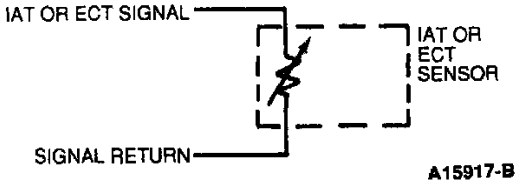

Descriptive Schematic

OPERATION

The IAT sensor is a negative temperature coefficient sensor, meaning that as the temperature of the sensor increases, the resistance will decrease. As the resistance value changes, the signal sensed by the Powertrain Control Module **(PCM)** will also change. The PCM reads the varying sensor resistance and determines the air charge temperature, using this information to optimize the air/fuel mixture.

The IAT sensor will also set a fault code when the PCM determines the output signal to be out of the normal operating range.

Barometric Pressure Sensor: Description and Operation

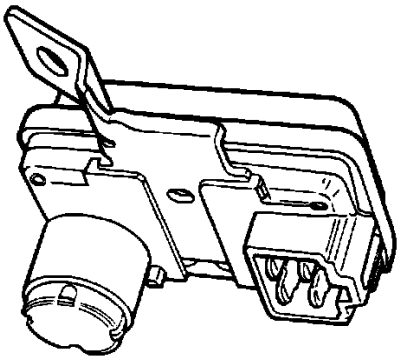

Barometric Pressure (BP) Sensor

The Barometric Pressure (BARO) sensor is a frequency generating device producing varying signals depending on barometric (atmospheric) pressure. The PCM monitors the frequency emitted from the sensor. The PCM calculates sensor input to optimize air/fuel ratio, idle speed, purge flow and A/C cutoff.

Brake Signal: Description and Operation

PURPOSE

The Brake On Off (**BOO**) signal is an input to the Powertrain Control Module (**PCM**), informing it of brake operation. The PCM uses this data to modify the operation of the torque converter clutch (if equipped), A/C compressor (if equipped), and idle speed during periods of deceleration, and idle with the brakes applied.

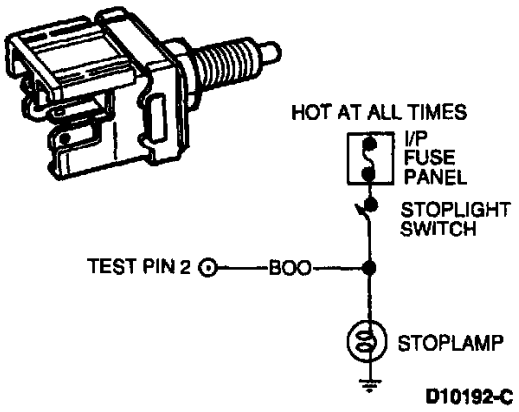

Stoplight Switch

OPERATION

The PCM receives a signal (battery voltage) directly from the stoplamp switch when the the brake pedal is applied.

RELATED TROUBLE CODES

DTC 74/536 - BOO signal did not cycle high and low when the brake pedal was depressed during the Key On Engine Running **(KOER)** self-test.

Clutch Pedal Position Switch: Description and Operation

PURPOSE

The Clutch Pedal Position (**CPP**) switch provides an input to the Powertrain Control Module (**PCM**), allowing it to compensate for changes in engine load resulting from clutch operation. The PCM adjusts the idle speed and air/fuel ratio according to input from the CPP switch.

OPERATION

A 5.0 volt reference signal is applied to the CPP from the PCM. The CPP switch is open with the clutch pedal up and closed when down. When the switch is closed it applies ground, through the signal return circuit, to the CPP circuit, informing the PCM that the clutch pedal is depressed.

RELATED DIAGNOSTIC TROUBLE CODES

DTC 528 - CPP circuit failure, during Key On Engine OFF (**KOEO**) self-test or while cranking the PCM sensed a high voltage (clutch pedal not depressed) on the CPP circuit.

Data Link Connector: Description and Operation
Automatic Transmission

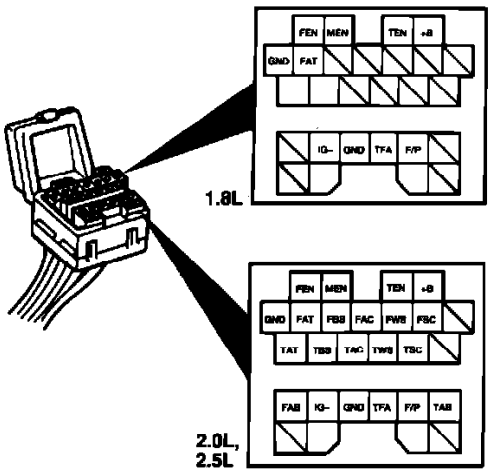

A16786-B

Engine	Location
1.8L	Behind the battery, next to the LH strut tower.
2.0L, 2.5L	Behind the battery, next to the main fuse panel.

Data Link Connector

The Data Link Connector **(DLC)** provides access to several systems for diagnosis and testing procedures. These system tests can be accessed through DLC pins:

^ Electronic engine control diagnosis - TEN and FEN pins
^ Electronic transaxle control diagnosis - TAT and FAT pins
^ Initial set - TEN pin
^ Fuel pump check - F/P pin
^ Engine speed check - IG- pin
^ Anti-lock brake system diagnosis (2.0L and 2.5L) - TBS and FBS pins
^ Horn/Air Bag system check (2.0L and 2.5L) - FAB pin
^ Battery voltage check - +B pin
^ Switch monitor diagnosis - MEN pin

EGR Backpressure Transducer: Description and Operation

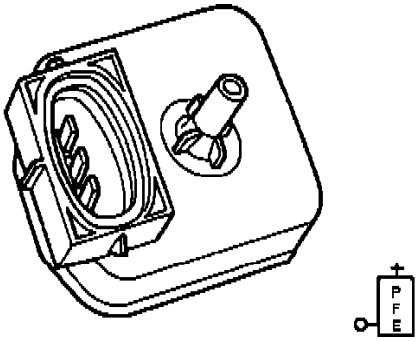

Pressure Feedback Electronic (PFE) EGR Sensor

The Pressure Feedback EGR (PFE) Sensor is a ceramic capacitive-type pressure sensor. Exhaust pressure or vacuum is converted into a proportional analog voltage signal, which is digitized by the Powertrain Control Module (PCM). The PCM uses the signal received from the PFE sensor to compute optimum EGR flow rate, as well as to monitor EGR flow.

EGR Valve Position Sensor: Description and Operation

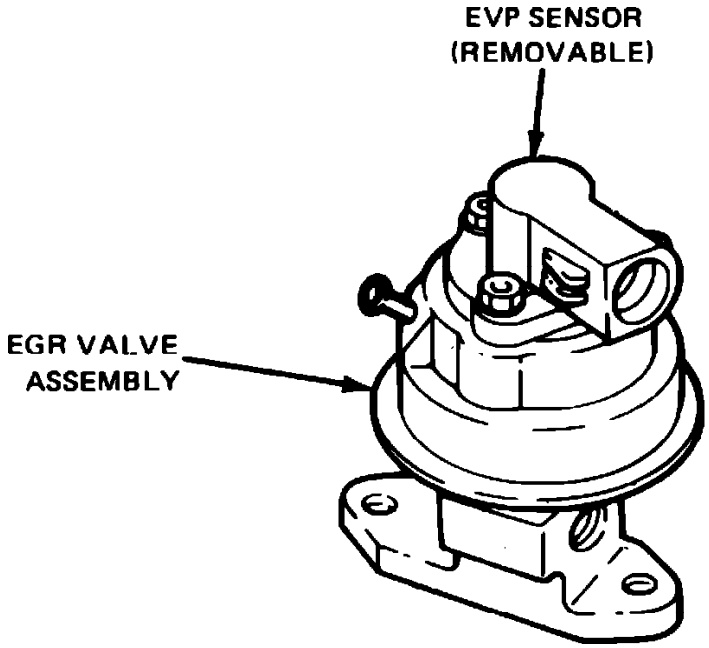

EGR valve position sensor

The EGR Valve Position (EVP) sensor, mounted on top of the EGR valve, is a linear potentiometer that monitors the position of the EGR valve.
The operating output values for the EVP sensor are approximately 0.8 volts (EGR valve closed) to approximately 4.5 volts (EGR valve fully open).
The Powertrain Control Module (PCM) receives the output value from the EVP sensor and converts it into EGR valve position. This information is used to optimize the air/fuel ratio, ignition timing, and EGR flow for the best possible performance under all operating conditions.
The EVP sensor will also set a fault code when it sends a signal to the PCM that is out of the normal operating range.

Heated Oxygen (HO2S) Sensor: Description and Operation
Automatic Transmission

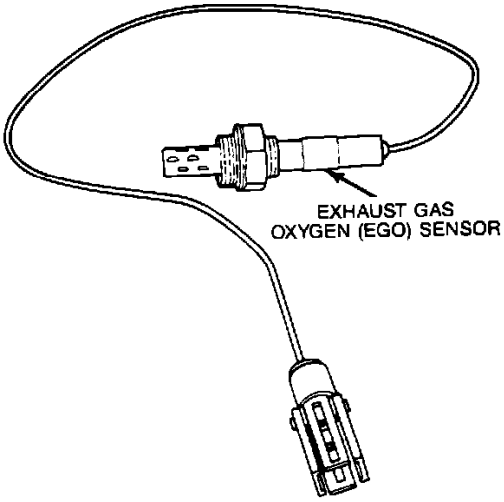

Exhaust Gas Oxygen (EGO) Sensor

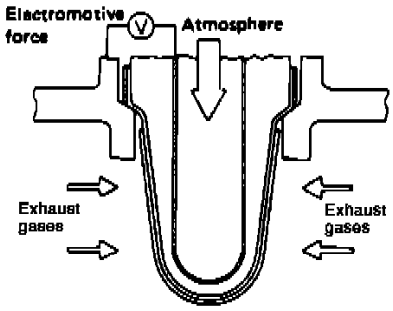

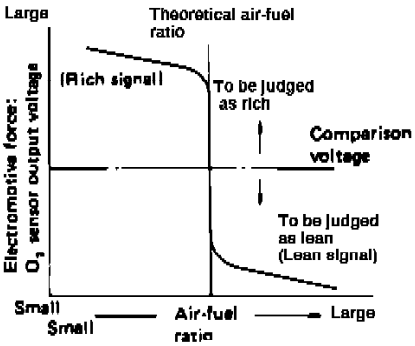

Oxygen Sensor Operation

The Exhaust Gas Oxygen (EGO) sensor generates a voltage between 0 volts (lean condition) and 1.1 volts (rich condition). The Electronic Control Assembly (ECA) reads this signal to achieve an air/fuel ratio of 14.7:1 when operating in CLOSED LOOP. The sensor is located in the exhaust stream ahead of the catalytic converter. The platinum surface electrode sampling tip measures and compares oxygen content difference between the ambient atmosphere and exhaust gas.

Heated Oxygen (HO2S) Sensor: Description and Operation
Manual Transmission

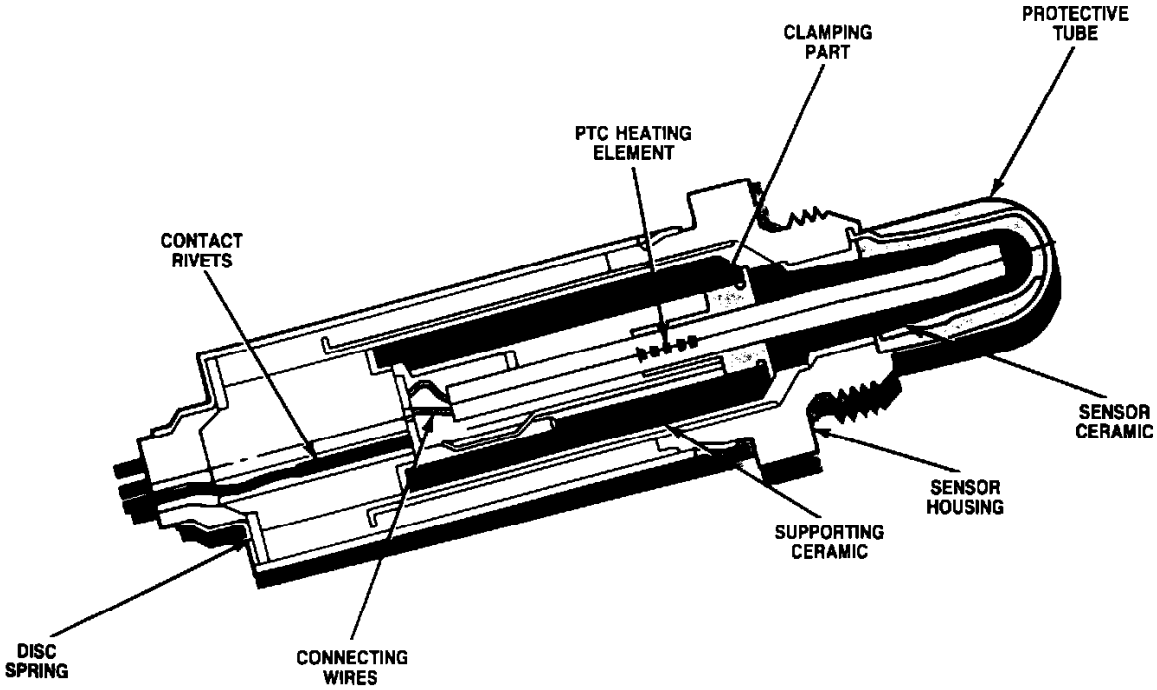

Heated Oxygen Sensor

PURPOSE

The Heated Exhaust Gas Oxygen Sensor**(HO2S)** detects the presence of oxygen in the exhaust system and produces a variable voltage according to the amount of oxygen present.

When operating in closed loop the Powertrain Control Module (**PCM**) monitors this input and correspondingly changes the duration of the fuel injection pulse width to achieve an air/fuel ratio of 14.7:1.

CONSTRUCTION

The sensor is a zirconium dioxide ceramic thimble with a platinum surface electrode. The sensor is threaded into the exhaust manifold with a sampling tip extending into the exhaust stream.

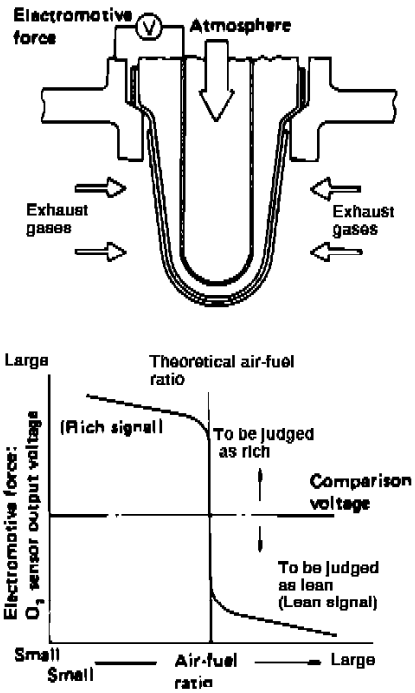

Heated Oxygen Sensor Operation

OPERATION

The zirconium dioxide in the sensor is electrically sensitive to differences in the amount of oxygen present between two sources. The outside of the sensor is vented to the atmosphere while the inside is exposed to the exhaust stream. The differing amounts of oxygen present between

the two sources causes the sensor to generate a voltage.

A rich fuel mixture will result in a low level of oxygen present in the exhaust. This will produce a larger difference in oxygen levels sensed by the HO2S which will result in a higher voltage being produced.

A lean fuel mixture will result in a high level of oxygen present in the exhaust. This will produce a smaller difference in oxygen levels sensed by the HO2S which will result in a lower voltage being produced.

Normal operating range for the HO2S is 0.0 volts (lean condition) to 1.1 volts (rich condition).

The HO2S temperature must be above 600°F to operate properly. To minimize heat up time, a heating element is incorporated into the sensor.

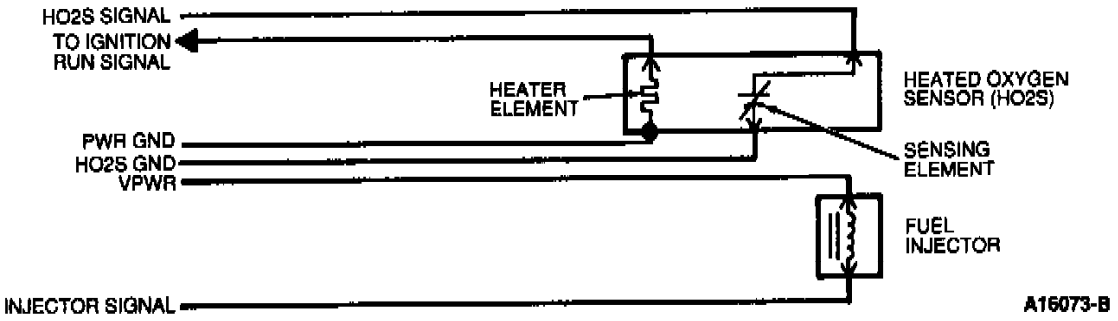

Heated Oxygen Sensor

The HO2S uses a 4 wire connection.

- HO2S wire is the sensor output.
- SIG RTN is the sensor ground.
- 12.0 volt power supply for the sensor heater, from the Ignition Run circuit.
- Ground wire for the sensor heater.

Heated Oxygen (HO2S) Sensor: Service and Repair

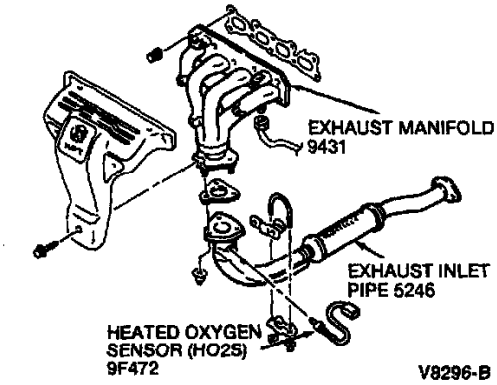

Heated Oxygen Sensor Location

REMOVAL

1. Disconnect the battery ground cable.
2. Raise and support the vehicle.
3. Disconnect the Heated Oxygen Sensor **(HO2S)** electrical connector.
4. Use EGO Sensor Wrench T79P-9472-A to remove the HO2S from the exhaust inlet pipe (5246).

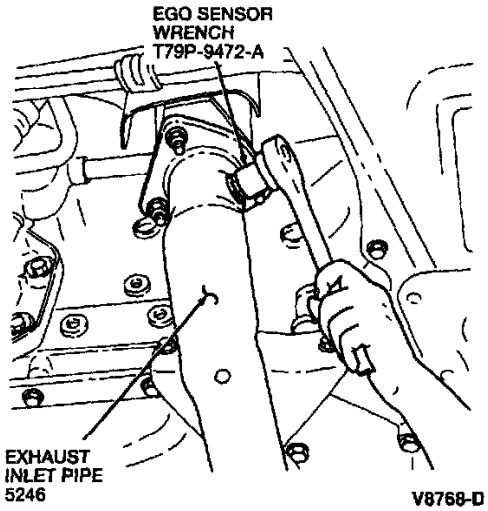

Heated Oxygen Sensor Removal

INSTALLATION

1. To install, reverse the removal procedure.
2. Tighten the HO2S to **30-49 Nm (22-36 ft lb).**

NOTE: When the battery has been disconnected and reconnected, some abnormal drive symptoms may occur while the powertrain control module relearns its adaptive strategy. The vehicle may need to be driven 10 miles or more to relearn the adaptive strategy.

Power Steering Pressure Switch: Description and Operation With Automatic Transmission

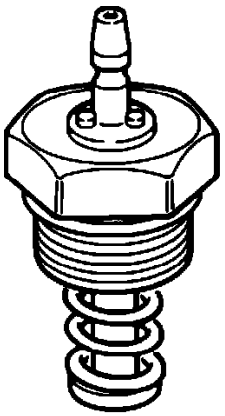

Power Steering Pressure Switch (PSPS)

The Power Steering Pressure Switch (PSPS) is located in the high pressure side of the power steering hydraulic system. This switch CLOSES when the hydraulic pressure reaches approximately 400-600 psi. The idle speed is adjusted to compensate for the additional engine load when the PCM senses this pressure signal.

Power Steering Pressure Switch: Description and Operation With Manual Transmission

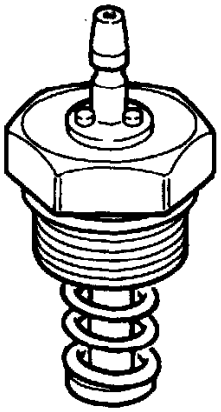

A20546-A

Power Steering Pressure Switch

PURPOSE

The Power Steering Pressure **(PSP)** switch sends an input signal to the Powertrain Control Module **(PCM)** when the power steering pressure rises above 400-600 psi. The PCM uses this signal to adjust idle speed to compensate for additional load on the engine.

OPERATION

The normally open PSP switch receives a 5.0 volt reference signal from the PCM. When the power steering is engaged the switch shuts and the PSP circuit drops to 0.0 volts as the reference signal is shunted to ground along the SIG RTN circuit.

RELATED DIAGNOSTIC TROUBLE CODES

DTC 519 - PSP circuit shut during the Key On Engine Off (KOEO) self-test.

DTC 521 - PSP circuit did not change states during the Key On Engine Running (KOER) self-test.

Pressure Feedback Exhaust Sensor: Description and Operation
Differential Pressure Feedback EGR Sensor

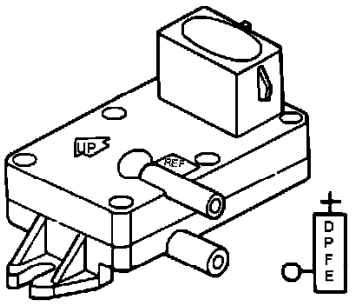

Differential Pressure Feedback Electronic (DPFE) EGR Sensor

The Differential Pressure Feedback EGR **(DPFE)** sensor converts a varying exhaust gas pressure signal into a proportional analog signal which is digitized by the Powertrain Control Module **(PCM)**. The PCM uses the signal receives from the DPFE sensor to optimize the EGR flow.

Pressure Feedback Exhaust Sensor: Description and Operation
Pressure Feedback EGR Sensor

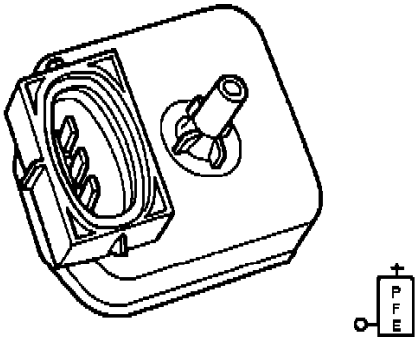

Pressure Feedback Electronic (PFE) EGR Sensor

The Pressure Feedback EGR (PFE) Sensor is a ceramic capacitive-type pressure sensor. Exhaust pressure or vacuum is converted into a proportional analog voltage signal, which is digitized by the Powertrain Control Module (PCM). The PCM uses the signal received from the PFE sensor to compute optimum EGR flow rate, as well as to monitor EGR flow.

Manual Lever Position Switch: Description and Operation

Manual Lever Position (MLP) Sensor

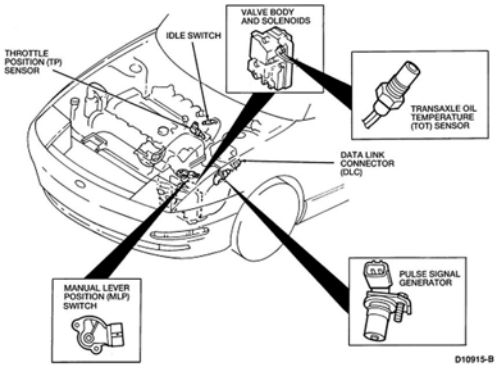

Note: The Park/Neutral Position (PNP) switch is integrated into Manual Lever Position (MLP) switch.

A Manual Lever Position (MLP) switch on 4EAT models prevents accidents and possible injuries due to unintentional vehicle movement caused by engine cranking and starting with the gear selector in a forward or reverse position. Located in series with the starter relay, the switch allows engine cranking only when it is closed manually by controls that simultaneously disengage the engine from the drivetrain.

The Manual Lever Position (MLP) switch mounts on the top of the transaxle. It is manually positioned by the shift cable and selector lever. Positioning the selector lever to either Park or Neutral manually closes the switch and allows engine cranking by turning on the ignition.

Manual Lever Position Switch: Adjustments

1. Disconnect the battery ground cable.

2. Remove the engine air cleaner.

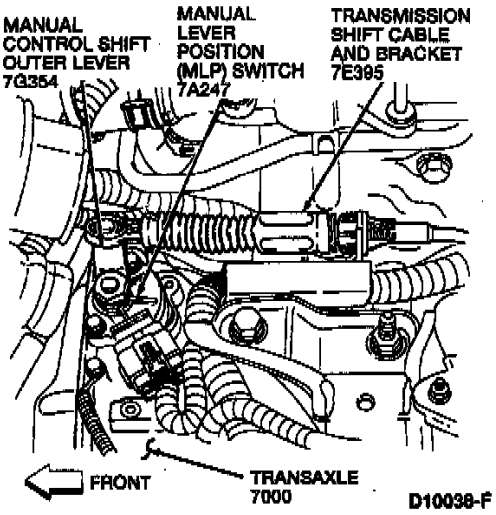

Manual Lever Position Switch

3. Remove the transmission shift cable and bracket from the manual control shift outer lever. Use a screwdriver or suitable tool to pry the transmission shift cable from the manual control shift outer lever.

4. Disconnect the Manual Lever Position **(MLP)** switch electrical connector.

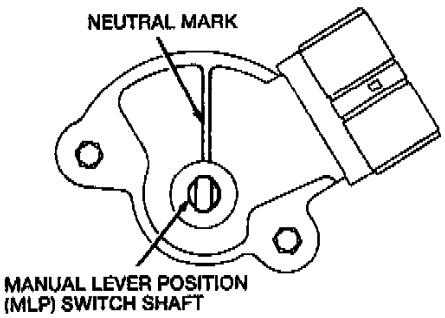

Manual Lever Position Switch

5. Rotate the MLP switch shaft to the neutral mark.

6. Loosen the MLP switch bolts.

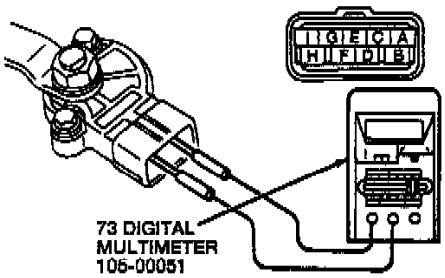

Manual Lever Position Switch

7. Use a Rotunda 73 Digital Multimeter 105-00051 or equivalent and ensure that there is continuity between the terminals.

Position	Connector terminal								
	A	B	C	D	E	F	G	H	I
P	○				○				
						○			○
R	○			○					
N	○							○	
						○			○
D	○	○							
2	○						○		
1	○		○						

○—○ : Continuity

Manual Lever Position Switch

Use the chart to determine which terminals to check between.

8. Tighten the MLP switch bolts to **8-10 Nm (71-88 lb in)**.
9. Connect the MLP switch electrical connector.
10. Ensure that the MLP switch shaft is still aligned with the neutral mark.
11. Install the transmission shift cable on the park actuator support.
12. Install the engine air cleaner.
13. Connect the battery ground cable.

Manual Lever Position Switch: Service and Repair

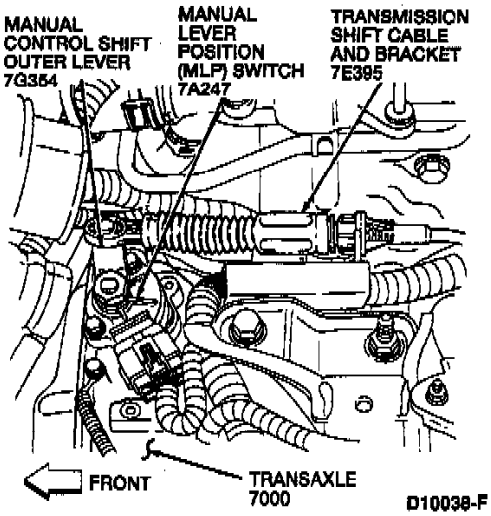

Manual Lever Position Switch

REMOVAL

1. Disconnect the battery ground cable.
2. Remove the engine air cleaner.
3. Remove the transmission shift cable from the manual control shift outer lever. Use a screwdriver or suitable tool to pry the transmission shift cable and bracket from the manual control shift outer lever.
4. Disconnect the Manual Lever Position **(MLP)** switch electrical connector.
5. Remove the MLP switch bolts.
6. Remove the MLP switch.

INSTALLATION

1. Install the MLP switch.
2. Adjust the MLP switch.
3. Tighten the MLP switch bolts to **8-10 Nm (71-88 lb in)**.
4. Connect the MLP switch connector.
5. Install the transmission shift cable and bracket on the manual control shift outer lever.
6. Install the engine air cleaner.
7. Connect the battery ground cable.

Vehicle Speed Sensor: Description and Operation
Automatic Transmission

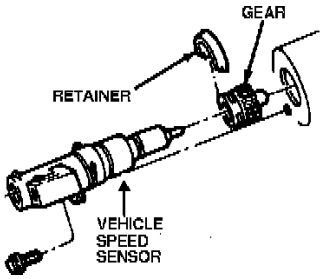

Vehicle Speed Sensor

The Vehicle Speed Sensor (VSS) is a magnetic pulse generator driven by the transmission speedometer gear.
The VSS produces 16 AC signals per revolution and sends this signal to the Powertrain Control Module (PCM). The PCM converts this signal to a vehicle speed value and stores that value in PCM memory.
The PCM uses this value to aid in controlling torque converter lock-up, coolant fan control, vehicle speed control, air/fuel ratio, and igniting timing.

Vehicle Speed Sensor: Description and Operation
Manual Transmission

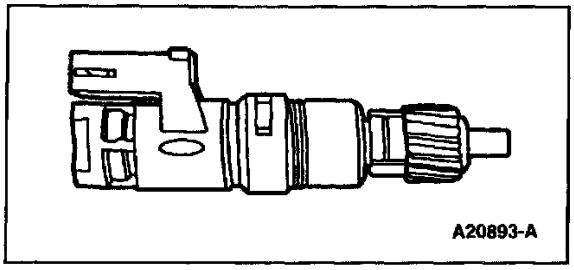

Figure 48: Typical Vehicle Speed Sensor (VSS)

Vehicle Speed Sensor (VSS)

PURPOSE

The Vehicle Speed Sensor **(VSS)** signal is used by the Powertrain Control Module **(PCM)** to determine vehicle speed.

OPERATION

The VSS produces AC signals proportional to vehicle speed. This signal is sent to the PCM and is converted into a vehicle speed value, stored in RAM memory. The PCM utilizes this value to aid in controlling torque converter lock-up, coolant fan control, vehicle speed control, air/fuel ratio and ignition timing.

Vehicle Speed Sensor Schematic

CONSTRUCTION

The VSS is a variable reluctance sensor that generates a sine wave type waveform with a frequency that is proportional to the speed of the vehicle.

RELATED DIAGNOSTIC TROUBLE CODES

DTC 29/452 - PCM detected an error in the VSS output (continuous memory code).

Automatic Transmission/Transaxle: Application and ID

IDENTIFICATION

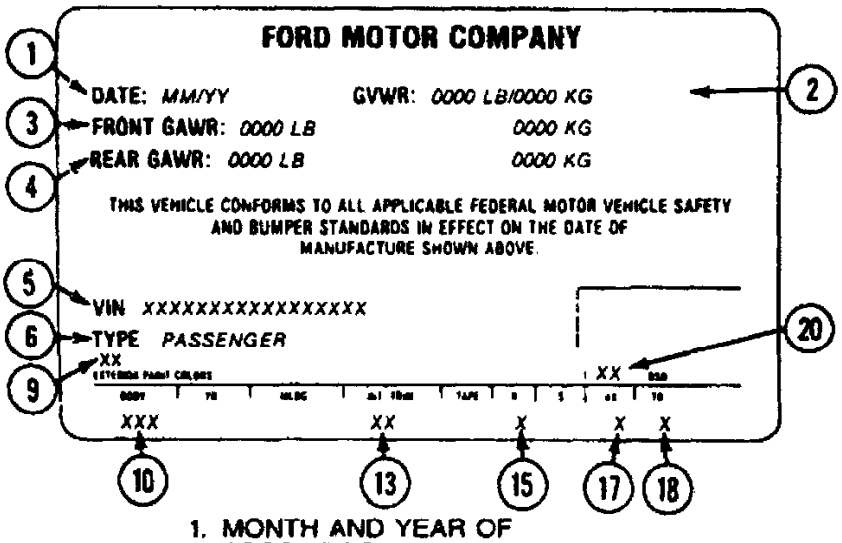

1. MONTH AND YEAR OF PRODUCTION
2. GVWR (GROSS VEHICLE WEIGHT RATING)
3. FROM GAWR (FRONT GROSS AXLE WEIGHT RATING)
4. REAR GAWR (REAR AXLE WEIGHT RATING)
5 VIN (VEHICLE IDENTIFICATION NUMBER)
6. TYPE
9. EXTERIOR PAINT COLORS
10. BODY
13. INTERIOR TRIM
15. RADIO TYPE
17. AXLE RATIO
18. TRANSMISSION
20. DSO (SPECIAL ORDER CODE)

FM5028800297000X

Vehicle Certification Label

All vehicles are equipped with a vehicle certification label affixed to the lefthand door jamb below the latch striker. Refer to the code below the space marked TR.

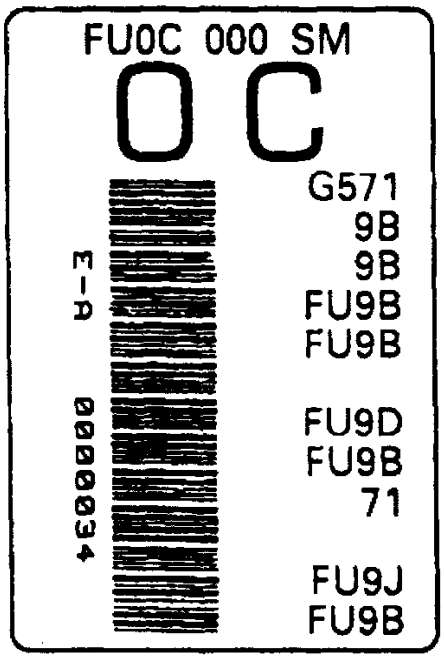

FM5029000591000X

Transaxle Identification Tag

For additional information, such as model, service ID level, or build date, refer to the Transaxle Identification Tag. The transaxle identification tag

is located on the transaxle case.

Automatic Transmission/Transaxle: Description and Operation

DESCRIPTION

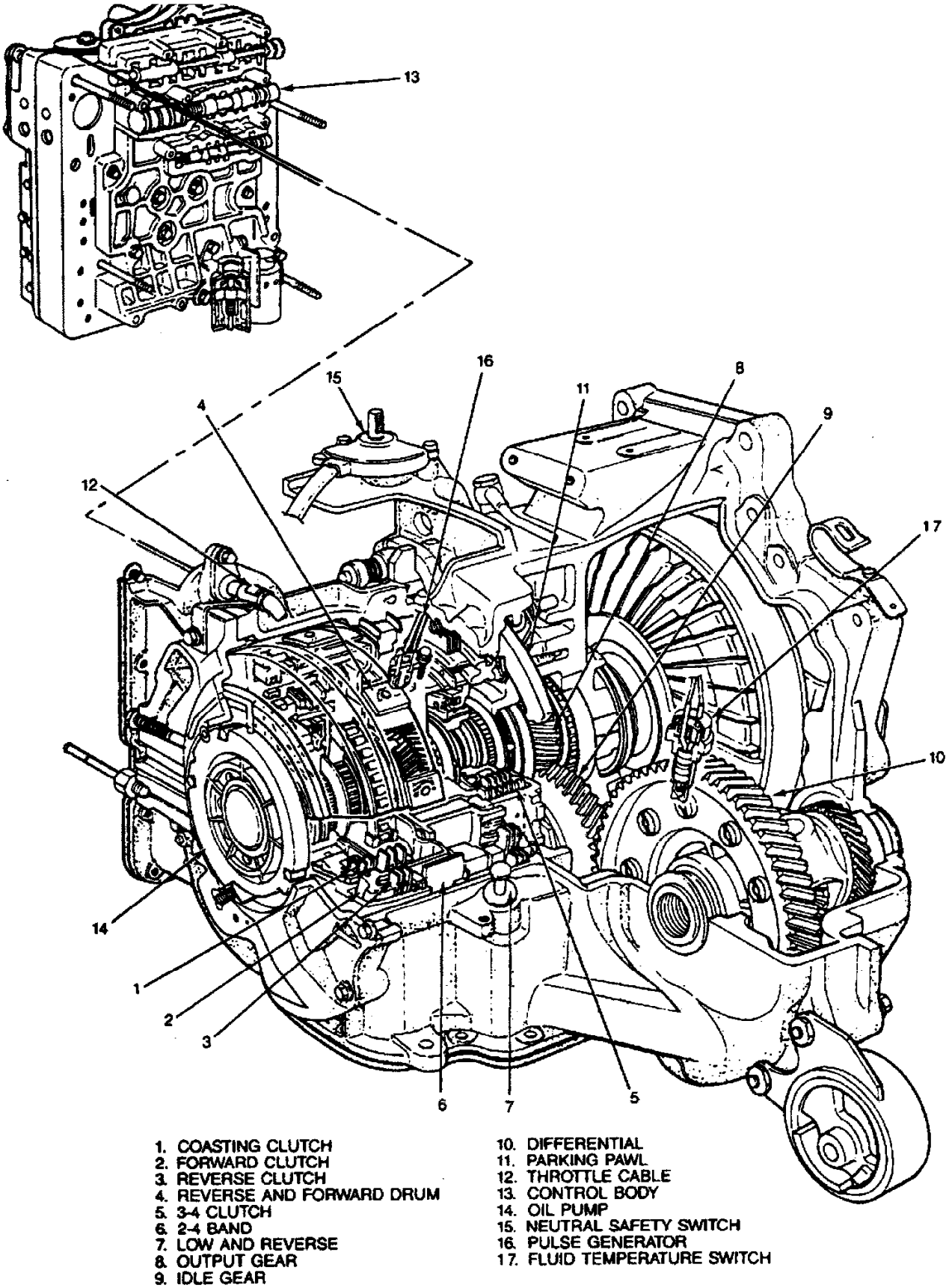

Cross-sectional View Of 4EAT Automatic Transaxle

The electronically controlled automatic transaxle system features a combination of electronic and mechanical systems to control forward gear shifting and torque converter lock-up for quietness and economy, and self-diagnosis capability for simplifying diagnostic procedures. The vehicles are equipped with a manual switch for slow driving on steep or slippery surfaces.

CONSTRUCTION

A unique mechanical feature of the 4EAT automatic transaxle is the single compact combination type 4-speed planetary gear instead of the typical

two planetary gears used in 3-speed transaxles. This allows for an overall size reduction. Another unique feature is the variable capacity oil pump. This pump provides a constant oil quantity at and above medium speed to reduce power losses caused by pumping more oil than necessary at higher speeds.

OPERATION

The electronic system controls transaxle shifting in forward speeds and controls torque converter lock-up through solenoid operated valves. When energized (ON), the solenoid valves actuate clutches and bands to control planetary gear shifting. Shift timing and torque converter lock-up are regulated by the control unit with programmed logic and in response to input sensors and switches to produce optimum driveability.

Automatic Transmission/Transaxle: Initial Inspection and Diagnostic Overview

Testing Sequence

4EAT DIAGNOSTIC SEQUENCE

1. **Perform Inspection and Verification**
   This step will help to find possible problems that are obvious, easy to check, and easy to repair.

2. **Perform Quick Test**
   This test checks the Powertrain Control Module **(PCM)** for diagnostic trouble codes related to electronic failures within the transaxle. Refer to Powertrain/Computer Controls Quick Test Procedures For a summary of the 4EAT Transaxle Repair Process, refer to the Flow of Diagnosis flowchart.

3. **Perform Switch Monitor Test**
   This test checks input signals from the individual input switches to the powertrain control module.

4. **Perform System Inspection**
   This test checks the transaxle for proper mechanical operation.

5. **Review Symptom Charts**
   This step provides basic direction for test procedures. The Symptom Charts only cover problems that are easy to relate to a customer complaint. Follow the directions given in the "Action to Take" column. Directions are given in the recommended order of testing. More detailed symptoms are covered in the operational tests and the road test to isolate problems found while driving or for problems that need specific analysis.

6. **Perform Operational Tests**
   This step determines the causes of most basic problems that may exist. Follow the directions to repair any faults. When directed to perform operational tests and a road test for the same symptom, always perform the operational tests first; this will prevent possible damage to the transaxle during driving.

7. **Perform Road Test**
   This test evaluates the driveability of the 4EAT transaxle. The results of the test may require major disassembly, therefore this test should always be performed last. During the test, the powertrain may also show problems that can cause the transaxle to malfunction, or be confused with transaxle problems. If no problems are found during the test, it is likely that the problem is intermittent. Since the problem may not reoccur, the symptom should be evaluated with the customer present.

   NOTES:

   After any repair is made, test the transaxle again to check if the symptom is still present. If the symptom reoccurs, further testing must be performed to isolate the problem. Whenever fluid is drained from the transaxle, be certain the proper type and amount of fluid is replaced.

   Engine problems or driveline problems can affect transaxle performance; therefore, other systems may have to be serviced before the transaxle, such as the engine or halfshafts.

   The 4EAT diagnostic procedure consists of a preliminary inspection for obvious defects and a Quick Test for diagnostic trouble codes (6 total), Pinpoint Tests or operational tests performed in a logical sequence, and post operational tests it required.

Preliminary/Visual Inspection

1. Visually inspect the 4EAT from above and below the vehicle. Look for:

   MECHANICAL
   - Proper fluid level.
   - Fluid leaks.
   - Loose engine or transmission mounts.
   - CV joints and halfshaft loose, worn or damaged.
   - Shift linkage binding or damaged.
   - Front brakes for excessive wear or damage.
   - Tire pressure.

   ELECTRICAL
   - Blown fuses.
   - Stretched, open or damaged wiring.
   - Corroded or loose connectors.

2. Check accelerator linkage and throttle valve linkage for freedom of travel.

3. Shift the selector lever manually through all ranges to check for ease of movement, obvious binding or bad adjustment.

4. Check the oil cooler (mounted in front of the radiator) for free air flow and fluid leakage.

5. If the "MANUAL" light on the Instrument Panel is on constantly, refer to the 4EAT Quick Test Procedure.
6. Drive the vehicle to verify the customer complaint.

Automatic Transmission/Transaxle: Symptom Related Diagnostic Procedures

Manual Lever Position Range	Mode	Gear		Solenoid Valves			
				1 – 2 Shift	2 – 3 Shift	3 – 4 Shift	Lockup Control
P	—	—		OFF	OFF	ON	OFF
R	—	Reverse	Below approx. 2.5 mph (4 km/h)	OFF	ON	ON	OFF
			Above approx. 2.5 mph (4 km/h)	OFF	OFF	OFF	OFF
N	—	—	Below approx. 2.5 mph (4 km/h)	OFF	OFF	ON	OFF
			Above approx. 3 mph (5 km/h)	ON	OFF	OFF	OFF
D	Power or Normal	1st		OFF	ON	ON	OFF
		2nd		ON	ON	ON	●
		3rd		ON	OFF	OFF	●
		O/D		ON	OFF	ON	●
2	Power[2]	2nd		ON	ON	OFF	OFF
		3rd*		ON	OFF	OFF	●
		O/D*		ON	OFF	ON	OFF
1	Power[2]	1st		OFF	ON	OFF	OFF
		2nd*		ON	ON	OFF	OFF

● Available for lockup but may not necessarily be activated.

[1] The Transaxle Control Module (TCM) automatically switches between POWER and NORMAL depending on the speed of the accelerator pedal depression.

[2] Cannot be selected.

* Overspeed protection only. Transaxle will not upshift into these gears.

CD10894-E

Shift Solenoid Valve Operational Chart

General Condition Chart(s)

CONDITION	POSSIBLE SOURCE	ACTION
• Engine Will Not Crank in Any Selector Lever Position	• Manual lever position switch stuck, inoperative, damaged or disconnected.	• INSPECT/SERVICE the manual lever position switch.
• Engine Does Not Crank in P and/or N	• Selector lever and linkage out of adjustment. • Manual lever position switch not correctly aligned to transaxle.	• CONFIRM selector or linkage adjustment and operation. • ADJUST manual lever position switch.
• Engine Starts in Selector Lever Positions Other Than P or N	• Selector linkage or lever damaged or out of adjustment. • Manual lever position switch.	• CONFIRM selector linkage or lever adjustment and operation. • CONFIRM manual lever position switch adjustment.
• Vehicle Moves in P Range, or Transaxle Stays in Park When Not in P Range	• Selector lever and linkage out of adjustment. • Parking pawl.	• CONFIRM selector or linkage adjustment and operation. • INSPECT parking pawl.
• Vehicle Moves in N	• Selector lever and linkage out of adjustment. • Control valve damaged. • Torque converter damaged. • Forward clutch damaged.	• CONFIRM selector or linkage adjustment and operation. • INSPECT control valve, SERVICE or REPLACE as required. • INSPECT, SERVICE or REPLACE torque converter. • INSPECT, SERVICE or REPLACE forward clutch.
• Vehicle Does Not Move in D, 2, 1, or R	• Control valves. • Gear selector cable damaged. • Improper fluid level. • Oil pump dirty, broken, or bad seals. • Torque converter damaged. • Solenoid valves. • Clutches. • Parking mechanism.	• INSPECT control valves. • INSPECT gear selector cable. • CHECK and FILL ATF. • INSPECT oil pump. • INSPECT torque converter. • INSPECT/REPLACE solenoid valves. • INSPECT clutches. • INSPECT/REPAIR or REPLACE parking mechanism.

4EAT Symptom Chart (Part 1)

CONDITION	POSSIBLE SOURCE	ACTION
• Vehicle Does Not Move in Any Forward Shift Position. Reverse OK	• Control valves. • Forward clutch worn or damaged. • One way sprag clutch worn or damaged. • Oil flow to forward clutch blocked.	• INSPECT control valves. • INSPECT clutch. • INSPECT clutch. • GO to OP 1.
• Vehicle Does Not Move in Reverse. Forward OK	• Reverse clutch worn or damaged. • Low and reverse clutch slipping.	• INSPECT clutch. • INSPECT clutch adjustment. • GO to operational tests.
• Noise Severe Under Acceleration or Deceleration, OK in Park, Neutral or Steady Speed	• Torque converter failure. • Gear or clutch failure. • Selector cable binding or casing is damaged. • Engine mounts grounding out.	• EXAMINE / SERVICE torque converter. • EXAMINE / SERVICE gear and clutch. • INSTALL and ROUTE cable as specified. • REPAIR / REPLACE engine mounts.
• Noise in Park or Neutral - Does Not Stop in Drive	• Loose flywheel-to-converter bolts. • Oil pump worn. • Torque converter failure.	• TORQUE to specification. • EXAMINE / SERVICE oil pump. • EXAMINE / SERVICE torque converter. • GO to OP 1.
• Noise in all Gears - Changes Acceleration to Deceleration	• Final drive gearset worn. • ATF level. • CV joints.	• EXAMINE / SERVICE final drive gearset. • CHECK ATF level. • SERVICE CV joints as required.
• Noise in all Gears - Does Not Change Power to Coast	• Defective speed sensor gear. • Bearings worn or damaged. • Planetary gearset noisy.	• EXAMINE / REPLACE speed drive or driven gear. • EXAMINE / REPLACE bearings. • SERVICE planetary gearset.
• Harsh Shifts (any gears)	• Line pressure incorrect. • Valve body. • Sticking accumulators. • CV joints. • Engine mounts loose. • Pressure regulator valve sticking. • Band adjustment. • Band servo. • Pressure modulator valve sticking. • Torque reduce signals. • Manual lever position switch. • Transaxle oil temperature sensor. • Oil pump. • Clutches. • Torque converter. • Pulse signal generator.	• GO to OP 1. • INSPECT valve body. • INSPECT accumulators. • SERVICE CV joints as required. • SERVICE engine mounts. • INSPECT pressure regulator valve. • CHECK band adjustment. • INSPECT band servo. • INSPECT pressure modulator valve. • CHECK torque reduce signals. • INSPECT / ADJUST manual lever position switch. • CHECK transaxle oil temperature sensor. • INSPECT oil pump. • INSPECT clutches. • INSPECT torque converter. • INSPECT PSG.
• Soft Shifts (any gears)	• Line pressure. • Oil pump worn. • Internal ATF leakage. • Band adjustment. • Band servo. • Pressure regulator damaged. • ATF level. • Valve body. • Sticking accumulators.	• GO to OP 1. • INSPECT oil pump. • INSPECT transaxle. • CHECK band adjustment. • INSPECT band servo. • INSPECT pressure regulator. • CHECK and FILL ATF. • INSPECT valve body. • INSPECT accumulators.

4EAT Symptom Chart (Part 2)

CONDITION	POSSIBLE SOURCE	ACTION
• Erratic Shifting, Incorrect Shift Points, Incorrect Shift Sequence	• Line pressure solenoid sticking. • Control valves. • Band adjustment. • Clutches slipping. • Fluid level and quality. • Pulse signal generator. • Oil pump. • Clutches. • Transaxle oil temperature sensor.	• GO to OP1. • INSPECT control valves. • CHECK band adjustment. • INSPECT clutches. • CHECK and FILL ATF. • INSPECT pulse signal generator. • EXAMINE/SERVICE oil pump. • CHECK clutches. • INSPECT TOT sensor.
• Improper Lockup	• Control valves. • Torque converter.	• INSPECT control valves. • INSPECT torque converter.
• Skipping Gears (shift 1st to 3rd, or 2nd to O/D, for example)	• Control valves. • Transaxle oil temperature sensor. • Valve body. • 2-4 band.	• INSPECT control valves. • INSPECT TOT sensor. • INSPECT valve body. • CHECK 2-4 band adjustment.
• Transaxle Overheating NOTE: Excessive overheating may cause damage to internal components. Always retest 4EAT for other symptoms after overheating problem is resolved, the burned fluid is replaced, and/or the transaxle is repaired.	• Improper fluid level. • Poor engine performance. • Worn clutch, incorrect band application, or poor oil pressure control. • Restriction in cooler lines. • Transaxle oil temperature sensor. • Clogged cooler. • Valve body. • Solenoid valves.	• CHECK fluid level. • ADJUST according to specifications. • GO to OP1. • CHECK cooler lines for kinks and damage. CLEAN, SERVICE or REPLACE cooler lines. • INSPECT TOT sensor. • INSPECT cooler for plugging. SERVICE as required. INSPECT and CLEAN the transaxle internally. • INSPECT valve body. • INSPECT solenoid valves.
• Drags in Reverse like Parking Brake is Applied	• 2-4 band. • Brakes.	• INSPECT 2-4 band adjustment.
• Drags in Forward Gears	• 2-4 band. • Brakes.	• INSPECT 2-4 band adjustment.
• Engine Runaway on Upshift or Accelerating	• ATF level low. • Valve body. • Transaxle oil temperature sensor. • Oil pump. • Damaged bypass valve. • Clutches slipping.	• CHECK fluid level. • INSPECT valve body, solenoid valves. • INSPECT transaxle oil temperature sensor. • INSPECT oil pump. • INSPECT bypass valve. • INSPECT clutches.
• Engine Runaway on Downshift	• Coasting bypass valve sticking. • Clutches slipping. • ATF level. • Oil pump.	• GO to OP1. • INSPECT clutches. • CHECK fluid level. • INSPECT oil pump.
• Excessive Creep	• Torque converter. • Ignition timing and idle speed. • Line pressure solenoid. • Oil pump.	• INSPECT torque converter. • CORRECT or ADJUST ignition timing or idle speed. • GO to OP1. • INSPECT oil pump.
• No Creep	• ATF level and condition. • Selector lever. • Valve body. • Control valves. • Forward clutch. • Reverse clutch. • Oil pump.	• CHECK ATF level and condition. • CONFIRM selector linkage adjustment and operation. • INSPECT valve body. • INSPECT control valves. • INSPECT clutch. • INSPECT clutch. • INSPECT oil pump.

4EAT Symptom Chart (Part 3)

CONDITION	POSSIBLE SOURCE	ACTION
• Engine Stalls When Put Into Gear	• Torque converter. • Valve body. • Control valves. • Oil pump. • Idle Air Control solenoid.	• INSPECT torque converter. • INSPECT valve body. • INSPECT control valves. • INSPECT oil pump. • INSPECT IAC solenoid.
• No Kickdown	• Line pressure solenoid. • Valve body.	• GO to OP1. • INSPECT valve body.
• Poor Fuel Economy	• Torque converter clutch solenoid. • Torque converter clutch control solenoid.	• INSPECT torque converter clutch solenoid. • INSPECT torque converter clutch control solenoid.
• Lack of Power	• Torque converter. • Reverse clutch.	• INSPECT/REPLACE torque converter. • INSPECT reverse clutch.
• Surges While Cruising	• Valve body.	• INSPECT valve body.
• Poor Acceleration	• Torque converter clutch control solenoid. • Valve body.	• INSPECT torque converter clutch control solenoid. • INSPECT valve body.

4EAT Symptom Chart (Part 4)

Shift Feel Concerns

CONDITION	POSSIBLE SOURCE	ACTION
• Shift Shock in all Ranges	• Line pressure solenoid. • Pressure modulator valve sticking or damaged. • Control valves blocked. • Coasting clutch. • Low and reverse clutch. • Oil pump. • Valve body. • Accumulators. • 3-4 clutch. • CV joints or engine mounts. • 2-4 band and servo. • Pressure regulator valve sticking or damaged.	• CLEAN, SERVICE or REPLACE line pressure solenoid. • CLEAN, SERVICE or REPLACE pressure modulator valve. • CHECK for clogging blockage, SERVICE as required. • CHECK for wear, SERVICE or REPLACE coasting clutch. • CHECK for adjustment, wear and damage, SERVICE low and reverse clutch. • INSPECT oil pump. • INSPECT valve body. • CLEAN, SERVICE or REPLACE accumulators. • INSPECT, SERVICE or REPLACE 3-4 clutch. • SERVICE or REPLACE CV joints or engine mounts. • CHECK 2-4 band and servo adjustment. • CLEAN, SERVICE or REPLACE pressure regulator valve.
• Harsh 1-2 Shift	• Line pressure solenoid.	• CLEAN, SERVICE or REPLACE line pressure solenoid.
• N-R Shift Shock	• N-R accumulator sticking or damaged.	• INSPECT and SERVICE or REPLACE N-R accumulator.
• 2-3 Shift Shock	• 2-3 accumulator sticking or damaged. • 1-2 accumulator sticking or damaged.	• INSPECT and SERVICE or REPLACE 2-3 accumulator. • INSPECT and SERVICE or REPLACE 1-2 accumulator.
• Erratic Shifts	• Line pressure solenoid. • Pulse signal generator not functioning.	• CLEAN, SERVICE or REPLACE line pressure solenoid. • INSPECT PSG pickup and torque converter.

Shift Feel Symptom Chart.

CONDITION	POSSIBLE SOURCE	ACTION
• Soft Shift in All Ranges	• Line pressure solenoid. • Pressure modulator valve sticking or damaged. • Pressure regulator valve sticking or damaged.	• CLEAN, SERVICE or REPLACE line pressure solenoid. • CLEAN, SERVICE or REPLACE pressure modulator valve. • CLEAN, SERVICE or REPLACE pressure regulator valve.
• 1-2 Soft Shift	• Valve body. • 2-4 band is too loose.	• INSPECT valve body, solenoid valves. • INSPECT 2-4 band adjustment.
• 2-3 Soft Shift	• 2-3 accumulator sticking or damaged. • Valve body.	• CLEAN, SERVICE or REPLACE 2-3 accumulator. • INSPECT valve body, solenoid valves.
• N-R Soft Shift	• N-R accumulator sticking or damaged.	• CLEAN, SERVICE or REPLACE N-R accumulator.
• No Lockup	• Torque converter clutch valve sticking or damaged. • Torque converter.	• CLEAN, SERVICE or REPLACE TCC valve. • INSPECT/REPLACE torque converter.
• Drags in Reverse, Like Parking Brake is Applied	• 2-4 band is too tight.	• CHECK 2-4 band adjustment.
• Slow to Engage in Reverse	• Reverse clutch. • Line pressure solenoid. • Transaxle oil temperature sensor. • 1-2 accumulator. • Forward clutch.	• INSPECT for damage or wear; SERVICE or REPLACE reverse clutch. • CHECK line pressure solenoid. • INSPECT TOT sensor. • CHECK 1-2 accumulator. • INSPECT forward clutch.

Shift Feel Symptom Chart.

CONDITION	POSSIBLE SOURCE	ACTION
• Engine has Momentary Runaway During 3-2 Downshift	• Coasting bypass valve sticking or damaged. • 2-4 band and servo.	• INSPECT, SERVICE or REPLACE bypass valve. • INSPECT adjustment, SERVICE or REPLACE 2-4 band.
• Hesitation in 3-2 Shift	• Valve body.	• INSPECT valve body, solenoid valves. REPLACE as necessary.
• No Engine Braking D to 2	• Fluid blockage to coasting clutch or failed coasting clutch. • Valve body.	• CHECK for blockage and coasting clutch condition. • INSPECT valve body, solenoid valves. REPLACE as necessary.
• No Engine Braking 2 to 1	• Fluid blockage to coasting clutch or failed coasting clutch. • 2-4 band and servo. • Valve body. • Control valve.	• INSPECT coasting for blockage or damage • CHECK 2-4 band and servo adjustment and INSPECT condition. • INSPECT valve body, solenoid valves. REPLACE as necessary. • INSPECT, CLEAN or SERVICE control valve.

FM5019300318000X

Downshift Diagnosis Chart

CONDITION	POSSIBLE SOURCE	ACTION
• Engine has Momentary Runaway During 3-2 Downshift	• Coasting bypass valve sticking or damaged. • 2-4 band and servo.	• INSPECT, SERVICE or REPLACE bypass valve. • INSPECT adjustment, SERVICE or REPLACE 2-4 band.
• Hesitation in 3-2 Shift	• Valve body.	• INSPECT valve body, solenoid valves. REPLACE as necessary.
• No Engine Braking D to 2	• Fluid blockage to coasting clutch or failed coasting clutch. • Valve body.	• CHECK for blockage and coasting clutch condition. • INSPECT valve body, solenoid valves. REPLACE as necessary.
• No Engine Braking 2 to 1	• Fluid blockage to coasting clutch or failed coasting clutch. • 2-4 band and servo. • Valve body. • Control valve.	• INSPECT coasting for blockage or damage. • CHECK 2-4 band and servo adjustment and INSPECT condition. • INSPECT valve body, solenoid valves. REPLACE as necessary. • INSPECT, CLEAN or SERVICE control valve.
• No 2-3 Upshift	• 3-4 clutch spring. • Valve body.	• CHECK clutch adjustment, REPLACE 3-4 clutch spring as necessary. • INSPECT valve body, solenoid valves. REPLACE as necessary.
• No 2nd Gear (transaxle shifts 1-3)	• Valve body. • Loose 2-4 band.	• INSPECT valve body, solenoid valves. REPLACE as necessary. • ADJUST 2-4 band.

Downshift Symptom Chart.

CONDITION	POSSIBLE SOURCE	ACTION
• No 2-3 Upshift	• 3-4 clutch spring. • Valve body.	• CHECK clutch adjustment, REPLACE 3-4 clutch spring as necessary. • INSPECT valve body, solenoid valves. REPLACE as necessary.
• No 2nd Gear (transaxle shifts 1-3)	• Valve body. • Loose 2-4 band.	• INSPECT valve body, solenoid valves. REPLACE as necessary. • ADJUST 2-4 band.
• No Lockup	• Torque converter clutch solenoid not functioning. • Torque converter.	• INSPECT/REPLACE TCC solenoid and related hydraulic circuit. • INSPECT/REPLACE torque converter.
• Shift Points incorrect	• Valve body. • 2-4 band out of adjustment. • Damaged or worn forward clutch.	• INSPECT valve body, solenoid valves. REPLACE as necessary. • CHECK 2-4 band adjustments. • INSPECT and SERVICE or REPLACE forward clutch
• Engine Run Away when Upshifting	• Manual lever position switch. • Valve body. • One way sprag clutch. • 2-4 band and servo. • 3-4 clutch. • Bypass valve sticking or damaged. • Forward clutch.	• CHECK adjustment and condition of manual lever position switch • CLEAN, SERVICE or REPLACE valve body. • INSPECT, SERVICE or REPLACE sprag clutch. • CHECK 2-4 band and servo adjustment and condition. • CHECK condition, SERVICE 3-4 clutch. • CLEAN, SERVICE or REPLACE bypass valve. • INSPECT, SERVICE or REPLACE forward clutch.
• No Upshift into Overdrive	• One-way sprag clutch stuck. • Valve body. • Linkage.	• CHECK one-way sprag clutch. • CHECK orifices, solenoid valves, valve body. • CHECK linkage.
• Delayed 1-2 Shift	• Valve body.	• INSPECT valve body, solenoid valves. REPLACE as necessary.

FM5019300319000X

Upshift Diagnosis Chart

UPSHIFT SYMPTOM CHART

CONDITION	POSSIBLE SOURCE	ACTION
• No 2-3 Upshift	• 3-4 clutch spring. • Valve body.	• CHECK clutch adjustment, damage. • INSPECT valve body, solenoid valves.
• No 2nd Gear (transmission shifts 1-3)	• Valve body. • Loose 2-4 band.	• INSPECT valve body, solenoid valves. • ADJUST.
• No Lockup	• Lockup solenoid not functioning. • Torque converter.	• INSPECT solenoid and related hydraulic circuit. • INSPECT torque converter.
• Shift Points Incorrect	• Valve body. • 2-4 band out of adjustment. • Damaged or worn forward clutch.	• INSPECT valve body, solenoid valves. • CHECK 2-4 band adjustments. • INSPECT and SERVICE or REPLACE.
• Engine Run Away when Upshifting	• Neutral safety switch. • Valve body. • One way clutch no. 1. • 2-4 band and servo. • 3-4 clutch. • Bypass valve sticking or damaged. • Forward clutch.	• CHECK adjustment and condition. • CLEAN, SERVICE or REPLACE. • INSPECT, SERVICE or REPLACE. • CHECK adjustment and condition. • CHECK condition, SERVICE. • CLEAN, SERVICE or REPLACE. • INSPECT, SERVICE or REPLACE.
• No Upshift into Overdrive	• One way clutch no. 1 stuck. • Valve body. • Linkage.	• CHECK clutch no. 1. • CHECK orifices, solenoid valves, valve body.

Upshift Symptom Chart (Part 1)

CONDITION	POSSIBLE SOURCE	ACTION
• Delayed 1-2 Shift	• Valve body.	• INSPECT valve body, solenoid valves.

Upshift Symptom Chart (Part 2)

Automatic Transmission/Transaxle: Pinpoint Tests

Operational Test Description

DESCRIPTION

Operational test procedures serve as pre-road test checks. Procedures are conducted in the service facility using minimal time and less effort than the road test. These procedures determine causes of (and provide corrective actions for) the most likely transaxle malfunctions. These include torque converter, friction elements (clutches and bands), hydraulic system, and associated regulating valves and controls.

PREPARATION

1. Check these items:
   - Coolant level and condition
   - ATF level and condition
   - Idle speed

2. Prepare the vehicle:
   - Place selector lever in PARK
   - Block wheels
   - Apply parking brake
   - Warm engine to normal operating temperature.
   - Place gear selector firmly in the "P" position.

3. Perform each operational test and use the evaluation chart for direction.

OP 1 - Operational Test

TEST STEP	RESULT ▶	ACTION TO TAKE
OP1 CHECK LINE PRESSURE AND CONTROL • Connect a Rotunda Automatic Transmission Tester 014-00737 or equivalent to the line pressure inspection hole (square head plug L) on the transaxle and to the engine for a tachometer reading. • Key ON, engine running. • Check / adjust the engine to base idle. — 700 ± 50 rpm for the 2.0L engine — 650 ± 50 rpm for the 2.5L engine • Shift the gear selector to the D range. • Read and record the line pressure at idle. • Depress and hold the brake pedal. **CAUTION: The following steps must be completed within 5 seconds, followed by cooling the ATF in the N range while idling for 1 minute.** • Steadily increase the accelerator pedal to its maximum. • Read and record the line pressure when the engine speed is constant. • Release the accelerator pedal. NOTE: If the line pressure solenoid fails the transaxle will operate at full line pressure. • **Repeat this test for the R, 2 and 1 ranges, making certain to cool the ATF in between tests.**		▶ REFER to the Specification and Line Pressure Evaluation Charts.

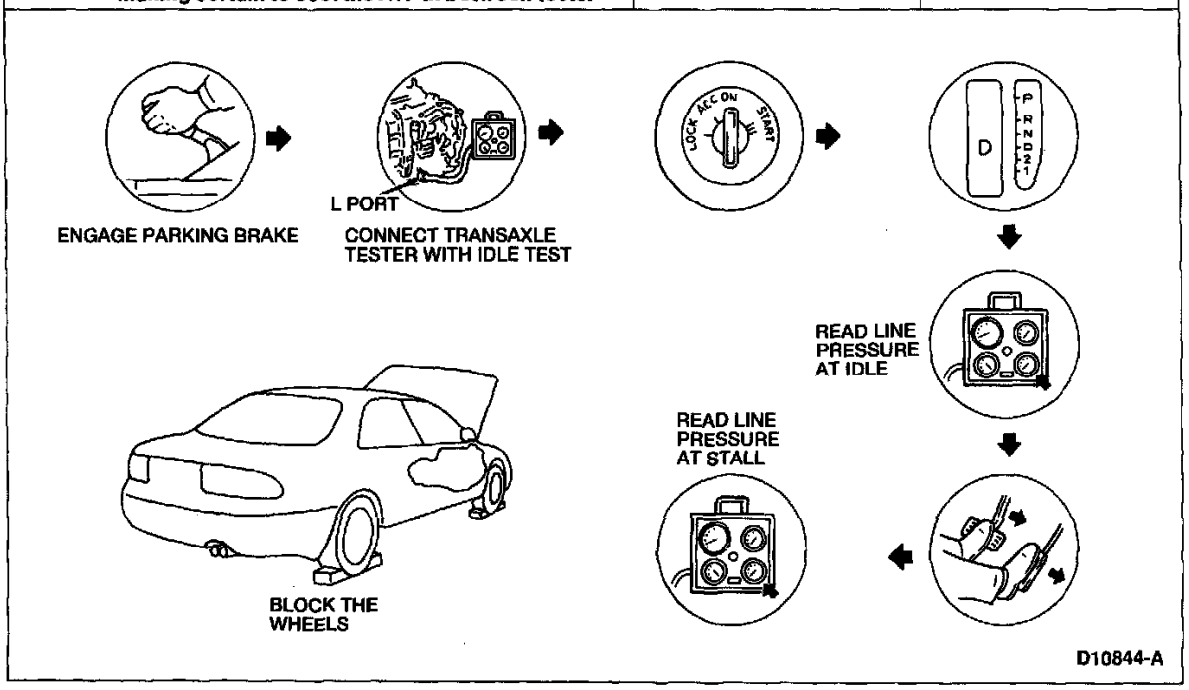

4EAT Pressure Testing Ports

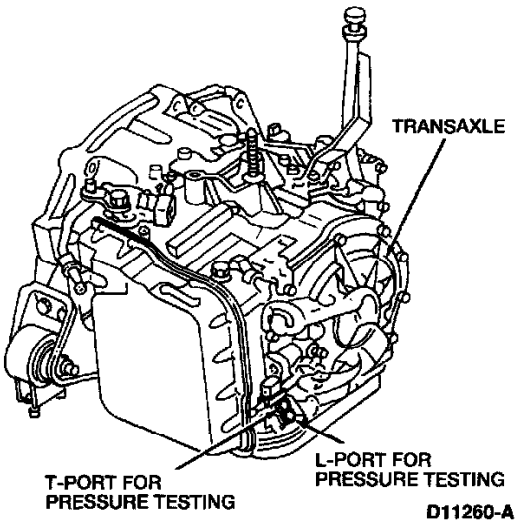

4EAT Pressure Testing Ports.

Line Pressure Specifications

	Line Pressure, kPa (psi)	Line Pressure, kPa (psi)
Range	D, 2, 1	R
Engine	2.0L/2.5L	2.0L/2.5L
Idle	420-530 (60-78)	730-1010 (110-146)
Stall Speed	1100-1170 (160-170)	1910-2020 (276-294)

Specifications.

Line Pressure Evaluation Chart

Pressure Test Result	Range	Possible Source	Action to Take
Low	All	Worn oil pump, fluid leaking from oil pump, control valve body or transaxle case. Pressure regulator valve sticking.	DISASSEMBLE, INSPECT and REPAIR or REPLACE as required the complete pump, valve assembly or components.
Low	D,2	Fluid leaking from hydraulic circuit of forward clutch.	DISASSEMBLE, INSPECT and REPAIR or REPLACE components as required.
Low	1,R	Fluid leaking from hydraulic circuit of low and reverse clutch.	DISASSEMBLE, INSPECT and REPAIR or REPLACE components as required.
Low	R	Fluid leaking from hydraulic circuit of reverse clutch.	DISASSEMBLE, INSPECT and REPAIR or REPLACE components as required.
High	All	Pressure regulator valve sticking. Pressure modulator sticking.	DISASSEMBLE, INSPECT and REPAIR or REPLACE components as required.
Within Specified Limits	All	—	GO to OP2.

Line Pressure Evaluation Chart.

NOTE: Check for a plugged transact filter in all high and low pressure test results.

OP 2 - Operational Test

TEST STEP	RESULT ▶	ACTION TO TAKE
OP2 CHECK POWERTRAIN FUNCTION WITH STALL TEST • Connect a Rotunda Digital Dwell-Tach-Volts Analyzer 059-00007 or equivalent to the vehicle. • Key ON, engine running. • Bring the engine to base idle. • Shift the selector to the R range. • Depress and hold the brake pedal. **CAUTION: The following steps must be completed within five seconds, followed by cooling the ATF in the N range while idling for 1 minute.** • Steadily increase the accelerator pedal to its maximum. • Read and record the engine rpm on the digital tachometer. • Release the accelerator pedal. • **Repeat this test for the D, 2 and 1 ranges, making certain to cool the ATF between tests.**	▶	REFER to the Stall Test Evaluation Chart.

Stall Test Evaluation Chart

Test Result	Range	Possible Source	Action to Take
Above specification	Forward ranges	Forward clutch slipping.	DISASSEMBLE, INSPECT and REPAIR or REPLACE as necessary.
		One-way sprag clutch slipping.	
	D and/or 2 range	One-way roller clutch slipping.	DISASSEMBLE, INSPECT and REPAIR or REPLACE as necessary.
		Forward clutch slipping.	
	1 range	Forward clutch slipping.	DISASSEMBLE, INSPECT and REPAIR or REPLACE as necessary.
		Coasting clutch slipping.	
	R range	Low and reverse clutch slipping.	Perform Road Test to determine clutch. a) Engine braking in 1 range: REPLACE/REPAIR the reverse clutch. b) Engine not braking in 1 range: REPLACE/REPAIR the low and reverse clutch.
		Reverse clutch slipping.	
Within specification		All shift control elements within transaxle are functioning normally.	GO to OP3.
Below specification		Engine out of tune.	Tune engine. REPEAT Stall Test.
		One-way clutch slipping within torque converter.	REPLACE the torque converter.
		Stator	

CD10846-B

Stall Test Evaluation Chart.

OP 3 - Operational Test

TEST STEP		RESULT ▶	ACTION TO TAKE
OP3	CHECK HYDRAULIC CONTROL SYSTEM WITH TIME LAG TEST		
	• Use a stopwatch to measure the time lag between the selector lever positions. • Connect a Rotunda Digital Dwell-Tach-Volts Analyzer 059-00007 or equivalent to the vehicle. • Key ON, engine running. • Bring the engine to base idle • Depress and hold the brake pedal. • Shift the selector lever from the N range to the D range. • Measure and record the elapsed time between the shifting of the selector lever and the feel of shift engagement. • Idle the engine in the N range for 1 minute to allow the ATF to cool. • Shift the selector lever from the N range to the R range. • Measure and record the elapsed time. • **Repeat the time lag testing three times and average the results.**	▶	REFER to the Time Lag Evaluation Chart.

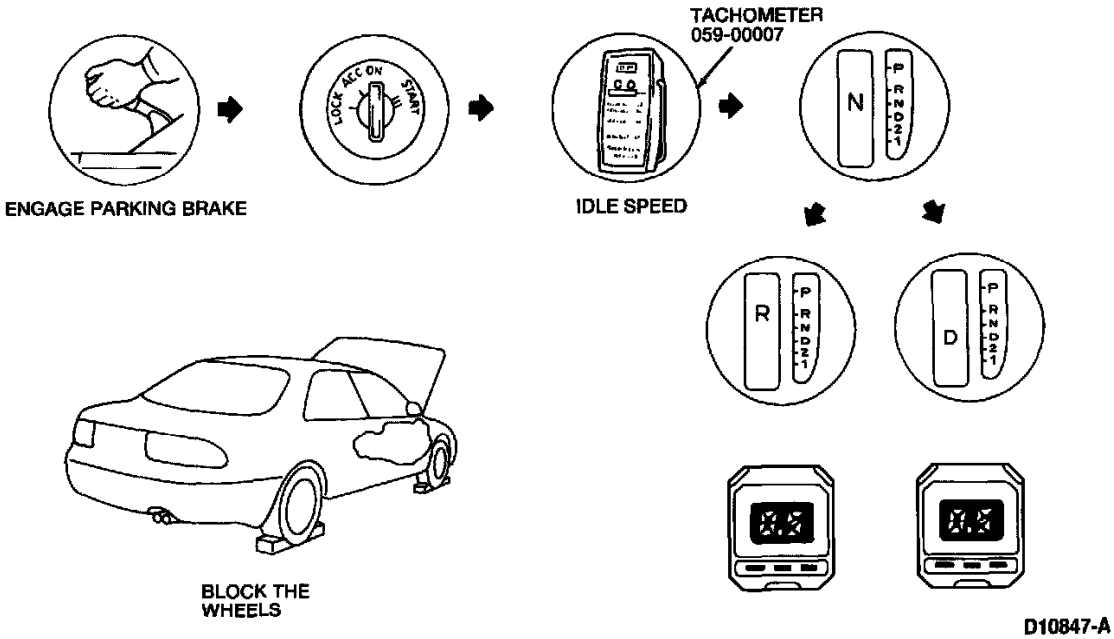

D10847-A

Time Lag Evaluation Chart

Shift	Result	Possible Source	Action
N – D	More than specification[1]	Insufficient line pressure. Forward clutch slipping. One-way sprag clutch slipping. One-way roller clutch slipping.	DISASSEMBLE, INSPECT and REPAIR or REPLACE as required.
	Less than specification[1]	N – D accumulator not operating properly. 1-2 accumulator not operating properly. Excessive line pressure.	
	Within specification[1]	—	GO to OP4.
N – R	More than specification[1]	Insufficient line pressure. Low and reverse clutch slipping. Reverse clutch slipping.	DISASSEMBLE, INSPECT and REPAIR or REPLACE as required.
	Less than specification[1]	N – R accumulator not operating properly. Excessive line pressure.	
	Within specification[1]	—	GO to OP4.

[1] Specified Time Lag: N to D range below approximately 0.9 second
N to R range below approximately 1.1 second

CD10848-B

Time Lag Evaluation.

OP 4 - Operational Test

TEST STEP	RESULT ▶	ACTION TO TAKE
OP4 CHECK SOLENOID REDUCING VALVE PRESSURE ● Connect Rotunda Automatic Transmission Tester 014-00737 or equivalent to the solenoid reducing pressure inspection port (square head plug "T") on the transaxle and to the engine for a tachometer reading. ● Key ON, engine running. ● Bring the engine to base idle. ● **Read and record the solenoid reducing pressure at idle with the vehicle in the P range.**	▶	REFER to the Solenoid Reducing Pressure Evaluation Chart.

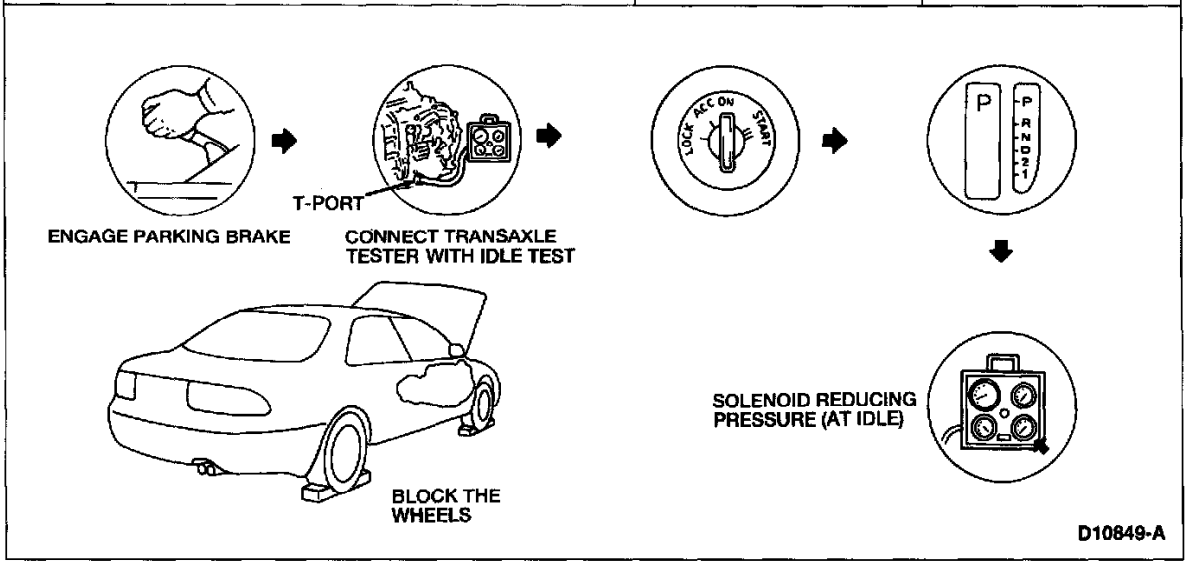

Solenoid Reducing Pressure Test Evaluation Chart

Solenoid Reducing Pressure	Possible Source	Action to Take
Not within specification[1]	Solenoid reducing valve sticking	DISASSEMBLE, INSPECT and REPAIR or REPLACE as necessary.
Within specification[1]	—	GO to Road Test.

1 Specification: 360-400 kPa (52-58 psi)

Solenoid Reducing Pressure Test Evaluation Chart.

TEST STEP	RESULT	▶ ACTION TO TAKE
OP1 CHECK LINE PRESSURE AND CONTROL • Connect a Automatic Transmission Tester D14-00737 or equivalent to the line pressure inspection hole (square head plug L) on the transaxle and to the engine for a tachometer reading. • Key ON, engine running. • Check/adjust the engine to base idle following the procedures outlined — 700 ± 50 rpm for the 2.0L engine — 850 ± 50 rpm for the 2.5L engine • Shift the gear selector to the D range. • Read and record the line pressure at idle. • Depress and hold the brake pedal. **CAUTION: The following steps must be completed within 5 seconds, followed by cooling the ATF in the N range while idling for 1 minute.** • Steadily increase the accelerator pedal to its maximum. • Read and record the line pressure when the engine speed is constant. • Release the accelerator pedal. NOTE: If the line pressure solenoid fails the transaxle will operate at full line pressure. • **Repeat this test for the R, 2 and 1 ranges, *making certain to cool the ATF in between tests.***		▶ REFER to the Specification and Line Pressure Evaluation Charts.

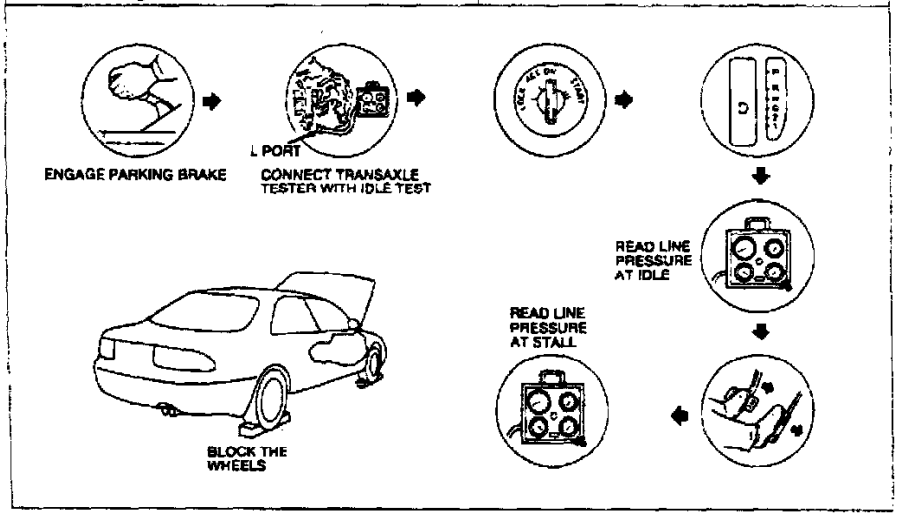

FM5019300315010X

OP1 - Check Line Pressure and Control

SPECIFICATIONS

	Line Pressure, kPa (psi)	Line Pressure, kPa (psi)
Range	D, 2, 1	R
Engine	2.0L 2.5L	2.0L/2.5L
Idle	420-530 (60-76)	730-1010 (110-146)
Stall Speed	1100-1170 (160-170)	1910-2020 (276-294)

LINE PRESSURE TEST EVALUATION

Pressure Test Result	Range	Possible Source	Action to Take
Low	All	Worn oil pump, fluid leaking from oil pump, control valve body or transaxle case. Pressure regulator valve sticking.	DISASSEMBLE, INSPECT and REPAIR or REPLACE as required the complete pump, valve assembly or components.
Low	D,2	Fluid leaking from hydraulic circuit of forward clutch.	DISASSEMBLE, INSPECT and REPAIR or REPLACE components as required.
Low	1,R	Fluid leaking from hydraulic circuit of low and reverse clutch	DISASSEMBLE, INSPECT and REPAIR or REPLACE components as required.
Low	R	Fluid leaking from hydraulic circuit of reverse clutch.	DISASSEMBLE, INSPECT and REPAIR or REPLACE components as required.
High	All	Pressure regulator valve sticking. Pressure modulator sticking.	DISASSEMBLE, INSPECT and REPAIR or REPLACE components as required
Within Specified Limits	All	—	GO to OP2.

Line Pressure Test Evaluation

NOTE: Check for a plugged transaxle filter in all high and low pressure test results.

TEST STEP		RESULT ▶	ACTION TO TAKE
OP2	CHECK POWERTRAIN FUNCTION WITH STALL TEST		
	• Connect a Digital Dwell-Tach-Volts Analyzer 059-00007 or equivalent to the vehicle. • Key ON, engine running. • Bring the engine to base idle • Shift the selector to the R range. • Depress and hold the brake pedal. **CAUTION: The following steps must be completed within five seconds, followed by cooling the ATF in the N range while idling for 1 minute.** • Steadily increase the accelerator pedal to its maximum. • Read and record the engine rpm on the digital tachometer. • Release the accelerator pedal. • **Repeat this test for the D, 2 and 1 ranges, making certain to cool the ATF between tests.**	▶	REFER to the Stall Test Evaluation Chart.

OP2 - Check Powertrain Function With Stall Test

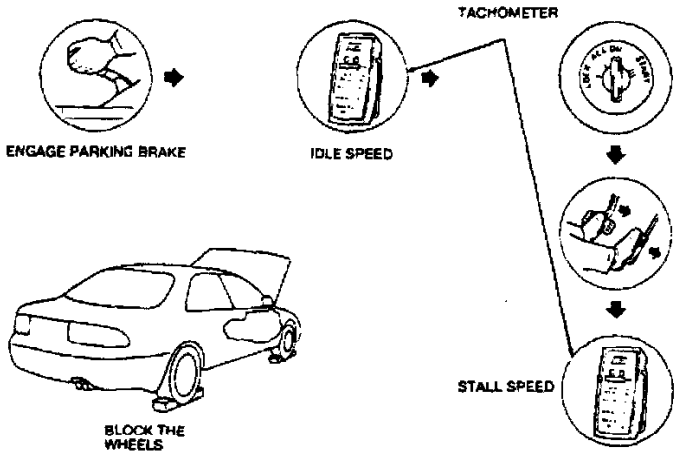

Stall Test Evaluation

Test Result	Range	Possible Source	Action to Take
Above specification[1]	Forward ranges	Forward clutch slipping.	DISASSEMBLE, INSPECT and REPAIR or REPLACE as necessary.
		One-way sprag clutch slipping.	
	D and/or 2 range	One-way roller clutch slipping.	DISASSEMBLE, INSPECT and REPAIR or REPLACE as necessary.
		Forward clutch slipping	
	1 range	Forward clutch slipping.	DISASSEMBLE, INSPECT and REPAIR or REPLACE as necessary.
		Coasting clutch slipping.	
	R range	Low and reverse clutch slipping.	Perform Road Test to determine clutch. a) Engine braking in 1 range: REPLACE/REPAIR the reverse clutch. b) Engine not braking in 1 range: REPLACE/REPAIR the low and reverse clutch.
		Reverse clutch slipping.	
Within specification[1]		All shift control elements within transaxle are functioning normally	GO to OP3.
Below specification[2]		Engine out of tune	Tune engine. REPEAT Stall Test.
		One-way clutch slipping within torque converter	REPLACE the torque converter.
		Stator	

[1] Specification – Stall Speed: 2090-2400 rpm for 2.0L engine
2270-2500 rpm for 2.5L engine
[2] Specification – Stall Speed: 1500 rpm or less

FM5019300315030X

Stall Test Evaluation

TEST STEP		RESULT	ACTION TO TAKE
OP3	CHECK HYDRAULIC CONTROL SYSTEM WITH TIME LAG TEST		
	• Use a stopwatch to measure the time lag between the selector lever positions. • Connect a Digital Dwell-Tach-Volts Analyzer 059-00007 or equivalent to the vehicle. • Key ON, engine running. • Bring the engine to base idle • Depress and hold the brake pedal. • Shift the selector lever from the N range to the D range. • Measure and record the elapsed time between the shifting of the selector lever and the feel of shift engagement. • Idle the engine in the N range for 1 minute to allow the ATF to cool. • Shift the selector lever from the N range to the R range. • Measure and record the elapsed time. • Repeat the time lag testing three times and average the results.		▶ REFER to the Time Lag Evaluation Chart.

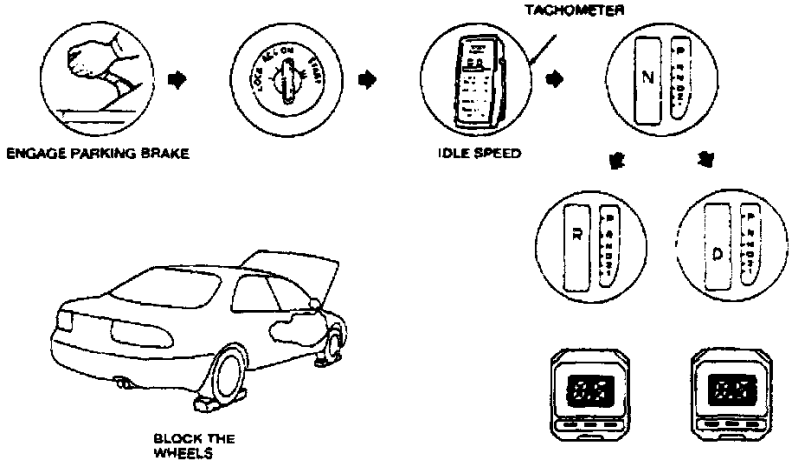

FM5019300315040X

OP3 - Check Hydraulic Control System With Time Lag Test

Shift	Result	Possible Source	Action
N – D	More than specification[1]	Insufficient line pressure. Forward clutch slipping. One-way sprag clutch slipping. One-way roller clutch slipping.	DISASSEMBLE, INSPECT and REPAIR or REPLACE as required.
	Less than specification[1]	N – D accumulator not operating properly. 1-2 accumulator not operating properly. Excessive line pressure.	
	Within specification[1]	—	GO to OP4.
N – R	More than specification[1]	Insufficient line pressure. Low and reverse clutch slipping. Reverse clutch slipping.	DISASSEMBLE, INSPECT and REPAIR or REPLACE as required.
	Less than specification[1]	N – R accumulator not operating properly. Excessive line pressure.	
	Within specification[1]	—	GO to OP4.

[1] Specified Time Lag: N to D range below approximately 0.9 second
N to R range below approximately 1.1 second

FM5019300315050X

Time Lag Evaluation

TEST STEP	RESULT	ACTION TO TAKE
OP4 CHECK SOLENOID REDUCING VALVE PRESSURE • Connect - Automatic Transmission Tester 014-00737 or equivalent to the solenoid reducing pressure inspection port (square head plug "T") on the transaxle and to the engine for a tachometer reading. • Key ON, engine running. • Bring the engine to base idle • **Read and record the solenoid reducing pressure at idle with the vehicle in the P range.**		▶ REFER to the Solenoid Reducing Pressure Evaluation Chart.

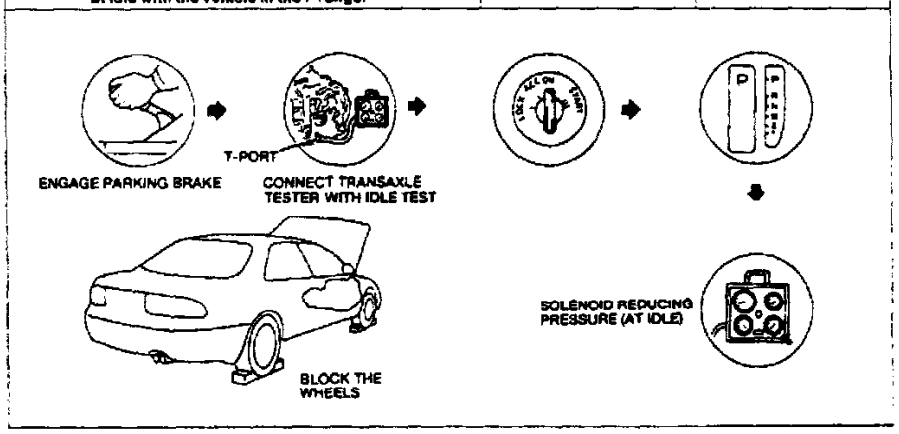

OP4 - Check Solenoid Reducing Valve Pressure

Solenoid Reducing Pressure	Possible Source	Action to Take
Not within specification[1]	Solenoid reducing valve sticking	DISASSEMBLE, INSPECT and REPAIR or REPLACE as necessary
Within specification[1]	—	GO to Road Test

1 Specification: 380-400 kPa (52-58 psi)

FM5019300315060X

Solenoid Reducing Pressure Test Evaluation Chart

TEST STEP	RESULT	ACTION TO TAKE
SI1 CHECK SELECTOR LEVER • Turn the ignition switch ON and apply the brake pedal. • Move the selector lever through each range. — Check that the button must be depressed to select R, 2, 1 and P ranges but not N or D range. — Check that the selector lever position matches the indicator. — Check for smooth operation. — Check that the selector lever clicks in each position. • **Does the selector lever operate properly?**	Yes No	▶ GO to SI2. ▶ ADJUST or SERVICE the selector lever as required.

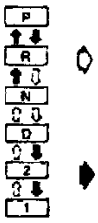

FM5019300313010X

SI1 - Check Selector Lever

TEST STEP		RESULT ▶	ACTION TO TAKE
SI1	CHECK SELECTOR LEVER		
	• Turn the ignition switch ON and apply the brake pedal. • Move the selector lever through each range: — Check that the button must be depressed to select R, 2, 1 and P ranges but not N or D range. — Check that the selector lever position matches the indicator. — Check for smooth operation. — Check that the selector lever clicks in each position. • **Does the selector lever operate properly?**	Yes ▶ No ▶	GO to SI2. ADJUST or SERVICE the selector lever as required.

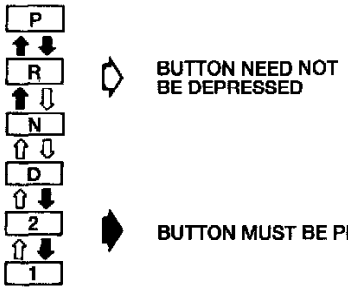

CD8582-D

TEST STEP		RESULT ▶	ACTION TO TAKE
SI2	CHECK AUTOMATIC TRANSAXLE FLUID (ATF) LEVEL		
	• Idle the vehicle. • Depress the brake pedal and shift the selector lever through all ranges until the ATF reaches normal operating temperature 60°-70°C (140°-160°F) • Park the vehicle on a level surface. • Place the selector lever in the P position. • Apply the parking brake and position wheel blocks to prevent the vehicle from moving. • While depressing the brake pedal, shift the selector lever through each range, pausing momentarily in each range. • Place the selector lever back in the P position. • Remove the dipstick, wipe it clean, and replace it (make certain the dipstick is completely seated in the tube). • Remove the dipstick again and inspect the fluid level. NOTE: Use the cool range (20°C, 68°F) marks as a rough fluid level reference only when the transaxle is cool. • **Is the fluid level between the hot range (65°C, 149°F) marks on the dipstick?**	Yes ▶ No ▶	GO to SI3. ADD ATF as required.
SI3	CHECK ATF CONDITION		
	• Remove the dipstick and inspect the fluid condition. • Inspect the ATF for such concerns as: — Burnt ATF — Unusual smell — Discoloration — Contamination NOTE: Contamination conditions include improper fluid type, particles, water, dirt, foam, etc. If contamination is present, the oil pan must be removed for further inspection. If the oil pan reveals contamination, the transaxle must be disassembled, flushed, and cleaned. • **Are any of these concerns evident?**	Yes ▶ Burnt ATF ▶ No ▶	DRAIN and REPLACE ATF. GO to 4EAT Symptom Chart for transaxle overheating symptoms. GO to SI4.

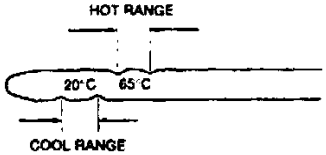

FM5019300313020X

SI2-SI3 - Check ATF Fluid Level and Condition

TEST STEP	RESULT ▶	ACTION TO TAKE
SI2 CHECK AUTOMATIC TRANSAXLE FLUID (ATF) LEVEL		
• Idle the vehicle. • Depress the brake pedal and shift the selector lever through all ranges until the ATF reaches normal operating temperature 60°-70°C (140°-160°F). • Park the vehicle on a level surface. • Place the selector lever in the P position. • Apply the parking brake and position wheel blocks to prevent the vehicle from moving. • While depressing the brake pedal, shift the selector lever through each range, pausing momentarily in each range. • Place the selector lever back in the P position. • Remove the dipstick, wipe it clean, and replace it (make certain the dipstick is completely seated in the tube). • Remove the dipstick again and inspect the fluid level. NOTE: Use the cool range (20°C, 68°F) marks as a rough fluid level reference only when the transaxle is cool. • **Is the fluid level between the hot range (65°C, 149°F) marks on the dipstick?** 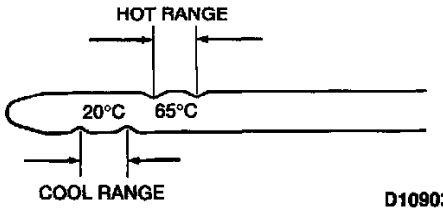 	Yes No	▶ GO to SI3. ▶ ADD ATF as required.
SI3 CHECK ATF CONDITION		
• Remove the dipstick and inspect the fluid condition. • Inspect the ATF for such concerns as: — Burnt ATF — Unusual smell — Discoloration — Contamination NOTE: Contamination conditions include improper fluid type, particles, water, dirt, foam, etc. If contamination is present, the oil pan must be removed for further inspection. If the oil pan reveals contamination, the transaxle must be disassembled, flushed, and cleaned. • **Are any of these concerns evident?**	Yes Burnt ATF No	▶ DRAIN and REPLACE ATF. ▶ GO to 4EAT Symptom Chart for transaxle overheating symptoms. ▶ GO to SI4.

TEST STEP		RESULT	ACTION TO TAKE
SI4	CHECK FOR ATF LEAKS		
	• Park the vehicle on a level surface. • Check the vehicle speed sensor mounting at the transaxle. • Check for leakage at the oil pan gasket and the drainplug. NOTE: Leakage at the oil pan gasket or the drainplug can be stopped by tightening the bolts to specification. • Check the fluid filler tube connection at the transaxle case. • Check the fluid lines and fittings between the radiator and the transaxle for looseness, wear or damage. **CAUTION: Do not try to stop a leak by increasing bolt or fitting torque beyond specification. This may damage the transaxle case threads.** • If necessary, use an oil soluble aniline or fluorescent dye to help determine or locate the source of the fluid leakage. • **Are any concerns evident?**	Yes No	SERVICE the leaking gasket, seal, O-ring, or component. GO to SI5.

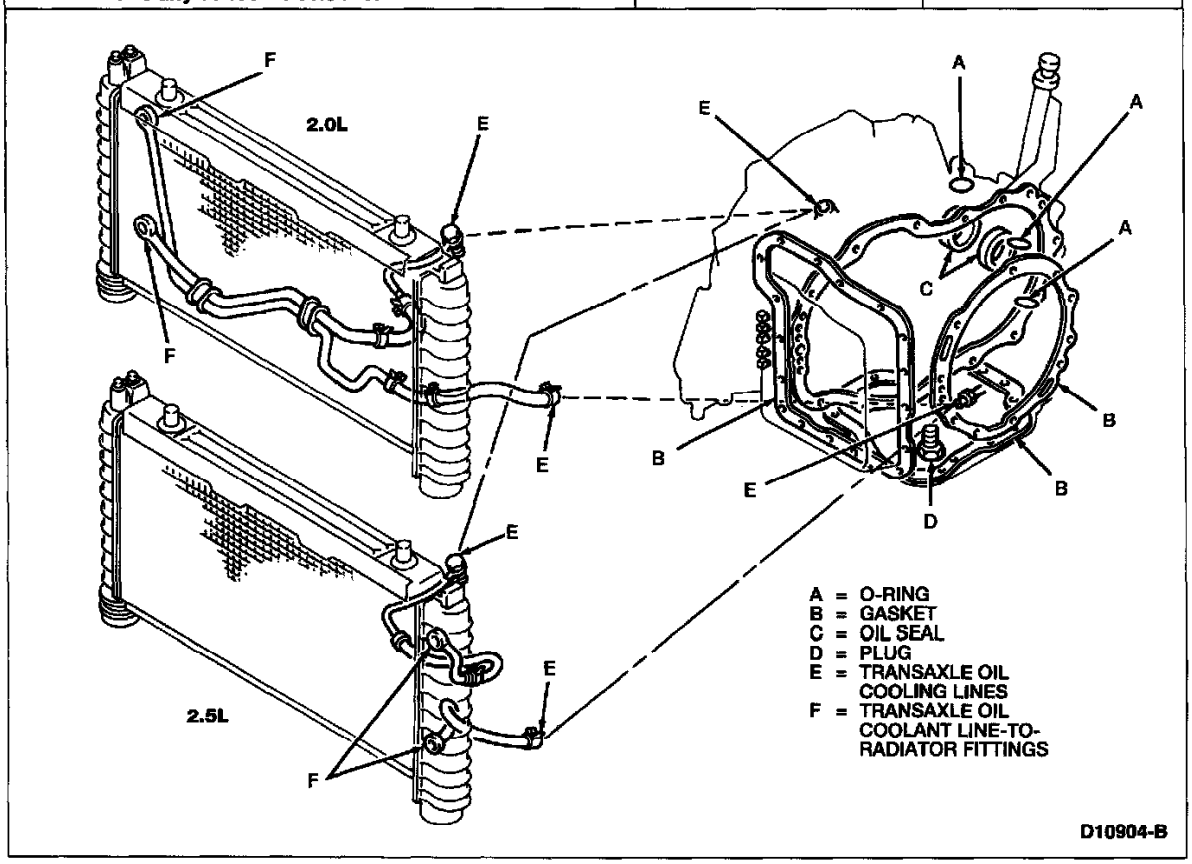

TEST STEP		RESULT ▶	ACTION TO TAKE
SI4	CHECK FOR ATF LEAKS		
	• Park the vehicle on a level surface. • Check the vehicle speed sensor mounting at the transaxle. • Check for leakage at the oil pan gasket and the drainplug. NOTE: Leakage at the oil pan gasket or the drainplug can be stopped by tightening the bolts to specification. • Check the fluid filler tube connection at the transaxle case. • Check the fluid lines and fittings between the radiator and the transaxle for looseness, wear or damage. **CAUTION: Do not try to stop a leak by increasing bolt or fitting torque beyond specification. This may damage the transaxle case threads.** • If necessary, use an oil soluble aniline or fluorescent dye to help determine or locate the source of the fluid leakage. • Are any concerns evident?	Yes No	▶ SERVICE the leaking gasket, seal, O-ring, or component. ▶ GO to SI5.

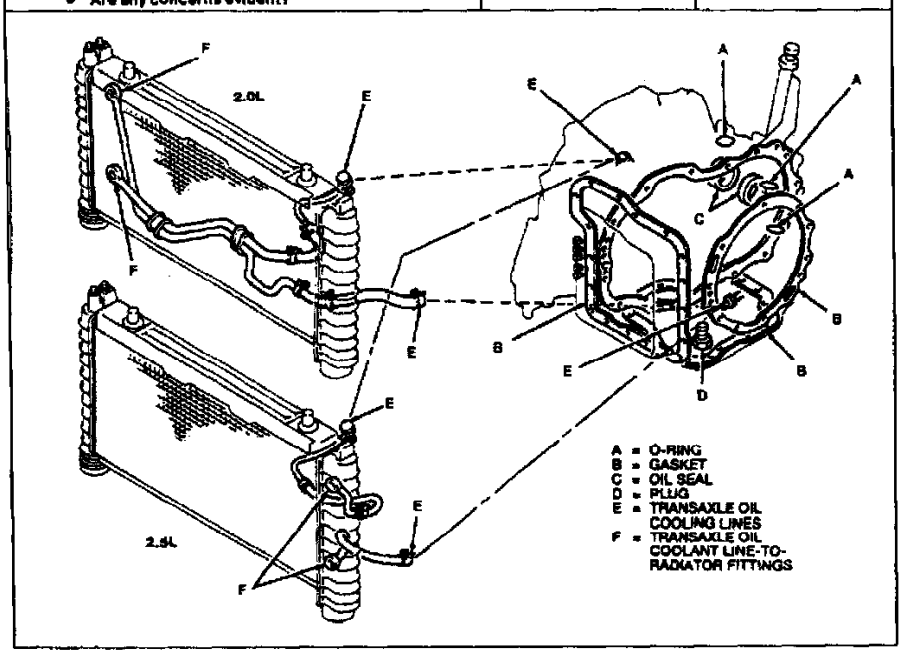

FM5019300313030X

SI4 - Check Fluid Leaks

TEST STEP		RESULT ▶	ACTION TO TAKE
SI5	CHECK IDLE SPEED		
	• Idle the vehicle. • Depress the brake pedal and shift the selector lever through each range until the ATF reaches normal operating temperature 60°-70°C (140°-160°F). • Selector lever in the P range. • Connect a Rotunda Digital Dwell-Tach-Volts Analyzer 059-00007 or equivalent. • With a jumper, ground the PCM STI (TEN) terminal in the data link connector. • Check the base idle speed. — 700 ± 50 rpm for the 2.0L engine. — 650 ± 50 rpm for the 2.5L engine. • **Is the base idle speed correct?**	Yes No	▶ GO to SI5. ▶ ADJUST the idle speed.
SI6	CHECK TIRE PRESSURE		
	• Key OFF. • Check the tire pressure. • **Are the tires inflated to the proper pressure?**	Yes No	▶ GO to the 4EAT Symptom Chart. ▶ INFLATE to the proper level.

TEST STEP	RESULT ▶	ACTION TO TAKE
SI5 CHECK IDLE SPEED • Idle the vehicle. • Depress the brake pedal and shift the selector lever through each range until the ATF reaches normal operating temperature 60°-70°C (140°-160°F). • Selector lever in the P range. • Connect a Rotunda Digital Dwell-Tach-Volts Analyzer 059-00007 or equivalent. • With a jumper, ground the PCM STI (TEN) terminal in the data link connector. • Check the base idle speed. — 700 ± 50 rpm for the 2.0L engine. — 650 ± 50 rpm for the 2.5L engine. • **Is the base idle speed correct?**	Yes ▶ No ▶	GO to SI6. ADJUST the idle speed.
SI6 CHECK TIRE PRESSURE • Key OFF. • Check the tire pressure. • **Are the tires inflated to the proper pressure?**	Yes ▶ No ▶	GO to the 4EAT Symptom Chart INFLATE to the proper level

FMS019300313040X

SI5- SI6 - Check Idle and Tire Pressure

Automatic Transmission/Transaxle: Component Tests and General Diagnostics

Description

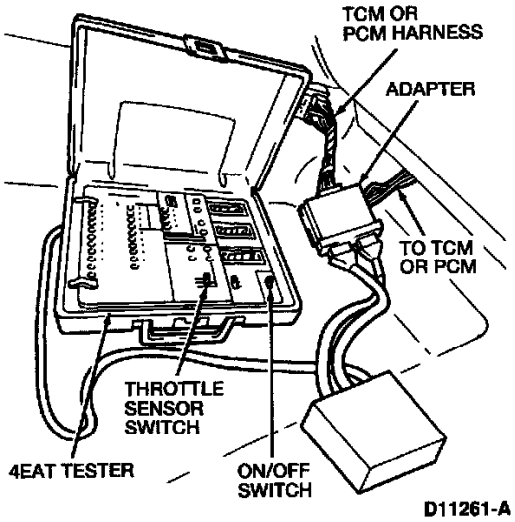

4EAT Tester Hook-up.

This test is an evaluation of the automatic transaxle performance. The test should only be conducted when the 4EAT Symptom Chart directs you here. The Road Test involves a driving evaluation of the transaxle shifting quality, ability, and timing. Shift problems will be directed to a list of symptoms for appropriate actions to take. These symptom charts are given: Upshift, Downshift, and Shift Feel for various symptoms encountered.

1. Perform the Rotunda Road Test using a Rotunda 4EAT Tester O07-OO37B or equivalent.
2. Drive the vehicle and attempt to re-create the symptom.
3. It is important that the road test is performed with safety issues in mind. Use the provided seat belts and operate the vehicle in a safe manner.
4. Two people should participate in this test, one to drive the vehicle, and the other to observe conditions and symptoms.
5. In some cases, it may not be necessary or desirable to perform an actual road test. The symptom may occur at starting, idle or high rpm idle conditions. If this situation applies, proceed with the Road Test procedure by using the operating condition that applies to your situation.
6. If several symptoms are found, service them in the order that they occur.
7. Begin the testing with Step RT 1.

Range	Shifting Gears	2.0L Engine		2.5L Engine	
		Drum Speed rpm	Vehicle Speed mph (km/h)	Drum Speed rpm	Vehicle Speed mph (km/h)
1	2 → 1	2300–2650	26–30 (43–49)	2300–2650	26–30 (43–49)

1 Range Shift Point Chart

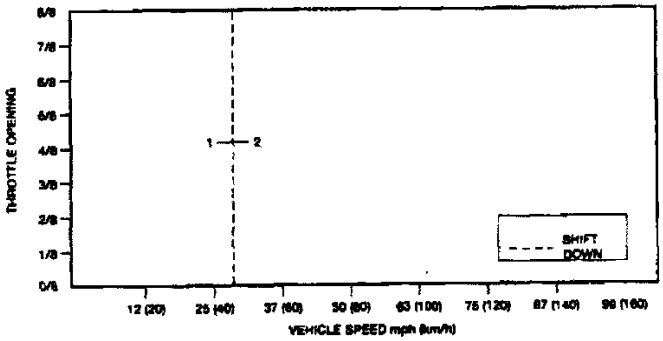

1 Range Shift Point Diagram

Range	Shifting Gears	2.0L Engine		2.5L Engine	
		Drum Speed rpm	Vehicle Speed mph (km/h)	Drum Speed rpm	Vehicle Speed mph (km/h)
2	Lockup ON (3rd)	3650–4000	65–71 (105–115)	3650–4000	65–71 (105–115)
	O/D → 3	4000–4100	101–105 (162–168)	4300–4450	105–109 (169–175)
	3 → 2	3400–3600	60–64 (97–103)	3350–3550	57–61 (92–98)

FM5019300316060X

2 Range Shift Point Chart

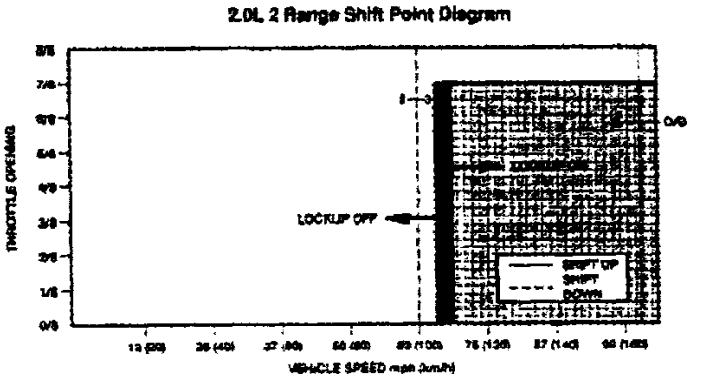

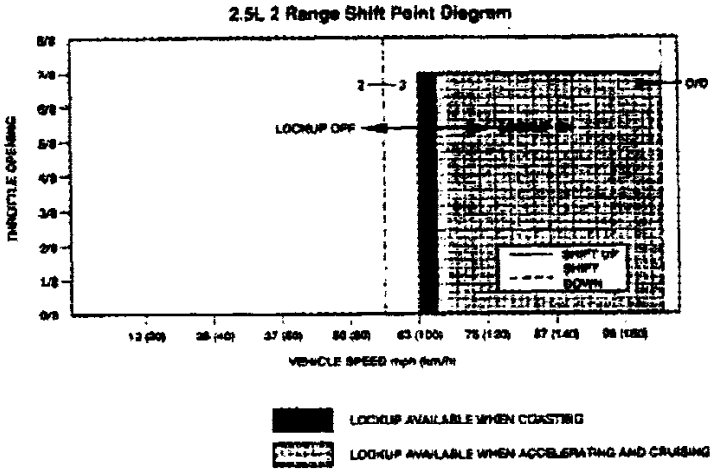

FM5019300316070X

2 Range Shift Point Diagrams

Range	Mode	Throttle Condition (Throttle Sensor Voltage)	Shifting Gears	2.0L Engine Drum Speed rpm	2.0L Engine Vehicle Speed mph (km/h)	2.5L Engine Drum Speed rpm	2.5L Engine Vehicle Speed mph (km/h)
D	Power[1]	Fully open (3.0–4.4 volts)	1 → 2	5650–6250	36–40 (58–64)	6100–6700	37–41 (60–66)
			2 → 3	5650–6050	65–70 (105–113)	5850–6300	65–70 (105–113)
			3 → O/D	5650–6000	100–107 (162–172)	6150–6550	105–111 (169–179)
		Half throttle (1.6–2.2 volts)	1 → 2	3500–4500	22–29 (36–46)	4250–5200	25–30 (40–49)
			2 → 3	4000–4950	46–57 (74–92)	4050–5100	43–54 (69–87)
			3 → O/D	4350–5200	77–92 (124–149)	4300–5300	71–86 (114–139)
		Fully closed (0.1–1.1 volts)	O/D → 3	400–550	10–14 (17–23)	450–600	10–14 (17–23)
			3 → 1	300–500	5–9 (8–14)	400–650	7–11 (11–17)
		Kickdown	O/D → 3	3800–4050	96–102 (155–165)	3600–3850	84–90 (135–145)
			3 → 2	3350–3650	60–64 (96–104)	3250–3550	53–58 (86–94)
			2 → 1	2300–2650	27–30 (44–49)	2600–2950	27–31 (44–50)
	Normal[1]	Fully open (3.0–4.4 volts)	1 → 2	5650–6250	36–40 (58–64)	6100–6700	37–41 (60–66)
			2 → 3	5650–6050	65–70 (105–113)	5850–6300	65–70 (105–113)
			3 → O/D	5650–6000	100–107 (162–172)	6150–6500	105–111 (169–179)
			Lockup ON	3950–4200	100–107 (162–172)	4300–4550	105–111 (169–179)
		Half throttle (1.6–2.2 volts)	1 → 2	2750–3500	17–22 (28–36)	3500–4350	20–25 (33–41)
			2 → 3	2950–3800	34–44 (55–71)	3150–4050	33–43 (54–69)
			3 → O/D	3850–4700	68–84 (110–135)	3500–4550	57–74 (92–120)
			Lockup ON	2700–2900	68–74 (110–119)	3300–4000	77–92 (124–149)
		Fully closed (0.1–1.1 volts)	O/D → 3	400–550	10–14 (17–23)	450–600	10–14 (17–23)
			3 → 1	300–500	5–9 (8–14)	400–650	7–11 (11–17)
		Kickdown	O/D → 3	3800–4050	96–102 (155–165)	3600–3850	84–90 (135–145)
			3 → 2	3350–3650	60–64 (96–104)	3250–3550	53–58 (86–94)
			2 → 1	2300–2650	27–30 (43–49)	2600–2950	27–31 (44–50)

[1] The Transaxle Control Module (TCM) determines the mode of operation according to the speed that the accelerator pedal is depressed.

FM5019300316030X

D Range Shift Point Chart

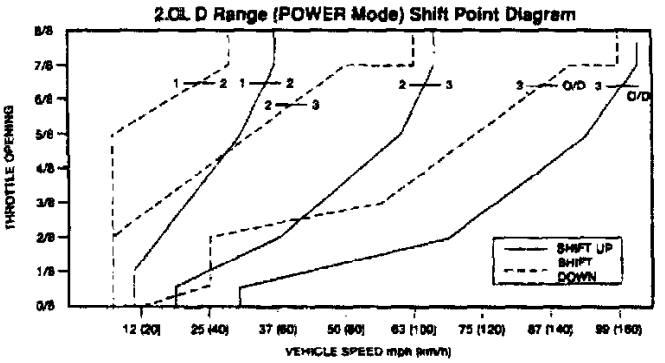

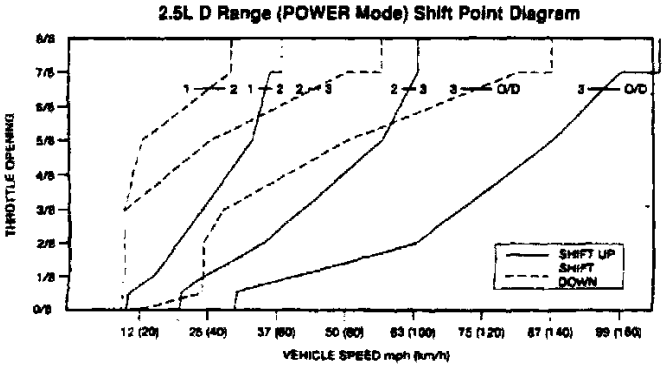

FM5019300316040X

D Range Shift Point Diagram (POWER Mode)

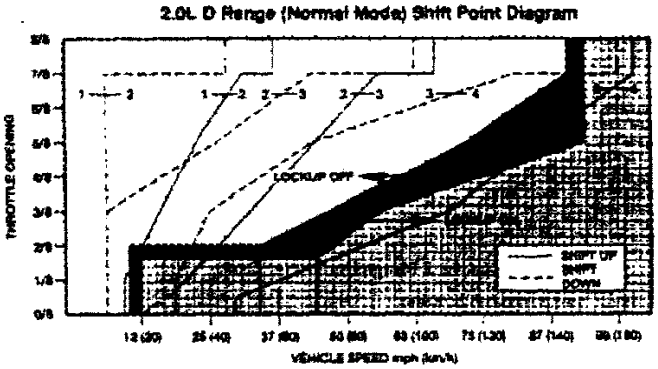

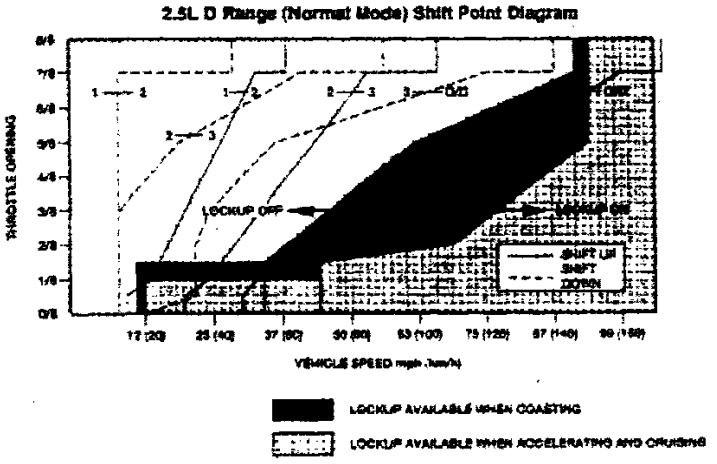

FM5019300316050X

D Range Shift Point Diagram (NORMAL Mode)

RT1

TEST STEP		RESULT ▶	ACTION TO TAKE
RT1	CHECK SHIFT SOLENOID VALVE OPERATION		
	• Connect a Rotunda 4EAT Tester 007-0037B or equivalent to the Powertrain Control Module for the 2.0L engine, or to the Transaxle Control Module for the 2.5L engine. • Key ON, engine running. • Idle the vehicle. • Depress the brake pedal and shift the selector lever through all of the ranges until the ATF reaches normal operating temperature 60°-70°C (140°-160°F). • Turn the 4EAT tester ON. • Drive the vehicle through all of the ranges on the selector lever. NOTE: If all of the shift solenoids fail, the transaxle will operate as follows: NOTE: If one or two shift solenoids fail, the remaining good solenoids will assure minimum driveability. • **Using the Shift Solenoid Valve Chart below, do the 4EAT Tester shift lights (LED's) illuminate with their corresponding transaxle shift?**	Yes No	▶ GO to RT2. ▶ REFER to the Quick Test.

Selector Range	Gear
R	R
D	3rd
2	3rd
1	1st

Shift Solenoid Valve Chart

Range	Mode	Gear		Solenoid Valves: 1 – 2 Shift	2 – 3 Shift	3 – 4 Shift	Lockup Control
P	—	—		OFF	OFF	ON	OFF
R	—	Reverse	Below approx. 2.5 mph (4 km/h)	OFF	ON	ON	OFF
			Above approx. 19 mph (30 km/h)	ON	OFF	OFF	OFF
N	—	—	Below approx. 2.5 mph (4 km/h)	OFF	OFF	ON	OFF
			Above approx. 3 mph (5 km/h)	ON	OFF	OFF	OFF
D	Power or Normal	1st		OFF	ON	ON	OFF
		2nd		ON	ON	ON	●
		3rd		ON	OFF	OFF	●
		O/D		ON	OFF	ON	●
2	Power[2]	2nd		ON	ON	ON	OFF
		3rd		ON	OFF	OFF	●
		O/D		ON	OFF	ON	OFF
1	Power[2]	1st		OFF	ON	OFF	OFF
		2nd		ON	ON	OFF	OFF

● Available for lockup but may not necessarily be activated.

[1] The Transaxle Control Module (TCM) 2.5L/Powertrain Control Module (PCM) 2.0L automatically switches between POWER and NORMAL depending on the speed of the accelerator pedal depression.

[2] Cannot be selected.

CD10894-C

Shift Solenoid Valve Chart.

RT2

TEST STEP		RESULT	ACTION TO TAKE
RT2	CHECK D RANGE SHIFT POINTS		
	• Connect Rotunda 4EAT Tester 007-0037B or equivalent to the Powertrain Control Module (PCM) for the 2.0L engine, or the Transaxle Control Module (TCM) for the 2.5L engine. • Key ON, engine running. • Drive the vehicle until the ATF reaches normal operating temperature 60°-70°C (140°-160°F). • Switch the 4EAT tester to the THROTTLE SENSOR VOLTS position. • Turn the 4EAT tester ON. • Selector lever in the D range. • Accelerate the vehicle at half throttle. • Accelerate the vehicle at full throttle. • Operate kickdown (sudden acceleration). • Compare the throttle voltage, shifting gear, drum speed, and vehicle speed with the 2.0L / 2.5L D Range Shift Point Chart and Diagrams. • **Are the shift points correct?**	Yes ▶ No (problem with upshift) ▶ No (problem with downshift) ▶	GO to RT3. GO to the Upshift Symptom Chart. GO to the Downshift Symptom Chart.

D Range Shift Point Chart

Range	Mode	Throttle Condition (Throttle Sensor Voltage)	Shifting Gears	2.0L Engine Drum Speed rpm	2.0L Engine Vehicle Speed mph (km/h)	2.5L Engine Drum Speed rpm	2.5L Engine Vehicle Speed mph (km/h)
D	Power[1]	Fully open (3.0–4.4 volts)	1 → 2	5650–6250	36–40 (58–64)	6100–6700	37–41 (60–66)
			2 → 3	5650–6050	65–70 (105–113)	5850–6300	65–70 (105–113)
			3 → O/D	5650–6000	100–107 (162–172)	6150–6550	105–111 (169–179)
		Half throttle (1.6–2.2 volts)	1 → 2	3500–4500	22–29 (36–46)	4250–5200	25–30 (40–49)
			2 → 3	4000–4950	46–57 (74–92)	4050–5100	43–54 (69–87)
			3 → O/D	4350–5200	77–92 (124–149)	4300–5300	71–86 (114–139)
		Fully closed (0.1–1.1 volts)	O/D → 3	400–550	10–14 (17–23)	450–600	10–14 (17–23)
			3 → 1	300–500	5–9 (8–14)	400–650	7–11 (11–17)
		Kickdown	O/D → 3	3800–4050	96–102 (155–165)	3600–3850	84–90 (135–145)
			3 → 2	3350–3650	60–64 (96–104)	3250–3550	53–58 (86–94)
			2 → 1	2300–2650	27–30 (44–49)	2600–2950	27–31 (44–50)
	Normal[1]	Fully open (3.0–4.4 volts)	1 → 2	5650–6250	36–40 (58–64)	6100–6700	37–41 (60–66)
			2 → 3	5650–6050	65–70 (105–113)	5850–6300	65–70 (105–113)
			3 → O/D	5650–6000	100–107 (162–172)	6150–6500	105–111 (169–179)
			Lockup ON	3950–4200	100–107 (162–172)	4300–4550	105–111 (169–179)
		Half throttle (1.6–2.2 volts)	1 → 2	2750–3500	17–22 (28–36)	3500–4350	20–25 (33–41)
			2 → 3	2950–3800	34–44 (55–71)	3150–4050	33–43 (54–69)
			3 → O/D	3850–4700	68–84 (110–135)	3500–4550	57–74 (92–120)
			Lockup ON	2700–2900	68–74 (110–119)	3300–4000	77–92 (124–149)
		Fully closed (0.1–1.1 volts)	O/D → 3	400–550	10–14 (17–23)	450–600	10–14 (17–23)
			3 → 1	300–500	5–9 (8–14)	400–650	7–11 (11–17)
		Kickdown	O/D → 3	3800–4050	96–102 (155–165)	3600–3850	84–90 (135–145)
			3 → 2	3350–3650	60–64 (96–104)	3250–3550	53–58 (86–94)
			2 → 1	2300–2650	27–30 (43–49)	2600–2950	27–31 (44–50)

[1] The Transaxle Control Module (TCM) determines the mode of operation according to the speed that the accelerator pedal is depressed.

CJ10695-B

D Range Shift Point Chart.

D Range Shift Point Diagrams

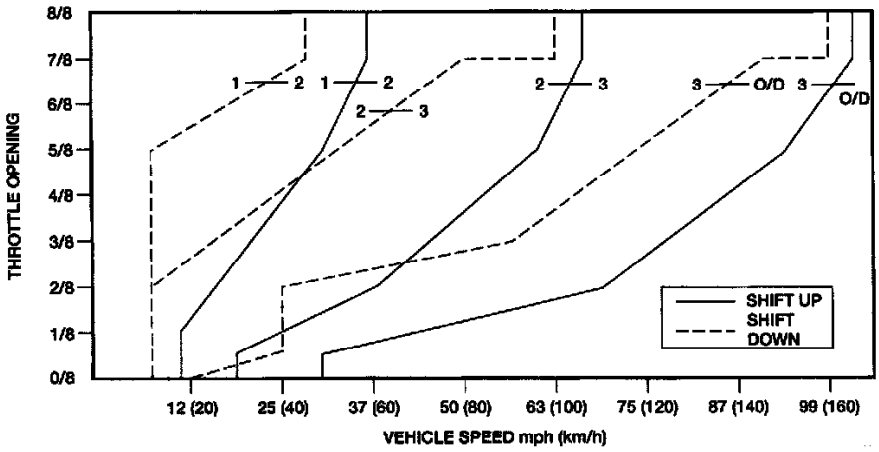

D Range (POWER Mode) Shift Point Diagram.

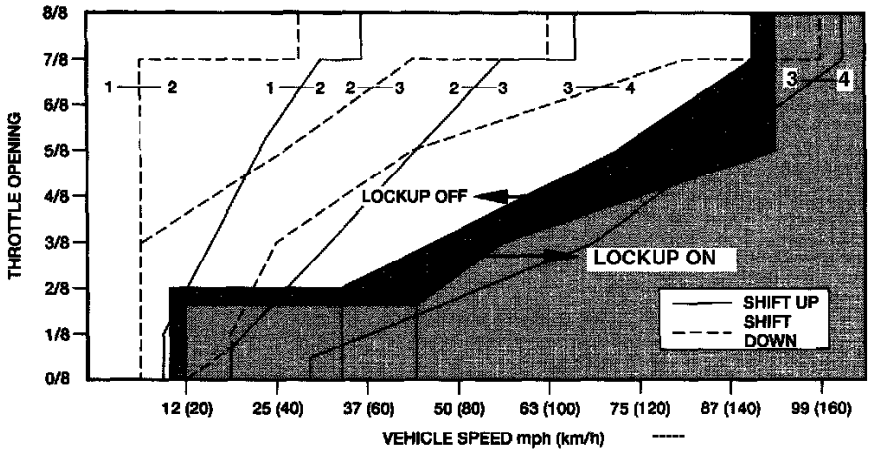

D Range (Normal Mode) Shift Point Diagram.

RT3

TEST STEP		RESULT ▶	ACTION TO TAKE
RT3	CHECK 2 RANGE SHIFT POINTS • Connect Rotunda 4EAT Tester 007-0037B or equivalent to the Powertrain Control Module (PCM) for the 2.0L engine, or to the Transaxle Control Module for the 2.5L engine. • Key ON, engine running. • Drive the vehicle until the ATF reaches normal operating temperature 60-70°C (140-160°F). • Turn the 4EAT Tester ON. • Selector lever in the 2 range. • Accelerate the vehicle. • Compare the shifting gear, drum speed, and vehicle speed with the 2.0L/2.5L 2 Range Shift Point Diagrams and Chart. • **Are the shift points correct?**	Yes No (problem with upshift) No (problem with downshift)	▶ GO to RT4. ▶ GO to the Upshift Symptom Chart. ▶ GO to the Downshift Symptom Chart.

2 Range Shift Point Chart

Range	Shifting Gears	2.0L Engine		2.5L Engine	
		Drum Speed rpm	Vehicle Speed mph (km/h)	Drum Speed rpm	Vehicle Speed mph (km/h)
2	Lockup ON (3rd)	3650–4000	65–71 (105–115)	3650–4000	65–71 (105–115)
	O/D → 3	4000–4100	101–105 (162–168)	4300–4450	105–109 (169–175)
	3 → 2	3400–3600	60–64 (97–103)	3350–3550	57–61 (92–98)

CD10898-B

2 Range Shift Point Chart.

2 Range Shift Point Diagrams

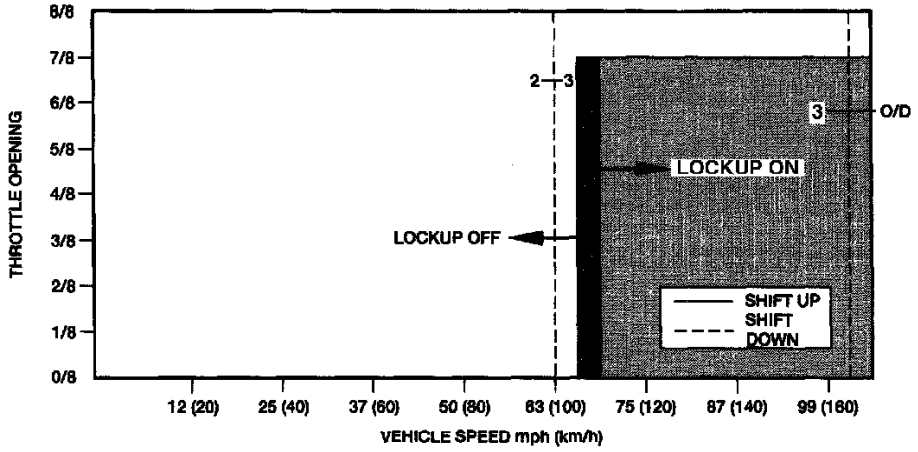

2 Range Shift Point Diagram.

RT4

TEST STEP	RESULT	ACTION TO TAKE
RT4 CHECK 1 RANGE SHIFT POINTS • Connect a Rotunda 4EAT Tester 007-0037B or equivalent to the Powertrain Control Module (PCM) for the 2.0L engine, or to the Transaxle Control Module (TCM) for the 2.5L engine. • Key ON, engine running. • Drive the vehicle until the ATF reaches normal operating temperature 60°-70°C (140°-160°F). • Turn the 4EAT Tester ON. • Selector lever in the 1 range. • Accelerate the vehicle. • Compare the shifting gear, drum speed, and vehicle speed with the 2.0L/2.5L 1 Range Shift Point Chart and Diagram. • **Are the shift points correct?**	Yes No (problem with upshift) No (problem with downshift)	GO to RT5. GO to the Upshift Symptom Chart. GO to the Downshift Symptom Chart.

1 Range Shift Point Chart

Range	Shifting Gears	2.0L Engine		2.5L Engine	
		Drum Speed rpm	Vehicle Speed mph (km/h)	Drum Speed rpm	Vehicle Speed mph (km/h)
1	2 → 1	2300–2650	26–30 (43–49)	2300–2650	26–30 (43–49)

CD10900–B

1 Range Shift Point Chart.

1Range Shift Point Diagram

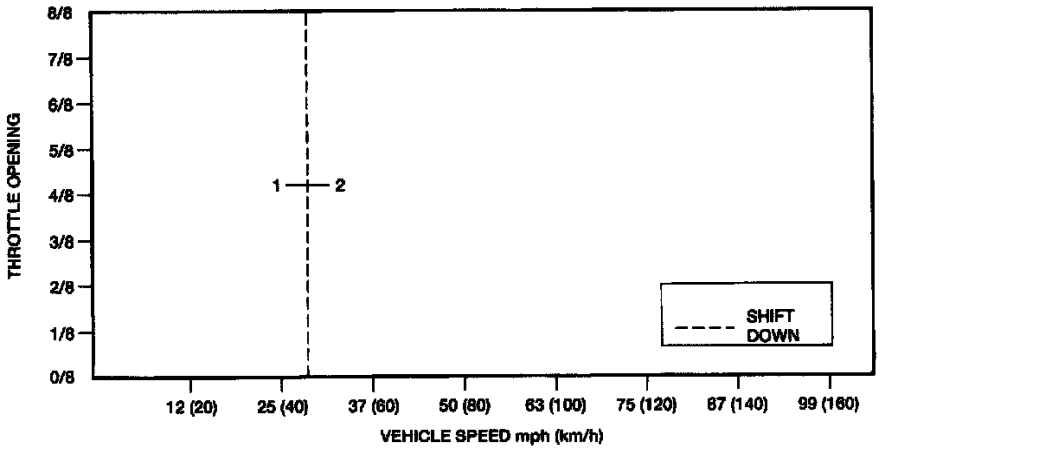

D10901-B

1 Range Shift Point Diagram.

TEST STEP		RESULT ▶	ACTION TO TAKE
RT5	CHECK FOR SLIPPAGE		
• Connect a Rotunda 4EAT Tester 007-0037B or equivalent to the Powertrain Control Module (PCM) for the 2.0L engine, or to the Transaxle Control Module (TCM) for the 2.5L engine. • Connect a Rotunda Digital Dwell-Tach-Volts Analyzer 059-00007 or equivalent. • Key ON, engine running. • Drive the vehicle until the ATF reaches normal operating temperature 140°-160°F (60°-70°C). • Using the Slippage Chart, compare the vehicle speed, engine speed, and drum speed. • **Is the vehicle speed or engine speed different than indicated in the Slippage Chart?**		Yes ▶ No ▶	INSPECT the transaxle components indicated in the Action To Take column in the chart below. GO to RT6.

Slippage Chart

Driving Condition		Speed Type	Engine	Drum Speed (rpm)				Action to Take
Gear	Range			1000	2000	3000	4000	
1st	1 range	Vehicle speed mph (km/h)	2.0L	6 (10)	12 (20)	19 (31)	25 (41)	INSPECT forward clutch. INSPECT coasting clutch. INSPECT low and reverse clutch. INSPECT one-way sprag and roller clutch.
			2.5L	6 (10)	12 (20)	19 (30)	24 (39)	
1st	D range NORMAL		2.0L	6 (10)	12 (20)	19 (31)	25 (41)	INSPECT forward clutch. INSPECT one-way sprag clutch. INSPECT one-way roller clutch.
			2.5L	6 (10)	12 (20)	17 (30)	24 (39)	
2nd	2 range		2.0L	12 (19)	23 (37)	35 (56)	46 (74)	INSPECT forward clutch. INSPECT coasting clutch. INSPECT 2 – 4 band. INSPECT one-way sprag clutch.
			2.5L	11 (18)	22 (36)	33 (54)	45 (72)	
O/D	D range NORMAL		2.0L	25 (41)	51 (82)	76 (123)	102 (164)	INSPECT forward clutch. INSPECT 3 – 4 clutch. INSPECT 2 – 4 band. INSPECT one-way sprag clutch.
			2.5L	24 (39)	49 (79)	73 (118)	98 (158)	
O/D	D range NORMAL in Lockup	Engine speed in Lockup (rpm)	2.0L 2.5L	1000 (rpm)	2000 (rpm)	3000 (rpm)	4000 (rpm)	INSPECT torque converter.

CD10902-C

RT6	CHECK SHIFT FEEL		
• Drive the vehicle until the ATF reaches normal operating temperature (above 140°F). • Selector lever in the D range. • Set the speed control OFF (if applicable). • Drive the vehicle from closed throttle to a safe Wide Open Throttle (WOT) speed. • **Does the shift feel excessively harsh or slipping?**		Yes ▶ No ▶	GO to the Shift Feel Symptom Chart. GO to RT7.

TEST STEP		RESULT ▶	ACTION TO TAKE
RT7	CHECK ENGINE BRAKING IN 2 RANGE		
	• Place the selector lever in 2 range. • Set the speed control to OFF (if applicable). • Drive the vehicle. • Release the accelerator pedal. • **Is engine braking felt on deceleration?**	Yes ▶ No ▶	GO to RT8. GO to the Downshift Symptom Chart.
RT8	CHECK ENGINE BRAKING FROM 2 TO 1 RANGE		
	• Set the speed control to OFF (if applicable). • Place the selector lever in 2 range. • Drive the vehicle until 3rd gear is obtained. • While at the low end of the 3rd gear speed range, shift the selector lever into the 1 range. • **Is engine braking felt?**	Yes ▶ No ▶	GO to RT9. GO to the Downshift Symptom Chart.
RT9	CHECK ENGINE BRAKING IN 1 RANGE		
	• Set the speed control to OFF (if applicable). • Place the selector lever in 1 range. • Drive the vehicle in 1st gear. • Decelerate the vehicle. • **Is engine braking felt?**	Yes ▶ No ▶	GO to RT10. GO to the Downshift Symptom Chart.
RT10	PERFORM VEHICLE STOPPING TEST		
	• Drive vehicle on a level surface. • Maximum speed of 2 mph. • Shift selector lever into P range. • **Does the vehicle stop?**	Yes ▶ No ▶	Road Test OK. RETURN to 4EAT Symptom Chart. PERFORM parking pawl inspection.

Automatic Transmission/Transaxle: Removal and Replacement

REMOVAL

1. Disconnect battery cables from battery, then remove battery hold-down, battery, and battery tray from vehicle.
2. Remove air cleaner assembly.
3. Remove shift cable from Manual Lever Position **(MLP)** switch arm. Use screwdriver to pry cable from switch arm.
4. Remove shift cable from cable bracket as follows:
   a. Remove lock tab retainer.
   b. Press in on lock tabs to release cable, then pull cable through bracket.
5. Disconnect MLP switch electrical connector.
6. On models with 2.0L engine, disconnect heated oxygen sensor electrical connector.
7. On models with 2.5L engine, disconnect two heated oxygen sensor electrical connectors.
8. On all models, disconnect electrical connector, then remove wiring harness bracket from cable bracket.
9. On models with 2.5L engine, remove starter motor.
10. On all models, disconnect Vehicle Speed Sensor **(VSS)**.
11. Remove ground wire bracket, then the ground wire.
12. On 1993 models, remove harness support bracket to engine block located at rear transaxle mount.
13. On 1994-1996 models, remove harness support bracket to generator located at rear transaxle mount.
14. On all models, disconnect and plug oil cooler outlet and inlet hoses, then remove four transaxle to engine mount bolts.
15. Install Three Bar Engine Support tool No. 014-00750 or equivalent.
16. Remove lefthand transaxle mount nuts and bolts, then the through bolt.
17. Remove fuel filter bracket nuts from lefthand transaxle mount, then position fuel filter and bracket aside.
18. Remove lefthand transaxle mount, then disconnect pulse signal generator electrical connector.
19. Raise and support vehicle, then remove front wheel and tire assemblies and both splash shields.
20. Remove transverse member, then the transaxle cradle.
21. Remove transaxle lower mount bolts, then the lower mount.
22. Remove halfshafts, then install transaxle plug set tool No. T88C-7025-AH or equivalent, into differential side gears.

    CAUTION: Failure to install transaxle plugs may allow differential side gears to become improperly positioned.

23. On models with 2.0L engine, remove intake manifold support bracket.
24. On all models, disconnect transaxle vent hose and dipstick tube.
25. On models with 2.0L engine, remove starter motor.
26. On models with 2.5L engine, remove inspection cover.
27. On all models, remove four torque converter to flex plate nuts.
28. Position transaxle jack under transaxle, then secure transaxle to jack.
29. Remove engine-to-transaxle and transaxle-to-engine mounting bolts.
30. Remove three rear transaxle mount bolts.
31. Separate transaxle from engine block, then slightly tilt transaxle and engine to ease removal.
32. Remove transaxle from engine, then lower transaxle from vehicle.

INSTALLATION

1. Place transaxle on transaxle jack. Ensure transaxle is secure.
2. Raise transaxle to proper height, then align torque converter studs and flexplate holes.

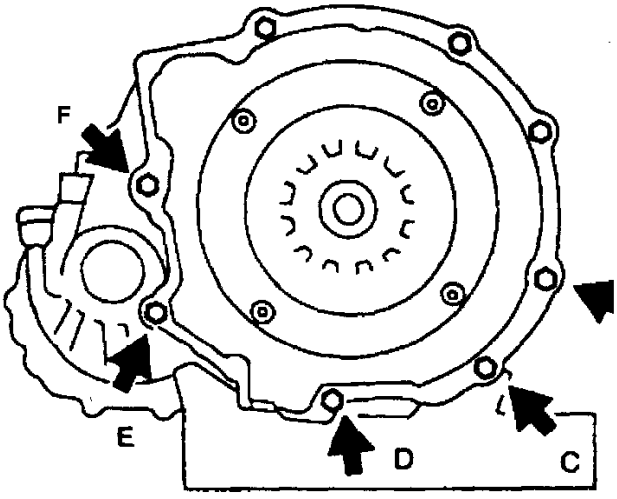

FM5029300597000X

Transaxle To Engine Bolt Tightening Sequence With 2.0L Engine

3. On models with 2.0L engine, install transaxle to engine mounting bolts. Torque mounting bolts (B) to **50-73 ft lbs**, (C) to **28-38 ft lbs**, and (F) to **50-73 ft lbs**.
4. Install engine to transaxle mounting bolts. Torque mounting bolts (D) to **14-18 ft lbs**, (E) to **28-38 ft lbs**, and (F) to **50-73 ft lbs**.

   NOTE: Use the Transaxle To Engine Bolt Tightening Sequence image for steps 3 and 4.

5. On models with 2.5L engine, install engine to transaxle mounting bolts. Torque bolts to **50-73 ft lbs**.
6. On all models, install rear transaxle mount bolts. Torque bolts to **50-68 ft lbs**.
7. On models with 2.5L engine, install inspection cover.
8. On models with 2.0L engine, install intake manifold support bracket and bolts. Torque bolts to **27-38 ft lbs**.
9. Install starter motor.
10. On all models, connect transaxle vent hose, then install dipstick tube. Torque dipstick mounting bolts to **71-88 in lbs**.
11. Remove transaxle plugs, then install halfshafts.
12. Install transaxle lower mount. Torque lower mount to **5O-68 ft lbs**.
13. Remove jack from under transaxle.

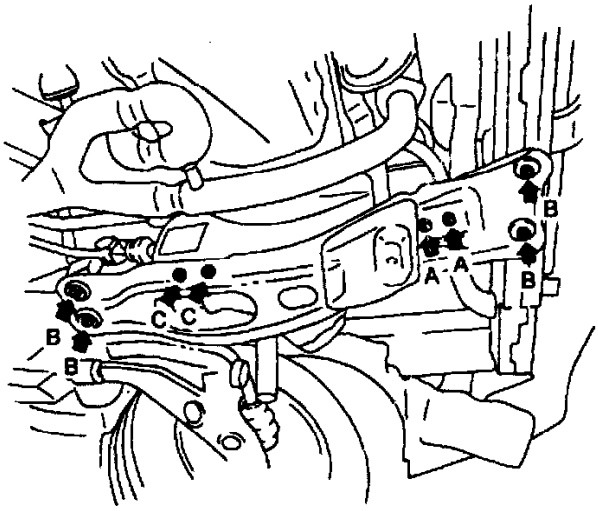

TIGHTENING TORQUE
A: 75 – 104 N·m (55 – 77 LB-FT)
B: 67 – 93 N·m (50 – 68 LB-FT)
C: 44 – 60 N·m (32 – 44 LB-FT)

FM5029300598000X

Tightening Transaxle Cradle Nuts And Bolts

14. Install transaxle cradle. Torque cradle bolts (A) to **55-77 ft lbs**, (B) to **50-68 ft lbs**, and (C) to **32-44 ft lbs**.
15. Install transverse member. Torque bolts to **68-96 ft lbs**.
16. Install splash shields. Torque mounting screws to **71-88 in lbs**.
17. Install front wheel and tire assemblies. Torque wheel lug nuts to **66-86 ft lbs**.
18. Lower vehicle.
19. Install transaxle to engine mounting bolts. Torque bolts.
20. Connect VSS, then install ground wire bracket and ground wire.
21. Connect pulse signal generator electrical connector.
22. On 1993 models, install harness support bracket to engine block located at rear transaxle mount.
23. On 1994 models, install harness support bracket to generator located at rear transaxle mount.
24. On all models, install lefthand transaxle mount, nuts, and bolt. Torque nuts and bolts to **5O-68 ft lbs**.
25. Install lefthand transaxle mount through bolt. Torque through bolt to **63-86 ft lbs**.
26. Remove engine support bar.
27. Install fuel filter bracket to lefthand transaxle mount. Torque bracket bolts to **71-88 in lbs**.
28. Connect oil cooler outlet and inlet hoses.
29. On models with 2.5L engine, install starter motor.
30. On all models, connect electrical connector.
31. On models with 2.0L engine, connect heated oxygen sensor electrical connector.
32. On models with 2.5L engine, connect two heated oxygen sensor electrical connectors.
33. On all models, install shift cable to cable bracket as follows:
    a. Insert shift cable through cable bracket.
    b. Pull cable until lock tabs engage, then install lock tab retainer.
34. Install shift cable on MLP switch arm, then connect MLP switch electrical connector.
35. Snap wiring harness bracket on cable bracket, then install air cleaner assembly.
36. Install battery tray, battery, and battery hold-down, then connect battery cables.
37. Add proper transaxle fluid, then check for leaks and check fluid level.

Automatic Transmission/Transaxle: Overhaul

Disassembly

DISASSEMBLE

1. Remove torque converter from converter housing.
2. Support transaxle using a suitable stand, ensuring not to tilt during disassembling.
3. Pull out oil pump shaft by hand.
4. Remove fluid dipstick and oil filler tube.

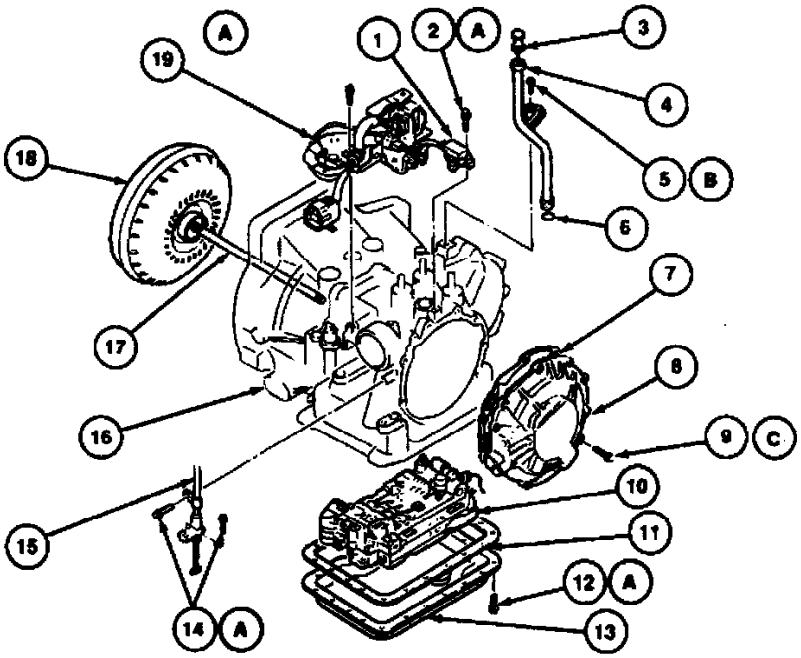

Item	Part Number	Description
1	7F040	Pulse Signal Generator (PSG)
2	—	Pulse Signal Generator (PSG) Bolt
3	7A020	Fluid Level Indicator
4	7A228	Oil Filler Tube
5	—	Oil Filter Tube Bolt
6	—	O-Ring
7	7A136	Oil Pump Gasket
8	7A103	Oil Pump
9	—	Oil Pump-to-Transaxle Case Bolt (10 Req'd)
10	7A100	Main Control Valve Body
11	7A191	Oil Pan to Case Gasket

Item	Part Number	Description
12	—	Transmission Oil Pan Bolt (19 Req'd)
13	7A194	Transmission Fluid Pan
14	—	Throttle Valve Control Actuating Cable Bracket-to-Transaxle Bolt (2 Req'd)
15	7F042	Throttle Valve Control Actuating Cable
16	7000	Transaxle
17	7B328	Oil Pump Shaft
18	7902	Torque Converter
19	7A247	Transmission Range (TR) Switch

FM5029501108000X

Transaxle External Components, (Capri, Escort, And Tracer)

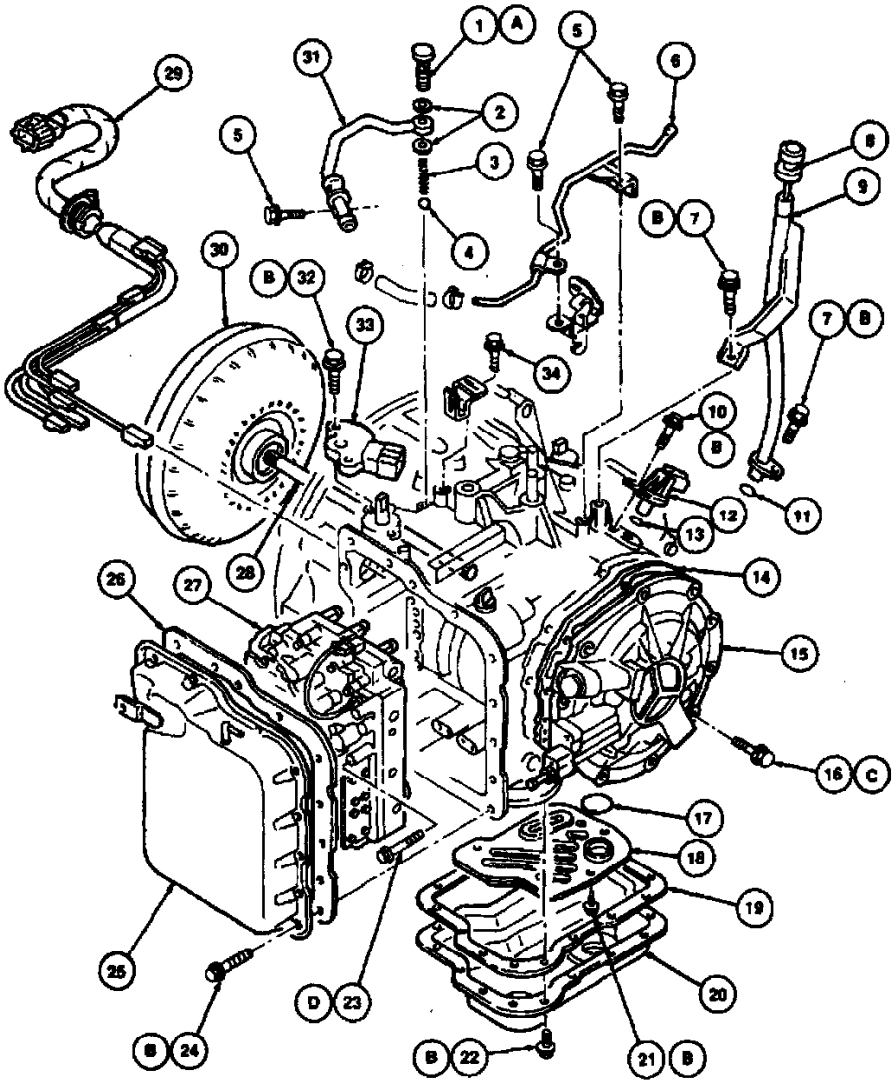

Item	Part Number	Description
1	—	Oil Cooler Line Bolt
2	—	Washers (2 Req'd)
3	7G315	Converter Drain-Back Valve Spring
4	—	Steel Ball
5	—	Oil Cooler Line Bracket Bolts (3 Req'd)
6	7A031	Fluid Cooler Tube (Inlet)
7	—	Oil Filler Tube Bolt (2 Req'd)
8	7A020	Fluid Level Indicator
9	7A228	Oil Filler Tube
10	—	Pulse Signal Generator (PSG) Bolt

Item	Part Number	Description
11	—	Oil Filler Tube O-Ring
12	7F040	Pulse Signal Generator (PSG)
13	—	O-Ring (Part of 7F040)
14	7A136	Oil Pump Gasket
15	7A103	Oil Pump
16	—	Oil Pump Bolt (10 Req'd)
17	7A469	Oil Pan Screen Ring
18	7A098	Oil Pan Screen
19	7A191	Oil Pan to Case Gasket
20	7A194	Transmission Fluid Pan
21	—	Oil Pan Screen Bolt
22	—	Transmission Oil Pan Bolt (17 Req'd)

Item	Part Number	Description
23	—	Main Control Valve Body Bolt (8 Req'd)
24	—	Main Control Cover Bolt (17 Req'd)
25	7G004	Main Control Cover
26	7F396	Main Control Cover Gasket
27	7A100	Main Control Valve Body
28	7B326	Oil Pump Shaft
29	—	Transaxle Wiring Harness (Part of 7A100)
30	7902	Torque Converter
31	7A031	Fluid Cooler Tube (Outlet)
32	—	Transmission Range (TR) Switch Bolt (2 Req'd)
33	7A247	Transmission Range (TR) Switch
34	—	Wiring Bracket Bolt

Transaxle External Components, (Probe)

5. Remove pulse generator, fluid temperature switch, and neutral safety or manual lever position switch, as shown in the Transaxle External Components images.
6. Remove back-up lamp switch, then disconnect solenoid connectors and harness.
7. Remove transaxle vent hose then the oil pipes, oil hoses, and switch box as an assembly.
8. Remove spring and steel ball using pencil magnet.

NOTE: Ensure ball is removed from case.

9. Remove oil pan and gasket.
10. Remove oil strainer and 0-ring, then the control valve body cover and gasket.
11. Remove throttle cable attaching bolt and bracket, then the cable from throttle cam of valve body.
12. Pinch teeth of solenoid connector and remove it by pushing inward.
13. Remove Transaxle Oil Temperature **(TOT)** sensor, then remove electrical connector from transaxle case. Discard 0-ring.
14. Remove control valve body and oil pump as an assembly.
15. Remove piston stem from servo, then the turbine shaft and snap ring.
16. Pull reverse and forward drum and remove clutch assembly.

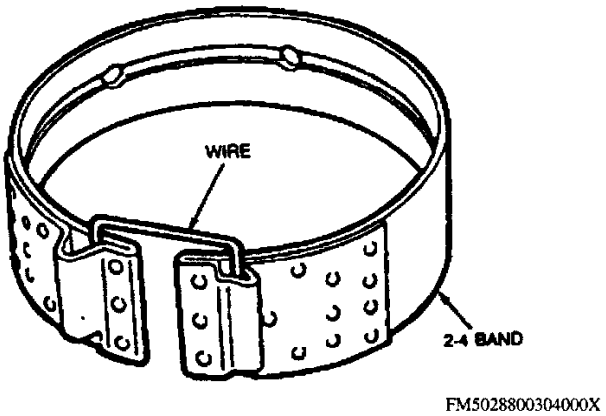

2-4 Band Removal

17. Remove 2-4 brake band. Secure band with wire to prevent warping.
18. Remove small sun gear and one-way clutch.
19. Pull anchor shaft while holding strut, then remove strut.
20. Remove snap ring, servo and spring.

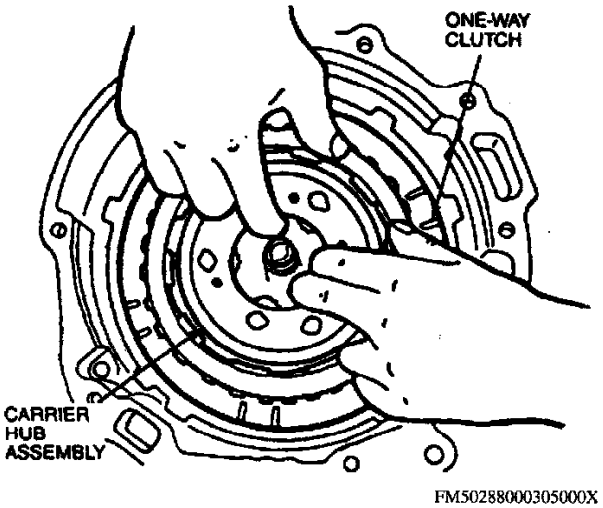

One-Way Clutch And Carrier Assembly Removal

21. Remove snap ring, then the one-way clutch together with carrier hub assembly.
22. Remove low and reverse clutch assembly and snap ring.
23. Remove retaining plate, drive, and driven plates.
24. Remove snap ring, then the internal gear from 3-4 clutch drum.
25. Remove 0-ring from turbine shaft at converter housing side.

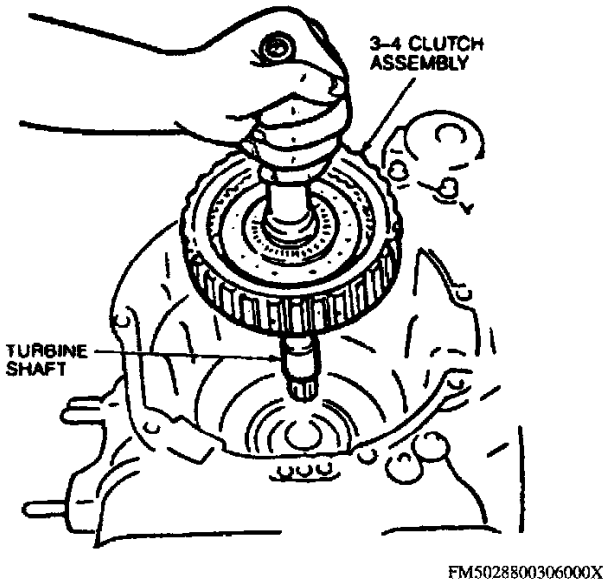

Turbine Shaft And 3-4 Clutch Assembly

26. Pull out turbine shaft and 3-4 clutch assembly, then slide off clutch assembly.
27. Remove transaxle attaching bolts, then the transaxle case by lightly tapping with a plastic hammer.
28. Remove thrust washer and bearing from output shell, then remove output shell from output gear.
29. Using return spring compressor tool No. T88C-77000-AH, or equivalent, remove low and reverse brake assembly.
30. Evenly compress low and reverse brake piston spring retainer assembly enough to remove snap ring, then remove snap ring, return spring, and retainer.

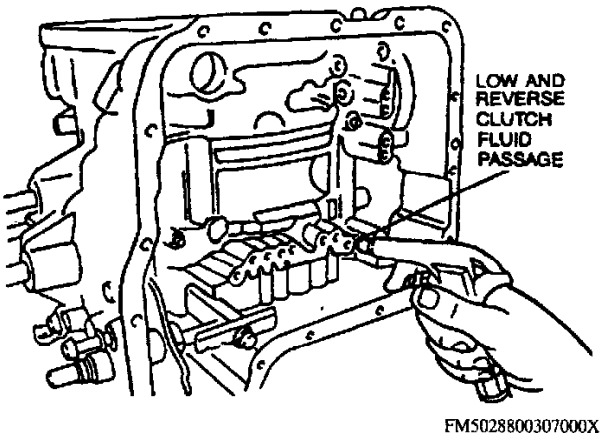

Applying Compressed Air Through Low And Reverse Clutch

31. Using compressed air through fluid passage, remove low and reverse clutch piston.
32. Remove detent ball plug, washer, spring, detent ball, and bracket, then loosen nut and pull out manual shaft.
33. Remove attaching nut, washer, spacer, and manual plate.
34. Remove actuator support, then the snap ring and parking assist lever.
35. Remove snap ring and pull parking shaft, spring, and parking pawl.
36. Remove differential.
37. Remove 2-3 accumulator.
38. Remove orifice check valve, spring, and 0-ring.
39. Remove bolt from bearing housing to gain access to roll pin. Using a suitable pin punch and hammer, remove roll pin from bearing housing, then discard roll pin.
40. Remove bearing housing. Lightly tap on housing with plastic hammer or suitable tool.
41. Remove idle and output gear assemblies by tapping from torque converter side.
42. Using seal remover tool No. 1175-AC and impact slide hammer tool No. T50T-100-A or equivalents, remove converter seal from bearing/stator support.
43. Remove eight bearing/stator mounting bolts, then the converter housing from transaxle.
44. Using step plate adapter tool No. D80L-630-10 or equivalent, press bearing/stator support out of converter housing.
45. Using stator and driven sprocket bearing remover tool No. T86P-70043-A, disc brake piston remover tool No. T73L-2196-A, and impact slide hammer tool No. T50T-100-A or equivalents, remove differential bearing cups.
46. Remove adjustment shim(s).
47. Remove differential oil seals using bearing cup puller tool No. T77F-1102-A and impact slide hammer tool No. T50T-100-A or equivalents.

Assembly

ASSEMBLE

NOTE: The composition clutch plates, valve body gaskets, bands, and synthetic seals should not be cleaned in a vapor degreaser, or with any type of detergent solution. To clean these parts, wipe them off with a lint-free cloth. Soak new clutch plates or bands in specified automatic transaxle fluid for at least two hours before assembly. Apply specified automatic transaxle fluid to all seal rings, rotating parts, 0-rings, and sliding parts.

1. Before installing bearing housing, adjust output gear bearing preload as follows:

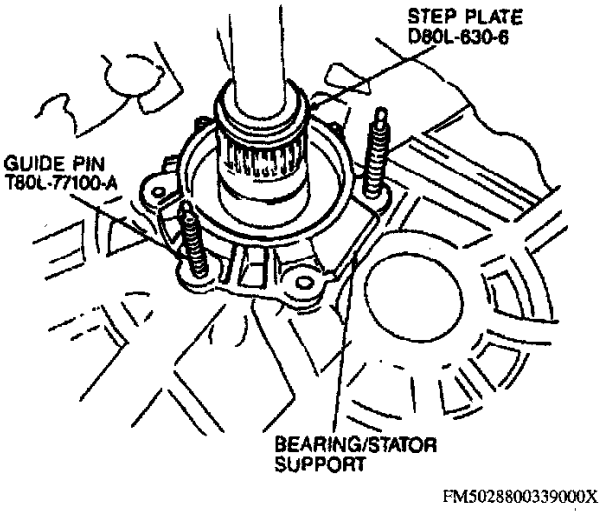

Bearing And Stator Support Alignment

a. Position bearing/stator support using valve body guide pins tool No. T80L-77100-A or equivalent, then press support into converter using step plate adapter tool No. D80L-630-6 or equivalent.
b. Remove bearing cup and adjustment shim(s) from bearing housing, then place bearing cup over output gear bearing.

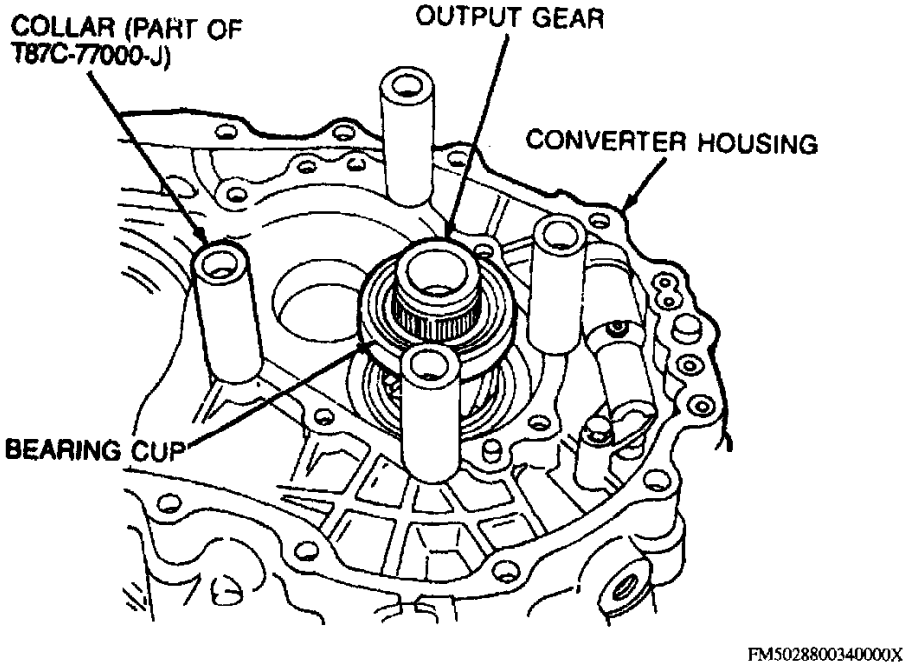

Collars On Converter Housing Installation

c. Place four collars, part of shim selection set tool No. T870-77000-J or equivalent, on converter housing.

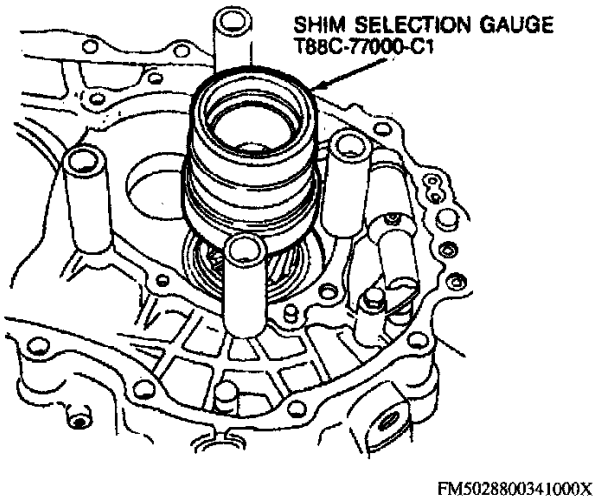

Shim Selection Gauge On Output Gear

d. Place shim selector gauge tool No. T880-77000-C1 or equivalent, on output gear. Turn both halves of selector to eliminate any gap between them.
e. Place bearing housing on collars.
f. Install four bolts tool No. T880-77000-C or equivalent, with washers. Torque bolts to **14-18 ft lbs**.
g. Position preload torque adapter tool No. T88C-77000-DH or equivalent, on output gear. Using pins provided in shim selection set tool No. T87C-77000J or equivalent, loosen gauge halves until all free play is removed and bearings are seated.
h. Measure drag on output gear bearing using an in lb torque wrench and torque adapter.
i. Using pins provided, turn gauge until a reading of **4.3-7.8 in lbs** is obtained on torque wrench.
j. Use feeler gauge to measure gap in between both halves of gauge. Measure gap at four spots, **90°** intervals.
k. On 1993-1996 Probe models, select shim from output gear shim selection kit No. F32Z-7F405-A or equivalent.
l. On all other models, select appropriate adjustment shim(s) from chart. Select shim close to measurement or slightly larger.

NOTE: Do not use more than seven shims.

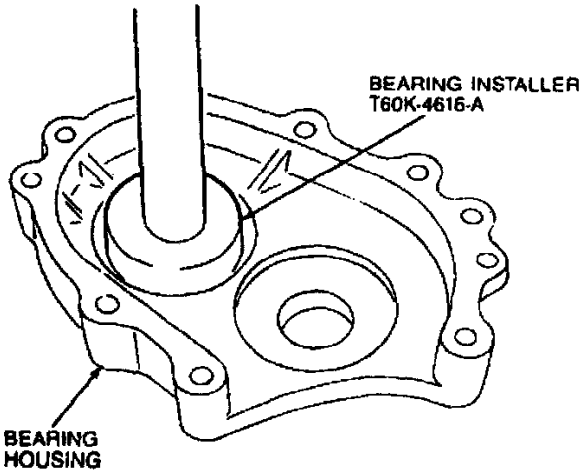

FM5028800342000X

Shim Into Bearing Housing Installation

m. Remove bolts, washers, bearing housing gauge and bearing cup, then press selected shim(s) and bearing cup into bearing housing, using bearing installer tool No. T60K-4616-A or equivalent.
n. Install bearing housing. Torque housing bolts.
o. Measure bearing preload.
p. On 1993-1996 Probe models, preload reading should be **10-17 in lbs**.
q. On all other models, preload reading should be **0.26-7.81 in lbs**.
r. If preload measurements are not within limits, repeat gauging process.

2. Adjust differential side bearing preload as follows:
   a. Remove rear bearing cup and shims from transaxle case using stator and driven sprocket bearing remover tool No. T86P-70043-A, disc brake piston remover tool No. T73L-2196-A, and impact slide hammer tool No. T50T-100-A, or equivalents.
   b. Install front bearing cup in converter housing using driver handle tool No. T80T-4000-W and differential bearing cup replacer tool No. T88C-77000-FH, or equivalents.
   c. Install differential into converter housing.

Part Number	Shim Thickness
E92Z-7F405-B	0.10mm (0.004 inch)
E92Z-7F405-C	0.12mm (0.005 inch)
E92Z-7F405-D	0.14mm (0.006 inch)
E92Z-7F405-E	0.16mm (0.0063 inch)
E92Z-7F405-F	0.18mm (0.007 inch)
E92Z-7F405-G	0.20mm (0.008 inch)
E92Z-7F405-A	0.50mm (0.020 inch)

FM5028800344000X

Output Gear Shim Thickness Chart

   d. Place six collars, part of shim selection set tool No. T87C-77000J, or equivalent, on converter housing.
   e. Install rear bearing cup over differential bearing.

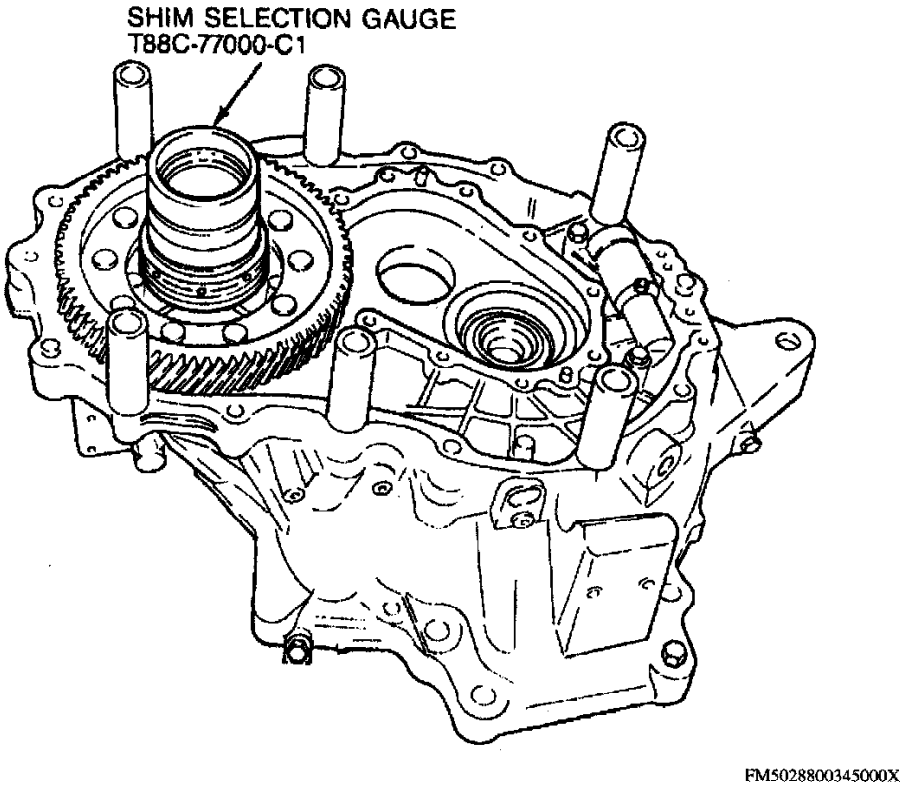

Shim Selection Gauge

f. Place shim selection gauge tool No. T880-77000-C1, or equivalent, on output gear. Turn both halves of selector to eliminate any gap between them.
g. Place transaxle case on collars, then install six screws tool No. T88C-77000-C or equivalent, with washers. Torque screws to **27-38 ft lbs**.
h. Using pins provided, unthread gauge tool until all free play is removed and bearing cup is seated.

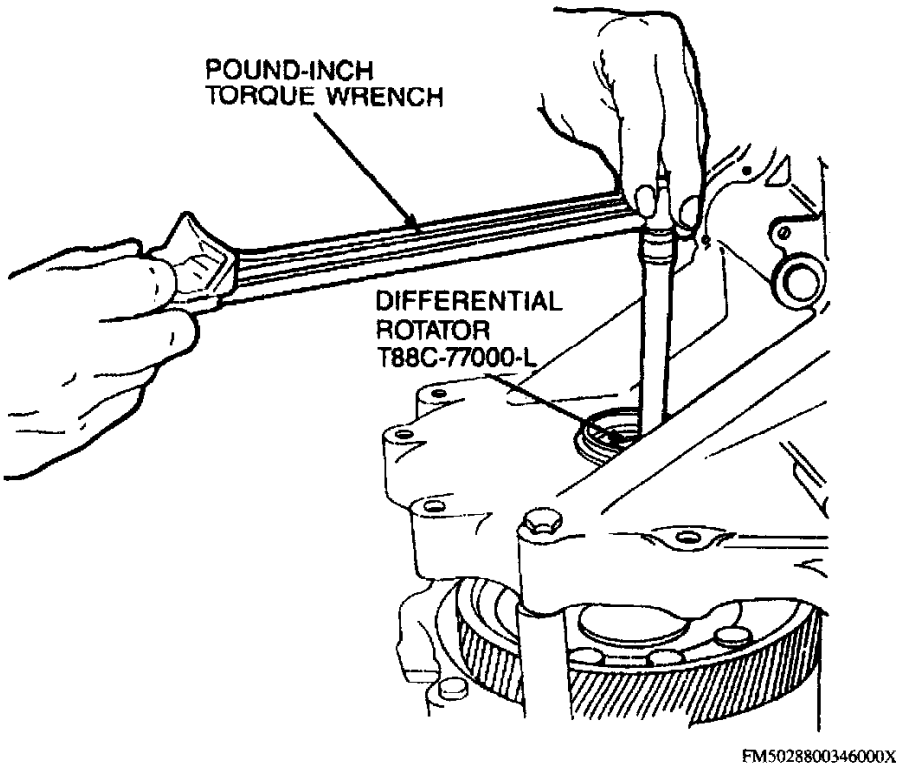

Differential Bearing Drag Measurement

i. Engage differential rotator tool No. T880-77000-L or equivalent, then use an in lb torque wrench and adapter to measure drag on differential bearing.
j. Turn gauge, using pins provided until reading of **4.3 in lbs** is obtained on torque wrench.
k. Use feeler gauge to measure gap in between both halves of gauge. Measure gap at four spots, **90°** intervals.

Part Number	Shim Thickness
E92Z-4067-A	0.10mm (0.004 in.)
E92Z-4067-B	0.12mm (0.005 in.)
E92Z-4067-C	0.14mm (0.006 in.)
E92Z-4067-D	0.16mm (0.0063 in.)
E92Z-4067-E	0.18mm (0.007 in.)
E92Z-4067-F	0.20mm (0.008 in.)
E92Z-4067-N	0.50mm (0.020 in.)
E92Z-4067-Y	1.00mm (0.040 in.)

FM5028800347000X

Differential Shim Thickness Chart

l. Add **0.0079 inch** to the largest measurement, then select shim close to measurement or slightly larger.

CAUTION: Do not use any more than three shims.

m. Remove screws, washers, transaxle case, gauge, and bearing cup.

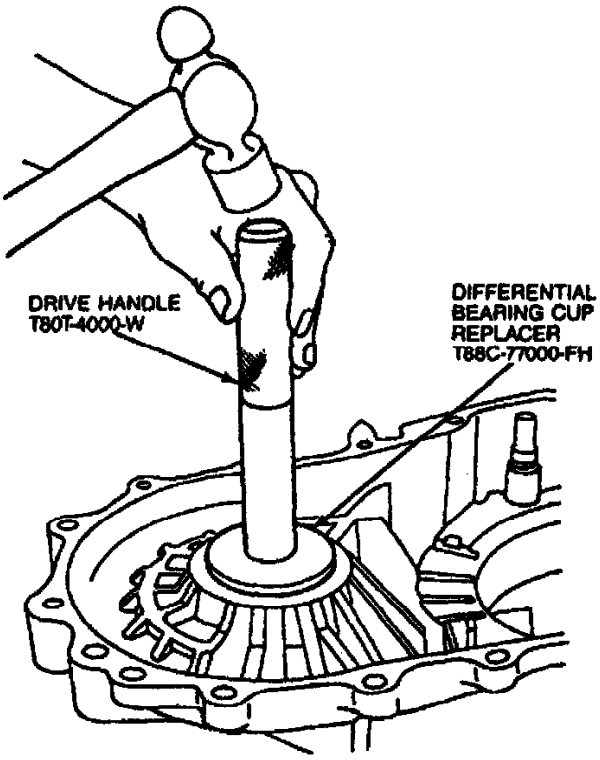

FM5028800348000X

Bearing Cup Into Transaxle Case Installation

n. Install selected shim(s) and bearing cup into transaxle case using drive handle tool No. T80T-4000-W and differential bearing cup replacer tool No. T88C-77000-FH or equivalents.
o. Install transaxle case. Torque transaxle case to converter housing bolts.
p. Measure bearing preload. Preload reading should be **26-35 in lbs**.
q. If preload measurements are not within limits, repeat gauging process.

3. Install idle gear and output gear as an assembly by tapping in with a plastic hammer.
4. Install bearing housing on converter housing. Torque bearing housing mounting bolts.
5. Align groove on idle shaft with matching mark on bearing housing, then tap new roll pin in with suitable punch and hammer.
6. Apply small amount of automatic transaxle fluid to 2-3 accumulator 0-rings, then install 2-3 accumulator in piston assembly. Torque 2-3 accumulator mounting bolts.
7. Install differential adjustment shims and bearing cup, using driver handle tool No. T80T-4000-W and differential bearing cup replacer tool No. T88C-77000-FH or equivalents.
8. On 1992-1994 models, install differential.
9. On all models, install parking pawl and shaft, then the spring and snap ring.
10. Move manual shaft and check operation of parking pawl.
11. Install parking assist lever and snap ring, then the actuator. Torque actuator mounting bolts.

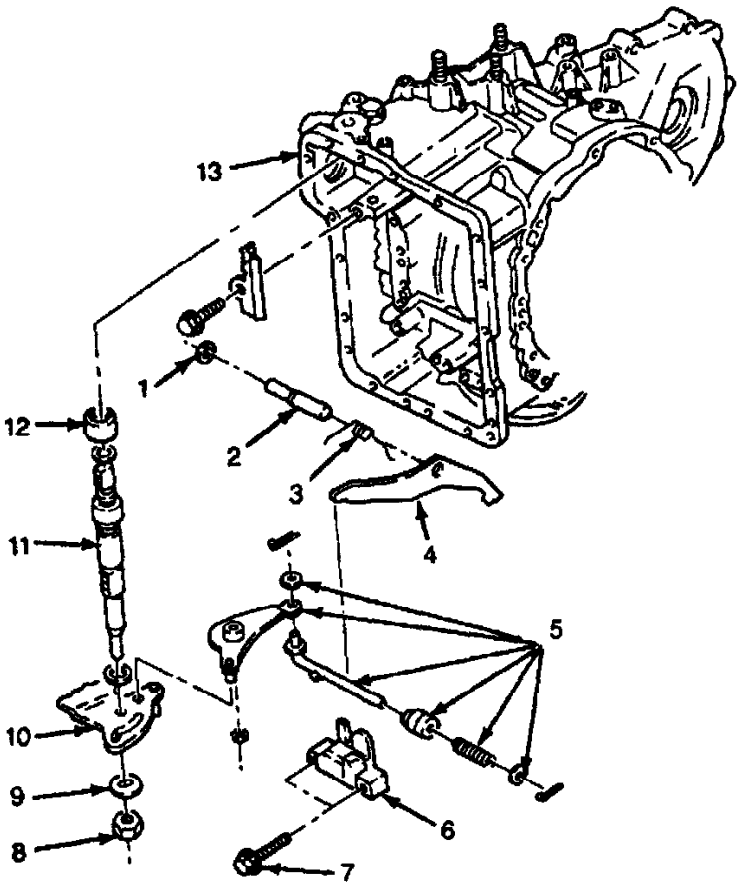

1.	SNAP RING	7.	BOLT
2.	SHAFT	8.	NUT
3.	SPRING	9.	WASHER
4.	PARKING PAWL	10.	MANUAL PLATE
5.	PARKING ASSIST LEVER	11.	MANUAL SHAFT
		12.	SPACER
6.	ACTUATOR SUPPORT	13.	TRANSAXLE CASE

FM5028800349000X

Manual Shaft Components Installation

12. Install manual plate, spacer, washer and nut. Torque manual shaft nut.
13. Install manual shaft bracket. Torque bracket bolt.
14. Install detent ball, spring, washer, and plug. Torque plug.
15. Apply small amount of automatic transaxle fluid to inner and outer faces of low and reverse clutch piston seal. Face outer seal lip toward inside by gently rolling it down around circumference for easier installation.
16. Install low and reverse clutch piston by pushing evenly around circumference, using care not to damage outer seal.
17. Check operation of low and reverse clutch piston as follows:
    a. Pour specified transaxle fluid over piston until it is fully submerged.
    b. Apply compressed air through fluid passage. Ensure no bubbles appear from between piston and seals.
18. Install spring and retainer assembly, then compress assembly with return spring compressor tool No. T88C-77000-AH, or equivalent.
19. Install snap ring, then remove spring compressor.
20. Install output shell to output gear, then the bearing race on output shell.
21. Apply thin coat of suitable sealant to converter housing and transaxle case surfaces, then install 0-rings and transaxle to converter housing. Torque transaxle case attaching bolts.

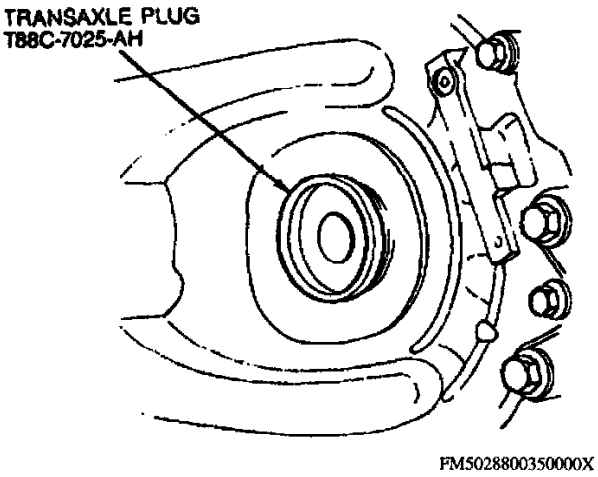

Transaxle Plug Installation

22. Install differential side gear and insert transaxle plugs tool No. T88C-7025-AH, or equivalent.

    CAUTION: Failure to install plugs may cause differential side gears to become improperly positioned.

23. Place 3-4 clutch assembly over turbine shaft, then install assembly into transaxle case.

    NOTE: Ensure thrust washer and needle bearing are installed in correct position.

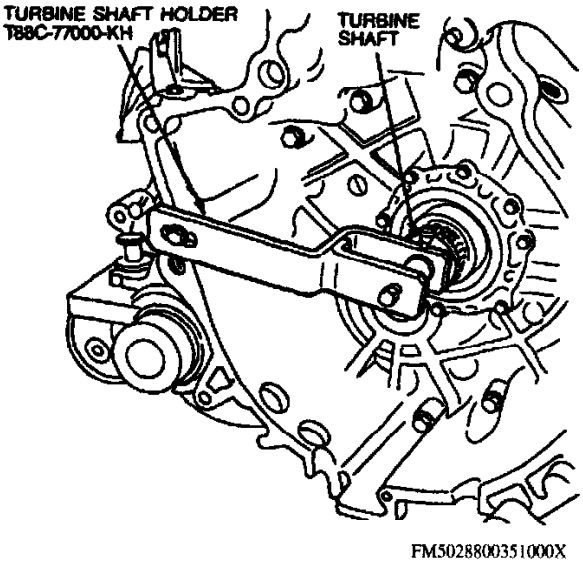

Turbine Shaft Installation

24. Install turbine shaft holder tool No. T88C-7700-KH, or equivalent, and attach to turbine shaft.
25. Install internal gear, then the internal gear snap ring to 3-4 clutch drum.
26. Install carrier hub assembly. Ensure thrust bearing and race are in correct position.
27. Install carrier hub assembly as follows:
    a. Hold turbine shaft to prevent it from rotating.
    b. Rotate carrier hub assembly onto turbine shaft and into 3-4 clutch assembly.

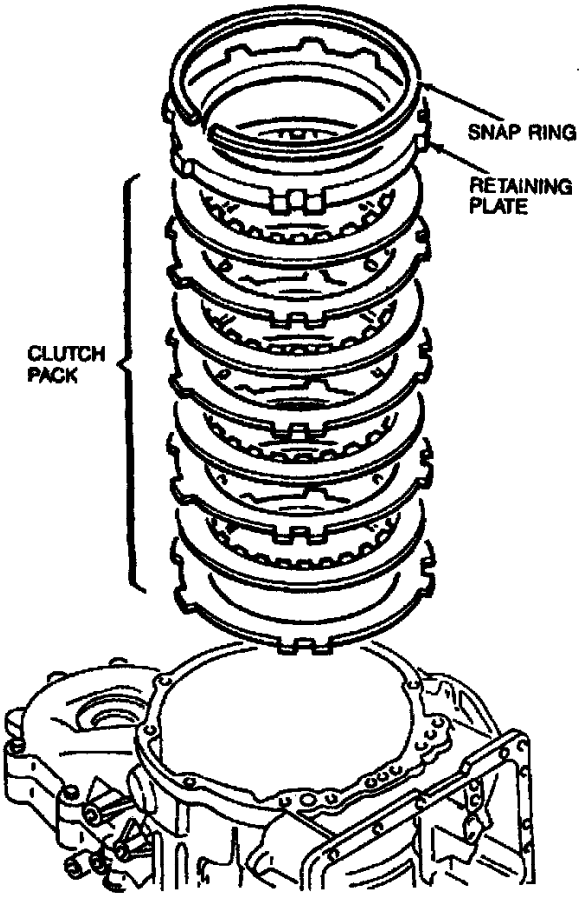

FM5028800352000X

Low And Reverse Clutch Pack Installation

28. Install low and reverse clutch pack, retaining plate and snap ring.
29. Check low and reverse brake clearance as follows:

Part Number	Retaining Plate mm (in)
E92Z-7B066-AD	6.8mm (0.268 inch)
E92Z-7B066-Y	7.0mm (0.276 inch)
E92Z-7B066-Z	7.2mm (0.283 inch)
E92Z-7B066-AA	7.4mm (0.291 inch)
E92Z-7B066-AB	7.6mm (0.299 inch)
E92Z-7B066-AC	7.8mm (0.307 inch)

FM5029300617000X

Low And Reverse Clutch Pressure Plate Thickness Chart

a. Measure clearance of snap ring and low and reverse brake retaining plate. Clearance should be **0.O83-0.O947 inch**. If clearance is not as specified, select a retaining plate which will bring clearance to specification.
b. Check operation by applying compressed air through fluid passage.

30. Install wave washer.
31. Hold one-way clutch in horizontal position and install clutch by turning carrier hub assembly counterclockwise.
32. Install one-way clutch snap ring.
33. Install servo assembly, piston stem, and anchor strut, then install 2-4 brake band so band fully expands in transaxle case. Interlock 2-4 band and anchor strut.
34. Install small sun gear and one-way clutch by rotating.

NOTE: Ensure thrust bearing and race are in correct position.

35. Install piston stem in position while pulling 2-4 brake band with suitable pliers, then tighten piston stem by hand.
36. Install clutch assembly by rotating.

NOTE: Ensure thrust bearing and race are in correct position.

37. Install turbine shaft snap ring, then remove turbine shaft holder.
38. Measure height difference between reverse, coasting and forward drum and transaxle case. Distance should be **0.0028-0.075 inch** on non-turbo models or **0.151 inch** on turbo models.
39. Install snap ring into bottom ring groove of turbine shaft.

40. Place thrust bearing needle onto clutch assembly.
41. Check total endplay as follows:
    a. Remove previous thrust washer and gasket.
    b. Place **0.087 inch** thrust washer on oil pump.
    c. Install oil pump onto clutch assembly, then use feeler gauge to measure clearance between transaxle case and oil pump.
    d. Measure several places, then calculate average gap.

Clearance mm (inch)	Select this Thrust Washer Thickness mm (inch)	Part Number
0.91–1.10 (0.036–0.043)	1.2 (0.047)	E92Z-7D014-E
0.71–0.90 (0.028–0.035)	1.4 (0.055)	E92Z-7D014-F
0.51–0.70 (0.020–0.027)	1.6 (0.063)	E92Z-7D014-A
0.31–0.50 (0.012–0.019)	1.8 (0.071)	E92Z-7D014-B
0.11–0.30 (0.004–0.011)	2.0 (0.078)	E92Z-7D014-C
0.00–0.10 (0.036–0.043)	2.2 (0.047)	E92Z-7D014-D

FM5028800354000X

Bearing Thrust Washer Thickness Chart

    e. If clearance is not as specified, select thrust washer which will bring clearance to specification.
    f. Remove oil pump, then place selected thrust washer and new gasket onto oil pump.
    g. Install oil pump onto clutch assembly. Torque oil pump bolts.
42. Adjust 2-4 brake band as follows:
    a. Loosen locknut, then tighten piston stem to **78-96 in lbs**.
    b. Loosen piston stem two turns, then tighten locknut.
    c. Torque brake band locknut.
43. Install oil strainer and new 0-rings to transaxle, then install oil pan with new gasket. Ensure oil pan magnets are properly positioned. Torque oil pan bolts.
44. Align manual valve with pin on manual plate, then install valve body with new gasket into transaxle case. Torque valve body mounting bolts.
45. Install electrical connector and new 0-ring into transaxle case.
46. Connect shift solenoid and transaxle oil temperature sensor connectors. Match shift solenoid connector coded colors.
47. Connect throttle cable to throttle cam on control valve body, then install new 0-ring on bracket.
48. Install control valve body cover with new gasket. Torque cover bolts.
49. Install oil pipes, hoses, and switch box as an assembly, then the transaxle vent hose and harness clip. Torque switch box bolts.
50. Install ball, spring, oil pipe, gasket, and plug. Torque outlet oil pipe connector plug to **23-35 ft lbs**.
51. Install solenoid connector, then the pulse generator and fluid temperature switch.
52. Turn manual shaft to N position, then install neutral safety or manual lever position switch and loosely tighten bolts.
53. Adjust neutral safety or manual lever position switch as follows:
    a. Remove screw, then move neutral safety or manual lever position switch so alignment hole is aligned with bolt hole.
    b. Inserting **0.079 inch diameter** pin through the hole, then install bolt. Torque bolts.
54. Install oil level gauge and dipstick tube with new 0-ring into transaxle case. Tighten dipstick tube mounting bolts to **71-88 in lbs**.
55. Using converter seal replacer tool No. T88C-77000-BH or equivalent, install new converter seal.
56. Install oil pump shaft, then the new 0-ring on oil pump shaft.
57. Fill torque converter with specified transaxle fluid.
58. Install torque converter into converter housing while rotating it to align with splines.

    CAUTION: Do not try to force torque converter in. Install it carefully.

59. Ensure torque converter is installed correctly by measuring distance A between end of converter and housing.
60. On 1993-1996 Probe models, distance should be **0.602 inch** for 2.0L engine and **0.551 inch** for engine.
61. On models except 1993-1996 Probe, distance should be **0.98 inch**.

Vehicle: Specifications

NOTE: For tests involving switches, the values will be: switch OFF (released) / switch ON (depressed).

Inputs	SIG Pin #	REF. Pin #	KOEO	Units	Hot Idle	30 MPH	55 MPH	Units
CCPS$$	1R	PWRGND	12/0	DCV	14/0	14/0	14/0	DCV
BLMT$	1P	PWRGND	12	DCV	14	14	14	DCV
BOO	1F	PWRGND	0/12##	DCV	0/14##	0	0	DCV
CID	2B	PWRGND	N/A	RPM	185	315	510	RPM
CKP1	2A	PWRGND	N/A	RPM	715	1175	2090	RPM
DEF***	1O	PWRGND	12/0-1	DCV	14/1	14/1	14/1	DCV
DRL	1K	PWRGND	12/0-1	DCV	14/1	14/1	14/1	DCV
ECT	2E	SIGRTN	2.5#	DCV	0.49	0.58	0.57	DCV
ECTF	2K	SIGRTN	4.5#	DCV	0.78	1.11	1.14	DCV
HDLP***	1J	PWRGND	0/12	DCV	0/14	0/14	0/14	DCV
HO2S	2C	PWRGND	0-1	DCV	0.1	0.65	0.3	DCV
IAT	2F	SIGRTN	2.5#	DCV	1.89	2.78	3.04	DCV
IDL	1T	PWRGND	0/12	DCV	0	13	13	DCV
MAF	2L	PWRGND	1-1.5	DCV	1.0	1.5	2.0	DCV
MLP*	1V	PWRGND	0	DCV	0	13	13	DCV
MLP1**	2N	PWRGND	0	DCV	0	0	0	DCV
MLP2**	2O	PWRGND	0	DCV	0	0	0	DCV
MLPD**	2P	PWRGND	0	DCV	0	13	13	DCV
MLPR**	2M	PWRGND	0	DCV	0	0	0	DCV
ODS	1H	PWRGND	12/0	DCV	13/0	13/0	13/0	DCV
PSG+	3F	PSG-	N/A	RPM	10790	18000	19730	RPM
PSP	1N	PWRGND	12	DCV	13.5	13.5	13.5	DCV
STI	1L	PWRGND	12	DCV	13.5	13.5	13.5	DCV
TOT	2H	SIGRTN	3.5	DCV	1.01	1.45	1.06	DCV
TP	2D	SIGRTN	0.5/4	DCV	0.49	0.59	1.0	DCV
VSS	1M	PWRGND	N/A	MPH	0	17	30	MPH
VST	1D	PWRGND	0	DCV	0	0	0	DCV

Outputs	SIG Pin #	REF. Pin #	KOEO	Units	Hot Idle	30 MPH	55 MPH	Units
ACR$$***	1S	PWRGND	12/1	DCV	13.5/1	13.5/1	13.5/1	DCV
CANP	3N	PWRGND	12	DCV	13.5	2.3	1.45	DCV
DSS	3T	SIGRTN	0	DCV	0	0	0.02	DCV
EVR***	3K	PWRGND	12	DCV	1.08	1.12	1.15	DCV
FPR	3L	PWRGND	12	DCV	0.5	0.5	0.5	DCV
FPRC	3M	PWRGND	12	DCV	13.5	13.5	13.5	DCV

Diagnostic Reference Values (Part 1)

Outputs	SIG Pin #	REF. Pin #	KOEO	Units	Hot Idle	30 MPH	55 MPH	Units
HFAN	3I	PWRGND	12	DCV	13.6	13.6	13.6	DCV
IAC	3O	PWRGND	12	DCV	9.65	8.37	7	DCV
ICM	1I	PWRGND	N/A	RPM	715	1175	2090	RPM
INJ1	3W	PWRGND	N/A	mSEC	3.7	6.5	7.6	mSEC
INJ2	3X	PWRGND	N/A	mSEC	3.7	6.5	7.6	mSEC
INJ3	3Y	PWRGND	N/A	mSEC	3.7	6.5	7.6	mSEC
INJ4	3Z	PWRGND	N/A	mSEC	3.7	6.5	7.6	mSEC
LFAN	3G	PWRGND	12	DCV	13.5	13.5	13.5	DCV
LPS	3V	SIGRTN	N/A	DCV	9	8.37	7.5	DCV
MIL	1E	PWRGND	0	DCV	13.6	13.6	13.6	DCV
ODL	1Q	PWRGND	12/2	DCV	13/2	13/2	13/2	DCV
SML	1C	PWRGND	0-1	DCV	1-13@	1-13@	1-13@	DCV
SS1	3P	SIGRTN	0	DCV	0	12	12	DCV
SS2	3Q	SIGRTN	0	DCV	0	0	0	DCV
SS3	3R	SIGRTN	12	DCV	12	12	12	DCV
STO	1G	PWRGND	0-1	DCV	12	12	12	DCV
TCC	3U	SIGRTN	0	DCV	0	5.75	0	DCV
TCCC	3S	SIGRTN	0	DCV	0	13	13	DCV

NOTE: Reference values shown may vary approximately ±20% depending on operating conditions and other factors.

$$ Switch is ON with A/C ON.

$ 0 volts in position 3 or more.

At 20°C (68°F).

* 0 volts in P or N position; 12 volts in R, D, 1, or 2.

** In gear, 12 volts.

@ Value switches between 1 volt and 13 volts.

12 volts with brake pedal depressed, 0 volts with brake pedal released.

*** Use manual DC volts when making measurements.

Diagnostic Reference Values (Part 2)

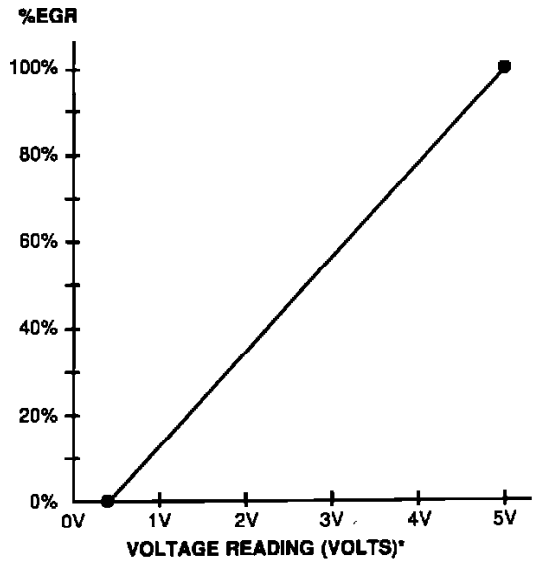

%EGR	Voltage*
0	0.4–0.8
10	0.7–1.1
20	1.1–1.5
30	1.4–1.8
40	1.8–2.2
50	2.1–2.5
60	2.5–2.9
70	2.8–3.2
80	3.2–3.6
90	3.5–3.9
100	3.9–4.3

EVP SENSOR DATA * Voltage values calculated for VREF = 5.0V (These values may vary ± 15% due to sensor and VREF variations.)

EGR Position Sensor Graph

ECT Sensor Graph

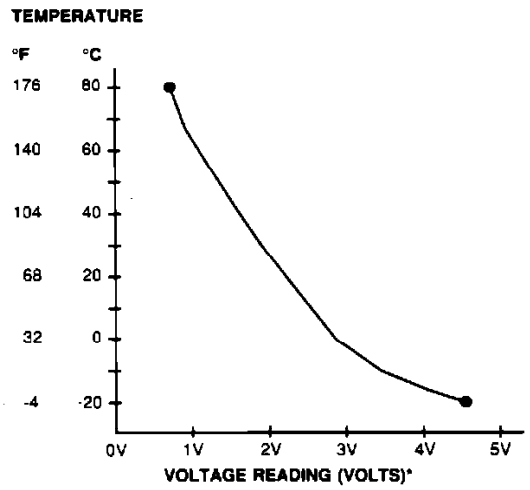

TEMPERATURE °F	°C	VOLTAGE* VOLTS	RESISTANCE K OHMS
-4	-20	4.70	10-20
32	0	3.40	4-7
68	20	2.50	2-3
104	40	2.00	0.9-1.3
140	60	1.20	0.4-0.7
176	80	0.70	0.2-0.4

ECT SENSOR DATA * Voltage values calculated for VREF = 5.0V (These values may vary ± 15% due to sensor and VREF variations).

Engine Coolant Temperature (ECT) Sensor Data Chart

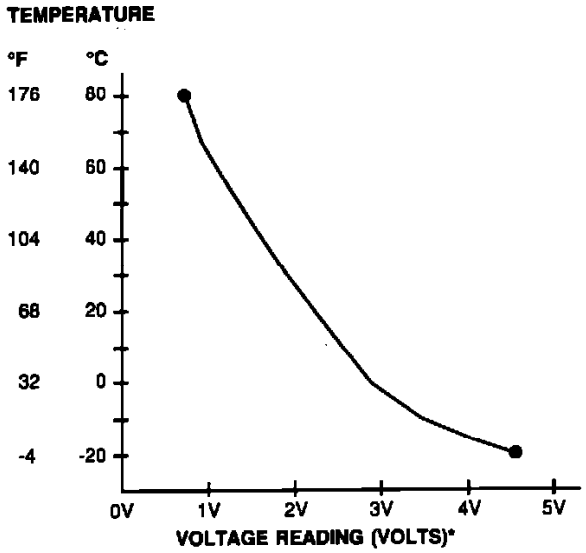

Temperature °F	°C	Voltage* Volts
-4	-20	4.7
32	0	3.4
68	20	2.5
104	40	2.0
140	60	1.2
176	80	0.7

IAT SENSOR DATA * Voltage values calculated for VREF = 5.0V (These values may vary ± 15% due to sensor and VREF variations).

Intake Air Temperature Sensor Graph

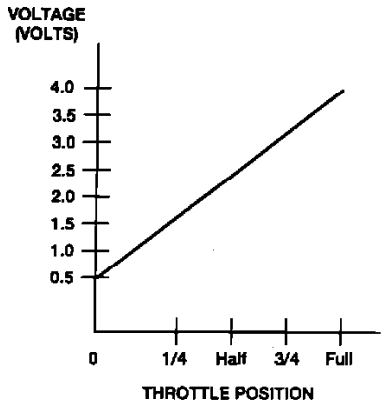

Throttle Position	Voltage (Volts)
0	0.5
1/4	1.3
Half	2.2
3/4	2.9
Full	3.7

NOTE: Voltage Values May Vary ± 15%.

A16834-B

Throttle Position Sensor Graph

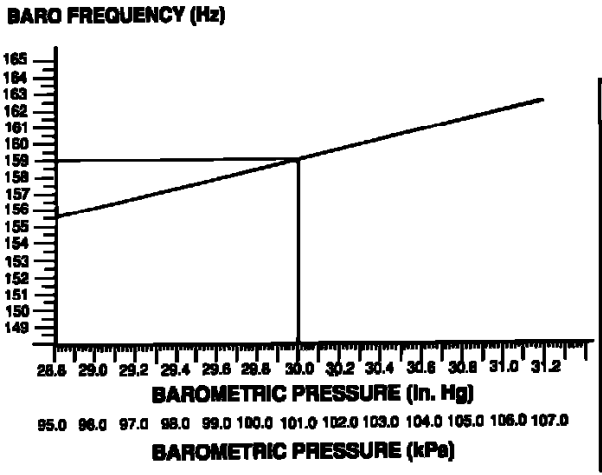

BARO SENSOR DATA: OUTPUT FREQUENCY AT KOEO

Frequency may vary plus or minus 6 Hz of these values due to sensor variations.

BAROMETRIC PRESSURE		FREQUENCY
In. (Hg)	kPa	Hz*
17.1	58	122.4
18.3	62	125.5
19.5	66	128.7
20.7	70	131.9
21.8	74	135.1
23.0	78	138.3
24.2	82	141.8
25.4	86	145.5
26.6	90	148.9
27.7	94	152.5
28.9	98	156.1
30.1	102	159.8
31.0	105	162.4

Barometric Sensor Graph

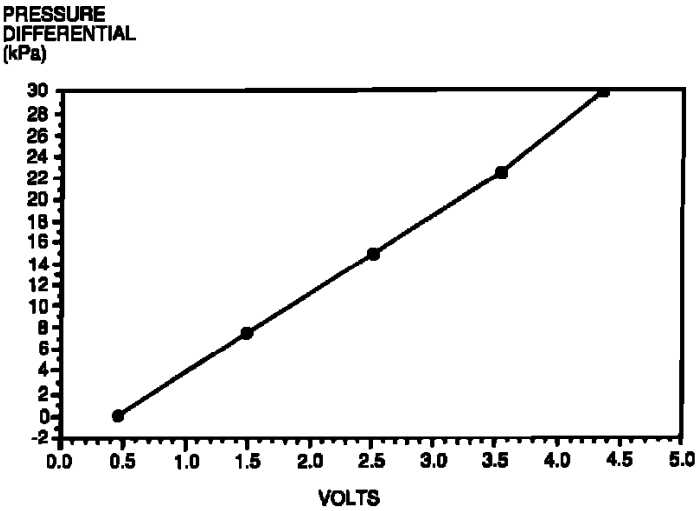

DPFE SENSOR DATA
VOLTAGE VALUES CALCULATED FOR VREF = 5.0 VOLTS
(THESE VALUES MAY VARY +/- 15% DUE TO SENSOR AND VREF VARIATIONS)

PRESSURE			VOLTAGE*
PSI	In-Hg	kPa	Volts
4.34	8.83	29.81	4.56
3.25	6.62	22.36	3.54
2.17	4.41	14.90	2.51
1.08	2.21	7.46	1.48
0	0	0	0.45

Delta DPFE Sensor Graph

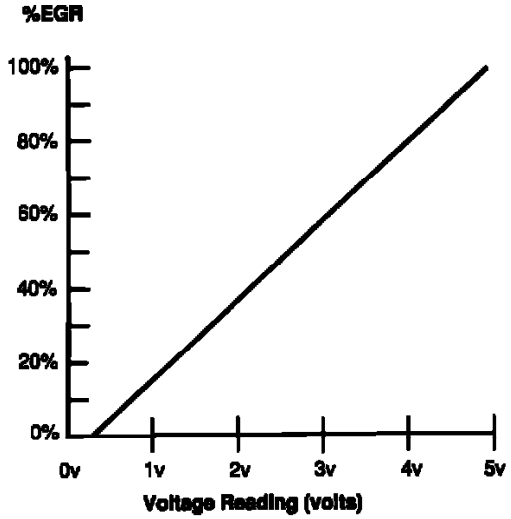

EVP SENSOR DATA* Voltage values calculated for VREF = 5.0v (These values may vary ± 15% due to sensor and VREF variations).

%EGR	VOLTAGE*
0	0.40
10	0.75
20	1.10
30	1.45
40	1.80
50	2.15
60	1.50
70	2.85
80	3.20
90	3.55
100	3.90

EGR Valve Position Sensor Graph

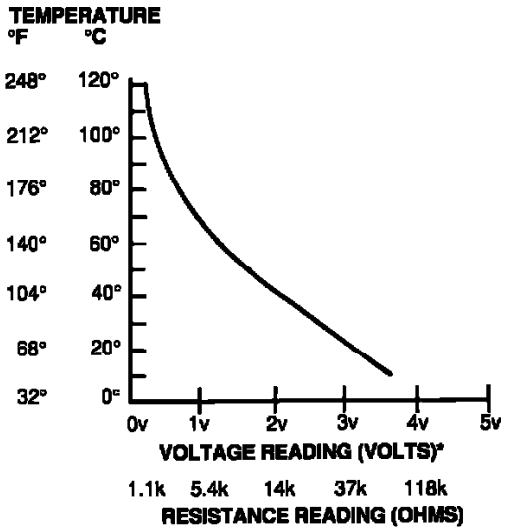

ECT SENSOR DATA* Voltage values calculated for VREF = 5.0v (These values may vary ± 15% due to sensor and VREF variations)

TEMPERATURE °F	°C	VOLTAGE* Volts	RESISTANCE K ohms
248	120	0.28	1.18
230	110	0.36	1.55
212	100	.47	2.07
194	90	.61	2.80
176	80	.80	3.84
158	70	1.04	5.37
140	60	1.35	7.60
122	50	1.72	10.97
104	40	2.16	16.15
86	30	2.62	24.27
68	20	3.06	37.30
50	10	3.52	58.75

Engine Coolant Temperature Sensor Graph

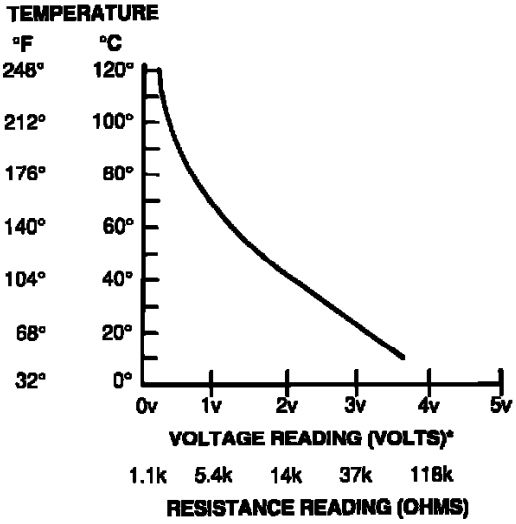

IAT SENSOR DATA * Voltage values calculated for VREF = 5.0v (These values may vary ± 15% due to sensor and VREF variations)

TEMPERATURE °F	°C	VOLTAGE* Volts	RESISTANCE K ohms
248	120	0.28	1.18
230	110	0.36	1.55
212	100	.47	2.07
194	90	.61	2.80
176	80	.80	3.84
158	70	1.04	5.37
140	60	1.35	7.60
122	50	1.72	10.97
104	40	2.16	16.15
86	30	2.62	24.27
68	20	3.06	37.30
50	10	3.52	58.75

Intake Air Temperature Sensor Graph

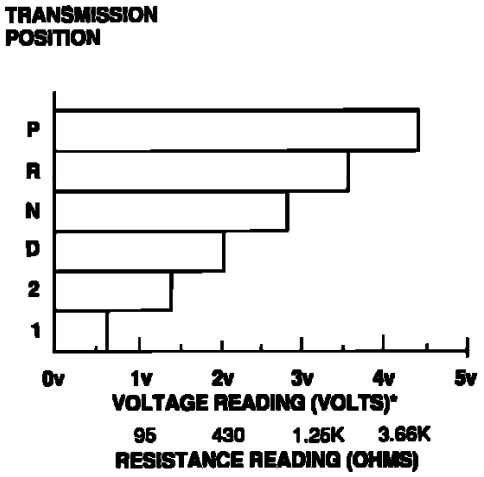

MLP SENSOR DATA* Voltage values calculated for VREF = 5.0v (These values may vary ± 15% due to sensor and VREF variations)

Transmission Shift Position	Voltage* Volts	Resistance Ohms
P	4.41	4.16K
R	3.60	1.44K
N	2.83	733
D	2.09	401
2	1.37	211
1	.68	81

Sensor Graph

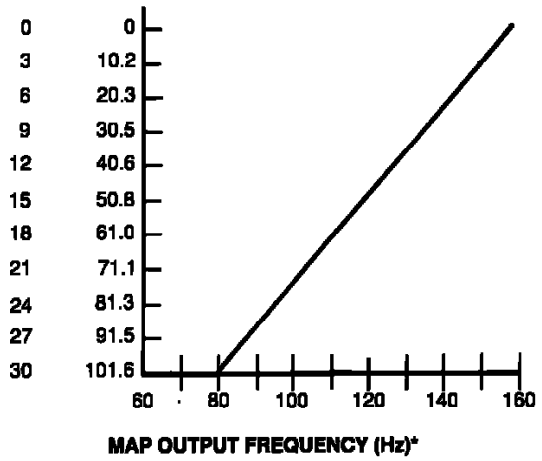

* MAP output frequency versus manifold vacuum data is based on 30.0 in. (Hg) Barometric Pressure.

MANIFOLD VACUUM		FREQUENCY
In. (Hg)	kPa	Hz*
0	0	159
3	10.2	150
6	20.3	141
9	30.5	133
12	40.6	125
15	50.8	117
18	61.0	109
21	71.1	102
24	81.3	95
27	91.5	88
30	101.6	80

Manifold Absolute Pressure Sensor Graph

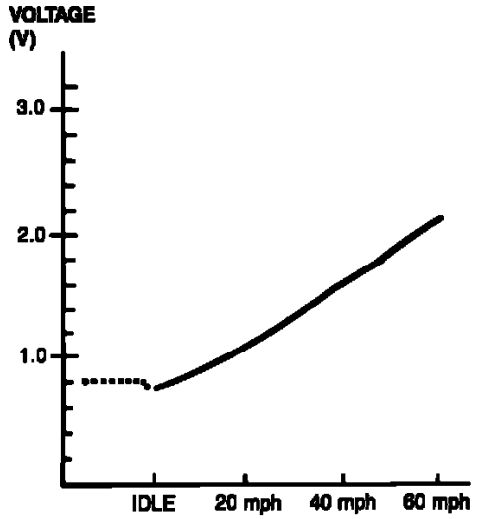

MAF SENSOR DATA* Engine at Normal Operating Temperature.

ENGINE CONDITION	VOLTAGE VOLTS*
IDLE	.8
20 MPH	1.0
40 MPH	1.7
60 MPH	2.1

Mass Air Flow Sensor Graph

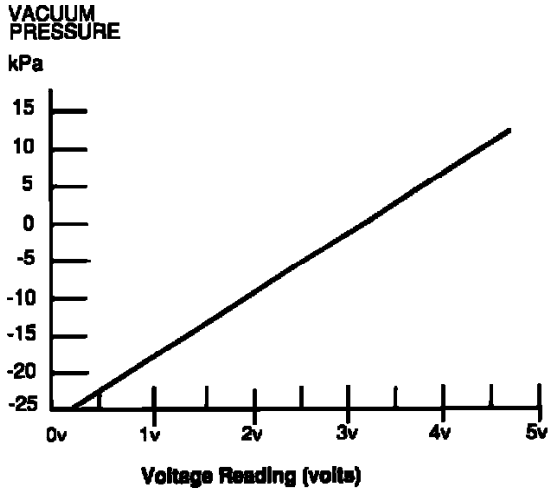

PFE SENSOR DATA* Voltage values calculated for VREF = 5.0v (These values may vary ± 15% due to sensor and VREF variations)

PRESSURE VACUUM			
PSI	In. Hg	kPa	VOLTAGE*
1.82	—	12.5	4.75
1.36	—	9.42	4.38
0.91	—	6.25	4.0
0.46	—	3.17	3.63
0	0	0	3.25
—	5	-17	1.22
—	7.4	-25	0.25

CAUTION: To avoid possible sensor damage do not exceed pressure/vacuum range shown when testing.

PFE Sensor Graph

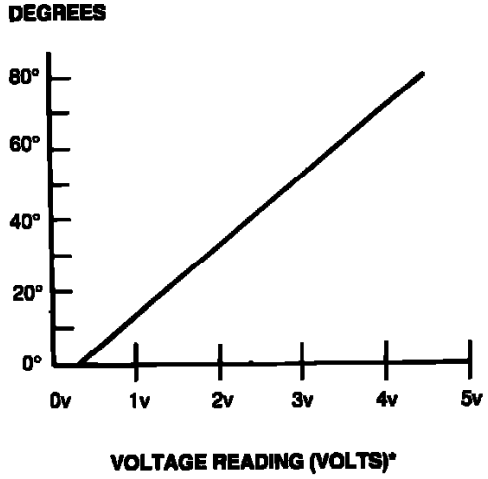

TP SENSOR DATA* Voltage values calculated for VREF = 5.0v (These values may vary ± 15% due to sensor and VREF variations)

THROTTLE ANGLE DEGREES	VOLTAGE* VOLTS
0	0.50
10	0.97
20	1.44
30	1.90
40	2.37
50	2.84
60	3.31
70	3.78
80	4.24

Throttle Position Sensor Graph

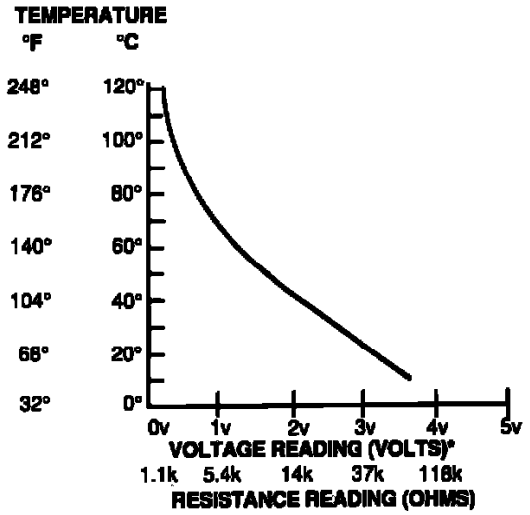

TOT SENSOR DATA* Voltage values calculated for VREF = 5.0v (These values may vary ± 15% due to sensor and VREF variations)

TEMPERATURE °F	°C	VOLTAGE* Volts	RESISTANCE K ohms
248	120	0.28	1.18
230	110	0.36	1.55
212	100	.47	2.07
194	90	.61	2.80
176	80	.80	3.84
158	70	1.04	5.37
140	60	1.35	7.60
122	50	1.72	10.97
104	40	2.16	16.15
86	30	2.62	24.27
68	20	3.06	37.30
50	10	3.52	58.75

Transmission Oil Temperature Sensor Graph

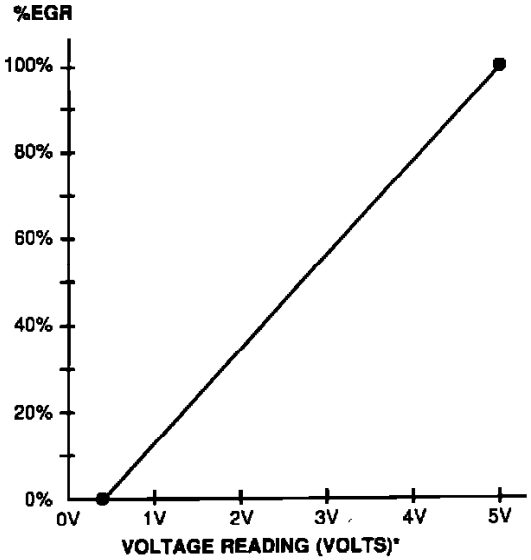

%EGR	Voltage*
0	0.4–0.8
10	0.7–1.1
20	1.1–1.5
30	1.4–1.8
40	1.8–2.2
50	2.1–2.5
60	2.5–2.9
70	2.8–3.2
80	3.2–3.6
90	3.5–3.9
100	3.9–4.3

EVP SENSOR DATA * Voltage values calculated for VREF = 5.0V (These values may vary ± 15% due to sensor and VREF variations.)

EGR Position Sensor Graph

ECT Sensor Graph

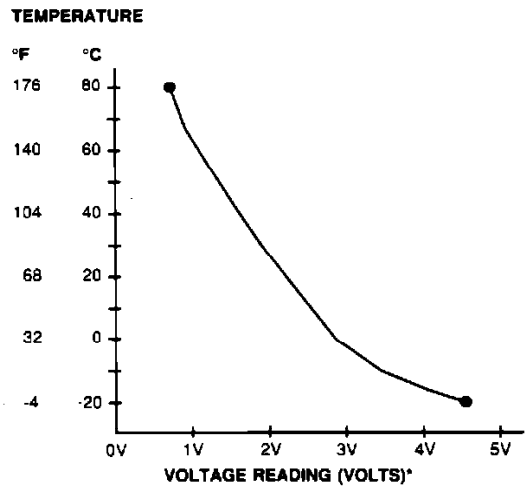

TEMPERATURE °F	°C	VOLTAGE* VOLTS	RESISTANCE K OHMS
-4	-20	4.70	10-20
32	0	3.40	4-7
68	20	2.50	2-3
104	40	2.00	0.9-1.3
140	60	1.20	0.4-0.7
176	80	0.70	0.2-0.4

ECT SENSOR DATA * Voltage values calculated for VREF = 5.0V (These values may vary ± 15% due to sensor and VREF variations).

Engine Coolant Temperature (ECT) Sensor Data Chart

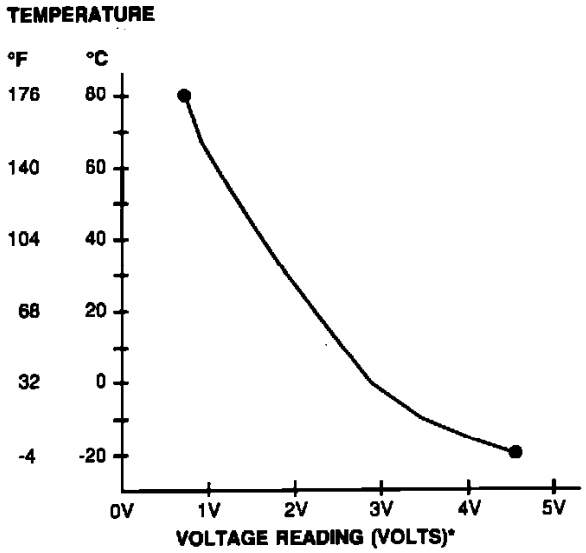

Temperature °F	°C	Voltage* Volts
-4	-20	4.7
32	0	3.4
68	20	2.5
104	40	2.0
140	60	1.2
176	80	0.7

IAT SENSOR DATA * Voltage values calculated for VREF = 5.0V (These values may vary ± 15% due to sensor and VREF variations).

Intake Air Temperature Sensor Graph

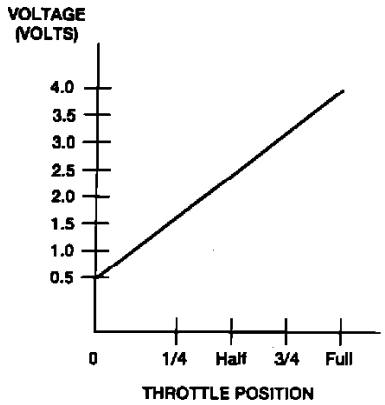

Throttle Position	Voltage (Volts)
0	0.5
1/4	1.3
Half	2.2
3/4	2.9
Full	3.7

NOTE: Voltage Values May Vary ± 15%.

A16834-B

Throttle Position Sensor Graph

SENSORS/ INPUTS	Signal Pin #	KOEO	KOEO Units	HOT IDLE	30 MPH	55 MPH	KOER Units
DEF - red	15	VBAT	DCV	0 (2)	VBAT	VBAT	DCV
TP	47	.5	DCV	.5	.5-.7	.6-.9	DCV
MAF	50	0	DCV	.6-.7	1.3-1.6	1.7-2.4	DCV
ECT	7	.7	DCV	.6	.7	.7	DCV
IAT	25	2.3	DCV	2.4	2.8	3.0	DCV
HDL	45	0 (6)	DCV	VBAT (5) (6)	0 (6)	0 (6)	DCV
IDM	4	1-15	RPM	690-740	1570-1670	2280-2440	RPM
PIP	56	0-15	RPM	690-740	1570-1670	2280-2440	RPM
ACD	23	9.8	DCV	.7 (1)	11.1	11.1	DCV
HO2S	44	0	DCV	switching (7)	switching (7)	switching (7)	DCV
BLR - red	14	9.8-11.7	DCV	0 (4)	11.1	11.1	DCV
VSS+	3	1	MPH	1	30	55	MPH
CID	24	.5	DCV	.5	.5	.5	DCV
EGRT	43	2.9	DCV	2.9	1.8 - 3.5	.1	DCV
CPP	30	.1	DCV	.1	VBAT	VBAT	DCV
FPM - red	8	0 (6)	DCV	VBAT (6)	VBAT (6)	VBAT (6)	DCV
PSP	28	11.1	DCV	.1 (3)	12.6	12.6	DCV
STI	48	5.0	DCV	5.0	5.0	5.0	DCV
ACTUATORS/ OUTPUTS							
INJ 3	39	VBAT (6)	DCV	3.4-3.7	4.5-5.5	5.7-6.7	mS
INJ 4	35	VBAT (6)	DCV	3.4-3.7	4.5-5.5	5.7-6.7	mS
INJ 2	59	VBAT (6)	DCV	3.4-3.7	4.5-5.5	5.7-6.7	mS
INJ 1	58	VBAT (6)	DCV	3.4-3.7	4.5-5.5	5.7-6.7	mS
HFC	33	VBAT (6)	DCV	VBAT (6)	VBAT (6)	VBAT (6)	DCV
STO/MIL	17	.1	DCV	VBAT	VBAT	VBAT	DCV
EVR	31	VBAT (6)	DCV	VBAT (6)	.3 (6)	.3 (6)	DCV
ACON	54	VBAT	DCV	.2 (1)	VBAT	VBAT	DCV
IAC	21	VBAT	DCV	9.6.-9.7	6.4-9.1	5.5-6.2	DCV
FPRC	13	.2	DCV	VBAT	VBAT	VBAT	DCV
FP	22	VBAT	DCV	.1-.2	.1-.2	.1-.2	DCV
SPOUT	36	15	RPM	690-740	1570-1670	2280-2440	RPM
LFC	32	VBAT (6)	DCV	VBAT (6)	VBAT (6)	VBAT (6)	DCV
CANP	11	VBAT	DCV	VBAT	8.5-VBAT	.3-9.5	DCV
OTHER							
IGN TIMING	TIMING	N/A	DEG	10-22	26-30	28-32	DEG

Diagnostic Reference Values

Engine	Actuator	PCM Pin	Reference	Resistance (ohms)
1.3L	BANK1	2U	VPWR	9.0
1.8L MTX	BANK2	2V	VPWR	9.0
	CANP	2X	VPWR	30
	VICS	2S (1.8L MTX)	VPWR	50
	IAC	2W	VPWR	16
	FPRC	2T (1.8L MTX)	VPWR	50
1.6L	BANK1	3E	VPWR	14
	BANK2	3C	VPWR	14
	CANP	2P	VPWR	20
	IAC	2Q	VPWR	20
	FPRC	2K	VPWR	20
1.8L 4EAT	BANK1	3U	VPWR	9.0
	BANK2	3V	VPWR	9.0
	CANP	2O	VPWR	30
	VICS	3I	VPWR	50
	IAC	3Q	VPWR	16
	FPRC	3M	VPWR	50
2.0L 4EAT	CANP	3N	VPWR	30-36
	EVR	3K	VPWR	33-45
	FPRC	3M	VPWR	33-45
	IAC	3O	VPWR	7.7-12
	INJ1	3W	VPWR	12-17
	INJ2	3X	VPWR	12-17
	INJ3	3Y	VPWR	12-17
	INJ4	3Z	VPWR	12-17
2.5L	CANP	2O	VPWR	30-34
	EGRC	3P	VPWR	30-34
	EGRV	3O	VPWR	30-34
	FPRC	3M	VPWR	30-34
	VRIS1	3I	VPWR	33-39
	VRIS2	3J	VPWR	33-39
	IAC	3Q	VPWR	10.7-12.3
	INJ1	3U	VPWR	12-16
	INJ2	3V	VPWR	12-16
	INJ3	3W	VPWR	12-16
	INJ4	3X	VPWR	12-16
	INJ5	3Y	VPWR	12-16
	INJ6	3Z	VPWR	12-16

NOTE: All tests made with monitor in manual ohms, key OFF, and PCM disconnected.

Static Resistance Values

NOTE: **MAF signal voltage vs. engine RPM while engine is at normal operating temperature. These values are typical for automatics, but may vary based on vehicle load and temperature.**

MAF Sensor Graph

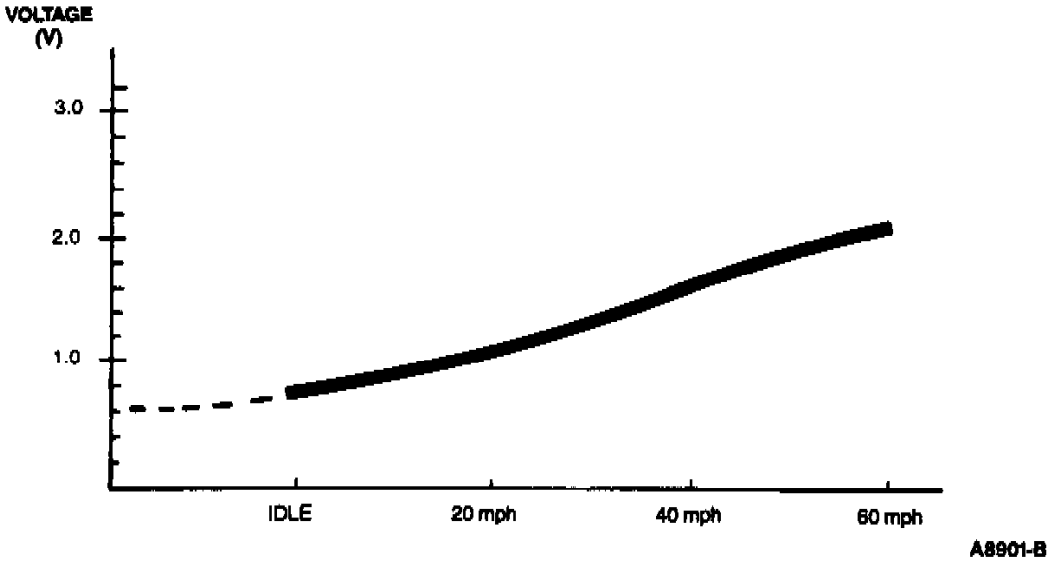

MAF Sensor Data

Engine Condition	MAF Signal Voltage
IDLE	.60
20 mph	1.10
40 mph	1.70
60 mph	2.10

Mass Air Flow Meter Signal Voltage Sensor Data

ECT Sensor Graph

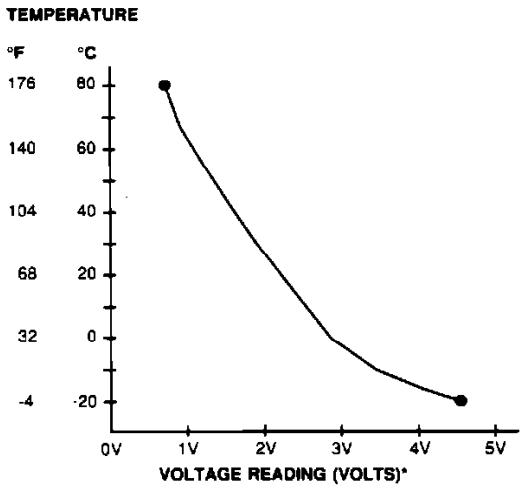

TEMPERATURE °F	°C	VOLTAGE* VOLTS	RESISTANCE K OHMS
-4	-20	4.70	10-20
32	0	3.40	4-7
68	20	2.50	2-3
104	40	2.00	0.9-1.3
140	60	1.20	0.4-0.7
176	80	0.70	0.2-0.4

ECT SENSOR DATA * Voltage values calculated for VREF = 5.0V (These values may vary ± 15% due to sensor and VREF variations).

Engine Coolant Temperature (ECT) Sensor Data Chart

Manual Transmission

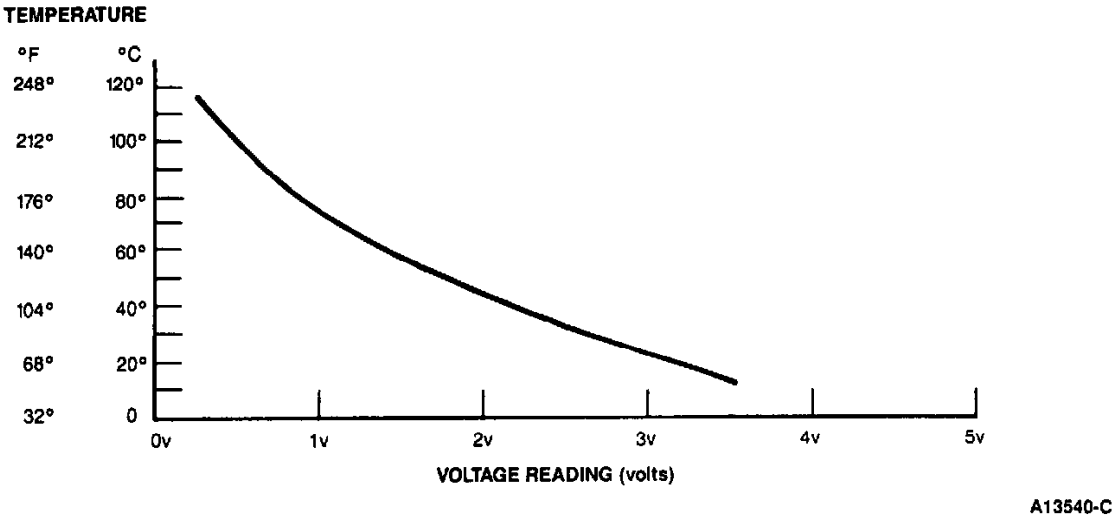

Temperature		Engine Coolant/Intake Air Temperature Sensor Values	
°F	°C	Voltage (volts)	Resistance (K ohms)
248	120	.27	1.18
230	110	.35	1.55
212	100	.46	2.07
194	90	.60	2.80
176	80	.78	3.84
158	70	1.02	5.37
140	60	1.33	7.70
122	50	1.70	10.97
104	40	2.13	16.15
86	30	2.60	24.27
68	20	3.07	37.30
50	10	3.51	58.75

Engine Coolant/Intake Air Temperature Sensor Values

Notes: Engine coolant temperature must be greater than 10°C (50°F) to pass the KOEO Self-Test and greater than 82°C (180°F) to pass the KOER Self-Test. To accomplish this, the engine should be at normal operating temperature.

Ambient temperature should be above 10°C (50°F) to receive acceptable input from the Intake Air Temperature **(IAT)** sensor.

Voltage values were calculated for VREF=5.0 volts. These values may vary 16 percent due to sensor and VREF variations.

Manual Transmission

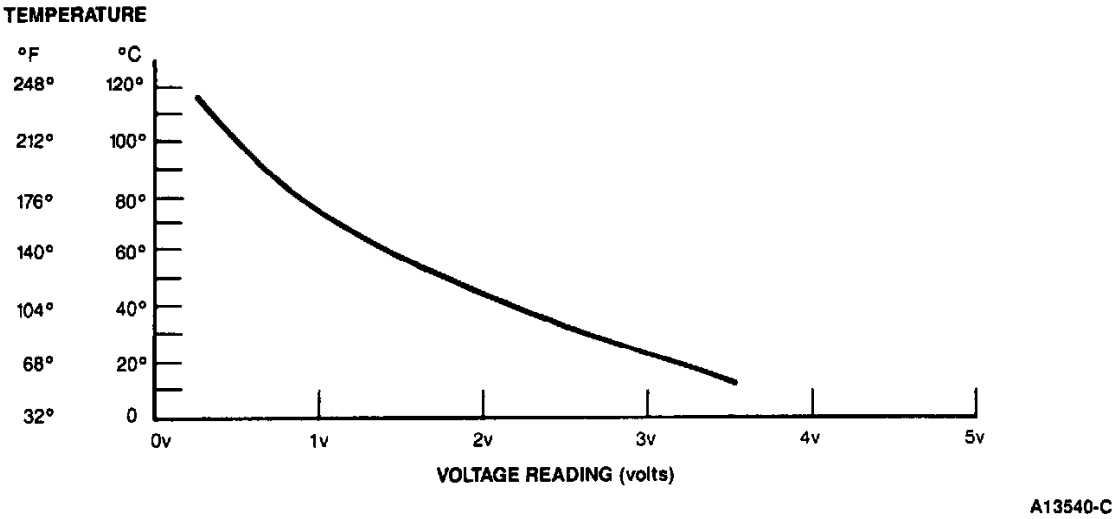

Temperature		Engine Coolant/Intake Air Temperature Sensor Values	
°F	°C	Voltage (volts)	Resistance (K ohms)
248	120	.27	1.18
230	110	.35	1.55
212	100	.46	2.07
194	90	.60	2.80
176	80	.78	3.84
158	70	1.02	5.37
140	60	1.33	7.70
122	50	1.70	10.97
104	40	2.13	16.15
86	30	2.60	24.27
68	20	3.07	37.30
50	10	3.51	58.75

Engine Coolant/Intake Air Temperature Sensor Values

Notes: Engine coolant temperature must be greater than 10°C (50°F) to pass the KOEO Self-Test and greater than 82°C (180°F) to pass the KOER Self-Test. To accomplish this, the engine should be at normal operating temperature.

Ambient temperature should be above 10°C (50°F) to receive acceptable input from the Intake Air Temperature **(IAT)** sensor.

Voltage values were calculated for VREF=5.0 volts. These values may vary 16 percent due to sensor and VREF variations.

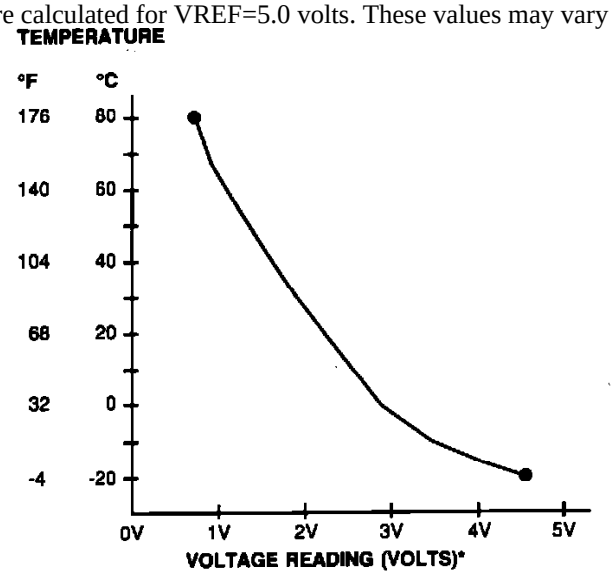

Temperature °F	°C	Voltage* Volts
-4	-20	4.7
32	0	3.4
68	20	2.5
104	40	2.0
140	60	1.2
176	80	0.7

IAT SENSOR DATA * Voltage values calculated for VREF = 5.0V (These values may vary ± 15% due to sensor and VREF variations).

Intake Air Temperature Sensor Graph

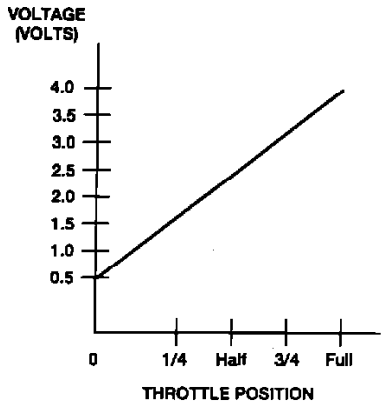

Throttle Position	Voltage (Volts)
0	0.5
1/4	1.3
Half	2.2
3/4	2.9
Full	3.7

NOTE: Voltage Values May Vary ± 15%.

A16834-B

Throttle Position Sensor Graph

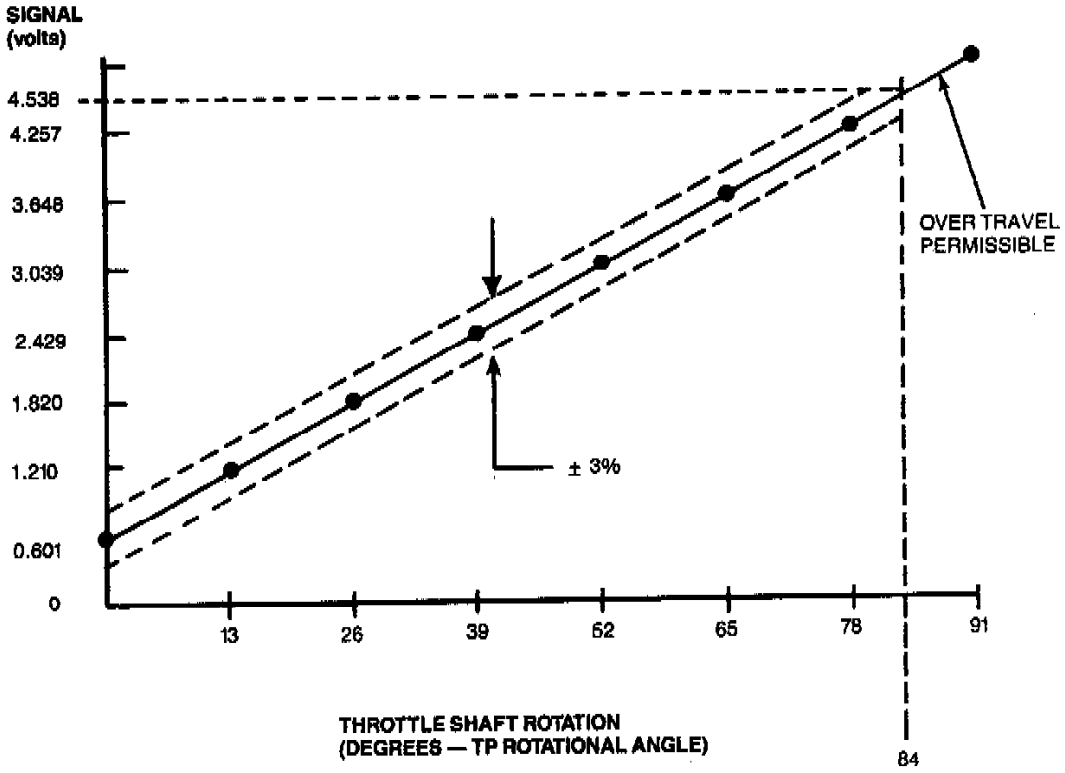

Throttle Angle Measurement

Vehicle Speed Sensor

Sensor resistance ..... 190-250 ohms

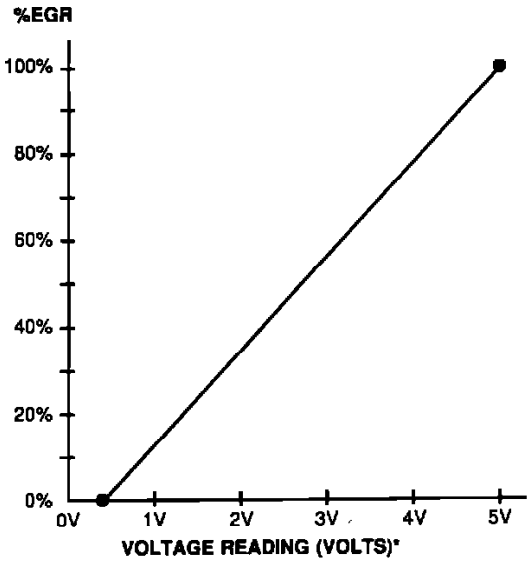

%EGR	Voltage*
0	0.4–0.8
10	0.7–1.1
20	1.1–1.5
30	1.4–1.8
40	1.8–2.2
50	2.1–2.5
60	2.5–2.9
70	2.8–3.2
80	3.2–3.6
90	3.5–3.9
100	3.9–4.3

EVP SENSOR DATA * Voltage values calculated for VREF = 5.0V (These values may vary ± 15% due to sensor and VREF variations.)

EGR Position Sensor Graph

Firing Order

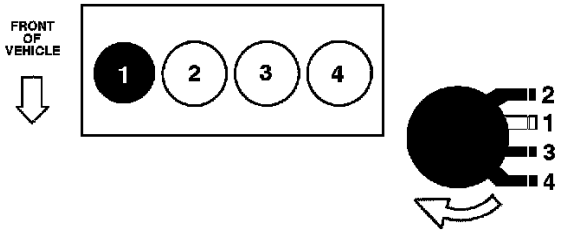

4-Cyl Firing Order: 1 3 4 2

Fuel Injector

Fuel Injector Resistance ..... 12-16 Ohms

Ignition Cable

Spark Plug Wire Resistance ..... 4000-7000 Ohms per foot

Automatic Transaxle

RESISTANCE

Primary ..... 0.58-0.86 Ohms

Secondary ..... 1.15K-18.5K Ohms

Manual Transaxle

RESISTANCE

Primary ..... Less Than 5.0 Ohms
Secondary ..... More Than 10.0K Ohms

Position	Resistance (ohms)
N or P	Less than 5
R, D, 2, or 1	Greater than 10,000

Accelerator Pedal

Accelerator Shaft Retainer Bolts ..... 8-10 Nm (71-88 lb in)

Air Bag Module Bolts	7-9 Nm

Air Flow Meter/Sensor

MASS AIR FLOW TORQUE SPECIFICATIONS

Sensor retaining bolts ..... 8-10 Nm (71-88 in lb)

Air cleaner tube clamps ..... 1.4-2.5 Nm (15-22 in lb)

Alignment

	Caster Angle, Degrees		Camber Angle, Degrees				
			Limits		Desired		
Year	Limits	Desired	Left	Right	Left	Right	Toe-In, Inch
1991-92	+1 3/20 to +2 13/20	+1 9/10	−29/60 to +1 1/60	−29/60 to +1 1/60	+4/15	+4/15	.12
1993-94	+2.56 to +3.46	3.01	①	①	②	②	0.0 to 0.34③

①—2.0L engine, +.03 to -1.05; 2.5L engine, -.09 to -1.39.
②—2.0L engine, -.42; 2.5L engine, -.54.
③—Degrees.

Front Wheel Alignment Specifications

Front Wheel Alignment

	Camber Angle, Degrees				
	Limits		Desired		
Year	Left	Right	Left	Right	Toe-In, Inch
1991-92	−1 11/60 to +19/60	−1 11/60 to +19/60	−13/60	−13/60	.12
1993-94	-.65 to +.25①	-.65 to +.25①	-0.20	-0.20	0.0 to +0.34②

①—Not adjustable.
②—Degrees.

Rear Wheel Alignment Specifications

Rear Wheel Alignment

A/T Torque Data

Description	N•m	Lb-Ft	Lb-In
Transmission Oil Pan Bolts	7.8-11	—	69-95
Pulse Signal Generator (PSG) Bolt	7.8-11	—	69-95
Valve Body Bolts	7.8-11	—	69-95
Shift Solenoid Bolts	7.8-11	—	69-95
TCC Solenoid Bolt	7.8-11	—	69-95
Rear Engine Support-to-Transaxle Support Insulator Nuts	37-52	27-38	—
Rear Engine Support-to-Vehicle Chassis Bolts	64-89	47-66	—
Front Wheel Spindle Connecting Rod or End Nuts	42-57	31-42	—
Front Suspension Lower Arm Ball Joint Nuts and Bolts	43-59	32-44	—
Transaxle Case To Converter Bolts	37-52	27-38	—
Throttle Control Lever Pin Bolt	7.8-11	—	69-95
Transaxle-To-Engine Bolts	55-80	41-59	—
Flywheel to Converter Retaining Nuts	34-49	25-36	—
Lower Transaxle-To-Engine Oil Pan Bolts	37-52	27-38	—
LH Engine Support Insulator Nuts	67-93	49-69	—
Shift Lever Locknut	44-64	33-47	—
Throttle Valve Control Actuating Cable Bracket-To-Transaxle Bolts	7.8-11	—	69-95
Bearing Housing Bolts	19-26	14-19	—

4EAT 4-spd A/T, Transaxle Torque

4EAT (Cont'd)

Description	N•m	Lb-Ft	Lb-In
Plug	31-47	23-35	—
Oil Pump Cover Bolts	7.8-11	—	69-95
Valve Body Oil Pipe Bolts	7.8-11	—	69-95
Filter Bolts	7.8-11	—	69-95
Idler Gear Shaft Nut	128-177	94-130	—
Square Head Oil Passage Plug	5-10	—	43-87
Throttle Valve Control Adjust Bracket Bolts	7-10	—	62-87
Vehicle Speed Sensor (VSS) Bolt	7.8-12	—	69-104
Transmission Range (TR) Switch Bolts	7.8-11	—	69-95
Oil Bypass Tube Bolts	7.8-11	—	69-95

EXTERNAL CONTROLS, 4EAT

Description	N•m	Lb-In
Shift Cable and Bracket Bolts	8-11	69-95
Locknut A	10-15	89-133
Gearshift Lever Nuts	10-15	89-133

4EAT 4-spd A/T, Transaxle Cont.

Description	Nm	Lb-Ft	Lb-In
Oil Pan Screen Bolts	8-10	—	71-88
Transmission Oil Pan Bolts	8-10	—	71-88
Case Plug	40-50	30-36	—
Main Control Valve Body Bolts	11-14	—	97-130
Main Control Cover Bolts	8-10	—	71-88
Front Fender Splash Shield Screws	8-10	—	71-88
N-R Accumulator Plate Bolts	6.5-7.8	—	58-69
Transmission Fluid Temperature (TFT) Sensor	8-10	—	71-88
Transmission Control Module (TCM) Bolts	19-25	14-18	—
Pulse Signal Generator (PSG) Bolt	8-10	—	71-88
LH Engine Support Insulator Nuts and Bolt	67-93	50-68	—
LH Engine Support Insulator Through Bolt	86-116	63-86	—
Fuel Filter Bracket Bolts	8-10	—	71-88
Transmission Range (TR) Switch Bolts	8-10	—	71-88
Manual Control Shift Outer Lever Nut	32-46	24-33	—
1-2 Accumulator Plate Bolts	6.5-7.8	—	58-69
Jet Orifice Nuts	1.7-2.2	—	15-19
Valve Body Bolts	6.5-7.8	—	58-69
Solenoid Bolt	6.5-7.8	—	58-69
Oil Pipe Bolts	6.5-7.8	—	58-69
Oil Baffle Bolts	6.5-7.8	—	58-69

2.5L 4EAT 4-spd A/T, Transaxle Torque

Description	Nm	Lb-Ft	Lb-In
Torque Converter Stator Support Bolts	10.8-13.7	—	96-121
2-3 Accumulator Bolts	8-10	—	71-88
Park Actuator Support Bolts	11-13	—	96-121
Manual Control Lever Nut	42-54	31-40	—
Main Control Bracket Bolt	8-10	—	71-88
Oil Pressure Relief Plug	12-17	—	106-150
Oil Pump Bolts	19-25	14-18	—
Servo Rod Nut	25-39	19-28	—
Oil Cooler Line Bolt	12-17	—	105-156
Engine-to-Transaxle Bolts	68-99	50-73	—
Rear Transaxle Support Bracket Bolts	67-93	50-68	—
Flywheel to Converter Retaining Nuts	44-60	32-45	—
Oil Filler Tube Bolts	8-10	—	71-88
Rear Engine Support Nuts (A)[2]	75-104	55-77	—
Rear Engine Support Bolts and Nuts (B)[2]	67-93	50-68	—
Rear Engine Support Nuts (C)[2]	44-60	32-44	—
Crossmember Bolts	94-131	68-96	—
Transaxle-to-Engine Bolts	68-99	50-73	—
Tie Rod End Nut	29-44	22-33	—
Lower Transaxle Support Insulator Bolt	55-80	41-59	—

2.5L 4EAT 4-spd A/T, Transaxle Cont.

A/T Technical Data

4EAT

GEARSHIFT LEVER POSITION	GEAR	2/4 BAND 7D034	REVERSE CLUTCH	LOW/ REVERSE CLUTCH	3-4 CLUTCH	COASTING CLUTCH	FORWARD CLUTCH	ONE-WAY (SPRAG) CLUTCH 7A089		ONE-WAY (ROLLER) CLUTCH 7A089	
								DRIVE	COAST	DRIVE	COAST
R	REVERSE		D	H							
Ⓓ	FIRST						D	D	OR	H	OR
Ⓓ	SECOND	H					D	D	OR		
Ⓓ	THIRD				D	A[1]	D	D	OR		
Ⓓ	FOURTH	H			D		A[2]	OR	OR		
D	THIRD				D	A[1]	D	D	OR		
L[3]	SECOND	H				A[1]	D	D	OR		
L	FIRST			H[1]		A[1]	D	D	OR	H	OR
PLANETARY MEMBER		REAR (LARGE) SUN GEAR AND DRUM 7A626	REAR (LARGE) SUN GEAR AND DRUM 7A626	FRONT PLANET 7A398	FRONT PLANET 7A398	PRIMARY (SMALL) SUN GEAR 7A399	ONE-WAY (SPRAG) CLUTCH 7A089	PRIMARY (SMALL) SUN GEAR 7A399		FRONT PLANET 7A398	

OR = OVERRUNNING
D = DRIVING
H = HELD
A = APPLIED
1 FOR ENGINE BRAKING ONLY
2 APPLIED BUT DOES NOT TRANSFER POWER
3 FOR OVERSPEED PROTECTION ONLY (DURING MANUAL DOWNSHIFT)

4EAT 4-spd A/T, Clutch And Band Application

Item	Type F 4EAT	
	1.9L Engine	1.8L Engine
Torque Converter Stall Torque Ratio	2.100:1	
Gear Ratio		
1st	2.800	
2nd	1.540	
3rd	1.000	
OD	0.700	
Reverse	2.333	
Final Drive Gear	4.060 (California, all models) 4.060 (US and Canada, wagon only) 3.550 (US and Canada, except wagon)	3.736
Number of Drive/Driven Plates		
Forward Clutch	3/3	
Coasting Clutch	2/2	
3-4 Clutch	4/4	
Reverse Clutch	2/2	
Low/Reverse Clutch	4/4	
Servo Diameter (Piston outer dia./retainer inner dia.) mm (in)	70/40 (2.76/1.57)	70/36 (2.76/1.42)

4EAT 4-spd A/T, (1.8L/1.9L) Ratios/Band Appl.

SHIFT SOLENOID VALVE CHART (1.8L) 4EAT

RANGE	GEAR		SOLENOID VALVES 1-2	2-3	3-4	LOCKUP
P	—		OFF	OFF	ON	OFF
R	Reverse		ON	OFF	OFF	OFF
N	—	Below approx. 4 km/h (2.5 mph)	OFF	OFF	ON	OFF
		Above approx. 5 km/h (3.1 mph)	ON	OFF	OFF	OFF
Ⓓ	1st		OFF	ON	OFF	OFF
	2nd		ON	ON	ON	OFF
	3rd	Below approx. 32 km/h (20 mph) at operating temperature	OFF	OFF	OFF	OFF
		Above approx. 32 km/h (20 mph) or cold engine	ON	OFF	OFF	OFF
	O/D	Lockup OFF	ON	OFF	ON	OFF
		Lockup ON	ON	OFF	ON	ON
D	1st		OFF	ON	OFF	OFF
	2nd		ON	ON	ON	OFF
	3rd	Below approx. 32 km/h (20 mph) at operating temperature	OFF	OFF	OFF	OFF
		Above approx. 32 km/h (20 mph) or cold engine	ON	OFF	OFF	OFF
L	1st		OFF	ON	OFF	OFF
	2nd	Below approx. 110 km/h (68 mph)	ON	ON	OFF	OFF
		Above approx. 110 km/h (68 mph)	ON	OFF	OFF	OFF

1.8L 4EAT 4-spd A/T, Shift Solenoid Chart

SHIFT SOLENOID VALVE CHART (1.9L) 4EAT

RANGE	GEAR		SOLENOID VALVES 1-2	2-3	3-4	LOCKUP
P	—		OFF	OFF	ON	OFF
R	Reverse		OFF	OFF	ON	OFF
N	—		OFF	OFF	ON	OFF
Ⓓ	1st		OFF	ON	ON	OFF
	2nd		ON	ON	ON	OFF
	3rd	Below approx. 26 km/h (16 mph) at operating temperature	OFF	OFF	OFF	OFF
		Above approx. 26 km/h (16 mph) or cold engine	ON	OFF	OFF	OFF
		Lockup OFF	ON	OFF	OFF	OFF
		Lockup ON	ON	OFF	OFF	ON
	O/D	Lockup OFF	ON	OFF	ON	OFF
		Lockup ON	ON	OFF	ON	ON
D	1st		OFF	ON	ON	OFF
	2nd		ON	ON	ON	OFF
	3rd	Below approx. 26 km/h (16 mph) at operating temperature	OFF	OFF	OFF	OFF
		Above approx. 26 km/h (16 mph) or cold engine	ON	OFF	OFF	OFF
L	1st		OFF	ON	OFF	OFF
	2nd*	Below approx. 110 km/h (68 mph)	ON	ON	OFF	OFF
		Above approx. 110 km/h (68 mph)	ON	OFF	OFF	OFF

* Overspeed protection only.

1.9L 4EAT 4-spd A/T, Shift Solenoid Chart

BAND AND CLUTCH APPLICATION CHART

Range	Mode	Gear		Engine Braking Effect	Operating Elements: Forward Clutch	Coasting Clutch	3 – 4 Clutch	Reverse Clutch	Low and Intermediate Band: Applied	Released	Low and Reverse Clutch	One-Way Sprag Clutch	One-Way Roller Clutch
P	—	—		—									
R	—	Reverse	Below approx. 30 km/h (19 mph)	Yes				●			●		
			Above approx. 30 km/h (19 mph)	No				●					
N	—	—		—									
D	POWER[1] or NORMAL	1st		No	●							●	●
		2nd		No	●				●			●	
		3rd		Yes	●	●	●		●[2]	●		●	
		O/D		Yes	●		●		●			●[3]	
2	POWER	2nd		Yes	●	●			●			●	
		3rd*		Yes	●	●	●		●[2]	●		●	
		O/D*		Yes	●		●		●			●[3]	
1	POWER	1st		Yes	●	●					●	●	●
		2nd*		Yes	●	●			●			●	

[1] The Transmission Control Module (TCM) automatically switches between POWER and NORMAL modes corresponding to range and the speed the accelerator pedal is depressed.

● Operating element.

[2] Operating, but not contributing to the POWER transaxle.

[3] POWER is not transmitted.

* Overspeed protection only. The transaxle will not upshift into these gears.

CD10893-F

2.5L 4EAT 4-spd A/T, Band And Clutch Application (Probe)

4EAT

Transaxle control	Floor shift
Lock mechanism	Equipped
Torque converter stall torque ratio	2.05
Gear ratio	
First	2.800
Second	1.540
Third	1.000
Fourth	0.700
Reverse	2.333
Final	4.157
Automatic Transmission Fluid (ATF)	See TSB 06-14-4
Type	**MERCON®** V
Capacity - liters (quarts)	6.8 (7.2)
2-4 Servo (piston outer dia/retainer inner dia)	78.0/40.0mm (3.07/1.57 inches)
Number of planetary gear teeth	
Rear sun gear and drum	36
Primary sun gear	30
Long pinion gear	24
Short pinion gear	22
Ring gear	84
Number of output gear teeth	17
Number of idler gear teeth	37
Number of ring gear teeth	71
Engine stall speed	
D, 2, 1 and R ranges	2,270-2,500 rpm

2.5L 4EAT 4-spd A/T, Gear Ratios

4EAT

Number of Clutch Plates	
Low/Reverse Clutch	
External Spline Clutch Plates (Metal)	4
Internal Spline Clutch Plates (Friction)	4
Forward Clutch	
External Spline Clutch Plates (Metal)	3
Internal Spline Clutch Plates (Friction)	3
Coasting Clutch	
External Spline Clutch Plates (Metal)	3
Internal Spline Clutch Plates (Friction)	2
Reverse Clutch	
External Spline Clutch Plates (Metal)	2
Internal Spline Clutch Plates (Friction)	2
3-4 Clutch	
External Spline Clutch Plates (Metal)	4
Internal Spline Clutch Plates (Friction)	4

2.5L 4EAT 4-spd A/T, Number Of Clutch Plates

SHIFT SOLENOID VALVE CHART

Range	Mode	Gear		Solenoid Valves			
				1 – 2 Shift	2 – 3 Shift	3 – 4 Shift	Lockup Control
P	—	—		OFF	OFF	ON	OFF
R	—	Reverse	Below approx. 2.5 mph (4 km/h)	OFF	ON	ON	OFF
			Above approx. 2.5 mph (4 km/h)	OFF	OFF	OFF	OFF
N	—	—	Below approx. 2.5 mph (4 km/h)	OFF	OFF	ON	OFF
			Above approx. 3 mph (5 km/h)	ON	OFF	OFF	OFF
D	POWER or NORMAL	1st		OFF	ON	ON	OFF
		2nd		ON	ON	ON	●
		3rd		ON	OFF	OFF	●
		O/D		ON	OFF	ON	●
2	POWER[2]	2nd		ON	ON	OFF	OFF
		3rd*		ON	OFF	OFF	●
		O/D*		ON	OFF	ON	OFF
1	POWER[2]	1st		OFF	ON	OFF	OFF
		2nd*		ON	ON	OFF	OFF

● Available for lockup but may not necessarily be activated.

[1] The Transmission Control Module (TCM) automatically switches between POWER and NORMAL depending on the speed of the accelerator pedal depression.

[2] Cannot be selected.

* Overspeed protection only. Transaxle will not upshift into these gears.

CD10894-F

2.5L 4EAT 4-spd A/T, Shift Solenoid Chart

Shift Speeds

D RANGE SHIFT POINT CHART

Range	Mode	Throttle Condition (Throttle Sensor Voltage)	Shifting Gears	Drum Speed rpm	Vehicle Speed km/h (mph)
D	POWER[1]	Fully open (3.0–4.4 volts)	1 → 2	6100–6700	60–66 (37–41)
			2 → 3	5850–6300	105–113 (65–70)
			3 → O/D	6150–6550	169–179 (105–111)
		Half throttle (1.6–2.2 volts)	1 → 2	4250–5200	40–49 (25–30)
			2 → 3	4050–5100	69–87 (43–54)
			3 → O/D	4300–5300	114–139 (71–86)
		Fully closed (0.1–1.1 volts)	O/D → 3	450–600	17–23 (10–14)
			3 → 1	400–650	11–17 (7–11)
		Kickdown	O/D → 3	3600–3850	135–145 (84–90)
			3 → 2	3250–3550	86–94 (53–58)
			2 → 1	2600–2950	44–50 (27–31)
	NORMAL[1]	Fully open (3.0–4.4 volts)	1 → 2	6100–6700	60–66 (37–41)
			2 → 3	5850–6300	105–113 (65–70)
			3 → O/D	6150–6500	169–179 (105–111)
			Lockup ON	4300–4550	169–179 (105–111)
		Half throttle (1.6–2.2 volts)	1 → 2	3500–4350	33–41 (20–25)
			2 → 3	3150–4050	54–69 (33–43)
			3 → O/D	3500–4550	92–120 (57–74)
			Lockup ON	3300–4000	124–149 (77–92)
		Fully closed (0.1–1.1 volts)	O/D → 3	450–600	17–13 (10–14)
			3 → 1	400–650	11–17 (7–11)
		Kickdown	O/D → 3	3600–3850	135–145 (84–90)
			3 → 2	3250–3550	86–94 (53–58)
			2 → 1	2600–2950	44–50 (27–31)

[1] The Transmission Control Module (TCM) determines the mode of operation according to the speed that the accelerator pedal is depressed.

CD1089S-E

2.5L 4EAT 4-spd A/T, D Range Shift Point

Converter Cover	69-95 in.lb
Torque Converter	32-45 ft.lb

Transmission Position Switch/Sensor, A/T

Torque ..... **8-10 Nm (71-88 lb in)**

Valve Body Cover Bolts	69-95 in.lb
Valve Body Mounting Bolts	95-130 in.lb

Axle Shaft

Axle Nut ..... 174-235 ft lb
Ball Joint Pinch Bolt ..... 32-42 ft lb
Bearing Support Bracket ..... 31-46 ft lb
Dynamic Damper ..... 31-46 ft lb
Tie Rod End Nut ..... 23-33 ft lb
Wheel Lug Nut ..... 65-87 ft lb

Caliper Bolts	33-36 ft.lb

Anchor Plate Bolt	33-49 ft.lb
Brake Hose To Caliper (Banjo) Bolt	16-22 ft.lb
Disc Shield Bolt	37-50 ft.lb

Rear Hub Nut	130-174 ft.lb

Minimum Refinish Thickness For reference only. Always use specification found on rotor.	0.860 in
Thickness Variation (Parallelism)	0.0010 in
Lateral Runout (T.I.R.)	0.004 in

Minimum Refinish Thickness For reference only. Always use specification found on rotor.	0.315 in

Clockspring Screws	2-3 Nm

Clutch, M/T

Back-up Lamp Switch ..... 15-21 ft lb
Clutch Master Cylinder Nuts ..... 14-18 ft lb
Clutch Pedal Adjusting Locknut ..... 10.2-13.0 ft lb
Converter Inlet Pipe To Exhaust Manifold ..... 30-41 ft lb
Extension Bar Nut ..... 28-38 ft lb
Halfshaft Nuts ..... 174-235 ft lb [03]
Halfshaft Support Bearing Bolts ..... 32-45 ft lb
Intake Manifold Bracket Bolts ..... 27-38 ft lb
Lefthand Transaxle Mount Nuts ..... 32-44 ft lb
Lefthand Transaxle Mount Through Bolt ..... 63-86 ft lb
Lower Engine To Transaxle Mounting Bolts ..... 28-38 ft lb
Oil Level Plug ..... 29-43 ft lb
Neutral Position Switch ..... 15-21 ft lb
Pinch Bolt (Lower Ball Joint) ..... 26-41 ft lb
Pressure Line Flare Fitting ..... 10-15 ft lb
Pressure Plate ..... 13-18 ft lb
Rear Transaxle Mount To Transaxle Bolts ..... 50-68 ft lb
Shift Rod Bolt ..... 8-10 ft lb
Slave Cylinder ..... 12-16 ft lb
Splash Shield Bolts ..... 6-8 ft lb
Starter Motor Bolts ..... 28-38 ft lb
Transaxle Cradle Nuts & Bolts ..... 50-77 ft lb
Transaxle Shift Linkage Nut ..... 14-18 ft lb
Transverse Member Bolts ..... 69-96 ft lb
Upper Engine To Transaxle Mounting Bolts ..... 66-86 ft lb
Wheel Lug Nuts ..... 65-87 ft lb

[03] -- Nut must be staked after tightening.

Coolant Temperature Sensor/Switch (For Computer)

TORQUE SPECIFICATION

Engine coolant temperature sensor ..... 16-24 Nm (12-18 ft lbs)

Upper Instrument Panel Bolts	8-11 Nm
Lower Instrument Panel Bolts	19-25 Nm
Side Instrument Panel Bolts	8-11 Nm

System Specifications

Backing Plate Bolts ..... 31-47 ft lb
Drum To Hub Screws ..... 89-123 in lb
Hub Retainer Nut ..... 130-174 ft lb
Wheel Cylinder Bolts ..... 89-115 in lb
Wheel Lug Nuts ..... 65-87 ft lb

Backing Plate

Backing Plate Bolts ..... 31-47 ft lb

Drum Inside Diameter	9.0 in
Maximum Bore Limit	9.060 in
Maximum Runout	0.005 in

System Specifications

TORQUE VALUES

Inlet Pipe-To-Converter Nuts ..... 47 - 66 ft lb (64 - 89 Nm)
Manifold-To-Converter Inlet Nuts ..... 27 - 38 ft lb (37 - 52 Nm)
Converter-To-Middle Pipe Nuts ..... 47 - 66 ft lb (64 - 89 Nm)
Exhaust Shield Nuts ..... 71 - 88 in lb (8 - 10 Nm)
Exhaust Clamp Nuts ..... 26 - 34 ft lb (34 - 47 Nm)
Oxygen Sensor ..... 22 - 36 ft lb (30 - 49 Nm)

System Specifications

TORQUE VALUES

Inlet Pipe-To-Converter Nuts ..... 47 - 66 ft lb (64 - 89 Nm)
Manifold-To-Converter Inlet Nuts ..... 27 - 38 ft lb (37 - 52 Nm)
Converter-To-Middle Pipe Nuts ..... 47 - 66 ft lb (64 - 89 Nm)
Exhaust Shield Nuts ..... 71 - 88 in lb (8 - 10 Nm)
Exhaust Clamp Nuts ..... 26 - 34 ft lb (34 - 47 Nm)
Oxygen Sensor ..... 22 - 36 ft lb (30 - 49 Nm)

Catalyst Shield

TORQUE VALUES

Inlet Pipe-To-Converter Nuts ..... 47 - 66 ft lb (64 - 89 Nm)
Manifold-To-Converter Inlet Nuts ..... 27 - 38 ft lb (37 - 52 Nm)
Converter-To-Middle Pipe Nuts ..... 47 - 66 ft lb (64 - 89 Nm)
Exhaust Shield Nuts ..... 71 - 88 in lb (8 - 10 Nm)
Exhaust Clamp Nuts ..... 26 - 34 ft lb (34 - 47 Nm)
Oxygen Sensor ..... 22 - 36 ft lb (30 - 49 Nm)

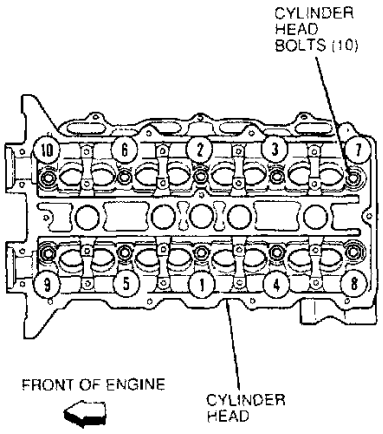

Fig. 11, Cylinder Head Bolt Tightening Sequence

SERVICE SPECIFICATIONS

GENERAL SPECIFICATIONS

Displacement	2.0L
Number of Cylinders	4
Firing Order	1-3-4-2
Bore and Stroke	83.0 x 92.0 mm (3.27 x 3.62 in)
Engine Rotation	c ockwise
Distributor Rotation	c ockwise
Cylinder Head and Valve Train	
Compression Ratio	9.0:1
Valve Guide Bore Diameter	6.01-6.03mm (0.2366-0 2374 in)
Valve Seats	
Width — Intake and Exhaust	0.9-1.3mm (0.035-0.051 in)
Angle	45
Valve Stem-to-Guide Clearance-Intake	0.025-0.060mm (0.0010-0 0024 in)
Valve Stem-to-Guide Clearance-Exhaust	0.030-0.065
Valve Stem Diameter-Intake	5.970-5.985 mm (0.2350-0.2356 in)
Valve Stem Diameter-Exhaust	5.965-5.980 mm (0.2348-0.2354 in)
Valve Springs-Free Length	
Intake	44.0mm (1.732 in)
Minimum	36.5mm (1.437 in)
Maximum Out Of Square Limit	1.54mm (0.061 in)
Valve Clearance	0.0mm (0.0 in)

CAMSHAFT SPECIFICATIONS

Lobe Height	
Intake	42.973mm (1.6918 in)
Exhaust	43.338mm (1.7062 in)
Wear Limit	
Intake	42.823mm (1.6859 in)
Exhaust	43.188mm (1.7003 in)
End Play Service Limit	0.08-0.20mm (0.0031-0.0079 in)
Service Limit	0.21mm (0.008 in)
Journal-To-Bearing Clearance	
Journals 1-5	0.035-0.081mm (0.0014-0.0032 in)
Maximum	0.15mm (0.006 in)
Runout Limit	0.03mm (0.00012 in)
Journal Diameter	
Journals 1-5	25.940-25.965mm (1.0213-1.0222 in)
Out-of-Round Limit	0.003mm (0.0012 in)

CYLINDER BLOCK SPECIFICATIONS

Head Gasket Surface Flatness	0.05mm (0.002 in)
Cylinder Bore	
Diameter — Standard	83.000-83.019mm (3.2677-3.2685 in)
Diameter — 0.25mm (0.010 in) Oversize	83.250-83.269mm (3.2776-3.2783 in)
Diameter — 0.50mm (0.020 in) Oversize	83.500-83.519mm (3.2874-3.2881 in)
Out-of-Round Limit	0.010mm (0.0004 in)
Taper Limit	0.010mm (0.0004 in)

SERVICE SPECIFICATIONS — CONT'D

CRANKSHAFT, FLYWHEEL AND CONNECTING ROD SPECIFICATIONS

Main Journal Diameter-Standard	55.937-55.955mm (2.2022-2.2029 in)
Minimum	55.932mm (2.2020 in)
Main Journal Diameter-0.25mm (0.010 in) Undersize	55.687-55.705mm (2.1924-2.1931 in)
Minimum	55.682mm (2.1922 in)
Out-of-Round Limit	0.003mm (0.0001 in)
Taper Limit	0.006mm (0.0002 in)
Runout	0.03mm (0.0012 in)
Connecting Rod Journal	
Diameter-Standard	47.940-47.955mm (1.8874-1.8880 in)
Minimum	47.935mm (1.8872 in)
Diameter 0.25mm (0.010 in) Undersize	47.690-47.705mm (1.8776-1.8781 in)
Minimum	47.685mm (1.8774 in)
Diameter 0.50mm (0.020 in) Undersize	47.440-47.455mm (1.8677-1.8683 in)
Minimum	47.435mm (1.8675 in)
Taper Limit	0.006mm (0.0002 in)
Out-of-Round Limit	0.003mm (0.0001 in)
Main Journal Oil Clearance	
No. 1,2,4,5	0.024-0.050mm (0.0009-0.0020 in)
No. 3	00.030-0.056mm (0.0012-0.0022 in)
Maximum	0.067mm (0.0026 in)
Crankshaft End Play	0.080-0.282mm (0.0031-0.011 in)
Maximum	0.030mm (0.0118 in)
Connecting Rod	
Piston Pin Bore Diameter	18.943-18.961mm (0.7458-0.7465 in)
Rod Journal Clearance	0.013-0.037mm (0.0005-0.0015 in)
Alignment (Bore-to-Bore)	
Bend/50mm (1.97 in)	0.05mm (0.02 in)
Side Clearance Maximum	0.110-0.262mm (0.0043-0.0103 in)
Maximum	0.30 mm (0.012 in)

PISTONS AND RINGS SPECIFICATIONS

Piston Diameter Standard	82.954-82.974mm (3.2659-3.2667 in)
Piston Diameter 0.25mm (0.010 in) Oversize	83.204-83.224mm (3.2757-3.2765 in)
Piston Diameter 0.50mm (0.020 in) Oversize	83.454-83.474mm (3.2856-3.2864 in)
Piston-to-Bore Clearance	
Piston-to-Bore Clearance	0.039-0.052mm (0.0015-0.0020 in)
Maximum	0.15 mm (0.006 in)
Piston Pin Bore Diameter	18.988-19.0mm (0.7476-0.7480 in)
Piston Pin Diameter	18.974-18.980mm (0.7470-0.7472 in)
Piston Ring Land Clearance	
Top and Second Ring	0.035-0.065mm (0.0014-0.0026 in)
Limit	0.085mm (0.0033 in)
Ring Gap	
Top and Second Ring	0.15-0.30mm (0.006-0.012 in)
Maximum	0.5mm (0.020 in)
Oil Rail	0.20-0.70mm (0.008-0.028 in)
Maximum	0.9mm (0.035 in)

Oil Drain Plug	30-41 Nm
Timing Belt Tensioner Bolt	37-52 Nm
Timing Belt Cover Bolts	8-10 Nm

1993 Ford Probe L4-121 2.0L DOHC VIN A MFI

Crankshaft Pulley Bolt	157-167 Nm
Splash Shield Bolts	8-10 Nm
Engine Mount Through Bolt	86-116 Nm
Engine Mount Attaching Nuts	74-103 Nm
Generator Upper Mounting Bolt	19-25 Nm
Generator Lower Through Bolt	37-52 Nm
P/S pump Through Bolt	43-61 Nm
P/S Pump Lock Bolt	31-46 Nm
P/S Pump Belt Shield Bolts	7-9 Nm
P/S Hose Bracket Hold Down Bolts	8-10 Nm
Water Pump Bolts	19-25 Nm
Water Pump Pulley Bolts	8-10 Nm
Converter Inlet to Exhaust Manifold Nuts	37-52 Nm
Stiffener Mounting Bolts	19-25 Nm
Rear Main Seal to Stiffener Nuts	8-10 Nm
Oil Pickup Tube Mounting Bolts	8-10 Nm
Oil Pump Attaching Bolts	19-25 Nm
A/C Compressor Bracket Mounting Bolts	37-52 Nm
A/C Compressor Mounting Bolts	24-35 Nm
Cylinder Head Bolts	Tighten in two steps: 1. First tighten to 18-22 Nm (13-16 lbs ft) 2. Apply a paint mark to the cylinder head bolts for reference and turn the bolts 90+/-5 in sequence. Then turn an additional 90+/-5 in the same sequence.
Cylinder Head Cover Bolts	8-10 Nm Tighten in two steps in sequence to 8-10 Nm (52-69 lb in).
Generator Bracket Nut and Bolt	19-25 Nm
Coolant Temp Sensor Mounting Bolts	19-25 Nm
Camshaft Sprocket Bolts	49-61 Nm
Camshaft Bearing Cap Bolts	Tighten in sequence in three steps to 12-14 Nm (100-126 lbs in).
Exhaust Manifold Mounting Bolts	16-23 Nm
Exhaust Manifold Mounting Nuts	20-28 Nm
Heated Oxygen Sensor	30-49 Nm
EGR Pipe to Exhaust Manifold	32-47 Nm
Exhaust Manifold Heat Shield Bolts	8-10 Nm
Oil Filter	6 Nm Tighten 1-1/6 turns after the gasket touches mounting surface.

Oil Pressor Sensor	12-17 Nm
Intake Manifold Support Bracket Bolts	37-52 Nm
Flywheel Bolts	96-103 Nm
Flex Plate Bolts	96-103 Nm
Rear Main Seal Housing to Block Bolts	8-10 Nm
Engine to Transaxle Mounting Bolts	68-99 Nm
Starter Bolts	31-46 Nm
Halfshaft Support Bearing Bolts	43-61 Nm
Wheel Lug Nuts	89-117 Nm
Fuel Filter Bracket Bolts	8-11 Nm
Crankshaft Rear Cover Plate Bolt	8-10 Nm
Idler Bolt	37-52 Nm
Engine Mount Bracket Bolts	43-61 Nm
Timing Belt Tensioner Bolt	37-52 Nm
Thermostat Housing Mounting Bolts	19-25 Nm
Engine Lifting Eye Bolts	37-52 Nm
Water Bypass Pipe Bracket Bolts	19-25 Nm
Coolant Return Pipe Bracket Bolt	19-25 Nm
Distributor Mounting Bolts	19-25 Nm
Intake Manifold Attaching Bolt/Nuts	Tighten in sequence to 14-19 Nm (11-17 lbs ft)
Spark Plugs	15-23 Nm
Oil Pump Cover Screws	6-8 Nm
Connecting Rod Bearing Cap Bolts	Tighten to 22-27 Nm (16-19 lb ft), then an additional 90 +/-5 degrees.
Main Bearing Cap Bolts	18-22 Nm

Camshaft, Engine

Intake ..... 1.6859 - 1.6918 in

Exhaust ..... 1.7003 - 1.7062 in

Oil Drain Plug	30-41 Nm
Timing Belt Tensioner Bolt	37-52 Nm
Timing Belt Cover Bolts	8-10 Nm
Crankshaft Pulley Bolt	157-167 Nm
Splash Shield Bolts	8-10 Nm
Engine Mount Through Bolt	86-116 Nm

1993 Ford Probe L4-121 2.0L DOHC VIN A MFI

Engine Mount Attaching Nuts	74-103 Nm
Generator Upper Mounting Bolt	19-25 Nm
Generator Lower Through Bolt	37-52 Nm
P/S pump Through Bolt	43-61 Nm
P/S Pump Lock Bolt	31-46 Nm
P/S Pump Belt Shield Bolts	7-9 Nm
P/S Hose Bracket Hold Down Bolts	8-10 Nm
Water Pump Bolts	19-25 Nm
Water Pump Pulley Bolts	8-10 Nm
Converter Inlet to Exhaust Manifold Nuts	37-52 Nm
Stiffener Mounting Bolts	19-25 Nm
Rear Main Seal to Stiffener Nuts	8-10 Nm
Oil Pickup Tube Mounting Bolts	8-10 Nm
Oil Pump Attaching Bolts	19-25 Nm
A/C Compressor Bracket Mounting Bolts	37-52 Nm
A/C Compressor Mounting Bolts	24-35 Nm
Cylinder Head Bolts	1. First tighten to 18-22 Nm (13-16 lbs ft)
	2. Apply a paint mark to the cylinder head bolts and turn the bolts 90+/-5 in sequence. Then turn an additional 90+/-5 in the same sequence
Cylinder Head Cover Bolts	Tighten in two steps in sequence to 8-10 Nm (52-69 lb in).
Generator Bracket Nut and Bolt	19-25 Nm
Coolant Temp Sensor Mounting Bolts	19-25 Nm
Camshaft Sprocket Bolts	49-61 Nm
Camshaft Bearing Cap Bolts	Tighten in sequence in three steps to 12-14 Nm (100-126 lbs in).
Exhaust Manifold Mounting Bolts	16-23 Nm
Exhaust Manifold Mounting Nuts	20-28 Nm
Heated Oxygen Sensor	30-49 Nm
EGR Pipe to Exhaust Manifold	32-47 Nm
Exhaust Manifold Heat Shield Bolts	8-10 Nm
Oil Filter	6 Nm Tighten 1-1/6 turns after the gasket touches mounting surface.
Oil Pressor Sensor	12-17 Nm
Intake Manifold Support Bracket Bolts	37-52 Nm
Flywheel Bolts	96-103 Nm
Flex Plate Bolts	96-103 Nm

1993 Ford Probe L4-121 2.0L DOHC VIN A MFI

Rear Main Seal Housing to Block Bolts	8-10 Nm
Engine to Transaxle Mounting Bolts	68-99 Nm
Starter Bolts	31-46 Nm
Halfshaft Support Bearing Bolts	43-61 Nm
Wheel Lug Nuts	89-117 Nm
Fuel Filter Bracket Bolts	8-11 Nm
Crankshaft Rear Cover Plate Bolt	8-10 Nm
Idler Bolt	37-52 Nm
Engine Mount Bracket Bolts	43-61 Nm
Timing Belt Tensioner Bolt	37-52 Nm
Thermostat Housing Mounting Bolts	19-25 Nm
Engine Lifting Eye Bolts	37-52 Nm
Water Bypass Pipe Bracket Bolts	19-25 Nm
Coolant Return Pipe Bracket Bolt	19-25 Nm
Distributor Mounting Bolts	19-25 Nm
Intake Manifold Attaching Bolt/Nuts	Tighten in sequence to 14-19 Nm (11-17 lbs ft)
Spark Plugs	15-23 Nm
Oil Pump Cover Screws	6-8 Nm
Connecting Rod Bearing Cap Bolts	Tighten to 22-27 Nm (16-19 lb ft), then an additional 90 +/-5 degrees.

Connecting Rod, Engine

Refer to **Engine/Specifications/Mechanical** for tightening torque.

Crankshaft, Engine

Refer to Engine/Specifications/Mechanical for tightening torque. See: Engine, Cooling and Exhaust/Engine/Specifications

Oil Drain Plug	30-41 Nm
Timing Belt Tensioner Bolt	37-52 Nm
Timing Belt Cover Bolts	8-10 Nm
Crankshaft Pulley Bolt	157-167 Nm
Splash Shield Bolts	8-10 Nm
Engine Mount Through Bolt	86-116 Nm
Engine Mount Attaching Nuts	74-103 Nm
Generator Upper Mounting Bolt	19-25 Nm
Generator Lower Through Bolt	37-52 Nm
P/S pump Through Bolt	43-61 Nm
P/S Pump Lock Bolt	31-46 Nm

P/S Pump Belt Shield Bolts	7-9 Nm
P/S Hose Bracket Hold Down Bolts	8-10 Nm
Water Pump Bolts	19-25 Nm
Water Pump Pulley Bolts	8-10 Nm
Converter Inlet to Exhaust Manifold Nuts	37-52 Nm
Stiffener Mounting Bolts	19-25 Nm
Rear Main Seal to Stiffener Nuts	8-10 Nm
Oil Pickup Tube Mounting Bolts	8-10 Nm
Oil Pump Attaching Bolts	19-25 Nm
A/C Compressor Bracket Mounting Bolts	37-52 Nm
A/C Compressor Mounting Bolts	24-35 Nm
Cylinder Head Bolts	Tighten in two steps: 1. First tighten to 18-22 Nm (13-16 lbs ft) 2. Apply a paint mark to the cylinder head bolts and turn the bolts 90+/-5 in sequence. Then turn an additional 90+/-5 in the same sequence.
Cylinder Head Cover Bolts	Tighten in two steps in sequence to 8-10 Nm (52-69 lb in).
Generator Bracket Nut and Bolt	19-25 Nm
Coolant Temp Sensor Mounting Bolts	19-25 Nm
Camshaft Sprocket Bolts	49-61 Nm
Camshaft Bearing Cap Bolts	Tighten in sequence in three steps to 12-14 Nm (100-126 lbs in).
Exhaust Manifold Mounting Bolts	16-23 Nm
Exhaust Manifold Mounting Nuts	20-28 Nm
Heated Oxygen Sensor	30-49 Nm
EGR Pipe to Exhaust Manifold	32-47 Nm
Exhaust Manifold Heat Shield Bolts	8-10 Nm
Oil Filter	Tighten 1-1/6 turns after the gasket touches mounting surface.
Oil Pressor Sensor	12-17 Nm
Intake Manifold Support Bracket Bolts	37-52 Nm
Flywheel Bolts	96-103 Nm
Flex Plate Bolts	96-103 Nm
Rear Main Seal Housing to Block Bolts	8-10 Nm
Engine to Transaxle Mounting Bolts	68-99 Nm
Starter Bolts	31-46 Nm
Halfshaft Support Bearing Bolts	43-61 Nm
Wheel Lug Nuts	89-117 Nm

Fuel Filter Bracket Bolts	8-11 Nm
Crankshaft Rear Cover Plate Bolt	8-10 Nm
Idler Bolt	37-52 Nm
Engine Mount Bracket Bolts	43-61 Nm
Timing Belt Tensioner Bolt	37-52 Nm
Thermostat Housing Mounting Bolts	19-25 Nm
Engine Lifting Eye Bolts	37-52 Nm
Water Bypass Pipe Bracket Bolts	19-25 Nm
Coolant Return Pipe Bracket Bolt	19-25 Nm
Distributor Mounting Bolts	19-25 Nm
Intake Manifold Attaching Bolt/Nuts	Tighten in sequence to 14-19 Nm (11-17 lbs ft)
Spark Plugs	15-23 Nm
Oil Pump Cover Screws	6-8 Nm

Cylinder Head Bolts	Tighten in two steps: 1. First tighten to 18-22 Nm (13-16 lbs ft) 2. Apply a paint mark to the cylinder head bolts for reference and turn the bolts 90+/-5 in sequence. Then turn an additional 90+/-5 in the same sequence.

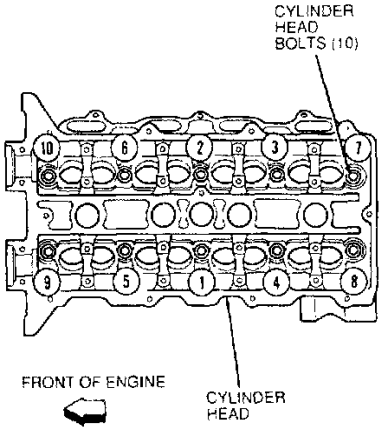

Fig. 11, Cylinder Head Bolt Tightening Sequence

Drive Belt

ALTERNATOR

New ..... 740 - 830 Newtons (170 - 180 lb)
Used ..... 500 - 680 Newtons (110 - 150 lb)
Limit ..... 390 Newtons (88 lb)

P/S, P/S + A/C

New ..... 590 - 780 Newtons (140 - 170 lb)
Used ..... 500 - 680 Newtons (110 - 150 lb)
Limit ..... 390 Newtons (88 lb)

Engine Oil Drain Plug

Oil Drain Plug Torque ..... 22-30 ft lb

Intake Manifold Attaching Bolts and Nuts	Tighten in sequence to 14-19 Nm
Intake Manifold Support Bracket Bolts	37-52 Nm

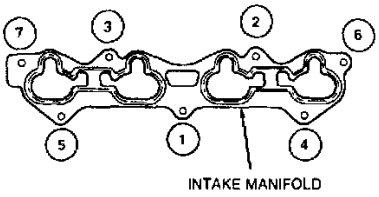

Intake Manifold Tightening Sequence

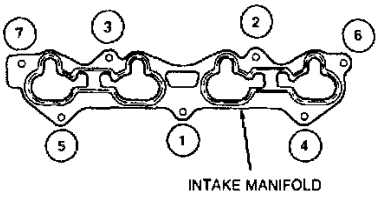

Intake Manifold Tightening Sequence

Engine Control Module

POWERTRAIN CONTROL MODULE (PCM) TORQUE SPECIFICATIONS

PCM retainer screw ..... 2.7-3.7 Nm (24-32 in lb)

Flex Plate

Refer to **Engine/Specifications/Mechanical** for tightening torque. See: Engine, Cooling and Exhaust/Engine/Specifications

Flywheel

Refer to **Engine/Specifications/Mechanical** for tightening torque. See: Engine, Cooling and Exhaust/Engine/Specifications

Fuel Filter

Fuel Filter Bracket Nuts ..... 8.0-11.0 Nm (71-97 lb in)

Injector Resistance

Fuel Injector Resistance

Injector Resistance specification can be found in **Powertrain Management/Computers and Controls/Testing and Inspecton/Pinpoint Test**

Look through Test H and look for Injector Resistance.

Torque

Fuel Lines to Pressure Regulator
and Fuel Injection Supply Manifold ..... 8-11 Nm (71-97 lb in)

Fuel Rail Attaching Bolts ..... 19-25 Nm (14-18 lb in)

Fuel Pressure Regulator

Fuel Pressure Regulator Retaining Bolts ..... 8-11 Nm (71-97 in lb)

Fuel Rail

Fuel Lines to Pressure Regulator
and Fuel Injection Supply Manifold ..... 8-11 Nm (71-97 lb in)

Fuel Rail Attaching Bolts ..... 19-25 Nm (14-18 lb in)

System Specifications

Fuel Tank Strap Bolts ..... 43-89 Nm (32-45 lb ft)

Fuel Tank Shield Nut ..... 8-11 Nm (71-97 lb in)

Fuel Tank Heat Shield Nuts ..... 8-11 Nm (71-97 lb in)

Fuel Tank Mounting Straps

Fuel Tank Strap Bolts ..... 43-89 Nm (32-45 lb ft)

Idle Speed/Throttle Actuator - Electronic

TORQUE SPECIFICATIONS

IAC BPA retaining screws ..... 2.5-3.5 Nm (22-31 in lb)

Automatic Transmission

BASE TIMING

Data Link Connector Grounded ..... 12° ± 1° BTDC

Manual Transmission

BASE TIMING

Data Link Connector Grounded ..... 10° ± 1° BTDC

Center Crash Sensor Bolts	9-12 Nm
RH Crash Sensor Bolts	9-12 Nm
LH Crash Sensor Bolts	9-12 Nm

Intake Air Temperature Sensor

TORQUE SPECIFICATION

Intake air temperature sensor ..... 7-12 Nm (62-106 in lb)

M/T Torque Data

5-Speed Manual Transaxle — All Vehicles — Except Tracer/Festiva

Component	N·m	Lb-Ft
Transaxle Case-to-Clutch Housing	18-24	13-18
Reverse Idler Shaft-to-Case	21-27	15-20
Fork Interlock Sleeve Pin	16-20	12-15
Detent Plunger Retainer Screw	7.5-11	6-8
Back Up Lamp Switch	16-20	12-15
Control Selector Plate	8-11	6-8
Speedo Retaining	2.3	1.5-2
Reverse Shift Relay Lever Bracket	8-11	6-8
Filler Plug	12-20	9-15
Clutch Release Fork to Shaft	40-41	30-41
Shift Lever Cover Screws	2-3	1.5-2.0

MTX 5-spd M/T, Transaxle (All except Tracer/Festiva)

5-Speed Manual Transaxle — Tracer

Component	N·m	Lb-Ft
Transaxle Case Bolts	18-20	13-14
Drain Plug	39-54	29-40
Backup Lamp Switch	25-34	18-25
Speedometer Gear Assembly to Clutch Housing	7.8-10.8	69-95 (lb-in)
Breather Cover to Clutch Housing	7.8-10.8	69-95 (lb-in)
Change Arm Bolt	12-16	9-12
Transaxle Case to Clutch Housing	19-26	13-19
Guide Bolt	9-12	7-9
Lock Bolt to Transaxle Case	19-26	14-19
Input Gear Lock Nut	128-206	94-152
Main Shaft Lock Nut	128-206	94-152
Rear Cover	8-11	6-8

MTX 5-spd M/T, Transaxle (Tracer)

TRANSAXLE, MANUAL — CONT'D

4 and 5-Speed Manual Transaxle — Festiva

Component	N·m	Lb-Ft
Backup Lamp Switch	20-29	15-22
Baffle Plate	10-13	6-8
Clutch Cover	18-26	13-20
Clutch Pedal Pivot Bolt	20-34	14-25
Detent Plug (1-2)	15-21	11-15
Detent Plug (3-4)	15-21	11-15
Detent Plug (4-5)	15-21	11-15
Fifth Gear Switch/Fourth Gear Switch	20-29	15-22
Oil Guide	8-11	6-8
Release Bearing Fork	35-41	25-3C
Reverse Detent Plate	8-11	6-8
Shift Gate	8-11	6-8
Shift Lever Housing	7-10	5-7
Shift Rod	16-22	12-17
Stabilizer Rod	31-46	23-34
Transmission Case	19-26	14-19

MTX 5-spd M/T, Transaxle Assembly (Festiva)

Transaxle — 5 Speed — Probe GL/LX, GT	N·m	Lb-Ft	Lb-In
Gearshift Housing Assembly	7-10	–	60-84
Extension Bar to Transaxle	31-46	23-34	–
Shift Control Rod	7-10	–	60-84
Transaxle Case to Clutch Housing (Non-Turbo)	18-20	13-14	–
Transaxle Case to Clutch Housing (Turbo)	37-52	27-38	–
Transaxle to Engine	89-117	66-86	–
Center Transaxle Mount Bolts	36-54	27-40	–
Center Transaxle Mount Nuts	64-89	47-66	–
Transaxle to Left Mount (Non-Turbo)	37-52	27-38	–
Transaxle to Left Mount (Turbo)	67-93	49-69	–
Left Mount to Bracket	67-93	49-69	–
Crossmember Bolts	36-54	27-40	–
Crossmember Nuts	75-93	55-69	–
Right Transaxle Mount	85-117	63-86	–
Flywheel Inspection Cover	8-11	–	69-95
Slave Cylinder	19-26	14-19	–
Gusset Plate to Transaxle	37-52	27-38	–
Locknuts (Input and Main Shaft)	128-196	94-145	–
Interlock Plate	18-26	13-10	–
Change Arm (Non-Turbo)	12-14	–	104-122
Rear Cover	8-11	–	68-95
Reverse Shift Lever (Turbo)	8-11	–	69-95

MTX 5-spd M/T, Transaxle Assembly (Probe GL/LX, GT)

Installation of Transaxle — 4 and 5-Speed — Tracer

Component	N·m	Lb-Ft
Transaxle to Engine Bolts	63-89	47-66
No. Two Engine Mount Retaining Nut	37-52	27-38
Starter Retaining Bolts	31-46	23-34
Extension Bar Retaining Bolt	31-46	23-34
Control Rod to Transaxle	16-22	12-17
Lower Arm Ball Joints to Knuckle	43-54	32-40
Stabilizer Bar Mounting Brackets to Vehicle Frame	31-44	23-33
Wheel Lug Nuts	90-120	65-87
Upper Transaxle to Engine Mounting Bolts	64-89	47-66
Drain Plug	39-54	29-40

Installation of Transaxle — 4 and 5-Speed — Festiva

Component	N·m	Lb-Ft
Upper and Lower Transaxle Attaching Bolts	64-89	47-66
Steering Knuckle Clamp Bolt	43-54	32-40

MTX 5-spd M/T, Installation Of Transaxle (Tracer) (Festiva)

M/T Technical Data

IDENTIFICATION

Vehicle	Engine	Pressure Plate Diameter MM	Pressure Plate Diameter IN.	Pressure Plate Color Identification (Paint Daub)	Clutch Disc Diameter MM	Clutch Disc Diameter IN.	Clutch Disc No. of Springs	Clutch Disc Color Identification (Paint Daub)
Taurus SHO		235	9.25	Yellow	235	9.25	2 Bright Red (Large) 2 Aqua Marine (Small) 2 Silver Grey (Large) 2 Red (Small)	Yellow
Tempo/Topaz	2.3L HSC	215	8.5	Blue	215	8.5	2 Sand Yellow (Large) 2 Black (Small) 2 Marine Blue (Large) 2 Bright Red (Small)	Blue
Escort	1.9L CFI, EFI	215	8.5	Orange	215	8.5	2 Sand Yellow (Large) 2 Black (Small) 2 Marine Blue (Large) 2 Bright Red (Small)	Orange
Tracer	1.6L EFI	190	7.48	None	190	7.48	6	None
Festiva	1.3L 2V	180	7.087	None	180	7.087	4	None

MTX 5-spd M/T, Clutch

CLUTCH SPECIFICATIONS

Probe

			Non-Turbo	Turbo
Clutch Control Type			Hydraulic	
Pressure Plate	Type		Diaphragm Spring	
	Set Load N (kg lb)		4317 (440, 968)	5494 (560, 1232)
	Outer Diameter mm (in.)		225 (8.858)	240 (9.449)
	Inner Diameter mm (in.)		150 (5.906)	160 (6.299)
Clutch Disc		Pressure Plate Side mm (in.)	4.1 (0.14)	3.5 (0.14)
	Thickness	Flywheel Side mm (in.)	3.5 (0.14)	

MTX 5-spd M/T, Clutch Control (Probe)

Gear Ratios, Probe, Tracer, Festiva

		Probe Non-Turbo	Probe Turbo	Tracer	Festiva
Gear Ratio	1st	3.307	3.250	3.153	3.454
	2nd	1.833	1.772	1.842	1.944
	3rd	1.233	1.194	1.290	1.275
	4th	0.914	0.926	0.972	0.861
	5th	0.717	0.711	0.775	0.692
	Reverse	3.166	3.461		3.583
Final Gear Ratio		4.105		4.105/ 3.85[1]	3.777

[1]Sedan and Hatchback

MTX 5-spd M/T, Gear Ratios (Probe/Tracer/Festiva)

Drain Plug	29-43 ft.lb

Oxygen Sensor

TORQUE SPECIFICATIONS

Heated oxygen sensor ..... 30-49 Nm (22-36 ft lb)

Switch Torque

Switch Torque

Cooling Fan Switch	8-18 ft.lb

Safing Sensor Bolts	7-9 Nm

Anchor Bolts	38-78 Nm

Spark Plug Gap

SPARK PLUG

Plug Type AGSP-32C
Electrode Gap ..... 0.039-0.043 in (1.0-1.1 mm)

Tightening Torque

SPARK PLUG

Plug Type AGSP-32C
Tightening Torque ..... 11-17 ft lb (15-23 Nm)

Front

Ball Joint Clamp Bolt ..... 25-42 ft lb
Extension Bar Nut ..... 28-38 ft lb
Front Crossmember ..... 68-96 ft lb
Halfshaft Attaching Nut ..... 174-235 ft lb
Intermediate Shaft to Pinion Shaft Bolt ..... 13-20 ft lb
Lower Control Arm Front Bushing Bolt ..... 58-78 ft lb
Lower Control Arm Rear Bushing Bolts ..... 69-96 ft lb
Lower Control Arm Rear Bushing Nut ..... 66-86 ft lb
Power Steering Pump Through Bolt ..... 32-45 ft lb
Pulley Nut ..... 36-43 ft lb
Rear Engine Mount Through Bolt ..... 63-86 ft lb
Rear Engine Mount To Transaxle Bolts ..... 50-68 ft lb
Speed Sensor Retaining Bolts ..... 12-17 ft lb
Stabilizer Bar To Stabilizer Control Link Nuts ..... 27-40 ft lb
Stabilizer Control Link To Lower Control Arm Nut ..... 27-40 ft lb
Steering Gear Mounting Bracket Bolts ..... 27-40 ft lb
Steering Knuckle To Strut ..... 68-86 ft lb
Strut Retaining Nut ..... 66-86 ft lb
Supply Line Manifold Bolts ..... 10-13 ft lb
Tie Rod End ..... 22-33 ft lb
Transaxle Cradle Nuts & Bolts ..... 50-77 ft lb
Transaxle Shift Linkage Bolt ..... 14-18 ft lb
Transverse Member Bolts ..... 68-96 ft lb
Wheel Lug Nuts ..... 65-87 ft lb

Rear

Adjusting Cam Bolt ..... 58-86 ft lb
Front Lateral Link To Rear Crossmember Bolt ..... 58-86 ft lb
Rear Crossmember To Frame Bolts ..... 27-40 ft lb
Rear Lateral Link To Stabilizer Control Link Nuts ..... 27-40 ft lb
Speed Sensor Retaining Bolt ..... 3-5 ft lb
Spindle Through Bolt ..... 64-86 ft lb
Spindle To Strut Mounting Bolts ..... 69-87 ft lb
Stabilizer Bar To Stabilizer Control Link Nuts ..... 27-40 ft lb
Stabilizer Bracket Bolts ..... 27-40 ft lb
Stabilizer Bracket Nuts ..... 27-40 ft lb
Trailing Arm To Frame Bolt ..... 58-86 ft lb

Trailing Arm To Spindle Bolt ..... 64-86 ft lb
Upper Strut Retaining Nuts ..... 34-46 ft lb
Wheel Bearing Locknut ..... 130-174 ft lb
Wheel Lug Nuts ..... 65-87 ft lb

Crossmember Bolts	27-40 ft.lb
Crossmember Nut	55-69 ft.lb

Wheel Bearing

Refer to Wheel Bearing/Adjustments for proper tightening procedure on the rear tapered wheel bearing. See: Maintenance/Wheels and Tires/Wheel

Torque

Throttle Body Mounting Bolts and Nuts ..... 19-25 Nm (14-19 ft lb)

Throttle Cable Bracket	14-19 ft.lb
Throttle Cam	61-87 in.lb

Throttle Cable/Linkage

Free Play ..... 0.060-0.180 in (1.5-4.5 mm)

Wheel Lug Nuts	65-87 ft.lb

Compression Check

AllData Editors Note - Ford does not provide a cranking pressure specification, only an acceptable range.

Compression pressure check should be performed with engine at normal operating temperature with spark plugs removed, distributor connector disc

Cooling System

Thermostat Opening Temperature ..... 180° F
Radiator Cap Relief Pressure ..... 13 psi

System Specifications

EGR VALVE
Vacuum To Open ..... 5.91 in Hg (150 mmHg)
Coolant Temp. Minimum ..... 122°F (50°C)

ROLLOVER/VENT VALVE
Tank pressure to OPEN (max.) ..... 1.0 psi (7.0 kPa)
Air pressure to vent tank (max.) ..... 0.7 psi (4.9 kPa)

TWO-WAY CHECK VALVE
Vacuum To Open Port A (Fuel Tank Pressure) ..... 1.01 in Hg (26 mmHg)
Vacuum To Open Port B (Barometric Pressure) ..... 1.73 in Hg (44 mmHg)

EGR Valve

EGR VALVE
Vacuum To Open ..... 5.91 in Hg (150 mmHg)
Coolant Temp. Minimum ..... 122°F (50°C)

ROLLOVER/VENT VALVE
Tank pressure to OPEN (max.) ..... 1.0 psi (7.0 kPa)
Air pressure to vent tank (max.) ..... 0.7 psi (4.9 kPa)

TWO-WAY CHECK VALVE
Vacuum To Open Port A (Fuel Tank Pressure) ..... 1.01 in Hg (26 mmHg)
Vacuum To Open Port B (Barometric Pressure) ..... 1.73 in Hg (44 mmHg)

Key On Engine Off	35 - 45 psi
Key On Engine Running	28 - 33 psi

Rollover Valve, Fuel Tank

ROLLOVER/VENT VALVE

Tank pressure to OPEN (max.) ..... 1.0 psi (7.0 kPa)
Air pressure to vent tank (max.) ..... 0.7 psi (4.9 kPa)

TWO-WAY CHECK VALVE

Vacuum To Open Port A (Fuel Tank Pressure) ..... 1.01 in Hg (26 mmHg)
Vacuum To Open Port B (Barometric Pressure) ..... 1.73 in Hg (44 mmHg)

System Specifications

Cooling System Capacity ..... 7.4 qts

Coolant

Cooling System Capacity ..... 7.4 qts

Engine Oil

Engine oil refill ..... 3.7 Qts.(3.5L)

Note: Including oil filter.

Automatic Transmission Fluid Capacity Approximate. Make final check with dipstick.	9.3 qt (US)

TYPE:	Standard		90 HP (Hypoid Gear Oil)
	Tempo, Topaz 4WD		90 HP* (Hypoid Gear Oil for Traction-LOK Differential)
	Traction-LOK		90 HP*
CAPACITY, Refill:	7.5" ring gear:	1989-91 Thunderbird/Cougar	3.0 pt (US)
		Others	3.25 pt (US)
	8.8" ring gear:	Mark VIII	3.0 pt (US)
		Thunderbird/Cougar	3.25 pt (US)
		Others	3.75 pt (US)
		Tempo, Topaz 4WD	1.3 pt (US)

Type & Viscosity	75W-90 GL-4 GL-4 -- Gear Oil, API Service GL-4
Capacity (Refill)	5.8 pt (US)

Fuel Tank

FUEL TANK CAPACITY

Liters 58.5

Gallons 15.5

Refrigerant

Refrigerant Capacity ..... 800 grams (28.21 oz)

Refrigerant Oil

Refrigerant Oil System Capacity ..... 3.3 oz

Refrigerant

Refrigerant Capacity ..... 800 grams (28.21 oz)

Hydraulic brake fluid color must conform with the requirements of Federal Motor Vehicle Safety Standard 116. Under this standard, brake fluids are visually different from other automotive fluids such as transmission, power steering and engine oil.

Brake Fluid	DOT 3

System Specifications

COOLING SYSTEM FLUID, PREMIUM

Ford Part No.
- U.S.A (Except Oregon) ..... E2FZ-19549-AA or -B
- Canada CXC-8-B
- Oregon F5FZ-19549-CC

Ford Specification ESE-M97B44-A

COOLING SYSTEM FLUSH

Ford Part No. F1AZ-19A503-A
Ford Specification ESR-M14P7-A

Coolant Mixture with Water 50%

Warning: Do not mix coolant types. Check the owners manual or refer to your local dealer for the correct coolant type.

Coolant

COOLING SYSTEM FLUID, PREMIUM

Ford Part No.
- U.S.A (Except Oregon) ..... E2FZ-19549-AA or -B
- Canada CXC-8-B
- Oregon F5FZ-19549-CC

Ford Specification ESE-M97B44-A

COOLING SYSTEM FLUSH

Ford Part No. F1AZ-19A503-A
Ford Specification ESR-M14P7-A

Coolant Mixture with Water 50%

Warning: Do not mix coolant types. Check the owners manual or refer to your local dealer for the correct coolant type.

Fluid Type Ensure the correct automatic transmission fluid is used. Check the container verify the fluid is MERCON(r) approved. Transmission fluid requirements are indicated on the transmission dipstick handle.	MERCON(r) V ATF See TSB 06-14-4

Refrigerant

Refrigerant Type R-12

Refrigerant Oil

Refrigerant Oil Type ..... [1]

[1] Motorcraft YN-9 or equivalent

Refrigerant

Refrigerant Type R-134a

System Specifications

Grade Specification ..... API GL-4 or GL-5
All Season ..... SAE 75W-90 Gear Oil
Above 10°C (50°F) ..... SAE 80W-90

Fluid - M/T

Grade Specification ..... API GL-4 or GL-5
All Season ..... SAE 75W-90 Gear Oil
Above 10°C (50°F) ..... SAE 80W-90

Steering

Power Steering Fluid Type ..... Mercon**(r)** ATF

Vehicle: Locations

A-Z Component List

Component Name: Location

A/C Clutch Field Coil: RH front of engine, part of A/C compressor assembly
A/C Clutch Thermal Protection Switch: RH front of engine, near A/C compressor assembly
A/C High Pressure Switch: RH front of engine compartment
A/C Relay: LH side of engine compartment, in engine compartment fuse box
A/C-Heater Control Assembly: Center of I/P
A/C-Heater Control Assembly Illumination: Behind center of I/P
ABS Control Module: Behind LH side of I/P, left of steering column
ABS Hydraulic Unit: LH rear of engine compartment
ABS Main Relay: LH side of engine compartment, on RH side of engine compartment fuse box
ABS Test Connector C229: Behind LH side of I/P, near ABS control module
Air Bag Diagnostic Monitor: Behind LH side of I/P, right of interior fuse panel
Alternator: RH rear of engine
Anti-theft Control Unit: Behind LH side of I/P, on central processing unit (CPU)
Ashtray Illumination: Under center console, in ashtray
Backup Lamp Switch: LH side of engine, on front of transaxle
Barometric Pressure (BARO) Sensor: Behind RH center of I/P
Blower Assembly (With A/C): Behind RH side of I/P
Blower Assembly (Without A/C): Behind RH side of I/P
Blower Motor: Behind RH side of I/P. in blower assembly
Blower Motor Resistor: Behind RH side of I/P, in blower assembly
Brake Fluid Level Switch: LH rear of engine compartment on brake fluid reservoir
Brake On/Off Switch: Behind LH side of I/P, top of brake pedal support
Canister Purge (CANP) Solenoid Valve: RH rear of engine compartment
Central Processing Unit (CPU): Behind LH side of I/P, on rear of interior fuse panel: C2000
Center Radiator Crash Sensor: Center front of vehicle, near engine compartment hood latch assembly
Cigar Lighter: Center of center console, near ashtray
Cigar Lighter Illumination: Under center console, near cigar lighter
Clockspring Assembly: Top of steering column, part of combination switch
Clutch Cycling Pressure Switch: RH rear of engine compartment, on A/C accumulator
Clutch Pedal Position (CPP) Switch: Behind LH side of I/P, top of clutch pedal support
Condenser Fan Motor: Center front of vehicle, in front of radiator
Combination Switch: Top of steering column C207,
Coolant Temperature Sender: Top LH side of engine
Cooling Fan Motor: Front of engine compartment, behind radiator
Crankshaft Position (CKP) Sensor: Lower LH side of engine
Data Link Connector (DLC) C135 (Automatic): LH side of engine compartment, on fender apron
Data Link Connector (DLC) C135 (Manual): LH side of engine compartment, on fender apron
Data Link Connector (DLC) C191: LH side of engine compartment, on fender apron
Daytime Running Lamps (DRL) Control Module: Behind LH side of I/P, left of steering column
Distributor: Top LH front of engine
Dome/Map Lamp Assembly: Center of windshield header
DRL Relay: LH side of engine compartment, in engine compartment fuse box
EGR Solenoid Valve: RH rear of engine compartment
EGR Temperature Sensor: RH rear of engine compartment
EGR Valve Position Sensor: Center rear of engine
Engine Compartment Fuse Box: LH side of engine compartment, above wheel well
Engine Compartment Lamp: Underside of engine compartment hood
Engine Coolant Temperature (ECT) Sensor: Top LH side of engine
Engine Coolant Temperature Sensor (Cooling Fan): Top LH side of engine
Flasher Module: Behind LH side of I/P left of steering column
FPRC Solenoid Valve: RH rear of engine compartment
Fog Lamp Relay: LH side of engine compartment, in engine compartment fuse box
Fog Lamp Switch: Center of I/P
Fog Lamps: Lower front of vehicle on respective sides
Front Combination Lamps: Front of vehicle on respective sides
Fuel Injectors: Top of respective cylinders
Fuel Pump Relay: LH side of engine compartment in engine compartment fuse box
Fuel Pump/Fuel Gauge Sender: Below rear of car, inside fuel tank
Glove Box Lamp: Behind RH side of I/P
Glove Box Lamp Switch: Behind RH side of I/P
Graphic Equalizer: Lower center of I/P
Headlamp Relay: LH side of engine compartment, in engine compartment fuse box
Headlamp Retractor Control Module: Behind LH side of I/P, left of steering column

1993 Ford Probe L4-121 2.0L DOHC VIN A MFI

Headlamp Retractor Switch: Center of I/P
Headlamp Retractor Test Connector: LH side of engine compartment, in engine compartment fuse box
Headlamps: Front of vehicle, on respective sides
Heated Oxygen Sensor (HO2S): Lower center front of engine, in exhaust manifold
Heater Control Assembly: Center of I/P
Hi Mount Stop Lamp: Top center front of liftgate, at top of rear window
High Speed Blower Motor Relay: Behind RH side of I/P, in blower assembly
High Speed Condenser Fan Relay: LH side of engine compartment, on RH side of engine compartment fuse box
High Speed Cooling Fan Relay: LH front of vehicle, on front of upper radiator support
Hood Switch: Center front of vehicle, on engine compartment hood latch assembly
Horn Relay: LH side of engine compartment, in engine compartment fuse box
Horn Switches: In center of steering wheel
Idle Air Control (IAC) Solenoid Valve: Center rear of engine compartment
Idle Switch: Center rear of engine compartment
Ignition Coil: LH front of engine compartment
Ignition Control Module (ICM): LH rear of engine compartment
Ignition Key Cylinder Lamp: Top of steering column, near ignition switch
Ignition Key Reminder Switch (Ignition): Top of steering column, part of ignition switch
Ignition Key Reminder Switch (Shift Lock Override): Center of center console
Ignition Switch: Top of steering column
Inertia Fuel Shutoff Switch: Lower RH side of luggage compartment, behind wheel well
Instrument Cluster: Top LH side of I/P
Instrument Panel Dimming Module: LH side of I/P, left of steering column
Intake Air Temperature (AT) Sensor: Top LH side of engine compartment, on LH side of air cleaner assembly
Interior Fuse Panel: Behind LH side of I/P, near kick panel
Joint Connector C103: LH front of vehicle. near left fog lamp, on G103
Joint Connector C106: LH side of engine, on G106
Joint Connector C168: LH side of engine compartment, in engine compartment fuse box
Joint Connector C169: LH side of engine compartment, in engine compartment fuse box
Joint Connector C202: Behind top LH side of I/P, on G202
Joint Connector C203: Behind LH side of 1/P, on G203
Joint Connector C234: Behind LH side of I/P, taped to I/P harness
Joint Connector C245: Behind LH side of I/P, taped to front harness
Joint Connector C250: Below lower RH front of center console, near powertrain control module (PCM)
Joint Connector C262: Behind top LH side of I/P, taped to air bag harness
Joint Connector C269: Behind LH side of I/P, taped to I/P harness
Joint Connector C270: Behind LH side of I/P, taped to I/P harness
Joint Connector C300: Below LH front seat, on G300
Joint Connector C400: Lower center rear of luggage compartment, on G400
Keyless Entry Module: In front of RH quarter panel, behind quarter trim
Knock Sensor (KS): Rear of engine
Left Crash Sensor: LH front of vehicle, behind front bumper
Left Door Courtesy Lamp Switch: On LH "B" pillar, in rear of LH door jamb
Left Door Key Cylinder Lamp: In top rear of LH door, part of key cylinder
Left Door Key Cylinder Switch: In top rear of LH door, part of key cylinder
Left Door Lock Motor (With Anti-theft): In rear of LH door
Left Door Lock Motor (Without Anti-theft): In rear of LH door
Left Door Lock Switch: In top rear of LH door, part of key cylinder
Left Door Panel Lock Switch: On armrest of LH door
Left Footwell Courtesy Lamp: Under LH side of I/P
Left Front ABS Wheel Speed Sensor: On LH front wheel assembly
Left Front Door Speaker: In lower front of LH door
Left Headlamp Retractor: LH front of engine compartment
Left Heated Oxygen Sensor (HO2S): Lower center front of engine, in exhaust manifold
Left Horn: Inside front of LH front fender
Left Outside Door Handle Switch: In top rear of LH door, near handle assembly
Left Power Window Motor: In lower rear of LH door
Left Power/Heated Mirror: Top front of LH door
Left Rear ABS Wheel Speed Sensor: On LH rear wheel assembly
Left Rear Speaker: In front of LH quarter panel, behind quarter trim
Left Vanity Mirror Lamp: LH side of windshield header
License Plate Lamps: Center rear of liftgate, on respective sides of license plate
Liftgate Key Switch: In RH rear of luggage compartment
Liftgate Washer Motor: Lower RH rear of luggage compartment, on liftgate washer fluid reservoir
Liftgate Washer Switch: Center of I/P
Liftgate Wiper Motor: Inside LH rear of liftgate
Liftgate Wiper Switch: Center of I/P
Low Speed Blower Motor Relay: RH front of vehicle, on front of upper radiator support
Low Speed Condenser Fan Relay: LH side of engine compartment, on RH side of engine compartment fuse box
Low Speed Cooling Fan Relay: LH front of vehicle, on front of upper radiator support

1993 Ford Probe L4-121 2.0L DOHC VIN A MFI

Luggage Compartment Lamp: LH side of luggage compartment C422,
Luggage Compartment Lamp Switch: Center rear of luggage compartment, near hinge support
Main Window Control Switch: On armrest of LH door
Manual Lever Position Switch (Automatic): Lower front of transaxle
Mass Air Flow (MAF) Sensor: Top LH rear of engine compartment, on rear of air cleaner assembly
Moonroof Motor Assembly: Center of roof, behind moonroof
Moonroof Relay: Center of roof, behind moonroof
Moonroof Switch: Center of windshield header
Oil Pressure Sender: Lower RH rear of engine, near starter assembly
Overdrive Off Switch: Front of center console
Park Brake Switch: Below rear of center console, on par brake assembly
Park Lamp Relay: LH side of engine compartment, in engine compartment fuse box
Park Range Switch: Below center console, on front of gear selector assembly
Park/Neutral Position Switch (Manual): LH side of engine, on top of transaxle
PCM Power Relay: LH side of engine compartment, in engine compartment fuse box
Power Door Lock Relay: Top of RH kick panel
Power Lumbar/Bolster Compressor Motor: Under center rear of LH front seat
Power Lumbar/Bolster Switch: LH side of LH front seat
Power Mirror Switch: On armrest of LH door
Power Seat Lift Motor: Under center front of LH front seat
Power Seat Slide Motor: Under center front of LH front seat
Power Seat Switch: LH side of LH front seat
Power Seat Tilt Motor: Under center of LH front seat
Power Steering Pressure Switch: RH front of engine compartment, on power steering line
Powertrain Control Module (PCM) (Automatic): Below center front of center console
Powertrain Control Module (PCM) (Manual): Below center front of center console
Program Connector C424: In RH rear of luggage compartment
Pulse Signal Generator: LH side of engine. on top of transaxle
Radio (AM/FM Stereo): Center of I/P
Radio (Premium Sound With Graphic Equalizer): Center of I/P
Radio (Premium Sound): Center of I/P
Radio Amplifier: In front of RH quarter panel behind quarter trim
Radio Noise Capacitor: LH front of engine compartment, near ignition coil
Radio/CD Player (Premium Sound With CD Player and Subwoofer): Center of I/P
Radio/CD Player (Premium Sound With CD Player, Graphic Equalizer, and Subwoofer): Center of I/P
Rear Combination Lamps: Rear of vehicle, on respective sides
Rear Window Defrost Grid: On rear window
Rear Window Defrost Relay: RH front of vehicle, on front of upper radiator support
Rear Window Defrost Switch: Center of I/P
Right Crash Sensor: RH front of vehicle, behind front bumper
Right Door Courtesy Lamp Switch: On RH "B" pillar, in rear of RH door jamb
Right Door Key Cylinder Lamp: In top rear of RH door, part of key cylinder
Right Door Key Cylinder Switch: In top rear of RH door, part of key cylinder
Right Door Lock Motor (With Anti-theft): In rear of RH door
Right Door Lock Motor (Without Anti-theft): In rear of RH door
Right Door Lock Switch: In top rear of RH door, part of key cylinder
Right Door Panel Lock Switch: On armrest of RH door
Right Footwell Courtesy Lamp: Under RH side of I/P
Right Front ABS Wheel Speed Sensor: On RH front wheel assembly
Right Front Door Speaker: In lower front of RH door
Right Headlamp Retractor: RH front of engine compartment
Right Heated Oxygen Sensor (HO2S): Lower center rear of engine, in exhaust manifold
Right Horn: Inside front of LH front fender
Right Outside Door Handle Switch: In top rear of RH door, near handle assembly
Right Power Window Motor: In lower rear of RH door
Right Power/Heated Mirror: Top front of RH door
Right Rear ABS Wheel Speed Sensor: On RH rear wheel assembly
Right Rear Speaker: In front of RH rear quarter panel, behind quarter trim
Right Vanity Mirror Lamp: RH side of windshield header
Right Window Switch: On armrest of RH door
Safing Sensor: Behind center of I/P
Seat Belt Buckle Switch: In driver's seat belt buckle assembly
Self Test Input (STI) Connector C190: LH side of engine compartment, on fender apron
Shift Lock Actuator: Below front of center console, near rear of gear selector assembly
Speed Control Module: Behind LH side of I/P, left of steering column
Speed Control Servo: LH rear of engine compartment
Speed Control Switch Assembly: On steering wheel
SPOUT Test Connector 0177: LH side of engine compartment, near data link connectors (DLC)
Starter Clutch Pedal Position (SCPP) Switch: Behind LH side of I/P, top of clutch pedal support
Starter Interrupt Relay: LH side of engine compartment, in engine compartment fuse box

Starter Motor: Lower rear of engine
Steering Column Air Bag: Center of steering wheel
Subwoofer Amplifier: In front of LH quarter panel, behind quarter trim
Subwoofer Assembly: RH rear of luggage compartment
Throttle Position (TP) Sensor: Top LH rear of engine, on throttle body
Transaxle Control Module (TCM): Below center of I/P, forward of powertrain control module (PCM)
Transaxle Control Solenoid Valve: LH side of engine, on top of transaxle
Vehicle Speed Sensor (VSS): Lower rear of transaxle
Volume Air Flow (MAF) Sensor: Top LH side of engine compartment, on air cleaner assembly
VRIS Solenoid Valve #1: Center rear of engine compartment
VRIS Solenoid Valve #2: Center rear of engine compartment
Washer Fluid Level Sensor: RH front of engine compartment, in windshield washer fluid reservoir
Windshield Washer Motor: RH front of engine compartment, in windshield washer fluid reservoir
Windshield Wiper Motor: Top LH side of safety wall

Part 1 of 4

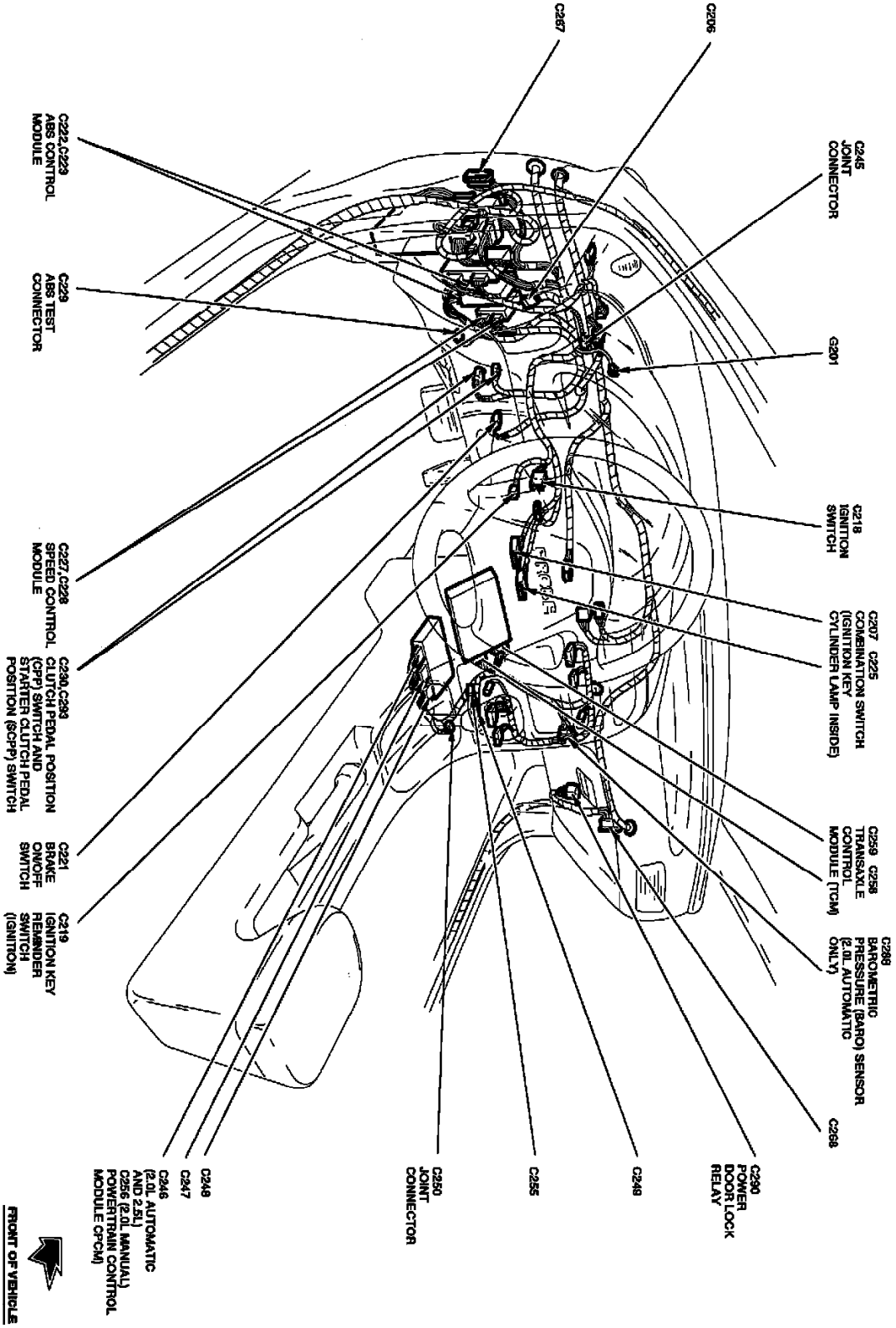

Component Locations

Part 2 of 4

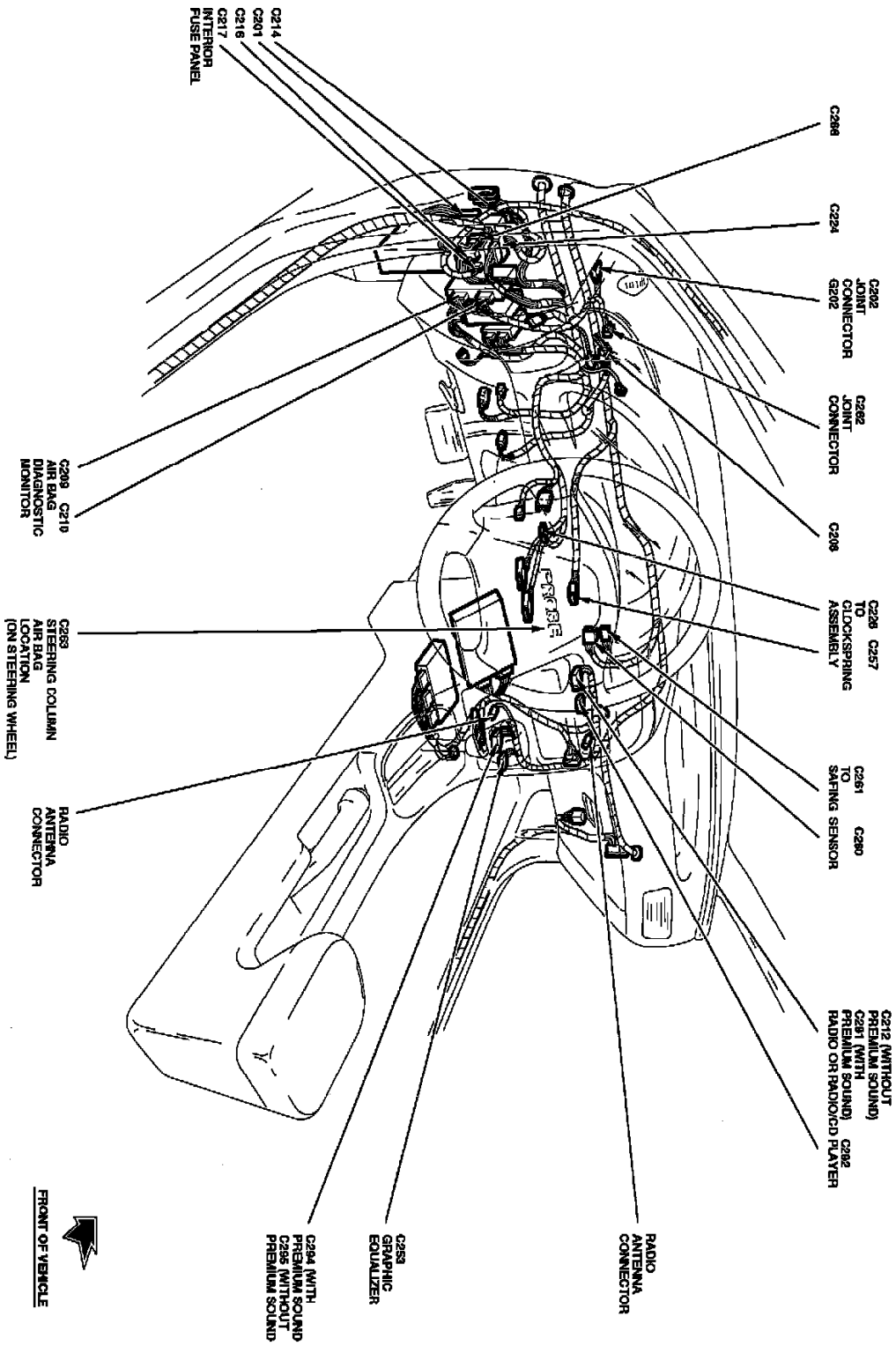

Component Locations

Part 3 of 4

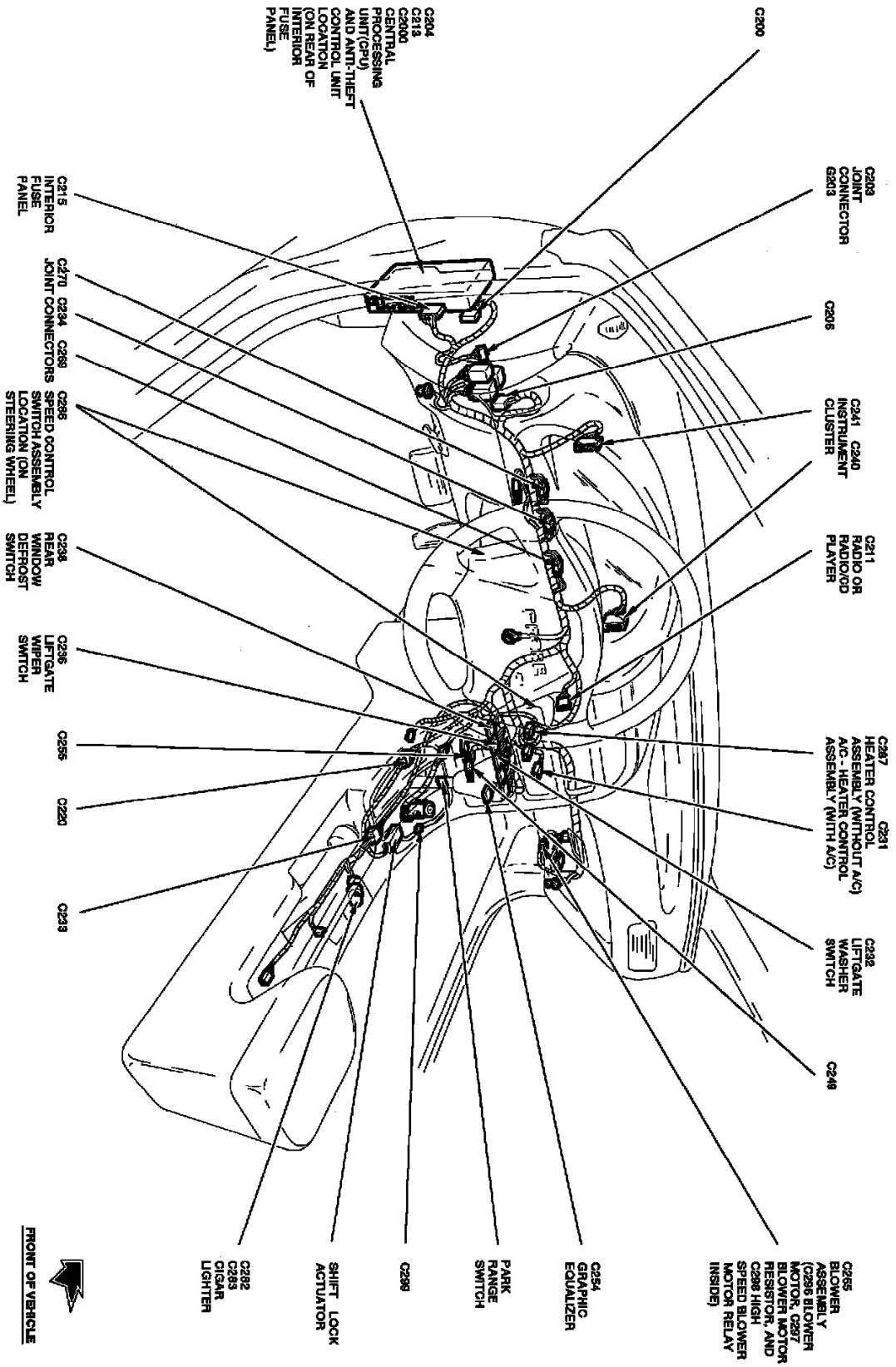

Component Locations

Part 4 of 4

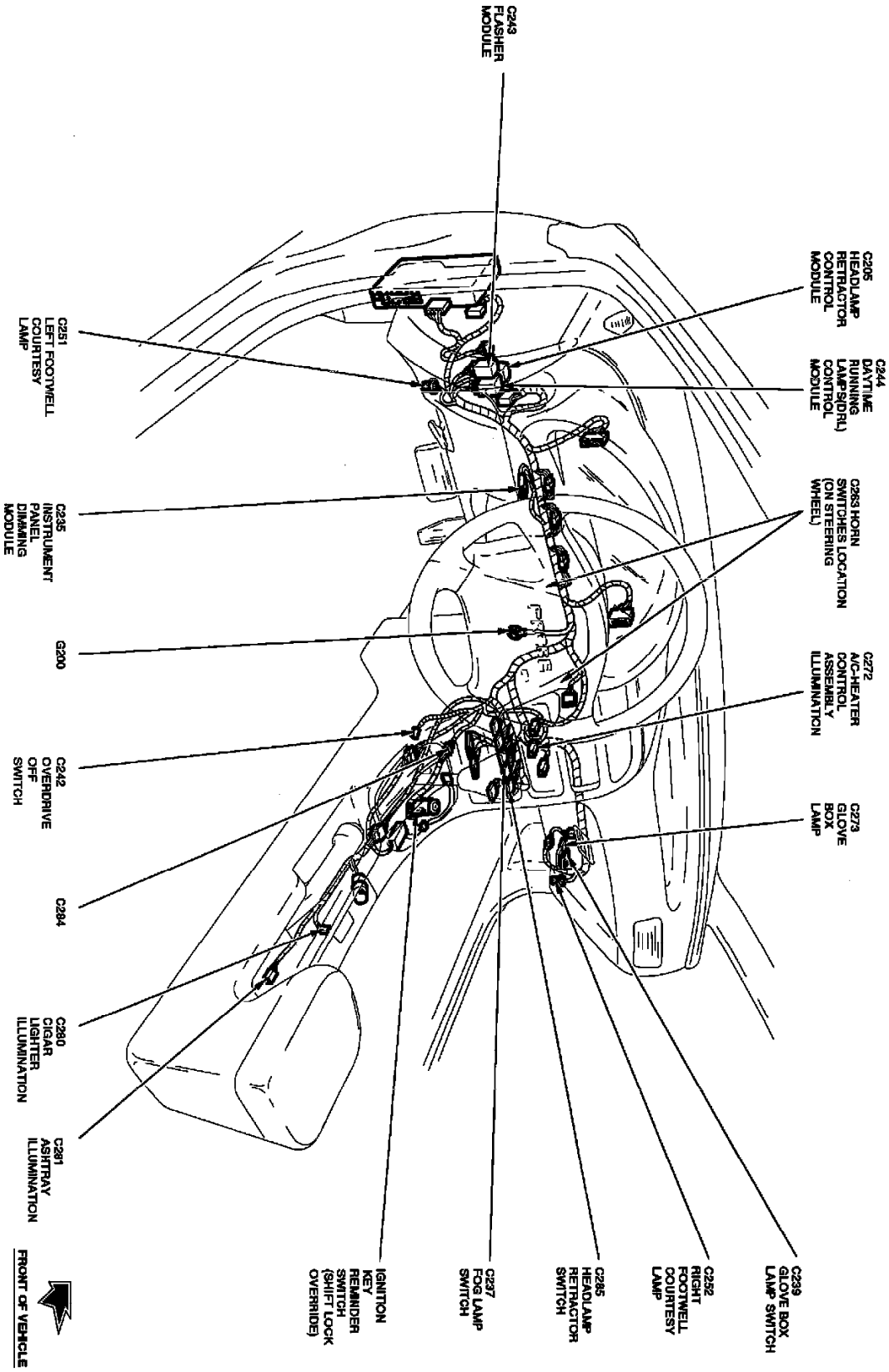

Component Locations

Part 1 of 3

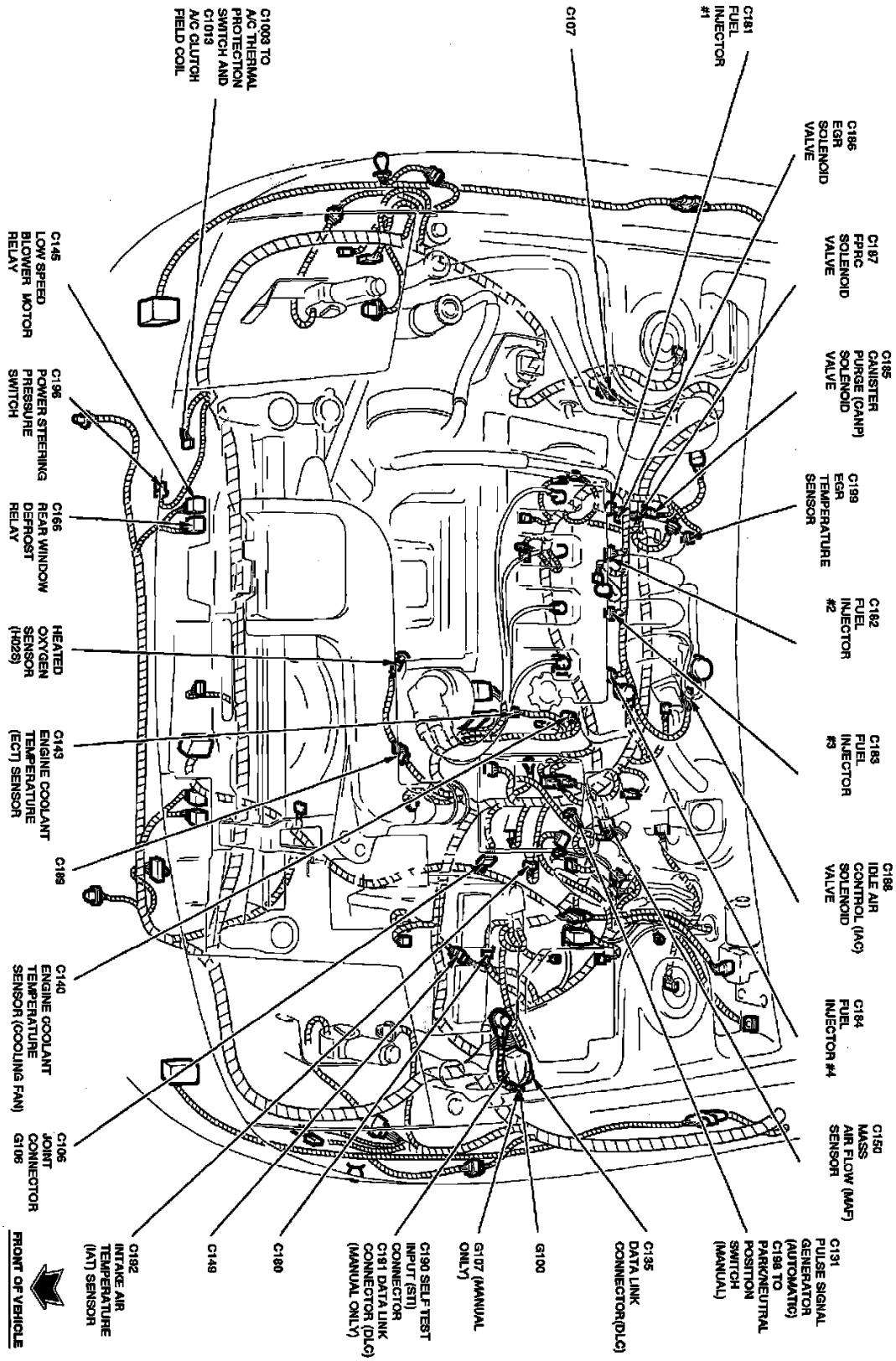

Component Locations

Part 2 of 3

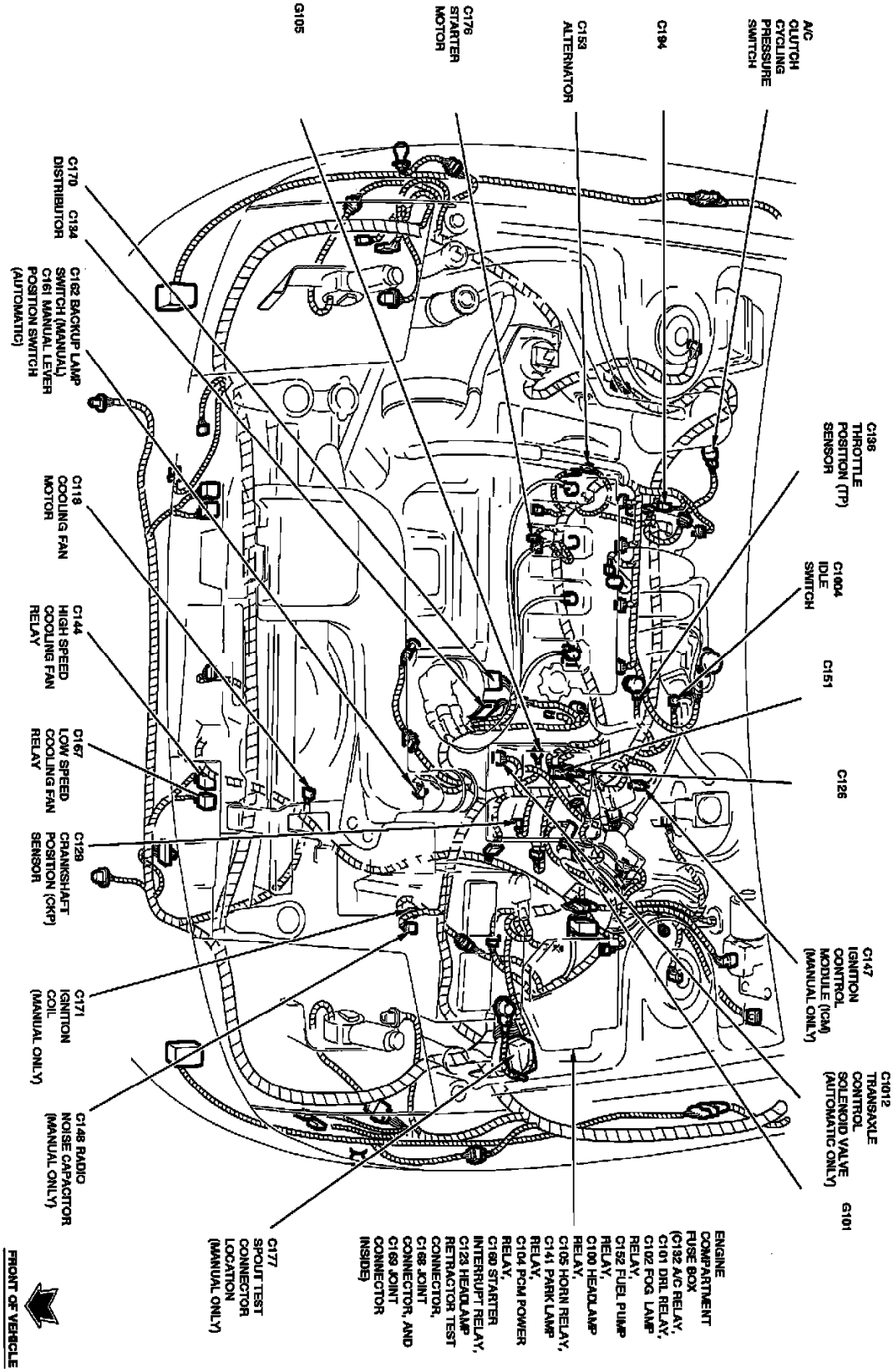

Component Locations

Part 3 of 3

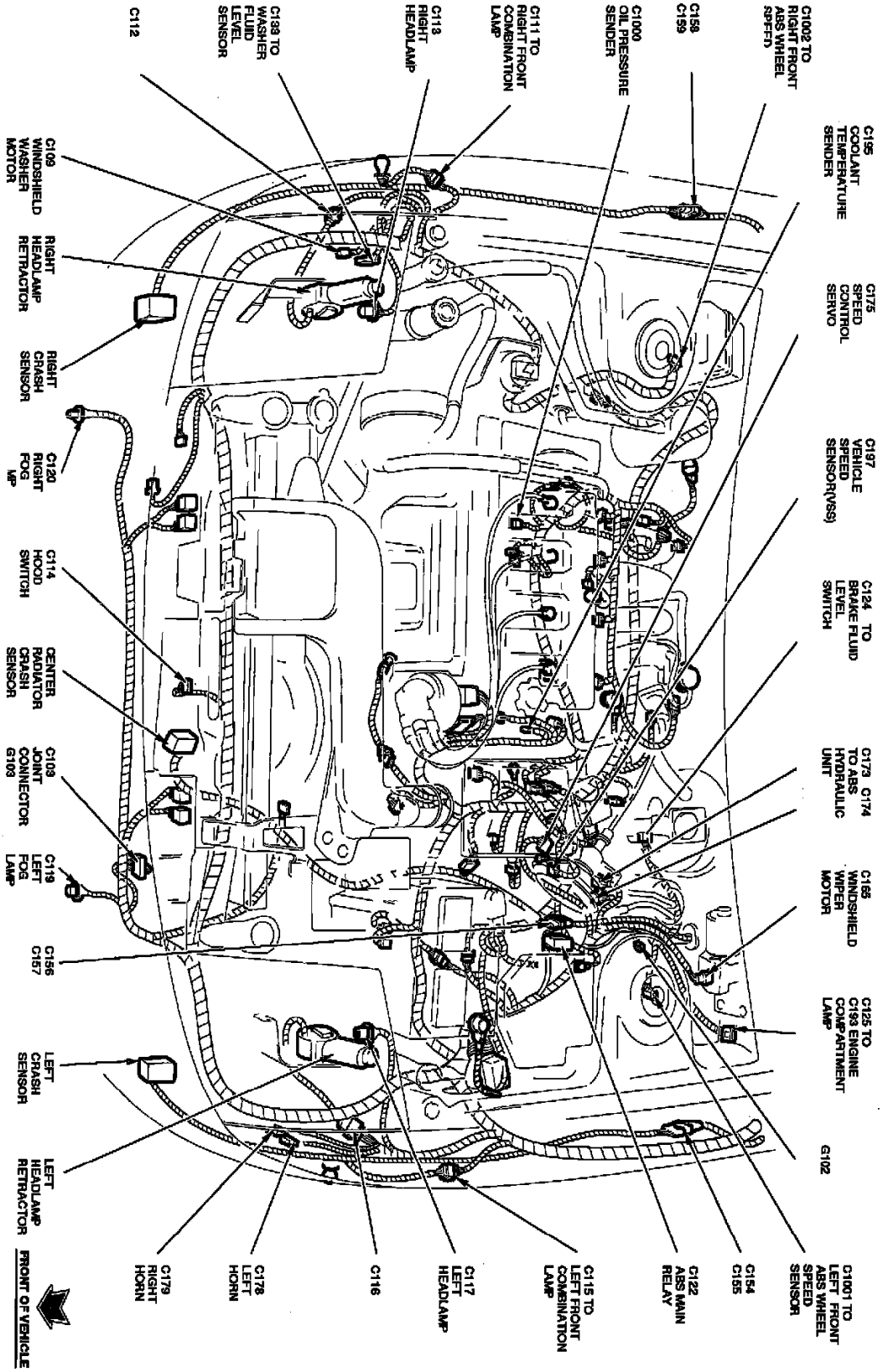

Component Locations

Part 1 of 2

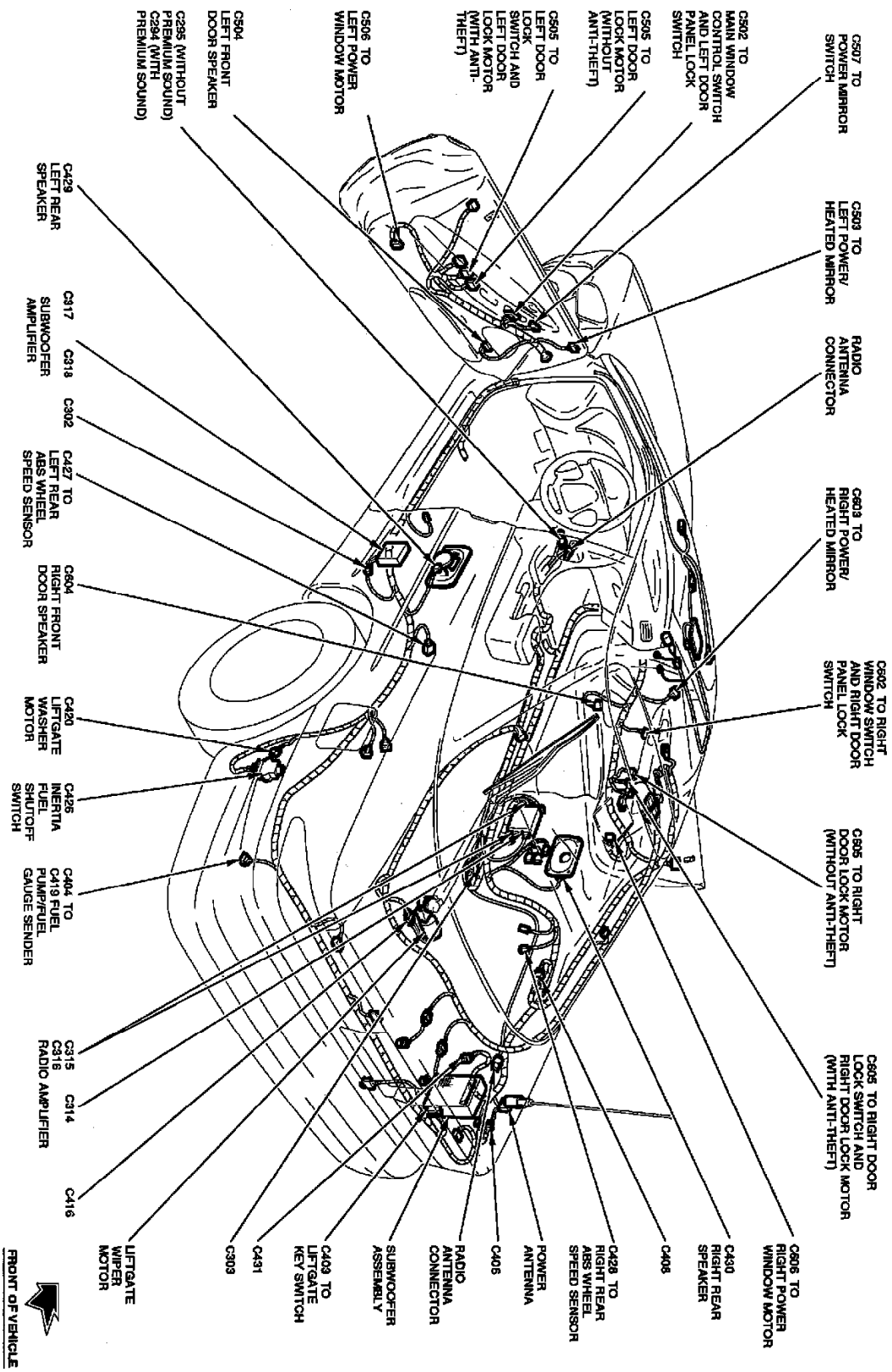

Component Locations

Part 2 of 2

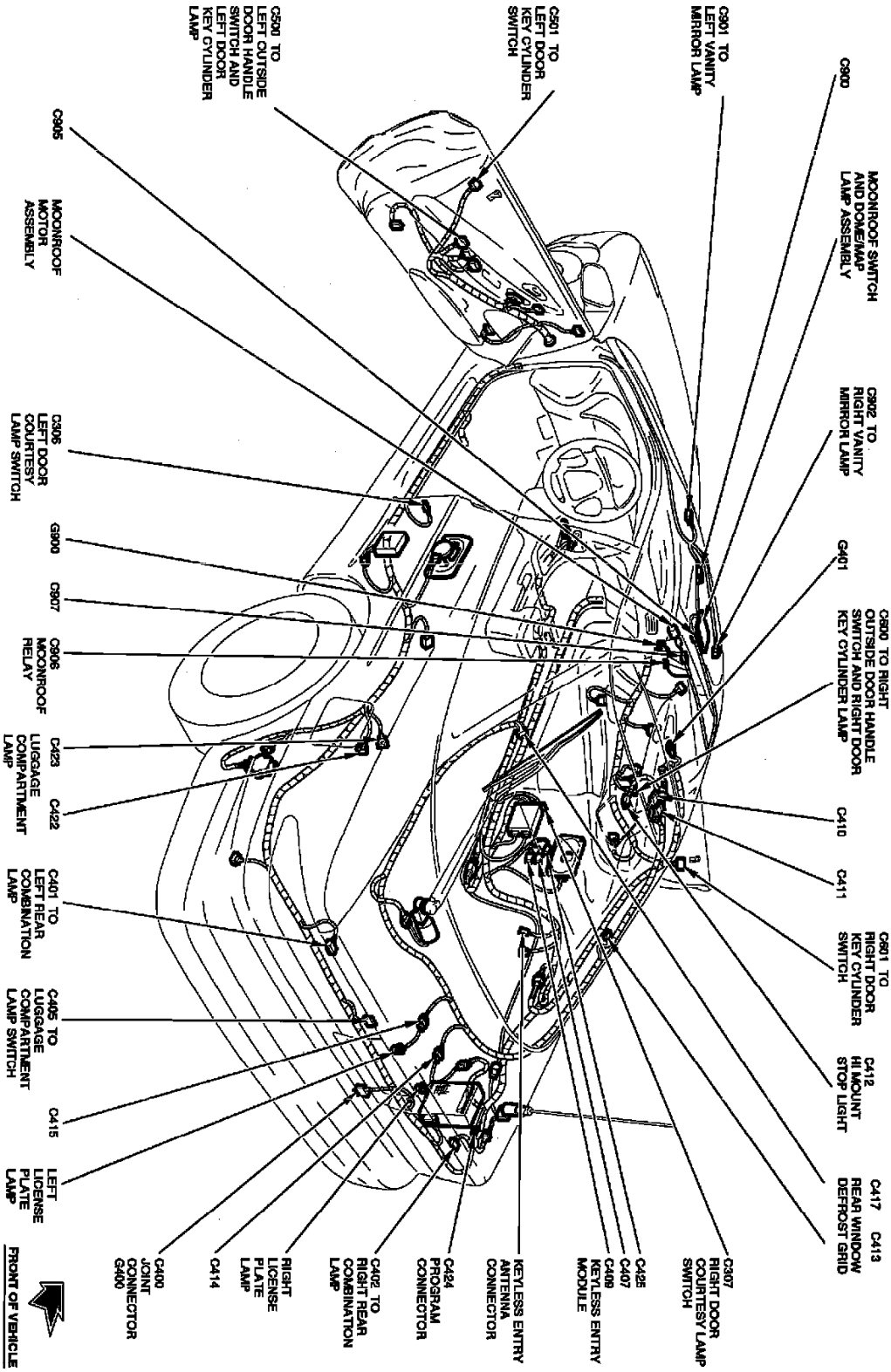

Component Locations

Seat Assemblies View

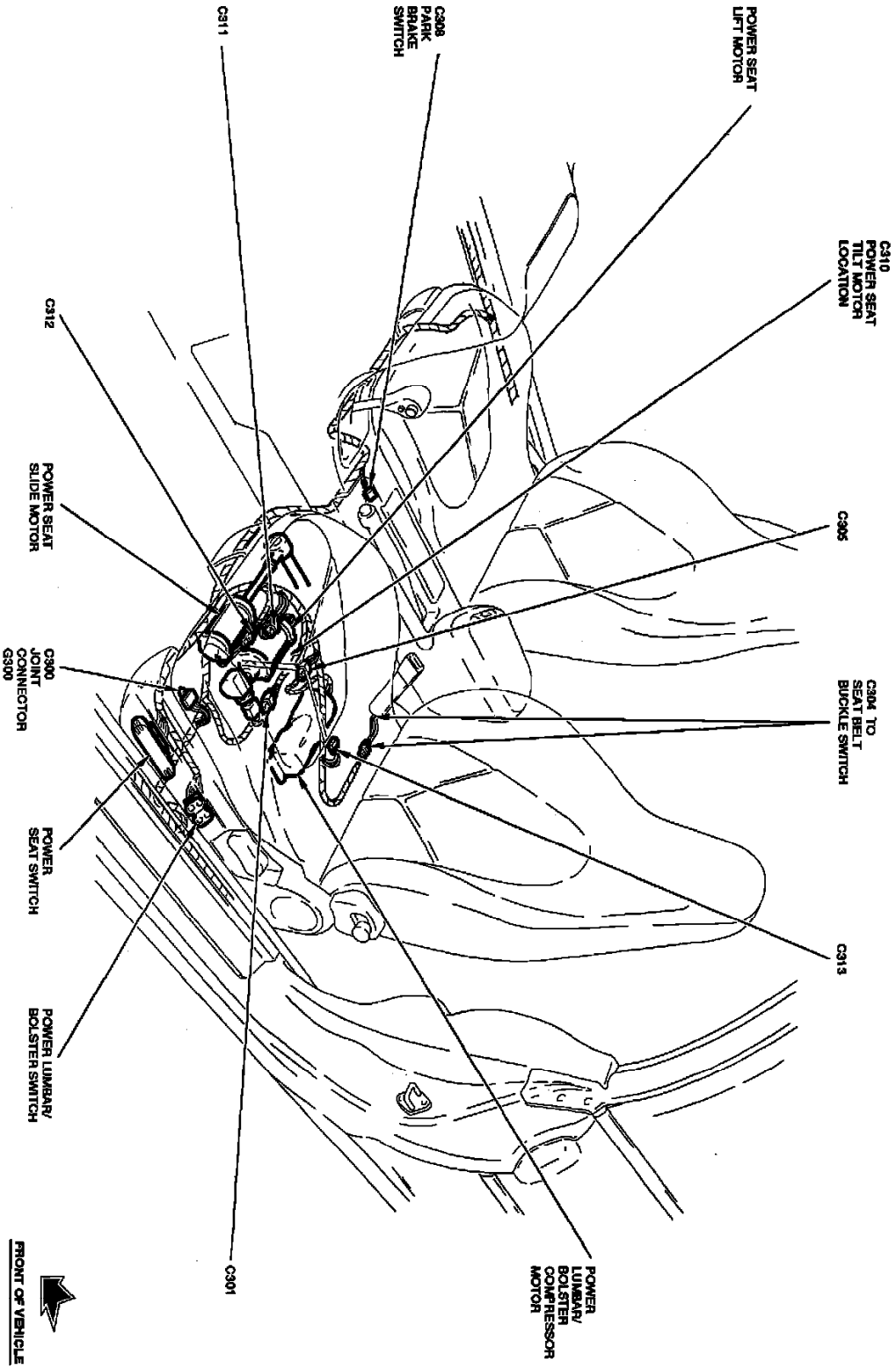

Component Locations

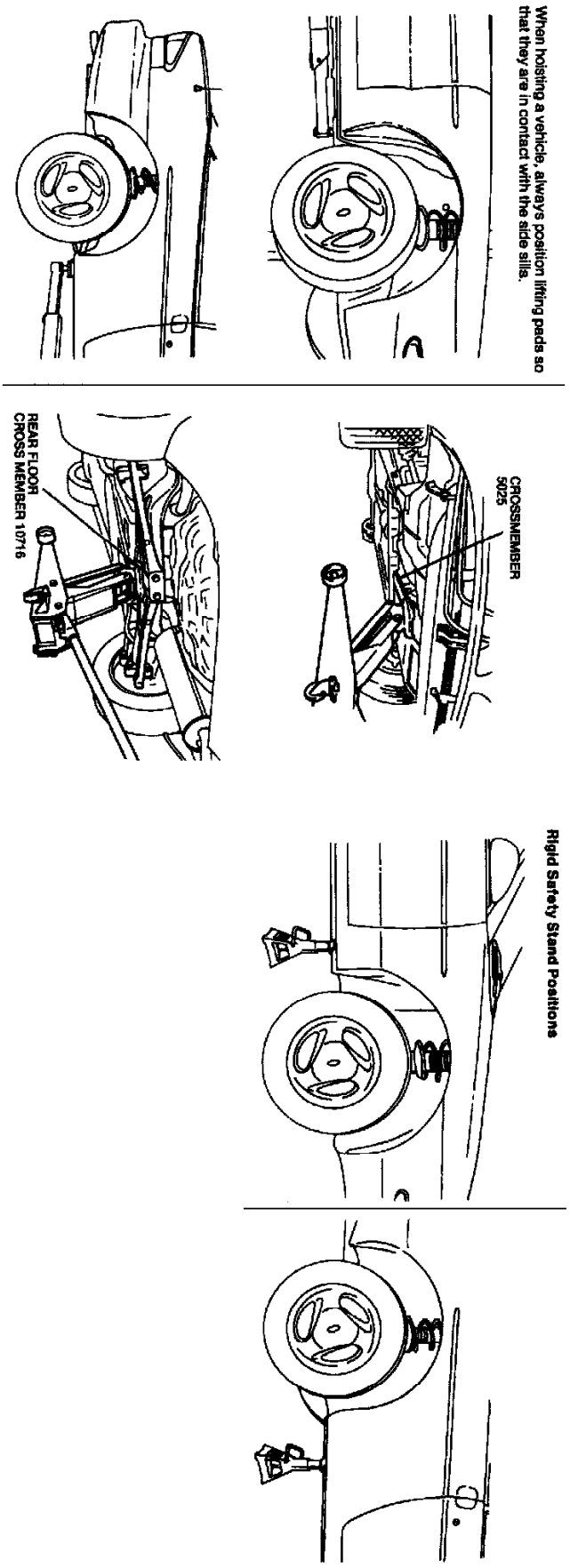

Vehicle Lift Points

C100 - C150

Connector Number -- Location

C100	In engine compartment fuse box, on headlamp relay
C101	In engine compartment fuse box, on DRL relay
C102	In engine compartment fuse box, on fog lamp relay
C103	**Joint Connector** LH front of vehicle, near left fog lamp, on G103
C104	In engine compartment fuse box, on PCM power relay

C105 In engine compartment fuse box, on horn relay
C106 **Joint Connector** LH side of engine, on G106
C107 RH rear of engine compartment, on side of shock tower
C108 RH front of vehicle, on condenser fan motor
C109 RH front of engine compartment, on windshield washer motor
C111 Inside front of RH front fender, to right front combination lamp
C112 RH front of engine compartment, near right headlamp retractor
C113 RH front of engine compartment. on right headlamp
C114 Center front of vehicle, on hood switch
C115 Inside front of LH front fender, to left front combination lamp
C116 LH front of engine compartment, near left headlamp retractor
C117 LH front of engine compartment, on left headlamp
C118 Center front of engine compartment, on cooling fan motor
C119 Lower LH front of vehicle, on left fog lamp
C120 Lower RH front of vehicle, on right fog lamp
C121 RH front of engine compartment, on A/C high pressure switch
C122 LH side of engine compartment, on ABS main relay
C123 Headlamp Retractor Test Connector LH side of engine compartment, in engine compartment fuse box
C124 LH rear of engine compartment, to brake fluid level switch
C125 LH rear corner of engine compartment
C126 Top LH side of engine
C127 LH front of engine, to left heated oxygen sensor (HO2S)
C129 Lower LH side of engine, on crankshaft position (CKP) sensor
C130 Lower RH rear of engine, to right heated oxygen sensor (HO2S)
C131 Top rear of transaxle, on pulse signal generator
C132 In engine compartment fuse box, on A/C relay
C133 RH front of engine compartment, on washer fluid level sensor
C134 Top LH front of engine, on distributor
C135 Data Link Connector (DLC) (Automatic) LH side of engine compartment, on fender apron
C135 **Data Link Connector (DLC) (Manual)** LH side of engine compartment, on fender apron
C136 Top LH rear of engine, on throttle position (TP) sensor
C138 Rear of engine, to knock sensor (KS)
C139 Center rear of engine, near EGR valve position sensor
C140 Top LH side of engine, on engine coolant temperature sensor (cooling fan)
C141 In engine compartment fuse box, on park lamp relay
C143 Top LH side of engine, on engine coolant temperature (ECT) sensor
C144 LH front of vehicle, on high speed cooling fan relay
C145 RH front of vehicle, on low speed blower motor relay
C147 LH rear of engine compartment, on ignition control module (ICM)
C148 LH front of engine compartment, on radio noise capacitor
C149 LH side of engine compartment, near battery
C150 Top LH rear of engine compartment, on mass air flow (MAF) sensor

C151 - C200

Connector Number -- Location

C151 Top LH side of engine
C152 In engine compartment fuse box, on fuel pump relay
C153 RH rear of engine, on alternator
C154 Inside rear of LH front fender, to left crash sensor
C155 Inside rear of LH front fender, to left crash sensor
C156 LH side of engine compartment, to center radiator sensor
C157 LH side of engine compartment, to center radiator sensor
C158 Inside rear of RH front fender, to right crash sensor
C159 Inside rear of RH front fender, to right crash sensor
C160 In engine compartment fuse box, on starter interrupt relay
C161 Lower front of transaxle, on manual lever position switch
C162 Lower front of transaxle, on backup lamp switch
C163 LH side of engine compartment, on low speed condenser fan relay
C164 LH side of engine compartment. on high speed condenser fan relay
C165 Top LH side of safety wall, on windshield wiper motor
C166 RH front of vehicle, on rear window defrost relay
C167 LH front of vehicle, on low speed cooling fan relay
C168 **Joint Connector** LH side of engine compartment, in engine compartment fuse box
C169 **Joint Connector** LH side of engine compartment, in engine compartment fuse box
C170 Top LH front of engine, on distributor
C171 LH front of engine compartment, on ignition coil
C173 LH rear of engine compartment, to ABS hydraulic unit
C174 LH rear of engine compartment, to ABS hydraulic unit

C175 LH rear of engine compartment, on speed control servo
C176 Lower rear of engine, on starter motor
C177 **SPOUT Check Connector** LH side of engine compartment, near data link connectors (DLC) C135 and C191
C178 Inside front of LH front fender, on left horn
C179 Inside front of LH front fender, on right horn
C180 LH side of engine compartment, behind battery
C181 Top RH rear of engine, on fuel injector #1
C182 Top RH center rear of engine, on fuel injector #2
C183 Top LH center rear of engine, on fuel injector #3
C184 Top LH rear of engine, on fuel injector #4
C185 RH rear of engine compartment, on canister purge (CANP) solenoid valve
C186 RH rear of engine compartment, on EGR solenoid valve
C187 RH rear of engine compartment, on FPRC solenoid valve
C188 Center rear of engine compartment, on idle air control (IAC) solenoid valve
C189 LH front of engine, to heated oxygen sensor (HO2S)
C190 **Self Test Input (STI) Connector** LH side of engine compartment, on fender apron
C191 **Data Link Connector (DLC)** LH side of engine compartment, on fender apron
C192 LH side of engine compartment, on intake air temperature (IAT) sensor
C193 Underside of engine compartment hood, on engine compartment lamp
C194 RH rear of engine compartment, to clutch cycling pressure switch
C195 Top LH side of engine, on coolant temperature sender
C196 RH front of engine compartment, on power steering pressure switch
C197 Lower rear of transaxle, on vehicle speed sensor (VSS)
C198 Top rear of transaxle, to park/neutral position switch
C199 RH rear of engine compartment, on EGR temperature sensor
C200 Behind LH side of I/P, near interior fuse panel

C201 - C300

Connector Number -- Location

C201 Behind LH side of I/P, on rear of interior fuse panel
C202 **Joint Connector** Behind top LH side of I/P, on G202
C203 **Joint Connector** Behind LH side of I/P, on G203
C204 Behind LH side of I/P, on central processing unit (CPU)
C205 Behind LH side of I/P, on headlight retractor control module
C206 **(Front Harness Side)** Behind LH side of I/P
C206 **(I/P Harness Side)** Behind LH side of I/P
C207 Top of steering column, on combination switch
C208 Behind top LH side of I/P
C209 Behind LH side of I/P, on air bag diagnostic module
C210 Behind LH side of I/P, on air bag diagnostic module
C211 **(With CD Player)** Behind center of I/P, on radio/CD player
C211 **(Without CD Player)** Behind center of I/P, on radio
C212 Behind center of I/P, on radio
C213 Behind LH side of I/P, on central processing unit (CPU) and interior fuse panel
C214 Behind LH side of I/P, on rear of interior fuse panel
C215 Behind LH side of I/P, on front of interior fuse panel
C216 Behind LH side of I/P, on front of interior fuse panel
C217 Behind LH side of I/P, on front of interior fuse panel
C218 Top of steering column, on ignition switch
C219 Top of steering column, on ignition key reminder switch (ignition)
C220 Below center of center console, near shift lock actuator
C221 Behind LH side of I/P, on brake on/off switch
C222 Behind LH side of I/P, on ABS control module
C223 Behind LH side of I/P, on ABS control module
C224 Behind LH side of I/P, on top of interior fuse panel
C225 Top of steering column, on combination switch
C226 Top of steering column, to clockspring assembly
C227 Behind LH side of I/P, on speed control module
C228 Behind LH side of I/P, on speed control module
C229 **ABS Test Connector** Behind LH side of I/P, near ABS control module
C230 Behind LH side of I/P, on clutch pedal position (CPP) switch
C231 **(With A/C)** Behind center of I/P, on A/C-heater control assembly
C231 **(Without A/C)** Behind center of I/P, on heater control assembly
C232 Behind center of I/P, on liftgate washer switch
C233 Below center of center console
C234 Joint Connector Behind LH side of I/P, taped to I/P harness
C235 Behind LH side of I/P, on instrument panel dimming module
C236 Behind center of I/P, on liftgate wiper switch

C237 Behind center of I/P, on fog lamp switch
C238 Behind center of I/P, on rear window defrost switch
C239 Behind RH side of I/P, on glove box lamp switch
C240 Behind top LH side of I/P, on instrument cluster
C241 Behind top LH side of I/P, on instrument cluster
C242 Under front of center console, on overdrive off switch
C243 Behind LH side of I/P, on flasher module
C244 Behind LH side of I/P, on daytime running lamps (DRL) control module
C245 Joint Connector Behind top LH side of I/P, taped to front harness
C246 **(Automatic)** Below center front of center console, on powertrain control module (PCM)
C247 **(Automatic)** Below center front of center console, on powertrain control module (PCM)
C248 **(Automatic)** Below center front of center console, on powertrain control module (PCM)
C249 **(Emission Harness Side)** Behind center of I/P
C249 **(I/P Harness Side)** Behind center of I/P
C25O **Joint Connector** Below center front of center console, near powertrain control module (PCM)
C251 Under LH side of I/P, on left footwell courtesy lamp
C252 Under RH side of I/P, on right footwell courtesy lamp
C253 Behind lower center of I/P, on graphic equalizer
C254 Behind lower center of I/P, on graphic equalizer
C255 **(Emission Harness Side)** Behind center of I/P
C255 **(I/P Harness Side)** Behind center of I/P
C256 Below center front of center console, on powertrain control module (PCM)
C257 Top of steering column, to clockspring assembly
C258 Below center of I/P, on transaxle control module (TCM)
C259 Below center of I/P, on transaxle control module (TCM)
C260 Behind center of I/P, to safing sensor
C261 Behind center of I/P, to safing sensor
C262 Joint Connector Behind top LH side of I/P, taped to air bag harness
C263 In center of steering wheel, to steering column air bag and horn switches
C265 **(With A/C)** Behind RH side of I/P, on blower assembly
C265 **(Without A/C)** Behind RH side of I/P, on blower assembly
C266 Behind LH side of I/P, near interior fuse panel
C267 Inside LH kick panel
C268 Inside RH kick panel
C269 **Joint Connector** Behind LH side of I/P, taped to I/P harness
C270 **Joint Connector** Behind LH side of I/P, taped to I/P harness
C272 Behind center of I/P, on A/C-heater control assembly illumination
C273 Behind RH side of I/P, on glove box lamp
C280 Under center console, on cigar lighter illumination
C281 Under center console, on ashtray illumination
C282 Under center of center console, on cigar lighter
C283 Under center of center console, on cigar lighter
C284 Below center of center console, to ignition key reminder switch (shift lock override)
C285 Behind center of I/P, on headlamp retractor switch
C286 In steering wheel, to speed control switch assembly
C287 **(With A/C)** Behind center of I/P, on A/C-heater control assembly
C287 **(Without A/C)** Behind center of I/P, on heater control assembly
C288 Behind RH side of I/P, on barometric pressure (BARO) sensor
C290 Top of RH kick panel, on power door lock relay
C291 **(With CD Player)** Behind center of I/P, on radio/CD player
C291 **(Without CD Player)** Behind center of I/P, on radio
C292 **(With CD Player)** Behind center of I/P, on radio/0D player
C292 **(Without CD Player)** Behind center of I/P, on radio
C293 Behind LH side of I/P, on starter clutch pedal position (SCPP) switch
C294 **(Audio System Feeder Harness #1 Side)** Behind center of I/P
C294 **(Audio System Feeder Harness #2 Side)** Behind center of I/P
C295 **(Audio System Feeder Harness #1 Side)** Behind center of I/P
C295 **(Audio System Feeder Harness #2 Side)** Behind center of I/P
C296 Behind RH side of I/P, on blower motor
C297 Behind RH side of I/P, on blower motor resistor
C298 Behind RH side of I/P, on high speed blower motor relay
C299 Below center of center console, to park range switch
C300 **Joint Connector** Below LH front seat, on G300

C301 - C606

Connector Number -- Location

C301 Below center of LH front seat
C302 In lower front of LH quarter panel, to C317 and C318 subwoofer amplifier

C303 Below RH side of rear seat, near quarter panel trim
C304 Below rear of LH front seat, to seat belt buckle switch
C305 Under center of LH front seat, to power lumbar/bolster switch and power lumbar/bolster compressor motor
C306 In rear of LH door jamb, on left door courtesy lamp switch
C307 In rear of RH door jamb, on right door courtesy lamp switch
C308 Below rear of center console, on park brake switch
C310 Under center of LH front seat, to power seat tilt motor
C311 Under center front of LH front seat, to power seat lift motor
C312 Under center front of LH front seat, to power seat slide motor
C313 Under rear of LH front seat
C314 In front of RH quarter panel, on radio amplifier
C315 In front of RH quarter panel, on radio amplifier
C316 In front of RH quarter panel, on radio amplifier
C317 In front of LH quarter panel, on subwoofer amplifier
C318 In front of LH quarter panel, on subwoofer amplifier
C400 **Joint Connector** Lower center rear of luggage compartment, on G400
C401 LH rear of luggage compartment, to left rear combination lamp
C402 RH rear of luggage compartment, to right rear combination lamp
C403 RH rear of luggage compartment, near liftgate key switch
C404 Lower LH rear corner of luggage compartment
C405 Center rear of luggage compartment, near luggage compartment lamp switch
C406 Top RH rear corner of luggage compartment, near power antenna
C407 In front of RH quarter panel, on keyless entry module
C408 RH front of luggage compartment, top of wheel well
C409 In front of RH quarter panel, on keyless entry module
C410 In top center front of liftgate, at top of rear window
C411 In top center front of liftgate, at top of rear window
C412 In top center front of liftgate, on hi mount stop lamp
C413 RH side of rear window, on rear window defrost grid
C414 In center rear of liftgate, near left license plate light
C415 In center rear of liftgate, near right license plate light
C416 LH rear of liftgate, near liftgate wiper motor
C417 LH side of rear window, on rear window defrost grid
C419 Below rear of car, on fuel pump/fuel gauge sender
C420 Lower LH side of luggage compartment, on liftgate washer motor
C422 LH side of luggage compartment, on luggage compartment lamp
C423 LH side of luggage compartment, on luggage compartment lamp
C424 **Program Connector** In RH rear of luggage compartment
C425 In front of RH quarter panel, on keyless entry module
C426 Lower LH side of luggage compartment, on inertia fuel shutoff switch
C427 Top of LH rear wheel well, to left rear ABS wheel speed sensor
C428 Top of RH rear wheel well, to right rear ABS wheel speed sensor
C429 In front of LH quarter panel, on left rear speaker
C430 In front of RH quarter panel, on right rear speaker
C431 RH rear of luggage compartment, near subwoofer assembly
C500 In rear of LH door, to left door key cylinder lamp and left outside door handle switch
C501 In top rear of LH door, to left door key cylinder switch
C502 In center of LH door, to main window control switch and left door panel lock switch
C503 In top front of LH door, to left power/heated mirror
C504 In lower front of LH door, on left front door speaker
C505 **(With Anti-theft)** In rear of LH door, to left door lock motor and left door lock link switch
C505 **(Without Anti-theft)** In rear of LH door, to left door lock motor
C506 In lower rear of LH door, to left power window motor
C507 In center front of LH door, near power mirror switch
C600 In rear of RH door, to right door key cylinder lamp and right outside door handle switch
C601 In top rear of RH door, to right door key cylinder switch
C602 In center of RH door, to right window switch and right door panel lock switch
C603 In top front of RH door, to right power/heated mirror
C604 In lower front of RH door, on right front door speaker
C605 **(With Anti-theft)** In rear of RH door, to right door lock motor and right door lock switch
C605 **(Without Anti-theft)** In rear of RH door, to right door lock motor
C606 In lower rear of RH door, to right power window motor

C900 - C2000

Connector Number -- Location

C900 **(With Moonroof)** Center of windshield header, near dome/map lamp assembly and moonroof switch
C900 **(Without Moonroof)** Center of windshield header, near dome/map lamp assembly
C901 LH side of windshield header, near left vanity mirror lamp

C902	RH side of windshield header, near right vanity mirror lamp
C905	Center of windshield header, near moonroof switch
C906	Center of roof, on moonroof relay
C907	Center of roof, to moonroof motor assembly
C1000	Lower RH rear of engine, on oil pressure sender
C1001	Rear of LH front wheel well, to left front ABS wheel speed sensor
C1002	Rear of RH front wheel well, to right front ABS wheel speed sensor
C1003	RH front of engine, to A/C clutch thermal protection switch
C1004	Center rear of engine compartment, on idle switch
C1006	Center rear of engine compartment, on EGR solenoid valve (vent)
C1007	Center rear of engine compartment, on EGR solenoid valve (vacuum)
C1008	Center rear of engine compartment, on VRIS solenoid valve #1
C1009	Center rear of engine compartment, on VRIS solenoid valve #2
C1010	Top LH side of engine, to left fuel injectors
C1011	Top LH side of engine, to right fuel injectors
C1012	Top of transaxle, on transaxle control solenoid valve
C1013	RH front of engine, to A/C clutch field coil
C2000	Behind LH side of I/P, on interior fuse panel and anti-theft control unit

How To Use The Connector to Harness Cross Reference List

HOW TO IDENTIFY A BASIC HARNESS NUMBER BY USING A "C" NUMBER

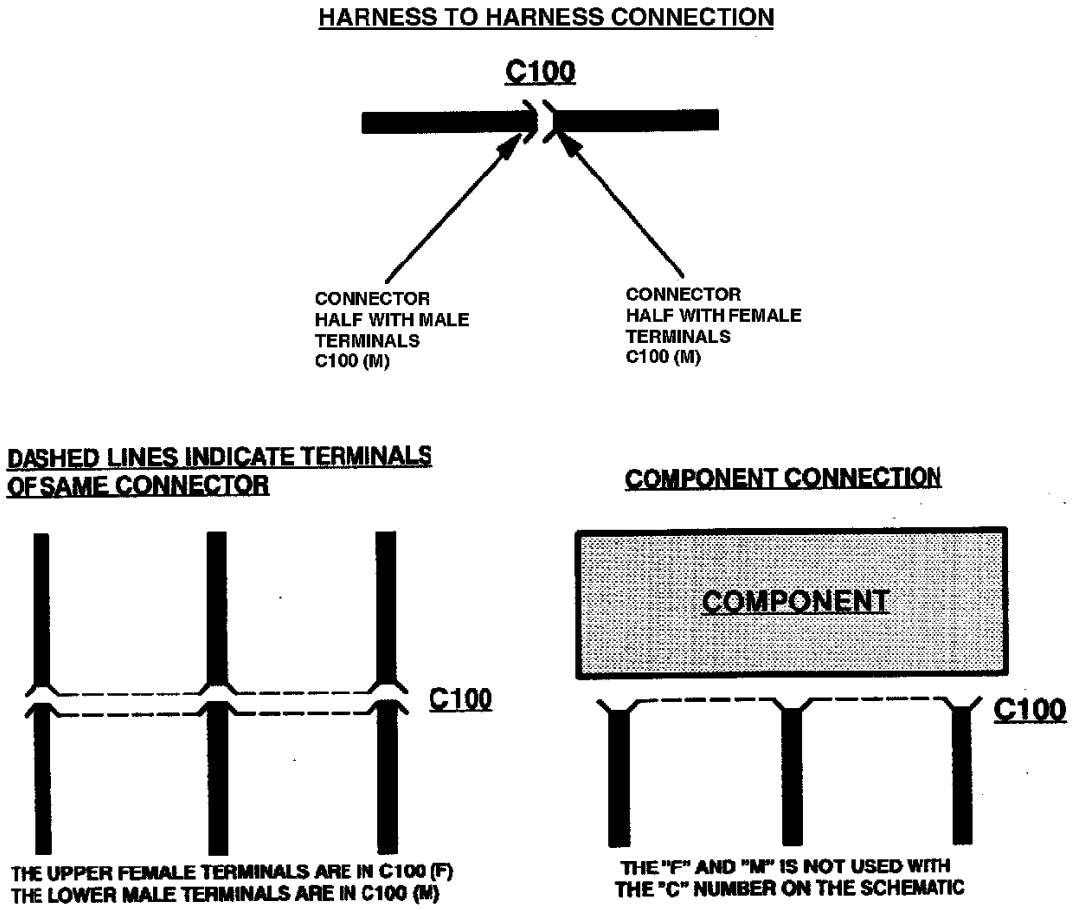

Connector Identification

Understand these symbols before you use the following listing.

How to identify the basic harness part number:

> Find the connector "C" number in the diagrams, then locate the "C" number in the following listing and read the basic harness part number which becomes useful if ordering parts.

C100 - C200

Connector Number -- Wire Assembly

C100	67010
C101	67010
C102	67010

1993 Ford Probe L4-121 2.0L DOHC VIN A MFI

C103	67010
C104	67010
C105	67010
C106	67020
C107 (F)	67020
C107 (M)	67010
C108	67010
C109	67010
C111	67010
C112	67010
C113	67010
C114	67010
C115	67010
C116	67010
C117	67010
C118	67010
C119	67010
C120	67010
C121	67010
C122	67010
C123	67010
C124	67010
C125 (F)	67010
C125 (M)	51301
C126 (F)	67070
C126 (M)	67020
C127	67070
C129	67020
C130	67070
C131	67070
C132	67010
C133	67010
C134	67020
C135	67020
C136	67020
C138	67020
C139	67070
C140	67020
C141	67010
C143	67020
C144	67010
C145	67010
C147	67020
C148	67020
C149 (F)	67010
C149 (M)	67020
C150	67020
C151 (F)	67070
C151 (M)	67020
C152	67010
C153	67070
C154	67230
C155	67230
C156	67230
C157	67230
C158	67230
C159	67230
C160	67010
C161	67020
C162	67020
C163	67010
C164	67010
C165	67010
C166	67010
C167	67010
C168	67010
C169	67010
C170	67020
C171	67020
C173	67010

C174	67010
C175	67010
C176	67070
C177	67020
C178	67010
C179	67010
C180 (F)	67010
C180 (M)	67070
C181	67070
C182	67070
C183	67070
C184	67070
C185	67070
C186	67070
C187	67070
C188	67070
C189	67020
C190	67020
C191	67020
C192	67020
C193	67301
C194	67020
C195	67020
C196	67010
C197	67070
C198	67070
C199	67070
C200 (F)	67050
C200 (M)	67030

C201 - C300

Connector Number -- Wire Assembly

C201	67050
C202	67230
C203	67030
C204	67050
C205	67030
C206 (F)	67010
C206 (M)	67030
C207	67010
C208 (F)	67010
C208 (M)	67230
C209	67230
C210	67230
C211	67030
C212	PIA
C213	PA
C214	67010
C215	67030
C216	67010
C217	67100
C218	67010
C219	67010
C220 (F)	PIA
C220 (M)	67030
C221	67010
C222	67010
C223	67010
C224 (F)	67010
C224 (M)	67050
C225	67010
C226	67010
C227	67010
C228	67010
C229	67010
C230	67010
C231	67030
C232	67030

C233 (F)	67030
C233 (M)	PIA
C234	67030
C235	67030
C236	67030
C237	67030
C238	67030
C239	67030
C240	67030
C241	67030
C242	67030
C243	67030
C244	67030
C245	67010
C246	67020
C247	67020
C248	67020
C249 (F)	67020
C249 (M)	67030
C250	67020
C251	67030
C252	67030
C253	PIA
C254	67030
C255 (F)	67020
C255 (M)	67030
C256	67020
C257	67230
C258	67020
C259	67020
C260	67230
C261	67230
C262	67230
C263	PIA
C265 (F)	67030
C266 (M)	67050
C266 (F)	67100
C267 (F)	67050
C267 (M)	67190
C268 (F)	67050
C268 (M)	67200
C269	67030
C270	67030
C272	67030
C273	67030
C280	PIA
C281	PIA
C282	PIA
C283	PIA
C284	67030
C285	6700
C286	PIA
C287	67030
C288	67020
C290	67050
C291	PIA
C292	PIA
C293	67010
C294	PIA
C295	PIA
C296	PIA
C297	PIA
C298	PIA
C299	PIA
C300	67050

C301 - C606

Connector Number -- Wire Assembly

C301 (F)	57155
C301 (M)	67050
C302	67050
C303 (F)	PIA
C303 (M)	67050
C304	57155
C305	57155
C306	67050
C307	67050
C308	67050
C310	67155
C311	67155
C312	67155
C313	67155
C314	PIA
C315	PA
C316	PIA
C400	67050
C401 (M)	67050
C402 (M)	67050
C403	67050
C404 (F)	67050
C404 (M)	PIA
C405	67050
C406	67050
C407	67050
C408 (F)	6706Y
C408 (M)	67050
C409	67050
C410 (F)	67060
C410 (M)	6706Y
C411 (F)	67060
C411 (M)	6706Y
C412	67060
C413	67060
C414	67060
C415	67060
C416	67060
C417	67060
C419	67071
C420	67050
C422	67050
C423	67050
C424	67050
C425	67050
C426	67050
C427	67050
C428	67050
C429	67050
C430	67050
C431	67050
C500	67190
C501	67190
C502	67190
C503	67190
C504	67190
C505	67190
C506	67190
C507	67190
C600	67200
C601	67200
C602	67200
C603	67200
C604	67200
C605	67200
C606	67200

C2001 - C2010

Connector Number -- Wire Assembly

C900	97100
C901	97100
C902	97100
C905	PIA
C906	PIA
C907	PIA
C1000	67070
C1001	67010
C1002	67010
C1003	67010
C1004	67020
C1006	67070
C1007	67070
C1008	67070
C1009	67070
C1010	67020
C1011	67020
C1012	67020
C2000	PIA

Ground Locations

Ground Number -- Location

G100	LH side of engine compartment, on fender apron
G101	LH side of engine
G102	LH rear of engine compartment
G103	LH front of vehicle, near left fog lamp
G104 (Automatic)	LH side of engine
G104 (Manual)	LH rear of engine compartment
G105	LH side of engine
G106	LH side of engine
G107	LH side of engine compartment, on fender apron
G200	Behind LH center of I/P
G201	Behind top center of I/P
G202	Behind top LH side of I/P
G203	Behind LH side of I/P, left of steering column
G300	Below LH front seat
G400	Lower center rear of luggage compartment
G401	Center rear of roof, near liftgate grommet
G900	Center of roof, on moonroof motor assembly

S100 - S150

Splice Number -- Location

S100	Front harness, LH rear of engine compartment
S101	Front harness, near Take Out (T/O) to left headlamp retractor
S102	Front harness, near Take Out (T/O) to left headlamp retractor
S103	Front harness, near safety wall grommet
S105	Front harness, LH rear of engine compartment
S106	Front harness, LH rear of engine compartment
5107	Front harness
S108	Front harness
S109	Front harness, LH rear of engine compartment
S110	Engine harness, near Take Out (T/O) to G104
S115	Engine harness, near Take Out (T/O) to G104
S117	Front harness, near Take Out (T/O) to hood switch
S118	Front harness, near Take Out (T/O) to G103
S119	Front harness, near Take Out (T/O) to right headlamp retractor
S121	Front harness, near Take Out (T/O) to hood switch
S122	Front harness, near safety wall grommet
S123 (Automatic)	Emission harness, near Take Out (T/O) to G106
S123 (Manual)	Emission harness, near Take Out (T/O) to G105
S125	Emission harness, near Take Out (T/O) to data link connector (DLC) C135
S125	Emission harness, near Take Out (T/O) to G106
S126 (Automatic)	Emission harness, near Take Out (T/O) to transaxle control solenoid valve
S126 (Manual)	Emission harness, near Take Out (T/O) to mass air flow (MAF) sensor

S127	Front harness, near Take Out (T/O) to ignition switch
S130	Front harness, near Take Out (T/O) to hood switch
S131	Emission harness, near Take Out (T/O) to data link connector (DLC) C135
S133	Emission harness, near Take Out (T/O) to ignition control module (ICM)
S136	Emission harness, near Take Out (T/O) to ignition coil
S137	Emission harness, near Take Out (T/O) to data link connector (DLC) C135
S138	Emission harness, near Take Out (T/O) to G106
S140	Front harness, near Take Out (T/O) to hood switch
S141	Front harness, in engine compartment fuse box
S142	Front harness, LH front of engine compartment
S143	Front harness, LH rear of engine compartment
S146	Front harness, near Take Out (T/O) to left horn
S147	Front harness, LH rear of engine compartment
S148	Front harness, LH rear of engine compartment
S149	Emission harness, in Take Out (T/O) to ignition coil
S150 (Automatic)	Emission harness, near Take Out (T/O) to manual lever position switch
S150 (Manual)	Emission harness, near Take Out (T/O) to G106

S151 - S200

Splice Number -- Location

S151	Front harness, LH rear of engine compartment
S152	Front harness, near safety wall grommet
S153	Front harness, near safety wall grommet
S154	Front harness, LH rear of engine compartment
S155	Front harness, LH rear of engine compartment
S156	Front harness, LH rear of engine compartment
S157 (Automatic)	Front harness, near Take Out (T/O) to G103
S157 (Manual)	Front harness, LH rear of engine compartment
S158	Front harness, near Take Out (T/O) to G103
S159	Emission harness, near Take Out (T/O) to G105
S160	Emission harness, near Take Out (T/O) to manual lever position switch
S161	Emission harness, near Take Out (T/O) to G105
S162	Front harness, near Take Out (T/O) to left and right horns
S163	Emission harness, near Take Out (T/O) to G105
S164	Engine harness, near Take Out (T/O) to alternator
S165	Engine harness, near Take Out (T/O) to fuel injector #1
S166	Front harness, LH rear of engine compartment
S167	Front harness, LH rear of engine compartment, near safety wall grommet
S168	Front harness, LH rear of engine compartment, near safety wall grommet
S169	Front harness, LH rear of engine compartment
S170	Front harness, near safety wall grommet
S171	Front harness, near Take Out (T/O) to cooling fan motor
S172	Front harness, near Take Out (T/O) to G103
S173	Front harness, LH rear of engine compartment
S174	Front harness, LH rear of engine compartment
S175	Front harness, LH rear of engine compartment
S176	Front harness, near Take Out (T/O) to joint connector C245
S178	Front harness, LH rear of engine compartment
S179	Front harness, near Take Out (T/O) to G102
S180	Emission harness, near Take Out (T/O) to C107
S181	Engine harness, near Take Out (T/O) to starter motor
S182	Engine harness, near Take Out (T/O) to power steering pressure switch
S183	Emission harness, near Take Out (T/O) to C126
S184	Front harness, near Take Out (T/O) to speed control servo
S185	Front harness, near Take Out (T/O) to G102
S186	Front harness
S187	Emission harness, near Take Out (T/O) to transaxle control solenoid valve
S188	Front harness, near Take Out (T/O) to cooling fan motor
S189	Front harness, near Take Out (T/O) to G102
S190	Emission harness, near Take Out (T/O) to distributor
S191 (Automatic)	Emission harness, near Take Out (T/O) to C151
S191 (Manual)	Emission harness, near Take Out (T/O) to left fuel injectors connector C1010
S192 (Automatic)	Emission harness, near Take Out (T/O) to G106
S192 (Manual)	Emission harness, near Take Out (T/O) to G105
S193 (Automatic)	Emission harness, near Take Out (T/O) to manual lever position switch
S193 (Manual)	Emission harness, near Take Out (T/O) to backup lamp switch
S194	Emission harness, near Take Out (T/O) to C151
S195	Engine harness, near Take Out (T/O) to EGR valve position sensor

S200	I/P harness, in Take Out (T/O) to radio connector C211

S201 - S250

Splice Number -- Location

S201	I/P harness, behind center of I/P, near RH edge of harness channel
S202	Front harness, near Take Out (T/O) to ignition switch
S203	Front harness, near Take Out (T/O) to G201
S206	I/P harness, in Take Out (T/O) to instrument cluster connector C240
S207	I/P harness, near Take Out (T/O) to C206
S208	I/P harness, behind center of I/P, near RH edge of harness channel
S209	I/P harness, near Take Out (T/O) to C255 and C249
S211 (Automatic)	Front harness, near Take Out (T/O) to C106
S211 (Manual)	Emission harness, near safety wall grommet
S212	Emission harness, near Take Out (T/O) to powertrain control module (PCM)
S215	I/P harness, near Take Out (T/O) to C206
S216	I/P harness, in Take Out (T/O) to instrument cluster connector C240
S217	I/P harness, near Take Out (T/O) to instrument cluster connector C240
S218	I/P harness, near Take Out (T/O) to C255 and C249
S221	Rear harness, near Take Out (T/O) to C204
S222	Rear harness, near Take Out (T/O) to C204
S223	Emission harness, neat Take Out (T/O) to powertrain control module (PCM)
S225	Front harness, near safety wall grommet
S226	Front harness, near safety wall grommet
S228	I/P harness, near Take Out (T/O) to joint connector C270
S229	Front harness, near Take Out (T/O) to C251
S230	Rear harness, behind LH side of I/P
S231	Front harness, near Take Out (T/O) to interior fuse panel connector C214
S232	I/P harness, near Take Out (T/O) to joint connector C270
S236	Front harness, near Take Out (T/O) to ignition switch
S237	Front harness, near Take Out (T/O) to ignition switch
S238	Rear harness, near Take Out (T/O) to C204
S239	Emission harness, near Take Out (T/O) to powertrain control module (PCM)
S240	Emission harness, in Take Out (T/O) to transaxle control module (TCM) connector C258
S241	I/P harness, near Take Out (T/O) to G200
S242	I/P harness, near Take Out (T/O) to joint connector C270
S244	I/P harness, near Take Out (T/O) to joint connector C269
S245	Emission harness, in Take Out (T/O) to C255
S246	Rear harness
S247	Rear harness
S248	Rear harness
S249	Rear harness
S250	Rear harness

S251 - S300

Splice Number -- Location

S251	Rear harness
S252	I/P harness, near Take Out (T/O) to C206
S253	Rear harness
S254	I/P harness, near Take Out (T/O) to C206
S255	Emission harness, near Take Out (T/O) to powertrain control module (PCM)
S256	Emission harness, near Take Out (T/O) to powertrain control module (PCM)
S257	Emission harness, near Take Out (T/O) to powertrain control module (PCM)
S258	Rear harness, at LH door sill
S261	I/P harness, near Take Out (T/O) to C206
S262	Front harness, near Take Out (T/O) to ignition switch
S264	Rear harness, in Take Out (T/O) to powertrain control module (PCM)
S265	Rear harness, in Take Out (T/O) to C265
S266	Front harness, near Take Out (T/O) to ignition switch
S267	Cigar lighter jumper harness, near Take Out (T/O) toC233
S268	Cigar lighter jumper harness, near Take Out (T/O) to C233
S269	I/P harness, near Take Out (T/O) to joint connector C269
S270	I/P harness, near Take Out (T/O) to radio connector C211
S271	I/P harness, behind center of I/P, near RH edge of harness channel
S272	I/P harness, behind center of I/P, near RH edge of harness channel
S273	I/P harness, behind center of I/P, near RH edge of harness channel
S274	I/P harness, near T/0 of C206
S275	I/P harness, near Take Out (T/O) to joint connector C270

S276	I/P harness, near Take Out (T/O) to joint connector C269
S277	Engine harness, in Take Out (T/O) to powertrain control module (PCM)
S278	Emission harness, at Take Out (T/O) to powertrain control module (PCM)
S279	Emission harness, near Take Out (T/O) to powertrain control module (PCM)
S280 (With DRL)	I/P harness, behind center of I/P, near RH edge of harness channel
S280 (Without DRL)	I/P harness, near Take Out (T/O) to G200
S281	I/P harness, near Take Out (T/O) to joint connector C269
S283	I/P harness, near Take Out (T/O) to C206
S284	I/P harness, near Take Out (T/O) to C206
S285	Emission harness, near safety wall grommet
S286	Emission harness, near safety wall grommet
S287	Emission harness, near safety wall grommet
S288	Rear harness, near Take Out (T/O) to C204
S289	I/P harness, near Take Out (T/O) to G200
S290	Emission harness, near Take Out (T/O) to powertrain control module (PCM)
S291	Emission harness, near safety wall grommet
S292	Emission harness, near safety wall grommet
S293	Emission harness, near safety wall grommet
S294	Emission harness, near safety wall grommet
S295	Front harness, near Take Out (T/O) to interior fuse panel connector C214
S296	Emission harness, near Take Out (T/O) to powertrain control module (PCM)
S297	Front harness, near Take Out (T/O) to G201
S298	Front harness, near Take Out (T/O) to G201
S299	Emission harness, near Take Out (T/O) to powertrain control module (PCM)
S300	Rear harness, near Take Out (T/O) to C204

S301 - S2014

Splice Number -- Location

S301	Rear harness, near Take Out (T/O) to right rear speaker
S302	Rear harness, near Take Out (T/O) to C302
S303	Rear harness, near Take Out (T/O) to C302
S304	Rear harness, near Take Out (T/O) to park brake switch
S305	Rear harness, near Take Out (T/O) to park brake switch
S306	Rear harness, near Take Out (T/O) to C302
S307	Power seat switch harness
S308	Rear harness, near Take Out (T/O) to C200
S309	Rear harness
S310	Power seat switch harness
S311	Rear harness
S312	Rear harness, near Take Out (T/O) to park brake switch
S313	Power seat switch harness
S314	Power seat switch harness
S316	Rear harness, near Take Out (T/O) to C428
S400	Rear harness, near Take Out (T/O) to inertia fuel shutoff switch
S401	Rear #3 harness, near Take Out (T/O) to G401
S402	Rear #2 harness, near Take Out (T/O) to C410
S403	Rear #2 harness, near Take Out (T/O) to C414
S404	Rear harness, near Take Out (T/O) to C427
S405	Rear harness, near Take Out (T/O) to luggage compartment lamp
S406	Rear harness, near Take Out (T/O) to inertia fuel shutoff switch
S407	Rear harness, near Take Out (T/O) to inertia fuel shutoff switch
S408	Rear #2 harness, near Take Out (T/O) to C414
S500	LH door harness, near Take Out (T/O) to left power/heated mirror
S501	LH door harness
S502	LH door harness
S503	LH door harness
S504	LH door harness, near Take Out (T/O) to left power/heated mirror
S600	RH door harness, near Take Out (T/O) to right power/heated mirror
S601	RH door harness
S602	RH door harness
S603	RH door harness
S900	Room harness, near Take Out (T/O) to left vanity mirror lamp
S901	Room harness, near Take Out (T/O) to left vanity mirror lamp
S2000	I/P harness, near Take Out (T/O) to C255 and C249
S2001	I/P harness, near Take Out (T/O) to C255 and C249
S2002	Emission harness, near safety wall grommet
S2003	Emission harness, near safety wall grommet
S2004	Emission harness, near safety wall grommet

S2005	Emission harness, near safety wall grommet
S2006	Emission harness, near safety wall grommet
S2008	Emission harness, near safety wall grommet
S2009	Emission harness, near safety wall grommet
S2010	Emission harness, near safety wall grommet
S2011	Emission harness, near Take Out (T/O) to powertrain control module (PCM)
S2012	Emission harness, near Take Out (T/O) to powertrain control module (PCM)
S2013	Emission harness, near Take Out (T/O) to transaxle control module (TCM)
S2014	Front harness, at safety wall grommet

Vehicle: Diagrams

How to Find and Use These Diagrams

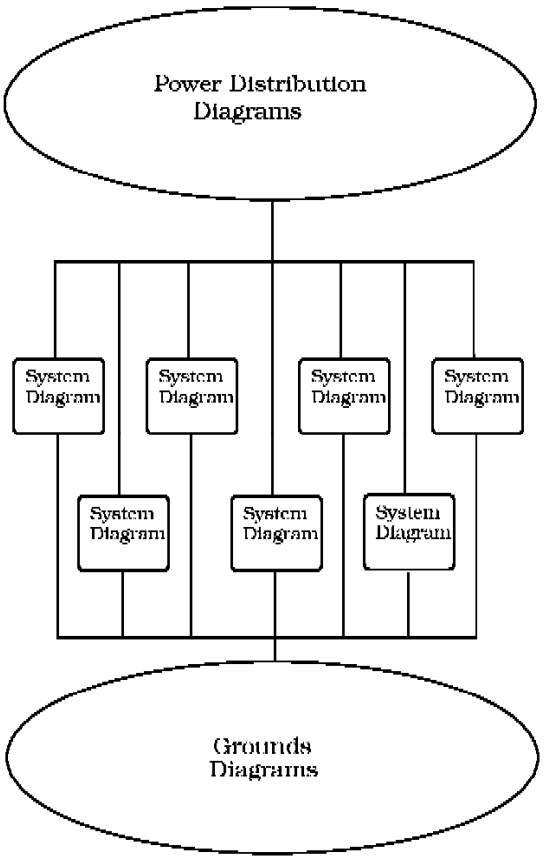

Diagrams are presented in three main categories:

- Power Distribution Diagrams
- System Diagrams
- Grounds Diagrams

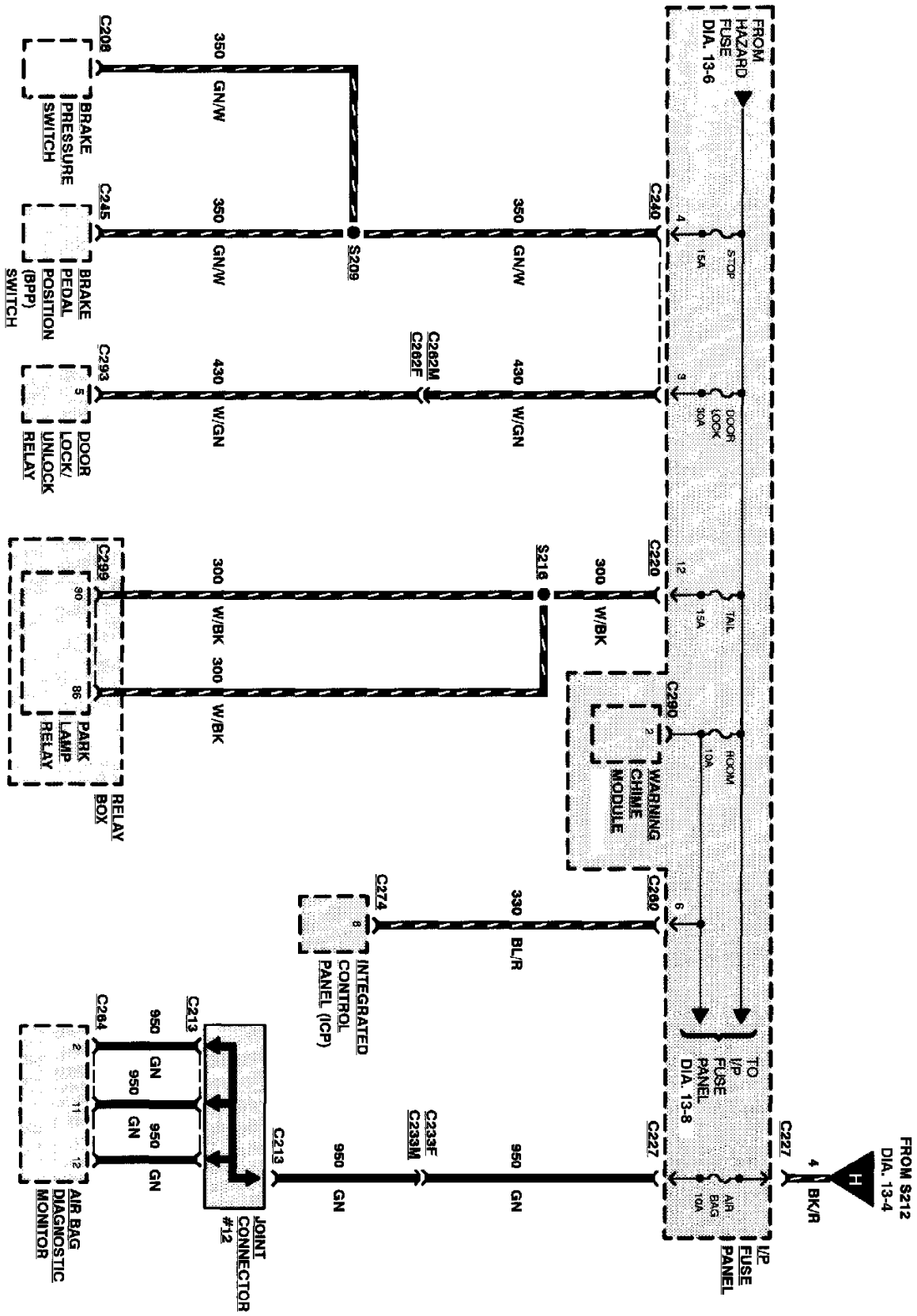

Sample Power Distribution Diagram

Power Distribution Diagrams

Provide the circuit details of how the system diagrams are powered. The power distribution source is shown at the top of a diagram page. All wires, connectors, and splices are shown in the same manner that the current flows, ending at the component/system being powered near the bottom of a diagram page. Circuits that go from one diagram page to another will be marked with large arrow heads.

The power distribution diagrams can be found at Starting and Charging/Power and Ground Distribution.

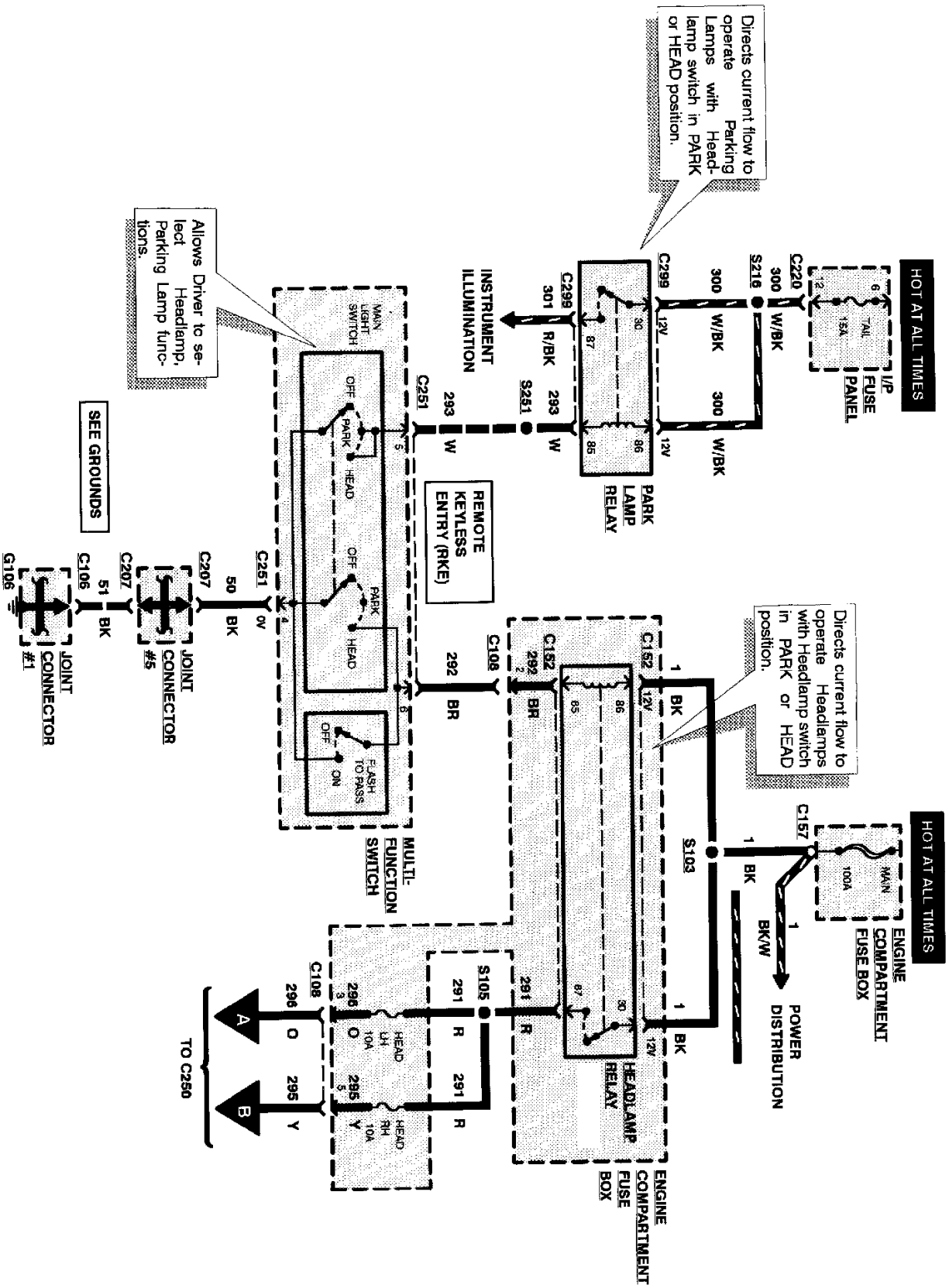

Sample System Diagram

System Diagrams

Components that work together are shown together in a system/subsystem diagram or set of diagrams. The system feed (circuit breaker, fuse, etc.) is shown at the top of a diagram page. All wires, connectors, components, and splices are shown in the same manner that the current flows, ending at the ground at the bottom of a diagram page. Circuits that go from one diagram page to another will be marked with large arrow heads.

The system diagrams can be found at the specific Alldata System/SubSystem that they are most closely related to, such as Cruise Control, Powertrain Management, Radio/Stereo, etc.

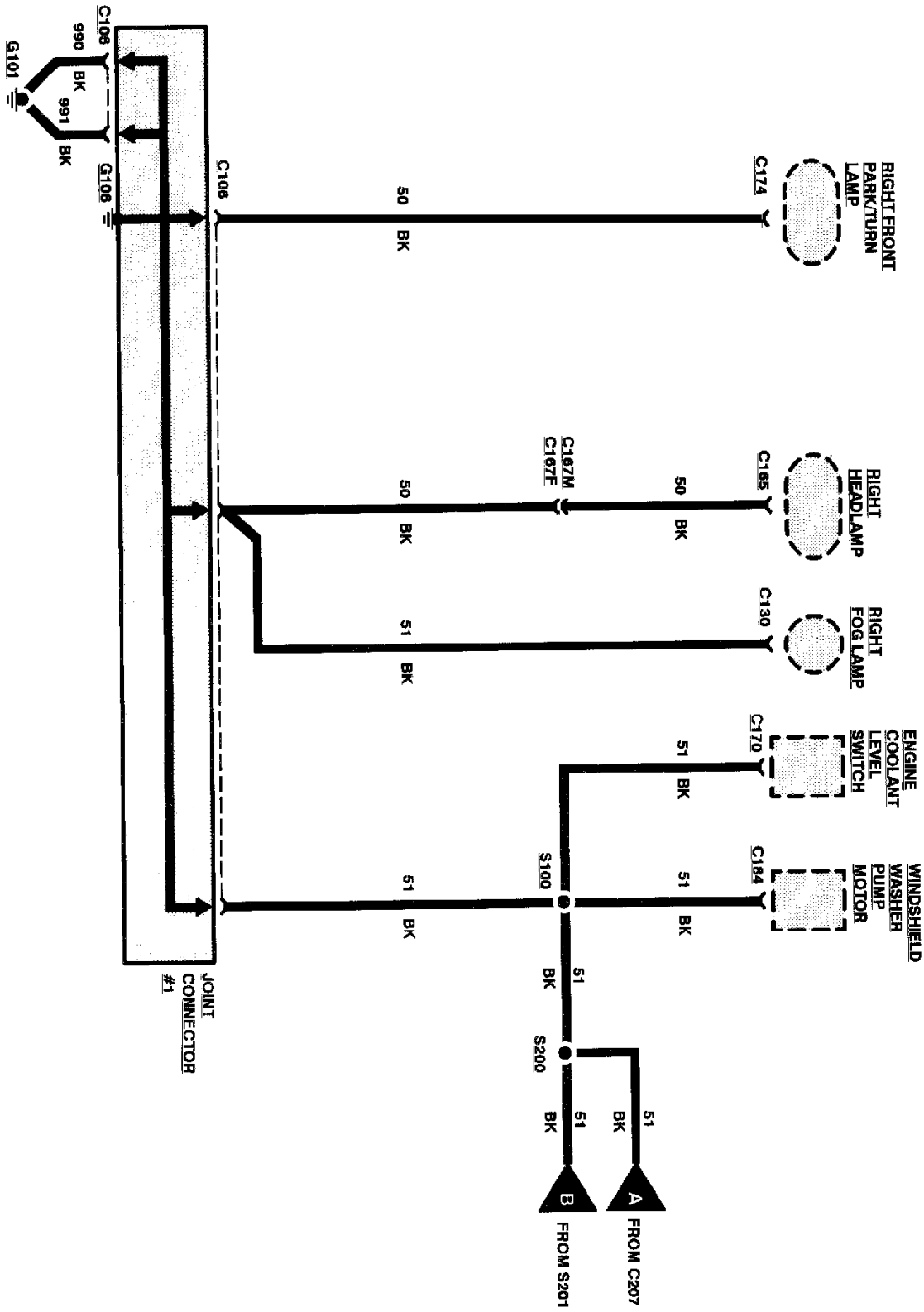

Sample Grounds Diagram

Grounds Diagrams

Provide the circuit details of how the system diagrams are grounded. This information is useful for checking interconnections of the grounding circuits of different systems. The components/systems being grounded are shown at the top of a diagram page. All wires, connectors, and splices are shown in the same manner that the current flows, ending at the ground at the bottom of a diagram page. Circuits that go from one diagram page to another will be marked with large arrow heads.

The grounds diagrams can be found at Starting and Charging/Power and Ground Distribution.

A/CL BI-MET — AIR CLEANER BI-METAL SENSOR	CC — CARBON CANISTER	PCV — PCV FLOW CONTROL VALVE	V-CBV — VACUUM BOWL VENT VALVE OR VACUUM/THERMO. BOWL VENT VALVE
A/CL CWM — COLD WEATHER MODULATOR (IN AIR CLEANER)	CPRV — CANISTER PURGE SOLENOID	PURGE CV — CANISTER PURGE CONTROL VALVE	VCKV — VACUUM CHECK VALVE
A/CL DV — AIR INLET DOOR VACUUM MOTOR (ON SNORKEL)	DIST — DISTRIBUTOR (VACUUM ADVANCE)	REG — BACKPRESSURE VARIABLE TRANSDUCER (BVT)	VCV 2-PORT / VCV 3-PORT / VCV 4-PORT — PORTED VACUUM SWITCH (PVS)
ACV — THERMACTOR AIR CONTROL VALVE	EFCA — FUEL CHARGING ASSEMBLY	SA-FV — FUEL-VACUUM SEPARATOR	
AIR BPV — THERMACTOR AIR BYPASS VALVE (DIFFERENTIAL WITHOUT VACUUM VENT)	EGR — EXHAUST GAS RECIRCULATION VALVE	SOL V — SOLENOID VACUUM VALVE (NORMALLY CLOSED)	VDV — VACUUM DELAY VALVE
AIR BPV AIR BPV — THERMACTOR AIR BYPASS VALVE (DIFFERENTIAL WITH VACUUM VENT)	EVR — ELECTRONIC VACUUM REGULATOR	SOLV SOL V — SOLENOID VACUUM VALVE (NORMALLY OPEN)	VRDV — VACUUM RETARD DELAY VALVE
ACV — THERMACTOR DIVERTER VALVE	HCV — EXHAUST HEAT CONTROL VALVE	SV-CBV — FUEL BOWL SOLENOID	VRESER — VACUUM RESERVOIR
AIR BPV — THERMACTOR AIR BYPASS VALVE (NON-DIFFERENTIAL)	IVV VAC — THERMACTOR IDLE VACUUM VALVE	TVS — TEMPERATURE VACUUM SWITCH	VREST — VACUUM RESTRICTOR
BVT — BACKPRESSURE VARIABLE TRANSDUCER	LCV — LOAD CONTROL VALVE (WOT VALVE)	TVV — THERMAL BOWL VENT VALVE	VRV — VACUUM REGUALTOR VALVE
CARB — CARBURETOR	MAN VAC — MANIFOLD VACUUM FITTING	VAC IVV — THERMACTOR IDLE VACUUM VALVE	VVVAC OR VACVV-D — VACUUM VENT VALVE

Vacuum And Vapor Hose Schematic Symbols

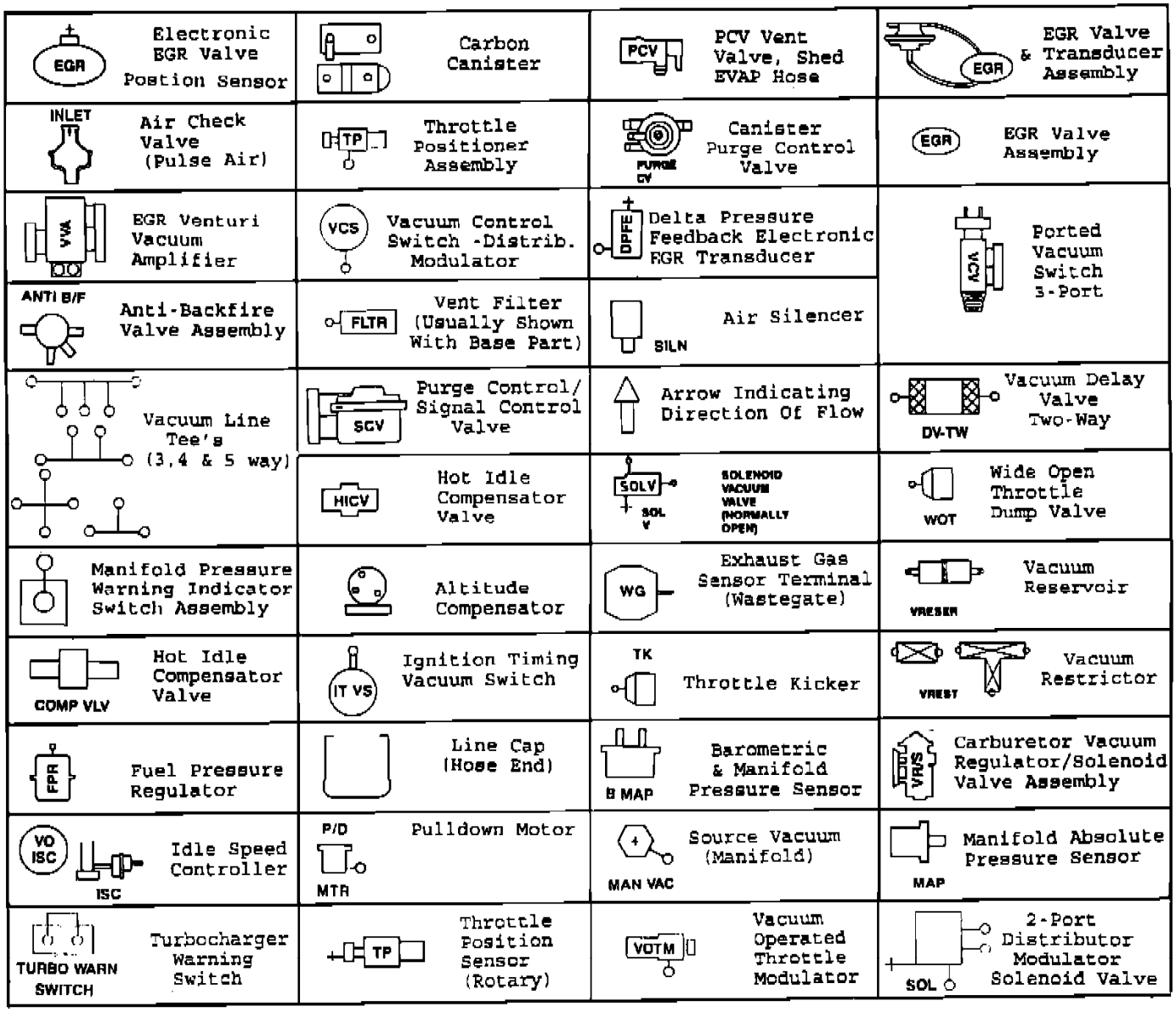

Vacuum And Vapor Hose Schematic Symbols

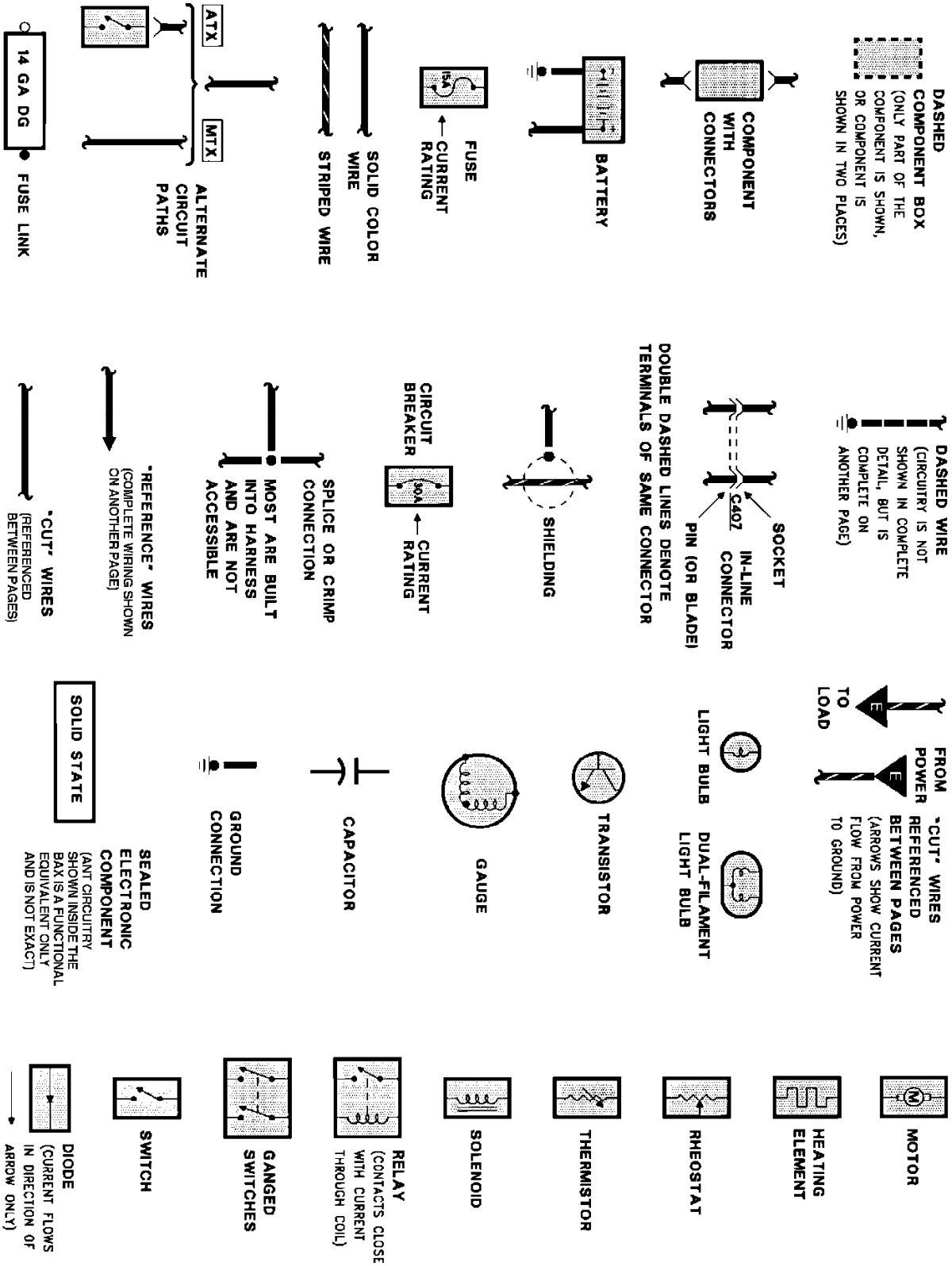

Symbol Identification

Wire Color Code Identification

BK: Black
BL: Blue
BR: Brown
DB: Dark Blue
DG: Dark Green
GY: Gray
GN: Green
LB: Light Blue
LG: Light Green
PK: Pink
O: Orange
P: Purple
R: Red

T: Tan
V: Violet
W: White
Y: Yellow

Where two colors are shown for a wire, first is basic color and second is stripe marking (tracer).
For example, **BR/O** is brown with orange stripe.

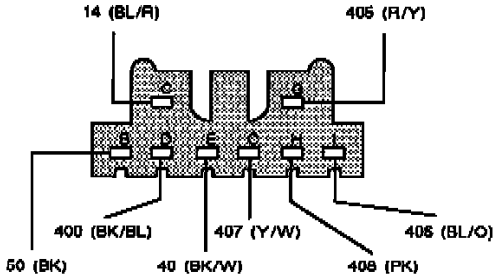

C122

ABS MAIN RELAY

ABS Main Relay

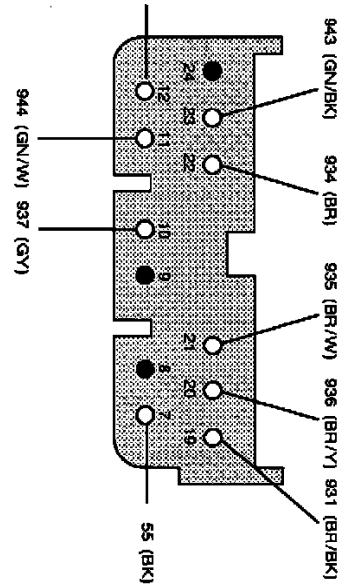

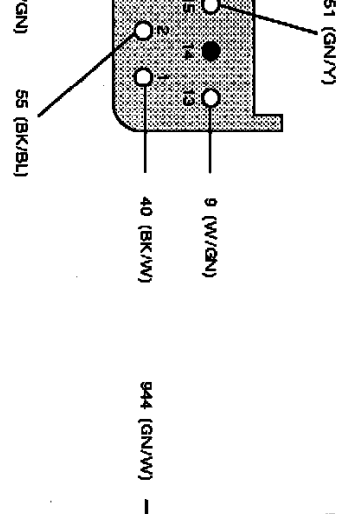

AIR BAG DIAGNOSTIC MONITOR

C209			C210		
PIN	CIRCUIT	CIRCUIT FUNCTION	PIN	CIRCUIT	CIRCUIT FUNCTION
1	40 (BK/W)	Switched Power	7	55 (BK)	Ground
2	55 (BK/BL)	Ground	8	—	NOT USED
3	55 (BK/GN)	Ground	9	—	NOT USED
4	952 (R/GN)	Air Bag Indicator Output	10	937 (GY)	Deploy Air Bag Output
5	55 (BK)	Ground	11	944 (GN/W)	Safing Sensor
6	40 (BK/W)	Switched Power	12	944 (GN/W)	Safing Sensor
13	9 (W/GN)	Battery	19	931 (BR/BK)	Left Crash Sensor
14	—	NOT USED	20	936 (BR/Y)	Right Crash Sensor
15	951 (GN/Y)	Safing Sensor	21	935 (BR/W)	Center Radiator Crash Sensor
16	940 (GN)	Safing Sensor	22	934 (BR)	Left Crash Sensor
17	933 (BR/GN)	Right Crash Sensor	23	943 (GN/BK)	Safing Sensor
18	932 (BR/R)	Center Radiator Crash Sensor	24	—	NOT USED

Air Bag Diagnostic Monitor

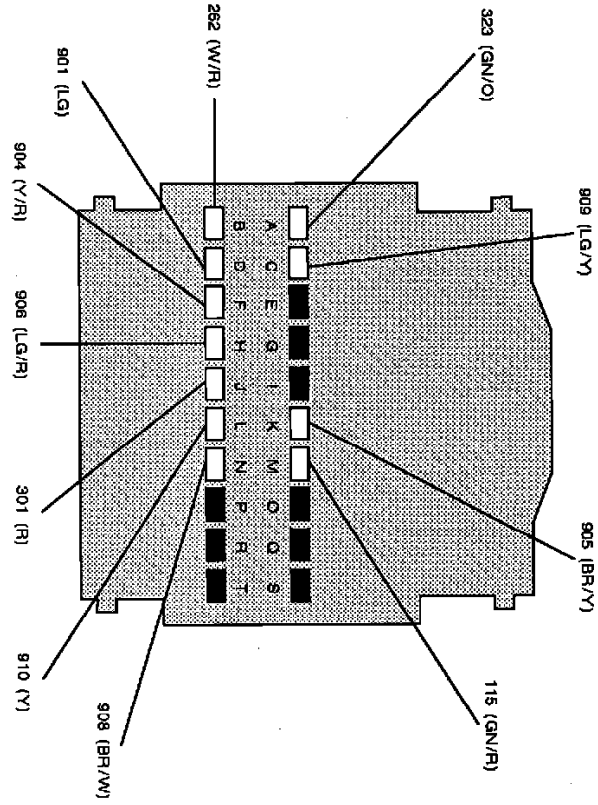

C204
CENTRAL PROCESSING UNIT (CPU)

PIN	CIRCUIT	CIRCUIT FUNCTION	PIN	CIRCUIT	CIRCUIT FUNCTION
A	323 (GN/O)	Horn Relay Output	K	905 (BR/Y)	Left Door Lock Switch Input
B	262 (W/R)	Head lamp Relay Output	L	910 (Y)	Right Door Lock Switch Input
C	909 (LG/Y)	Start Enable Output	M	115 (GN/R)	Hazard Lamps Output
D	901 (LG)	Anti-theft Indicator Output	N	908 (BR/W)	Hood Open Input
E	—	NOT USED	O	—	NOT USED
F	904 (Y/R)	Anti-theft Disarm Input	P	—	NOT USED
G	—	NOT USED	Q	—	NOT USED
H	906 (LG/R)	Liftgate Key Cylinder Output	R	—	NOT USED
I	—	NOT USED	S	—	NOT USED
J	301 (R)	Liftgate Open Input	T	—	NOT USED

Central Processing Unit

Alternator

For Integral Alternator Regulator (IAR) Connector Views, please refer to: Starting and Charging/Charging System/Voltage Regulator,

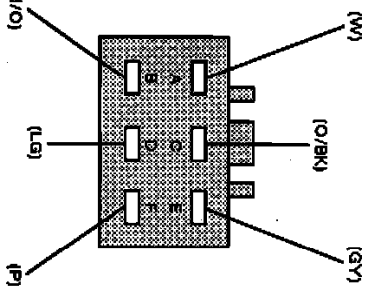

GRAPHIC EQUALIZER

PIN	CIRCUIT	CIRCUIT FUNCTION
A	(W)	Equalizer Status
B	(GN/O)	Signal Return
C	(O/BK)	RH Input from radio
D	(LG)	LH Input from radio
E	(GY)	RH Output to radio
F	(P)	LH Output to radio

PIN	CIRCUIT	CIRCUIT FUNCTION
A	306 (GN/R)	Illumination Return
B	99 (BK/BL)	Ground
C	80 (O)	Illumination Power
D	84 (BL/R)	Power
E	213 (LG/Y)	Radio ON Signal
F	—	NOT USED

Graphic Equalizer

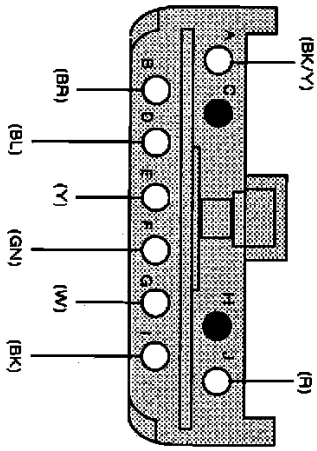

C314
RADIO AMPLIFIER

PIN	CIRCUIT	CIRCUIT FUNCTION
A	(BK/Y)	Right Rear Speaker (–) Input
B	(BR)	Right Rear Speaker (+) Input
C	–	NOT USED
D	(BL)	Right Front Speaker (–) Input
E	(Y)	Right Front Speaker (+) Input
F	(GN)	Left Rear Speaker (–) Input
G	(W)	Left Rear Speaker (+) Input
H	–	NOT USED
I	(BK)	Left Front Speaker (–) Input
J	(R)	Left Front Speaker (+) Input

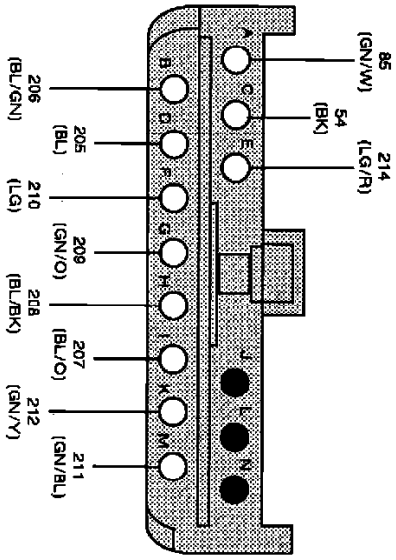

C315
RADIO AMPLIFIER

PIN	CIRCUIT	CIRCUIT FUNCTION
A	85 (GN/W)	Power
B	206 (BL/GN)	Left Front Door Speaker (+) Output
C	54 (BK)	Ground
D	205 (BL)	Left Front Door Speaker (–) Output
E	214 (LG/R)	Amplifier Mute
F	210 (LG)	Left Rear Speaker (+) Output
G	209 (GN/O)	Left Rear Speaker (–) Output
H	208 (BL/BK)	Right Front Door Speaker (+) Output
I	207 (BL/O)	Right Front Door Speaker (–) Output
J	–	NOT USED
K	212 (GN/Y)	Right Rear Speaker (+) Output
L	–	NOT USED
M	211 (GN/BL)	Right Rear Speaker (–) Output
N	–	NOT USED

Radio Amplifier

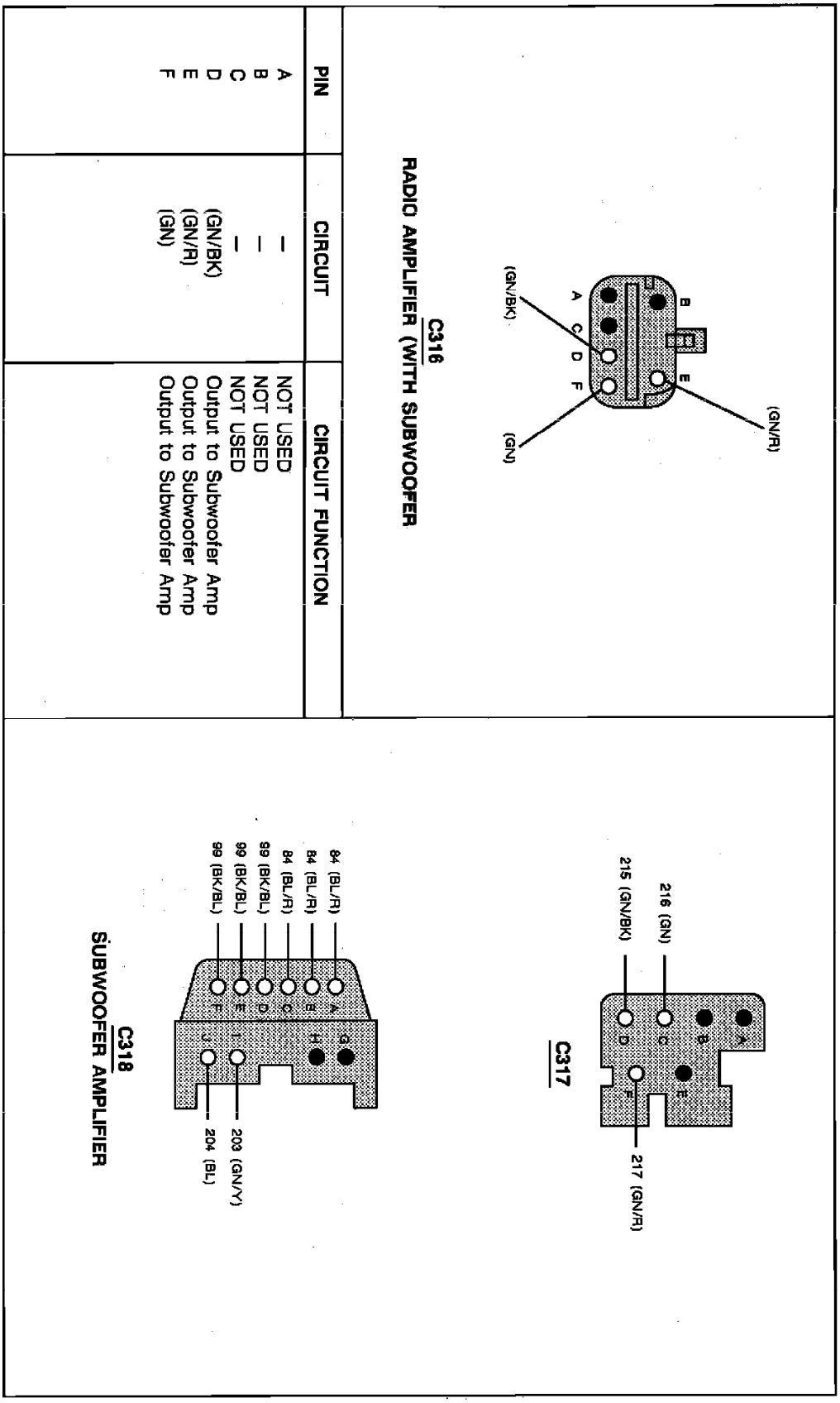

PIN	CIRCUIT	CIRCUIT FUNCTION
A	—	NOT USED
B	—	NOT USED
C	—	NOT USED
D	(GN/BK)	Output to Subwoofer Amp
E	(GN/R)	Output to Subwoofer Amp
F	(GN)	Output to Subwoofer Amp

Radio Amplifier (With Subwoofer)

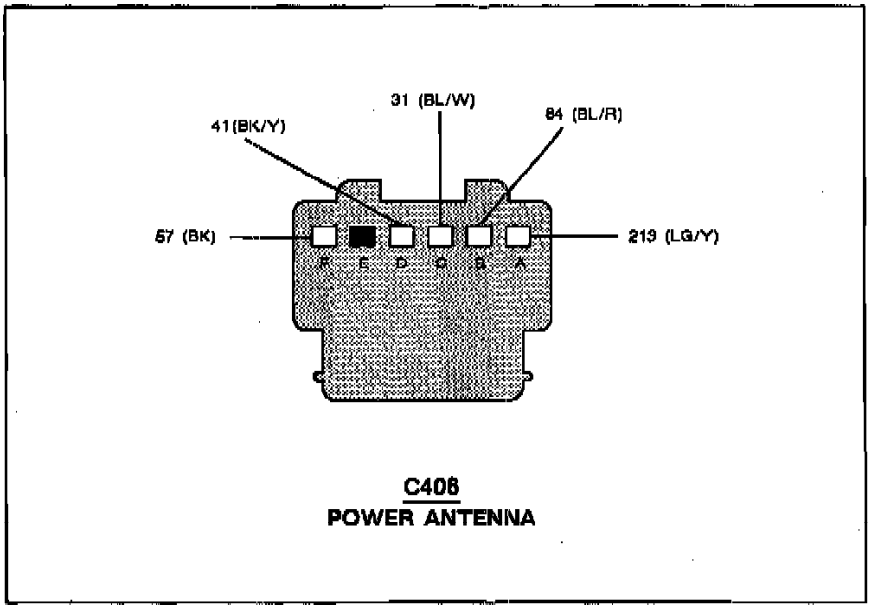

Power Antenna

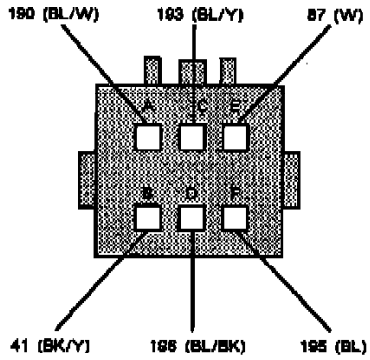

C266
BLOWER ASSEMBLY

Blower Assembly

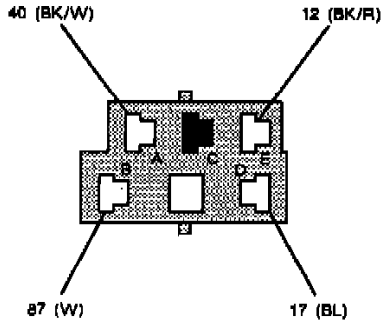

C145
LOW SPEED BLOWER MOTOR RELAY

Low Speed Blower Motor Relay

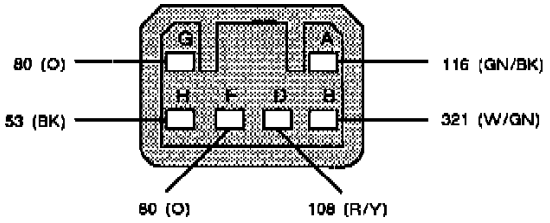

C401
LEFT REAR COMBINATION LAMP

Left Rear Combination Lamp

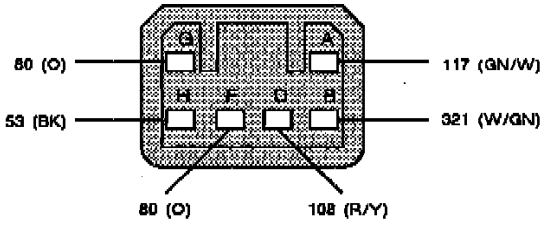

C402
RIGHT REAR COMBINATION LAMP

Right Rear Combination Lamp

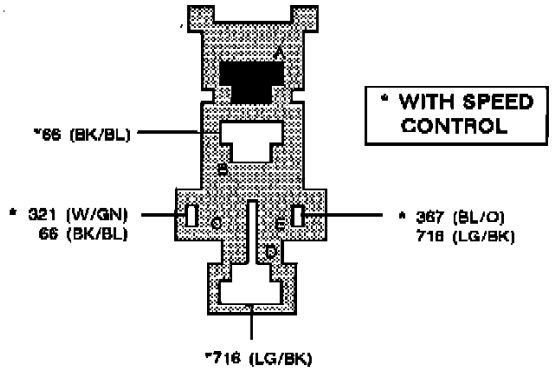

C230
CLUTCH PEDAL POSITION SWITCH

Clutch Pedal Position Switch

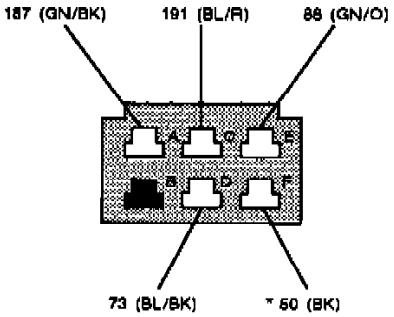

C132
A/C RELAY
(IN ENGINE COMPARTMENT FUSE BOX)

*** WITH 2.0L ONLY**

A/C Relay

PCM Pin	Breakout Box Pin	Wire Color	Application	Abbrev.
1A	1	BL/R	Keep Alive Power	KAPWR
1B	37	R/BK	Vehicle Power	VPWR
1C	38	W/R	Switch Monitor Lamp	SML
1D	5	BK/R	Vehicle Start	VST
1E	51	BL	Malfunction Indicator Lamp	MIL
1F	2	W/GN	Brake ON/OFF Switch	BOO
1G	17	LG/R	Self Test Output	STO
1H	23	BR/BK	Overdrive OFF Switch	ODS
1I	36	BL/O	Ignition Control Module	ICM
1J	32	W	Headlamp Switch	HDLT
1K	28	GN	Daytime Running Lamp Relay (Canada Only)	DRL
1L	48	R/W	Self Test Input	STI
1M	3	GN/R	Vehicle Speed Sensor	VSS
1N	10	BR/Y	Power Steering Pressure Switch	PSP
1O	34	P	Rear Window Defroster Switch	DEF
1P	22	O/BK	Blower Motor Control Switch	BLMT
1Q	15	PK/GN	Overdrive OFF Lamp	ODL
1R	41	PK/BK	Clutch Cycling Pressure Switch	CCPS
1S	14	GN/BK	A/C Relay	ACR
1T	18	BR	Idle Switch	IDL
1U	57	R/BK	Vehicle Power	VPWR
1V	30	GN	Manual Lever Position Switch	MLP
2A	56	GN/O	Crankshaft Position Sensor	CKP
2B	4	LG/W	Cylinder Identification Sensor	CID
2C	29	BK/Y	Heated Oxygen Sensor	HO2S
2D	47	Y	Throttle Position Sensor	TP
2E	7	R/GN	Engine Coolant Temperature Sensor	ECT
2F	25	R/W	Intake Air Temperature Sensor	IAT
2G	45	BL	Barometric Pressure Sensor	BARO
2H	44	BL/Y	Transaxle Oil Temperature Sensor	TOT
2I	26	P	Reference Voltage	VREF
2J	9	R	EGR Temperature Sensor (California Only)	EGRT
2K	50	BL/W	Cooling Fan Engine Coolant Temperature Sensor	ECTF
2L	27	BK/R	Mass Air Flow Sensor	MAF
2M	35	R/Y	Reverse Range (Selector Lever)	MLPR
2N	49	BL/O	First Range (Selector Lever)	MLP1
2O	43	GN/W	Second Range (Selector Lever)	MLP2
2P	19	R/BL	Drive Range (Selector Lever)	MLPD

(Continued)

PCM Connector Pin Chart (Part 1)

PCM Pin	Breakout Box Pin	Wire Color	Application	Abbrev.
3A	40, 60	BK	Ground	GND
3B	20	BK	Ground	GND
3C	16	BK/R	Ground	GND
3D	46	BK/BL	Signal Return	SIGRTN
3F	24	W	Pulse Signal Generator (+)	PSG+
3G	55	BK/GN	High Cooling Fan Relay	HFAN
3H	52	R	Pulse Signal Generator (-)	PSG-
3I	54	BL/GN	Low Cooling Fan Relay	LFAN
3K	33	W/BL	EGR Vacuum Regulator Solenoid	EVR
3L	8	LG	Fuel Pump Relay	FPR
3M	53A	GN	Fuel Pressure Regulator Control Solenoid	FPRC
3N	31A	W/BK	Caniater Purge Solenoid	CANP
3O	21A	LG/BR	Idle Air Control Solenoid	IAC
3P	6A	BL	1-2 Shift Solenoid (Shift Solenoid #1)	SS1
3Q	53B	BL/BK	2-3 Shift Solenoid (Shift Solenoid #2)	SS2
3R	31B	GN/BK	3-4 Shift Solenoid (Shift Solenoid #3)	SS3
3S	21B	BL/W	Torque Converter Clutch Control Solenoid	TCCC
3T	6B	R/W	Downshift Solenoid	DSS
3U	11	R/BK	Torque Converter Clutch Solenoid	TCC
3V	42	R/GN	Line Pressure Solenoid	LPS
3W	58	Y/BK	Injector #1	INJ1
3X	59	Y/W	Injector #2	INJ2
3Y	12	Y/R	Injector #3	INJ3
3Z	13	Y/GN	Injector #4	INJ4

PCM Connector Pin Chart (Part 2)

Air Flow Meter/Sensor

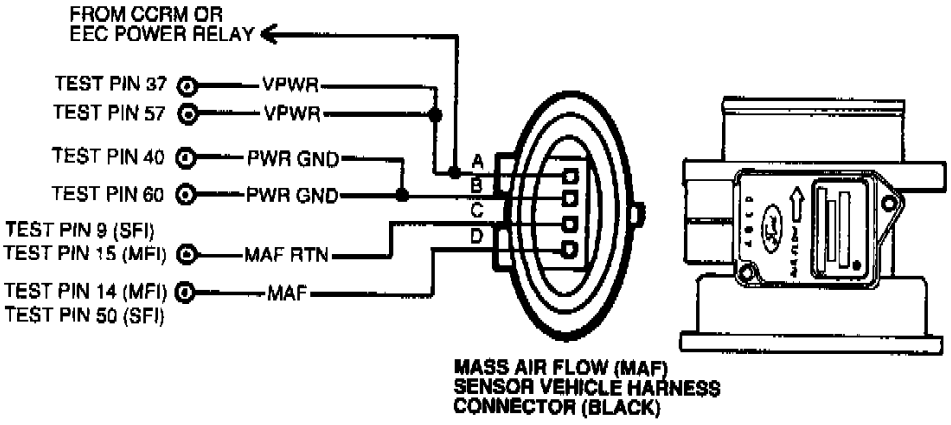

Black Connector Testing Schematic

BLACK CONNECTOR

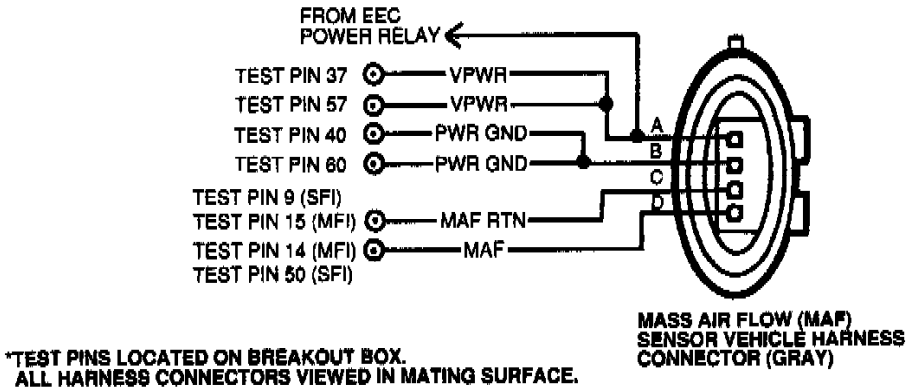

Gray Connector Testing Schematic

GRAY CONNECTOR

Coolant Temperature Sensor/Switch (For Computer)

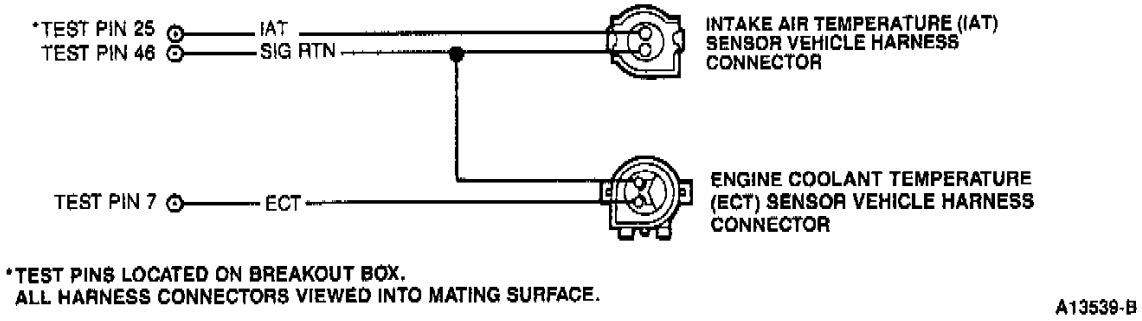

NOTE: **On some applications, the IAT sensor circuits may be reversed. Use the wire color charts to correctly identify connecter circuits.**

Connector Views

CIRCUIT / WIRE COLOR

IAT 25 / white/light green

SIG RTN 46 / black/blue

ECT 7 / light yellow/black

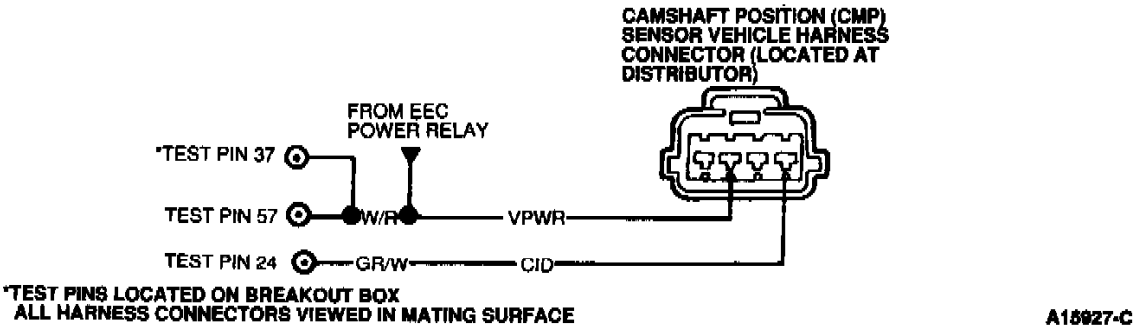

Testing Schematic

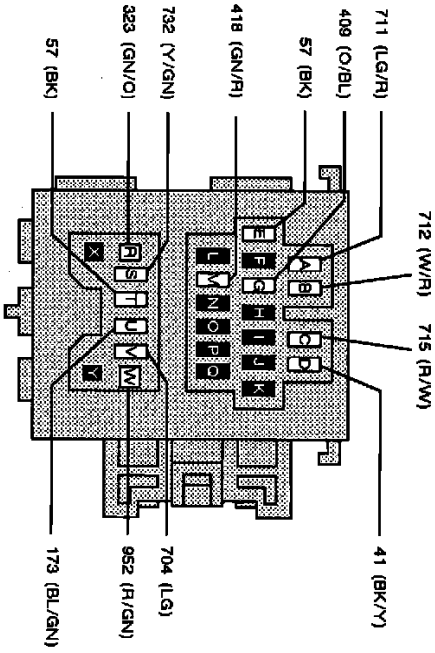

C135
DATA LINK CONNECTOR (DLC)

PIN	CIRCUIT	CIRCUIT FUNCTION	PIN	CIRCUIT	CIRCUIT FUNCTION
A	711 (LG/R)	EEC STO (FEN)	N	-	NOT USED
B	712 (W/R)	SML (MEN)	O	-	NOT USED
C	715 (R/W)	EEC STI (TEN)	P	-	NOT USED
D	41 (BK/Y)	Ignition (B+)	Q	-	NOT USED
E	57 (BK)	Ground (GND)	R	323 (GN/O)	Horn Relay
F	-	NOT USED	S	732 (Y/GN)	Tachometer Signal (IG–)
G	409 (O/BL)	Anti-lock Brake Diagnosis (FBS)	T	57 BK	Ground (GND)
H	-	NOT USED	U	173 (BL/GN)	Cooling Fan Relay (TPA)
I	-	NOT USED	V	704 (LG)	Fuel Pump Relay (F/P)
J	-	NOT USED	W	952 (R/GN)	Air Bag Diagnosis (TAB)
K	-	NOT USED	X	-	NOT USED
L	-	NOT USED	Y	-	NOT USED
M	418 (GN/R)	Anti-lock Brake Diagnosis (TBS)			

Data Link Connector (DLC)

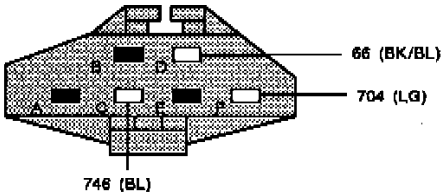

C191
DATA LINK CONNECTOR (DLC)

Data Link Connector (DLC)

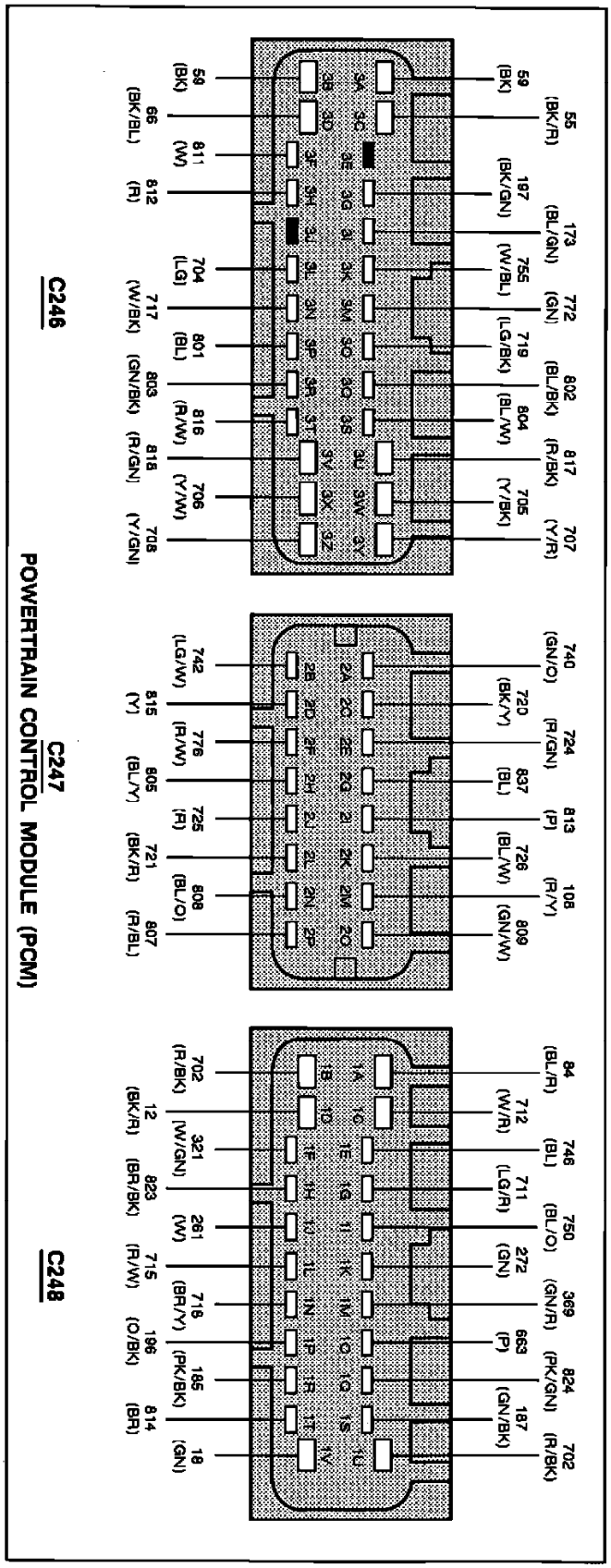

C246

PIN	CIRCUIT	CIRCUIT FUNCTION	PIN	CIRCUIT	CIRCUIT FUNCTION
3A	59 (BK)	Module Ground	3N	717 (W/BK)	Canister Purge Solenoid Output
3B	59 (BK)	Module Ground	3O	719 (LG/BK)	Idle Air Control Solenoid Output
3C	55 (BK/R)	Module Ground	3P	801 (BL)	1–2 Shift Solenoid Output
3D	66 (BK/BL)	Signal Return	3Q	802 (BL/BK)	2–3 Shift Solenoid Output
3E	–	NOT USED	3R	803 (GN/BK)	3–4 Shift Solenoid Output
3F	811 (W)	Pulse Signal Generator (+)	3S	804 (BL/W)	Lockup Control Solenoid Output
3G	197 (BK/GN)	Low Speed Fan Control	3T	816 (R/W)	3–2 Timing Solenoid Output
3H	812 (R)	Pulse Signal Generator (–)	3U	817 (R/BK)	Lockup Solenoid Output
3I	173 (BL/GN)	High Speed Fan Control	3V	818 (R/GN)	Line Pressure Solenoid Output
3J	–	NOT USED	3W	705 (Y/BK)	Fuel Injector #1 Output
3K	755 (W/BL)	EGR Solenoid Output	3X	706 (Y/W)	Fuel Injector #2 Output
3L	704 (LG)	Fuel Pump Relay (FP)	3Y	707 (Y/R)	Fuel Injector #3 Output
3M	772 (GN)	FPRC Solenoid Output	3Z	708 (Y/GN)	Fuel Injector #4 Output

Powertrain Control Module (PCM)

C247					
PIN	CIRCUIT	CIRCUIT FUNCTION	PIN	CIRCUIT	CIRCUIT FUNCTION
2A	740 (GN/O)	Crankshaft Position (CKP) Signal	2I	813 (P)	Reference Voltage Output
2B	742 (LG/W)	Cylinder Identification (CID) Signal	2J	725 (R)	EGR Temperature Sensor Input
2C	720 (BK/Y)	HO2S Input	2K	726 (BL/W)	Engine Coolant Temperature (Fan)
2D	815 (Y)	Throttle Position Input			
2E	724 (R/GN)	Engine Coolant Temperature (ECT)	2L	721 (BK/R)	Volume Air Flow Input
2F	776 (R/W)	Intake Air Temperature Input	2M	108 (R/Y)	Manual Lever Position Switch Input ("R" Range)
2G	837 (BL)	Barometric Pressure Sensor Input			
2H	805 (BL/Y)	Transaxle Fluid Temperature Input	2N	808 (BL/O)	Manual Lever Position Switch Input ("1" Range)
			2O	809 (GN/W)	Manual Lever Position Switch Input ("2" Range)
			2P	807 (R/BL)	Manual Lever Position Switch Input ("D" Range)

C248					
PIN	CIRCUIT	CIRCUIT FUNCTION	PIN	CIRCUIT	CIRCUIT FUNCTION
1A	84 (BL/R)	Keep Alive Power	1L	715 (R/W)	Data Link Connector (DLC)
1B	702 (R/BK)	PCM Power	1M	369 (GN/R)	Vehicle Speed Sensor Input (+)
1C	712 (W/R)	Data Link Connector (DLC)	1N	718 (BR/Y)	Power Steering Pressure Input
1D	12 (BK/R)	Manual Lever Position Switch Input ("P" and "N" Ranges)	1O	663 (P)	Rear Window Defrost On Input
			1P	196 (O/BK)	Blower Motor On Input
1E	746 (BL)	Malfunction Indicator Lamp Output	1Q	824 (PK/GN)	Overdrive Off Indicator Output
1F	321 (W/GN)	Brake Input	1R	185 (PK/BK)	A/C On/Off and Low Pressure Input
1G	711 (LG/R)	Data Link Connector (DLC)			
1H	823 (BR/BK)	Overdrive Off Switch Input	1S	187 (GN/BK)	A/C Relay Output
1I	750 (BL/O)	Distributor Igniter Output	1T	814 (BR)	Idle Switch Input
1J	261 (W)	Headlamps On Input	1U	702 (R/BK)	PCM Power
1K	272 (GN)	DRL Module Input	1V	18 (GN)	Start Signal Input

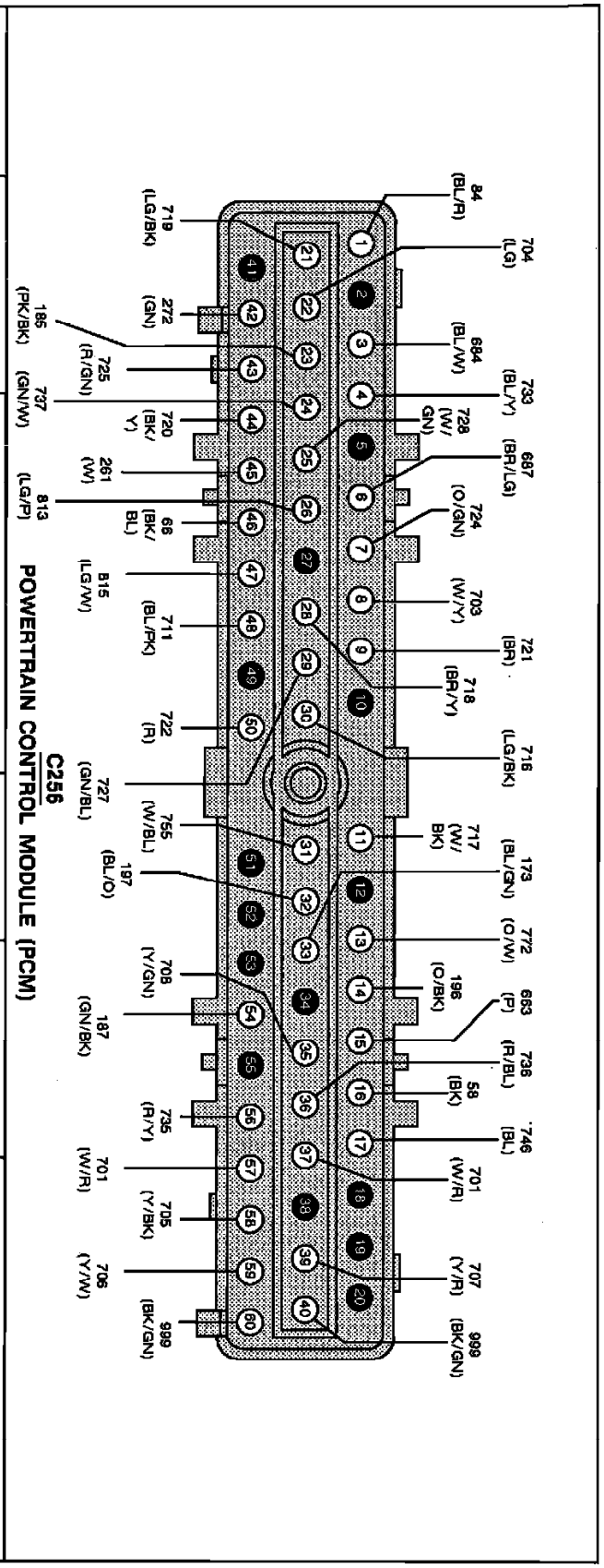

C256

POWERTRAIN CONTROL MODULE (PCM)

PIN NUMBER	CIRCUIT	CIRCUIT FUNCTION	PIN NUMBER	CIRCUIT	CIRCUIT FUNCTION
1	84 (BL/R)	Keep Alive Power	16	58 (BK)	Ignition Ground
2	-	NOT USED	17	746 (BL)	Self-Test Output (STO)/ Multifunction Indicator Lamp (MIL)
3	684 (BL/W)	Vehicle Speed Sensor (VSS) (+)			
4	733 (BL/Y)	Ignition Diagnostic Module (IDM)	18	-	NOT USED
5	-	NOT USED	19	-	NOT USED
6	687 (BR/LG)	Vehicle Speed Sensor (VSS) (-)	20	-	NOT USED
7	724 (O/GN)	Engine Coolant Temperature (ECT)	21	719 (LG/BK)	Idle Air Control (IAC)
8	703 (W/Y)	Fuel Pump Relay Monitor (FPM)	22	704 (LG)	Fuel Pump Relay (FP)
9	721 (BR)	Volume Air Flow Return	23	185 (PK/BK)	A/C On/Off and Low Pressure Input
10	-	NOT USED	24	737 (GN/W)	Crankshaft Position Input
11	717 (W/BK)	Canister Purge Solenoid Output	25	728 (W/GN)	Intake Air Temperature (IAT)
12	-	NOT USED	26	813 (LG/P)	V REF
13	772 (O/W)	FPRC Solenoid Output	27	-	NOT USED
14	196 (O/BK)	Blower Motor On Input	28	718 (BR/Y)	Power Steering Pressure Input
15	663 (P)	Rear Window Defrost On Input	29	727 (GN/BL)	Heated Oxygen Sensor (HO2S) Input

Powertrain Control Module (PCM)

PIN NUMBER	CIRCUIT	CIRCUIT FUNCTION
30	716 (LG/BK)	Park/Neutral Position Input (PNP)
31	755 (W/BL)	EGR Solenoid Output
32	197 (BL/O)	Low Speed Fan Control
33	173 (BL/GN)	High Speed Fan Control
34	-	NOT USED
35	708 (Y/GN)	Injector #4 Output
36	736 (R/BL)	Spark Output (SPOUT)
37	701 (W/R)	V PWR
38	-	NOT USED
39	707 (Y/R)	Injector #3 Output
40	999 (BK/GN)	Ground
41	-	NOT USED
42	272 (GN)	Cylinder Identification (CID) (-)
43	725 (R/GN)	EGR Temperature Input
44	720 (BK/Y)	Heated Oxygen Sensor (H02S) Ground
45	261 (W)	Headlamps On Input
46	66 (BK/BL)	Signal Return
47	815 (LG/W)	Throttle Position
48	711 (BL/PK)	Self-Test Input (STI)
49	-	NOT USED
50	722 (R)	Mass Air Flow
51	-	NOT USED
52	-	NOT USED
53	-	NOT USED
54	187 (GN/BK)	A/C Relay Output
55	-	NOT USED
56	735 (R/Y)	Profile Ignition Input (PIP)
57	701 (W/R)	V PWR
58	705 (Y/BK)	Injector #1 Output
59	706 (Y/W)	Injector #2 Output
60	999 (BK/GN)	Ground

Powertrain Control Module (PCM)

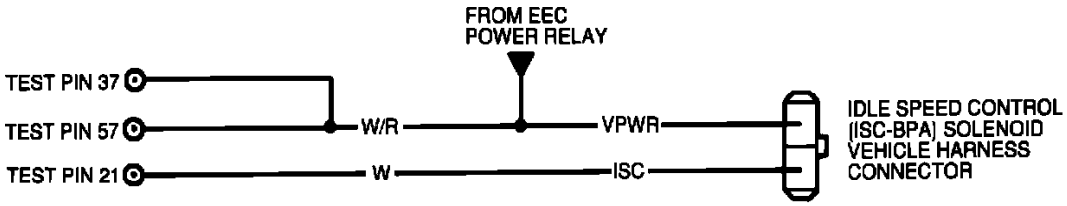

Idle Speed Control

Intake Air Temperature Sensor

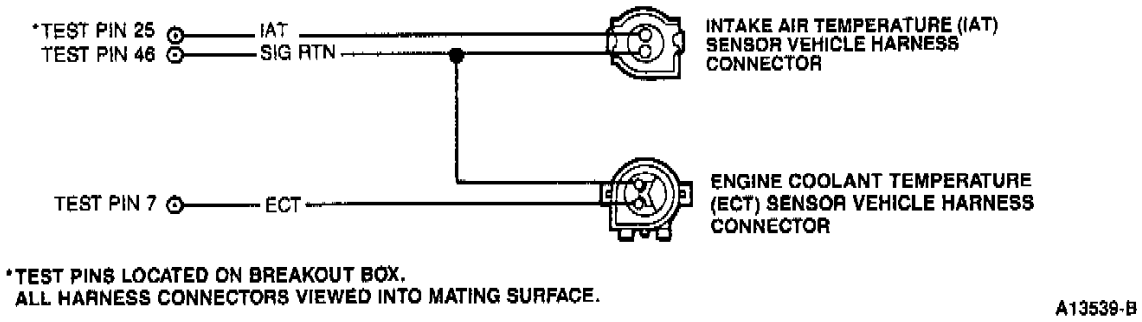

NOTE: **On some applications, the IAT sensor circuits may be reversed. Use the wire color charts to correctly identify connecter circuits.**

Connector Views

CIRCUIT / WIRE COLOR

IAT 25 / white/light green

SIG RTN 46 / black/blue

ECT 7 / light yellow/black

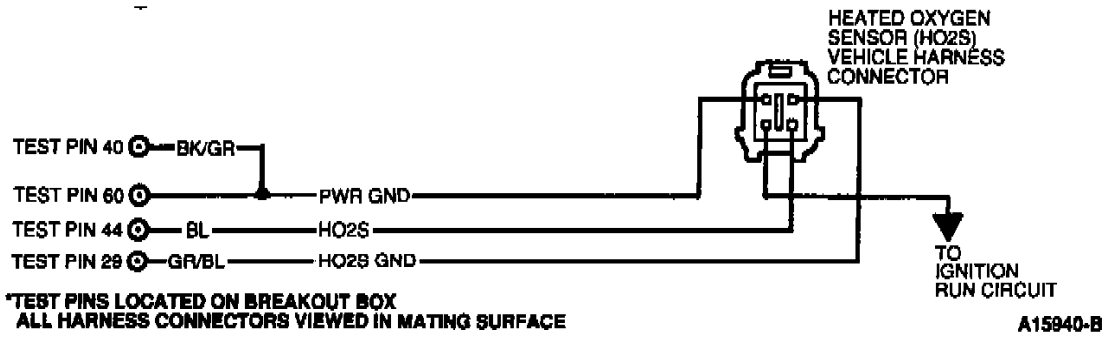

HO2S Sensor Diagram

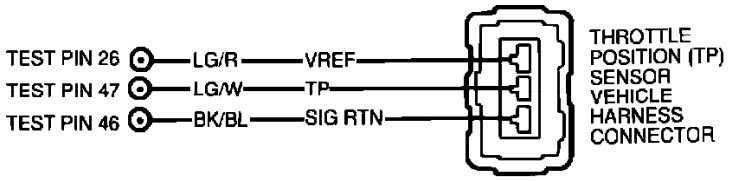

Throttle Position Sensor Schematic

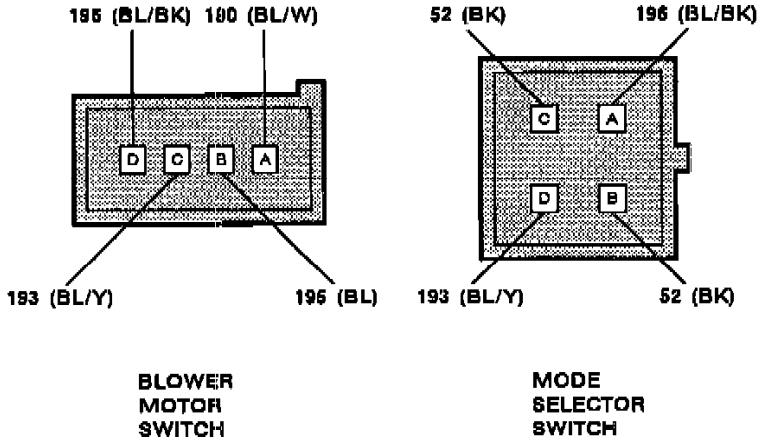

Terminal ID

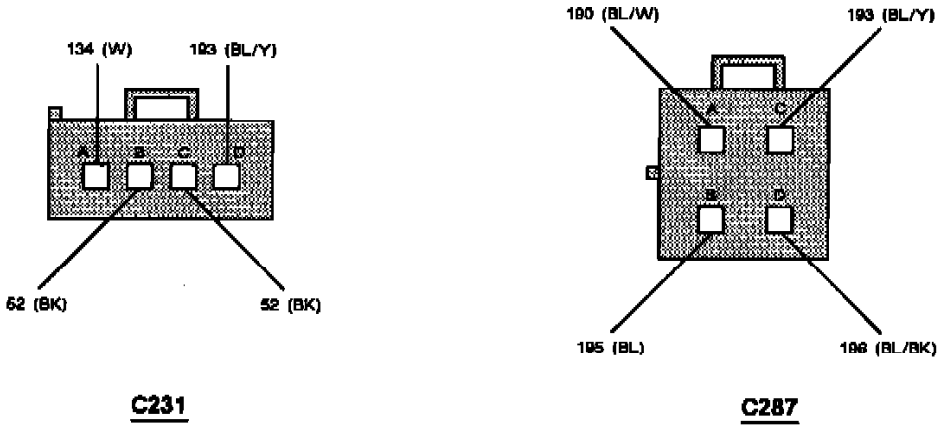

A/C-HEATER CONTROL ASSEMBLY

A/C-Heater Control Assembly

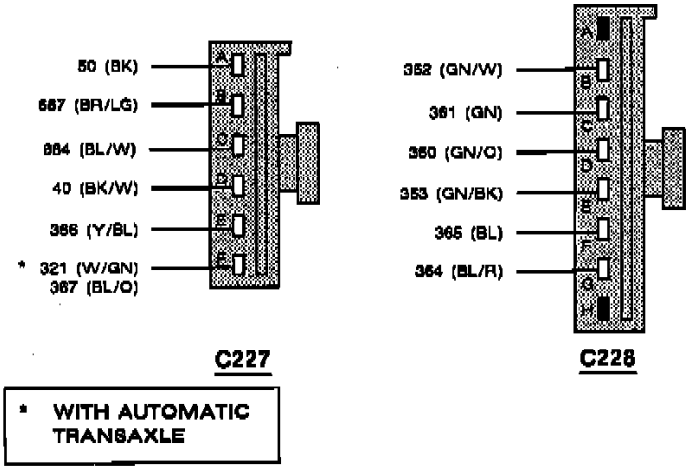

SPEED CONTROL MODULE

Speed Control Module

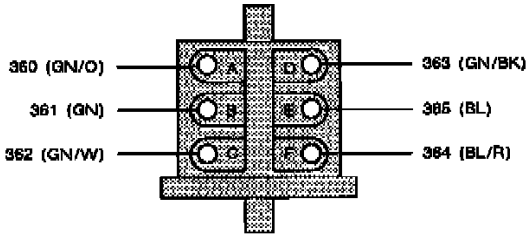

C175
SPEED CONTROL SERVO

Speed Control Servo

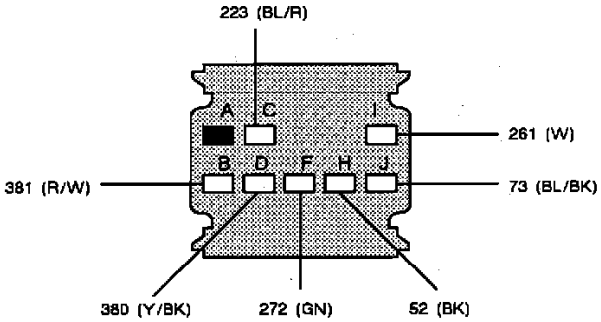

C244
DAYTIME RUNNING LAMPS (DRL) CONTROL MODULE

Daytime Running Lamps (DRL) Control Module

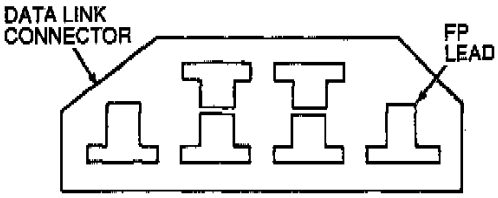

Diagnostic Lead

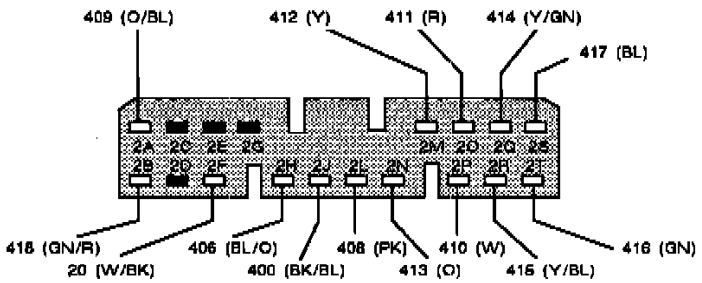

C223
ABS CONTROL MODULE

PIN	CIRCUIT	CIRCUIT FUNCTION
2A	409 (O/BL)	Test Input (FBS)
2B	418 (GN/R)	Test Input (TBS)
2C	–	NOT USED
2D	–	NOT USED
2E	–	NOT USED
2F	20 (W/BK)	Generator Voltage
2G	–	NOT USED
2H	406 (BL/O)	Pump Motor Relay Control
2J	400 (BK/BL)	Fail Safe Relay Control
2L	408 (PK)	ABS Indicator Control
2M	412 (Y)	Right Front Wheel Speed Sensor
2N	413 (O)	Right Front Wheel Speed Sensor
2O	411 (R)	Left Front Wheel Speed Sensor
2P	410 (W)	Left Front Wheel Speed Sensor
2Q	414 (Y/GN)	Left Rear Wheel Speed Sensor
2R	415 (Y/BL)	Left Rear Wheel Speed Sensor
2S	417 (BL)	Right Rear Wheel Speed Sensor
2T	416 (GN)	Right Rear Wheel Speed Sensor

ABS Control Module

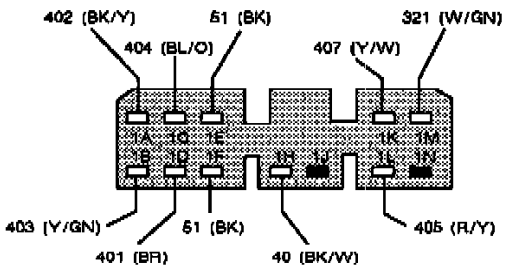

C222
ABS CONTROL MODULE

PIN	CIRCUIT	CIRCUIT FUNCTION
1A	402 (BK/Y)	Right Rear Solenoid Valve Control
1B	403 (Y/GN)	Left Front Solenoid Valve Control
1C	404 (BL/O)	Right Front Solenoid Valve Control
1D	401 (BR)	Left Rear Solenoid Valve Control
1E	51 (BK)	Module Ground
1F	51 (BK)	Module Ground
1H	40 (BK/W)	Module Power
1J	–	NOT USED
1K	407 (Y/W)	ABS Power Input
1L	405 (R/Y)	Pump Motor Power Input
1M	321 (W/GN)	Brake Pedal Depressed Input
1N	–	NOT USED

ABS Control Module

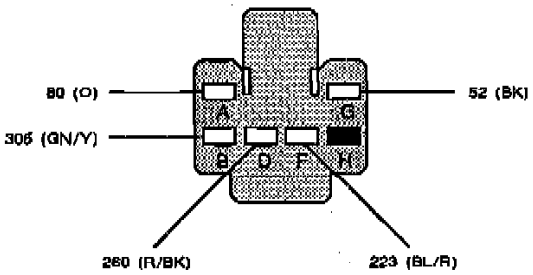

C237
FOG LAMP SWITCH

Fog Lamp Switch

Fuel Pump Relay

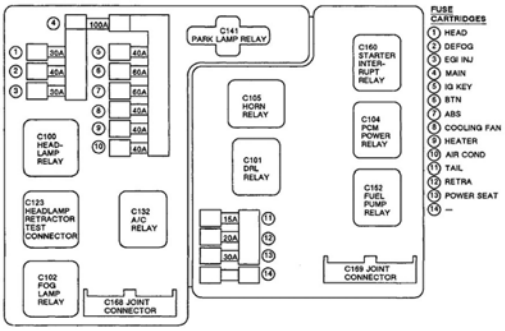

Engine Compartment Fuse Box (1 Of 2)

FUSE CARTRIDGE	AMPS	CIRCUITS PROTECTED
MAIN	100	ALL CIRCUITS (EXCEPT STARTER MOTOR, HEADLAMPS, FOG LAMPS, DAYTIME RUNNING LAMPS (DRL), REAR WINDOW DEFROST, AIR BAG RESTRAINT SYSTEM, AND ELECTRONIC ENGINE CONTROL)
HEAD	30	HEADLAMPS, FOG LAMPS, DAYTIME RUNNING LAMPS (DRL)
DEFOG	40	REAR WINDOW DEFROST
EGI INJ	30	AIR BAG RESTRAINT SYSTEM, ELECTRONIC ENGINE CONTROL
IG KEY	40	ALL CIRCUITS POWERED BY IGNITION SWITCH
BTN	60	HEADLAMP RETRACTORS, POWER SEAT, POWER LUMBAR SEAT, EXTERIOR LAMPS, WARNING CHIME, ILLUMINATED ENTRY, ANTI-THEFT, INTERIOR FUSE PANEL FUSES–HAZARD, AUDIO, ROOM, STOP, AND DOOR LOCK
ABS	60	ANTI-LOCK BRAKE SYSTEM (ABS)
COOLING FAN	40	COOLING FANS
HEATER	40	HEATER, AIR CONDITIONER-HEATER
AIR COND	40	AIR CONDITIONER-HEATER
TAIL	15	EXTERIOR LAMPS
RETRA	20	HEADLAMP RETRACTORS
POWER SEAT	30	POWER SEAT, POWER LUMBAR SEAT

Engine Compartment Fuse Box (2 Of 2)

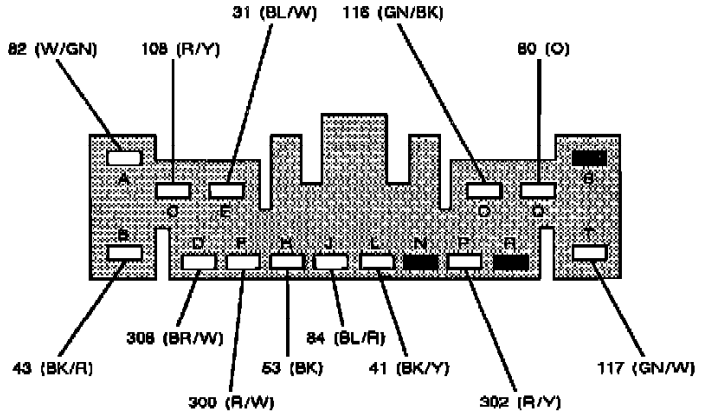

C201
INTERIOR FUSE PANEL

PIN	CIRCUIT	CIRCUIT FUNCTION
A	82 (W/GN)	Hot At All Times Power
B	43 (BK/R)	Run Power
C	108 (R/Y)	Backup Lamps
D	308 (BR/W)	Seatbelt Buckle Switch
E	31 (BL/W)	Acc/Run Power
F	300 (R/W)	Door Courtesy Lamp Switches
H	53 (BK)	Ground
J	84 (BL/R)	Hot At All Times Power
L	41 (BK/Y)	Start/Run Power
N	—	NOT USED
O	116 (GN/BK)	Left Rear Turn Lamp
P	302 (R/Y)	Outside Door Handle Switches
Q	80 (O)	Park/Side Marker/License Plate Lamps
R	—	NOT USED
S	—	NOT USED
T	117 (GN/W)	Right Rear Turn Lamp

Interior Fuse Panel

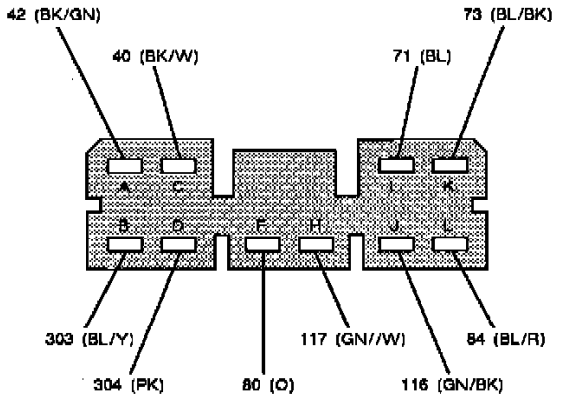

C214
INTERIOR FUSE PANEL

PIN	CIRCUIT	CIRCUIT FUNCTION
A	42 (BK/GN)	Start/Run Power
B	303 (BL/Y)	Ignition Key Reminder Switch Signal
C	40 (BK/W)	Start/Run Power
D	304 (PK)	Ignition/Door Key Cylinder Lamp Ground
F	80 (O)	Park Lamp Relay
H	117 (GN/W)	Right Front Combination Lamp
I	71 (BL)	Run Power
J	116 (GN/BK)	Left Front Combination Lamp
K	73 (BL/BK)	Acc/Run Power
L	84 (BL/R)	Hot At All Times Power

Interior Fuse Panel

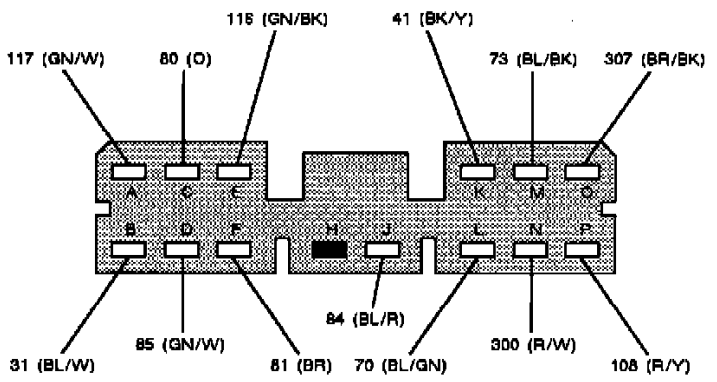

C215
INTERIOR FUSE PANEL

PIN	CIRCUIT	CIRCUIT FUNCTION
A	117 (GN/W)	Right Rear Turn Signal
B	31 (BL/W)	Acc/Run Power
C	80 (O)	Instrument Illumination
D	85 (GN/W)	Hot At All Times Power
E	116 (GN/BK)	Left Rear Turn Signal
F	81 (BR)	Hot At All Times Power
H	—	NOT USED
J	84 (BL/R)	Hot At All Times Power
K	41 (BK/Y)	Start/Run Power
L	70 (BL/GN)	Run Power
M	73 (BL/BK)	Acc/Run Power
N	300 (R/W)	Door Ajar Indicator
O	307 (BR/BK)	Fasten Seat Belt Indicator
P	108 (R/Y)	Back Up Lamps

Interior Fuse Panel

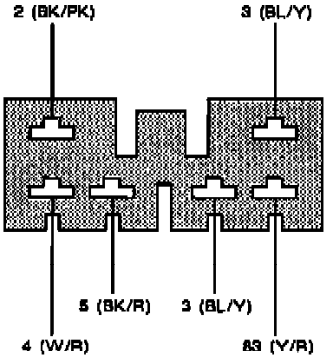

C216
INTERIOR FUSE PANEL

Interior Fuse Panel

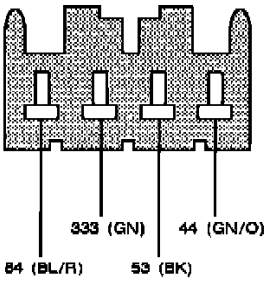

C217
INTERIOR FUSE PANEL

Interior Fuse Panel

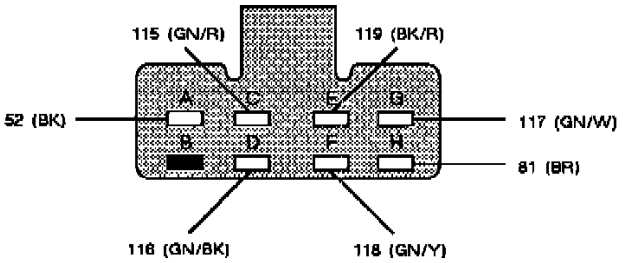

C243
FLASHER MODULE

Flasher Module

COMBINATION SWITCH

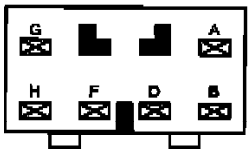

C207

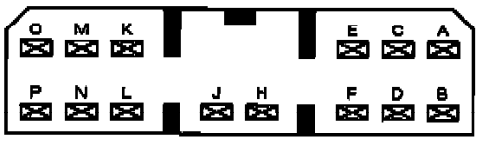

C225

Terminal ID

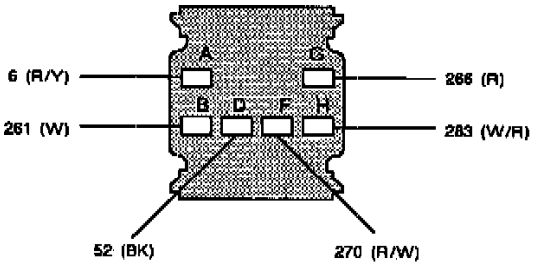

C205
HEADLAMP RETRACTOR CONTROL MODULE

Headlamp Retractor Control Module

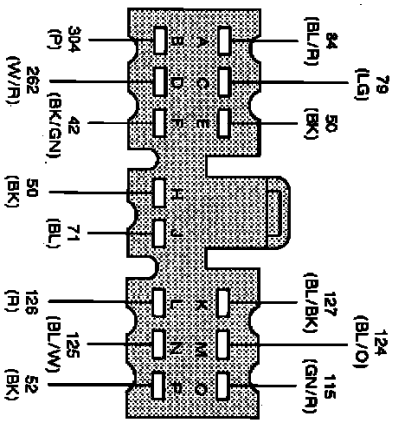

COMBINATION SWITCH

C207

PIN	CIRCUIT	CIRCUIT FUNCTION
A	260 (R/BK)	Dimmer Switch to Lo Beam Head-lamps
B	270 (R/W)	Dimmer Switch to Hi Beam Head-lamps
D	6 (R/Y)	Flash to Pass Power
F	261 (W)	Dimmer Switch Power Input
G	118 (GN/Y)	Left Turn Signal Output
H	119 (BK/R)	Right Turn Signal Output

C225

PIN	CIRCUIT	CIRCUIT FUNCTION
A	84 (BL/R)	Ignition Key Cylinder Lamp Power
B	304 (P)	Ignition Key Cylinder Lamp Control
C	79 (LG)	Park Lamp Relay Control
D	262 (W/R)	Headlamp Relay Control
E	50 (BK)	Main Light Switch Ground
F	42 (BK/GN)	Turn Signal Switch Power
H	50 (BK)	Windshield Wiper/Washer Switch Ground
J	71 (BL)	Winshield Wiper/Washer Switch Power
K	127 (BL/BK)	Wiper Motor Park Switch
L	126 (R)	Wiper Motor Hi Speed Output
M	124 (BL/O)	Washer Motor Output
N	125 (BL/W)	Wiper Motor Lo Speed Output
O	115 (GN/R)	Hazard Switch Output
P	52 (BK)	Hazard Switch Ground

Combination Switch

COMBINATION SWITCH

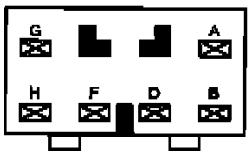

C207

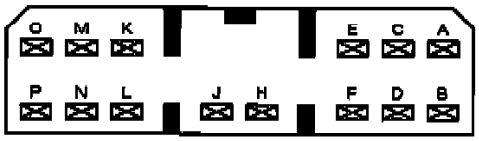

C225

Terminal ID

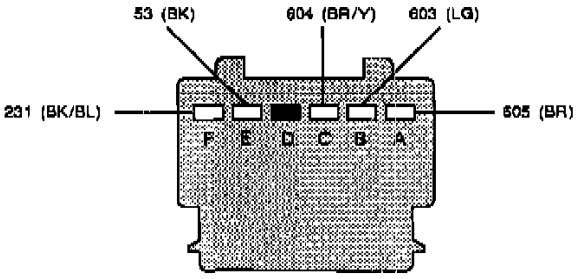

C503

LEFT POWER/HEATED MIRROR

Left Power/Heated Mirror

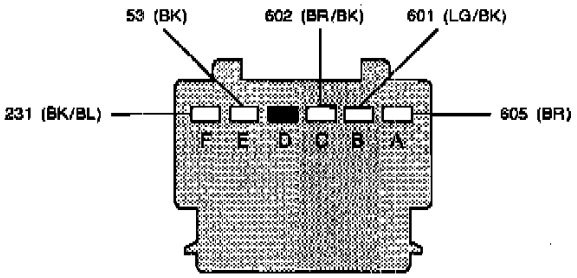

C603

RIGHT POWER/HEATED MIRROR

Right Power/Heated Mirror

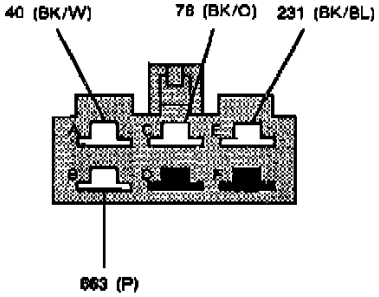

C166

REAR WINDOW DEFROST RELAY

Rear Window Defrost Relay

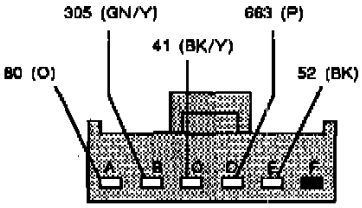

C238

REAR WINDOW DEFROST SWITCH

Rear Window Defrost Switch

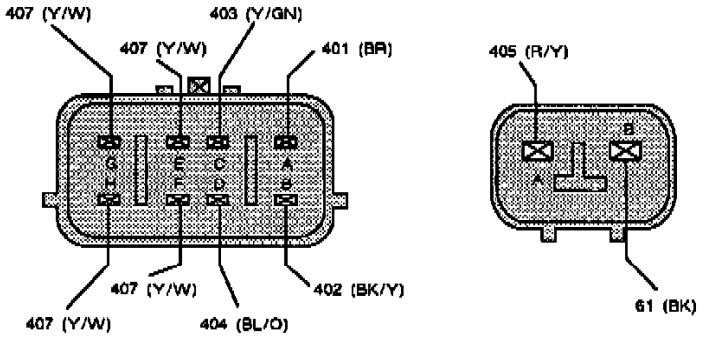

ABS HYDRAULIC UNIT

ABS Hydraulic Unit

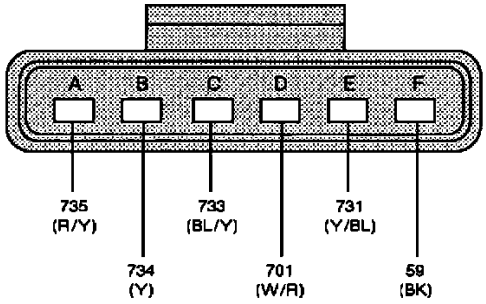

C160
IGNITION CONTROL MODULE (ICM)
(2.0L MANUAL)

Ignition Coil Module (ICM)

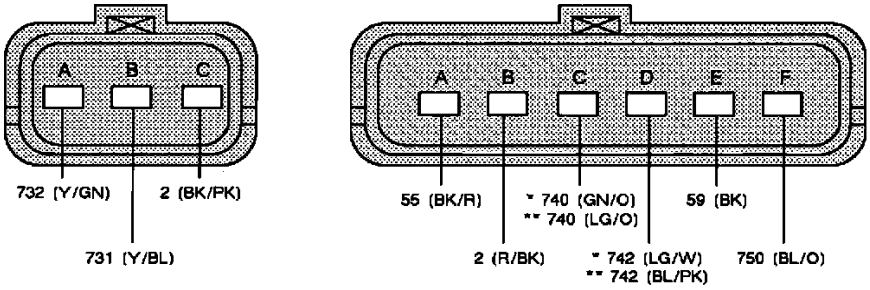

DISTRIBUTOR
(2.0L AUTOMATIC, 2.5L)

* 2.0L
** 2.5L

Distributor

Ignition Lock

For Connector Views, please refer to: Ignition Switch/Diagrams, See: Powertrain Management/Ignition System/Sensors and Switches - Ignition System/Ignition Switch/Diagrams/Connector Views

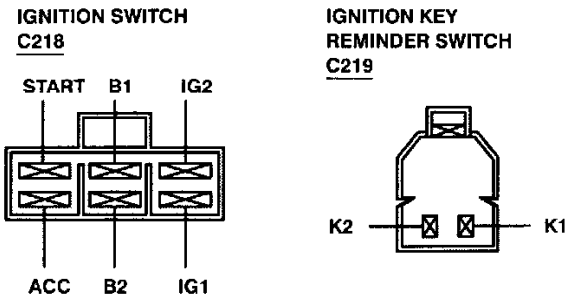

Ignition Switch - Terminal Locations

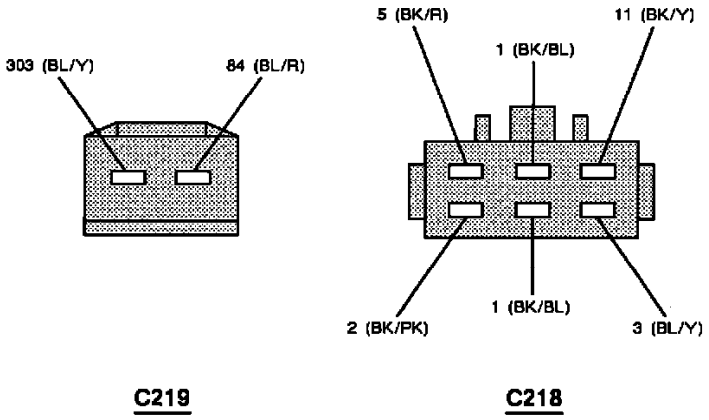

Ignition Switch

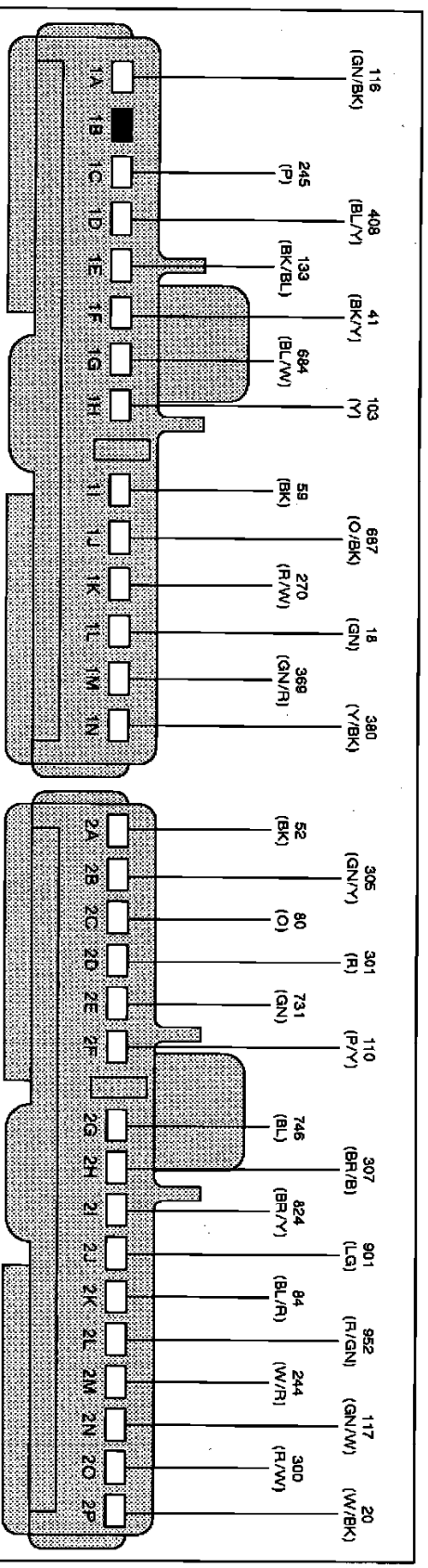

C241

PIN NUMBER	CIRCUIT	CIRCUIT FUNCTION
1A	116 (GN/BK)	Left Turn Indicator Input
1B	-	NOT USED
1C	245 (P)	Low Washer Fluid Indicator Input
1D	408 (BL/Y)	ABS Indicator Input
1E	133 (BK/BL)	Temperature Gauge Input
1F	41 (BK/Y)	Instrument Cluster Power
1G	684 (BL/W)	VSS (+)
1H	103 (Y)	Fuel Gauge Input
1I	59 (BK)	Instrument Cluster Ground
1J	687 (O/BK)	VSS (-)
1K	270 (R/W)	Hi Beam Indicator Input
1L	18 (GN)	Bulb Test Input
1M	369 (GN/R)	Vehicle Speed Signal Output
1N	380 (Y/BK)	Brake Indicator Input

C240

PIN NUMBER	CIRCUIT	CIRCUIT FUNCTION
2A	52 (BK)	Instrument Cluster Ground
2B	305 (GN/Y)	Illumination Lamps Dimmer Control
3C	80 (O)	Illumination Lamps Power
2D	301 (R)	Liftgate Open Input
2E	731 (GN)	Tachometer Input
2F	110 (P/Y)	Oil Pressure Gauge Input
2G	746 (BL)	Malfunction Indicator Lamp Input
2H	307 (BR/B)	Fasten Seat Belt Indicator Input
2I	824 (BR/Y)	Overdrive Off Input
2J	901 (LG)	Anti-theft Indicator Input
2K	84 (BL/R)	Anti-theft Indicator Power
2L	952 (R/GN)	Air Bag Indicator Input
2M	244 (W/R)	Fuel Cutout Indicator Input
2N	117 (GN/W)	Right Turn Indicator Input
2O	300 (R/W)	Door Open Input
2P	20 (W/BK)	Alternator Output Low Input

Instrument Cluster

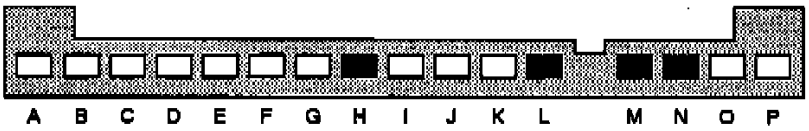

C213
CENTRAL PROCESSING UNIT (CPU)

PIN	CIRCUIT FUNCTION
A	Switched Power
B	Fasten Seat Belt Indicator Output
C	Battery Power
D	Module Ground
E	Door Courtesy Lamp Switches Input
F	Courtesy Lamps Output
G	Key Cylinder Lamps Output
H	NOT USED
I	Ignition Key Reminder Switches Input
J	Outside Door Handle Switches Input
K	Seat Belt Buckle Switch Input
L	NOT USED
M	NOT USED
N	NOT USED
O	Backup Lamp Switch Input
P	Park and Headlamps On Input

Central Processing Unit (CPU)

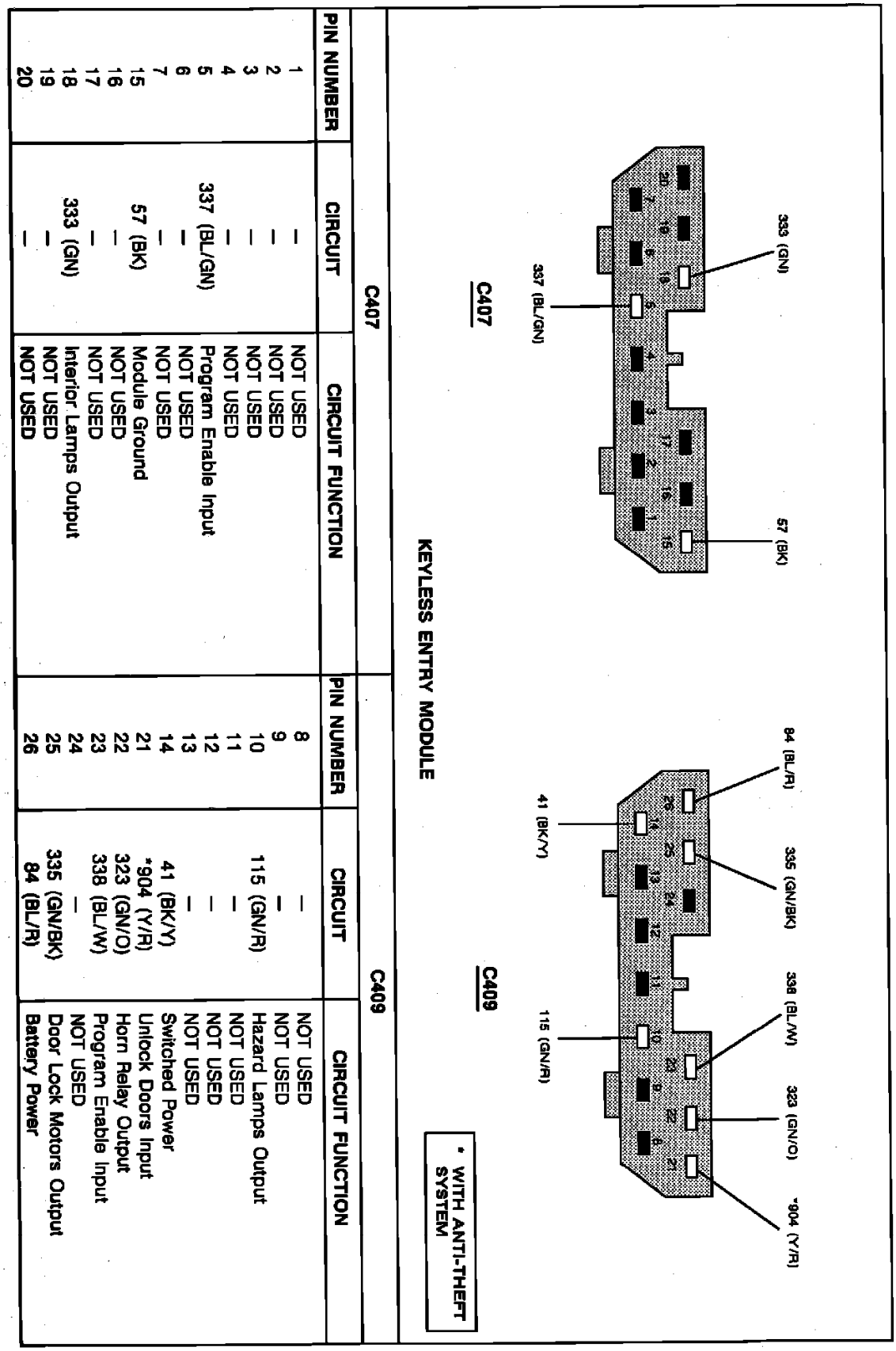

KEYLESS ENTRY MODULE

C407

PIN NUMBER	CIRCUIT	CIRCUIT FUNCTION
1	—	NOT USED
2	—	NOT USED
3	—	NOT USED
4	—	NOT USED
5	337 (BL/GN)	Program Enable Input
6	—	NOT USED
7	—	NOT USED
15	57 (BK)	Module Ground
16	—	NOT USED
17	—	NOT USED
18	333 (GN)	Interior Lamps Output
19	—	NOT USED
20	—	NOT USED

C409

PIN NUMBER	CIRCUIT	CIRCUIT FUNCTION
8	—	NOT USED
9	—	NOT USED
10	115 (GN/R)	Hazard Lamps Output
11	—	NOT USED
12	—	NOT USED
13	—	NOT USED
14	41 (BK/Y)	Switched Power
21	*904 (Y/R)	Unlock Doors Input
22	323 (GN/O)	Horn Relay Output
23	338 (BL/W)	Program Enable Input
24	—	NOT USED
25	335 (GN/BK)	Door Lock Motors Output
26	84 (BL/R)	Battery Power

Keyless Entry Module

Neutral Start Relay (Inhibitor Relay)

For Connector Views, please refer to: Starter Relay/Diagrams, See: Relays and Modules/Relays and Modules - Starting and Charging/Starter Relay/Diagrams

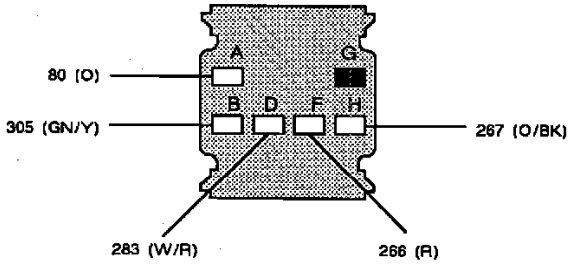

C285
HEADLAMP RETRACTOR SWITCH

Headlamp Retractor Switch

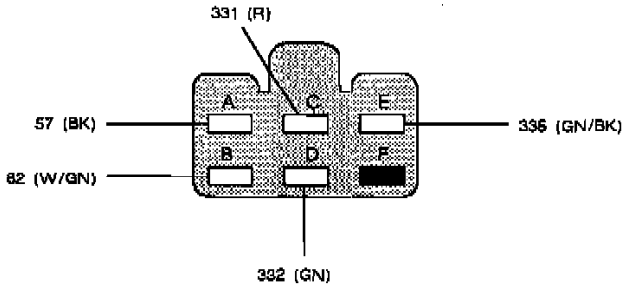

C290
POWER DOOR LOCK RELAY

Power Door Lock Relay

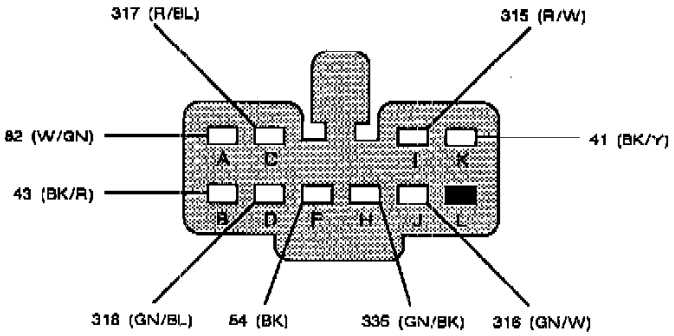

C502
MAIN WINDOW CONTROL/DOOR PANEL LOCK SWITCH

PIN	CIRCUIT	CIRCUIT FUNCTION
A	82 (W/GN)	Door Lock Switch Power
B	43 (BK/R)	Window Switch Power
C	317 (R/BL)	Left Window Motor Feed/Return
D	318 (GN/BL)	Left Window Motor Feed/Return
F	54 (BK)	Window Switch Ground
H	335 (GN/BK)	Door Lock/Unlock Output
I	315 (R/W)	Right Window Motor Feed/Return
J	316 (GN/W)	Right Window Motor Feed/Return
K	41 (BK/Y)	Switched Power
L	—	NOT USED

Main Window Control/Door Panel Lock Switch

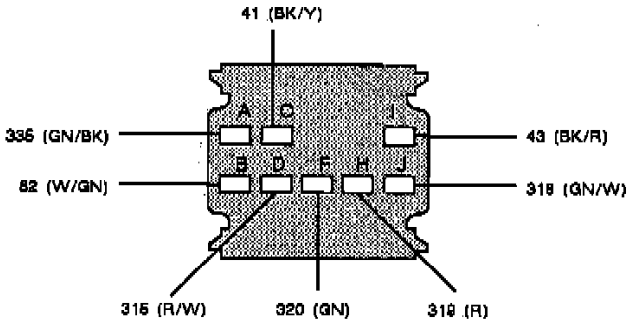

C602
RIGHT WINDOW/DOOR PANEL LOCK SWITCH

Right Window/Door Panel Lock Switch

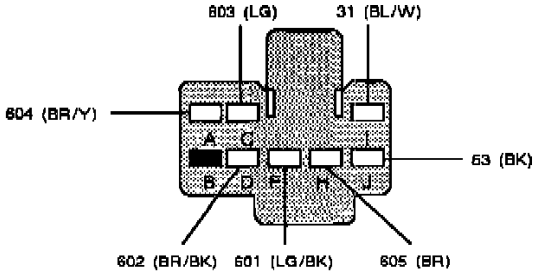

C507
POWER MIRROR SWITCH

Power Mirror Switch

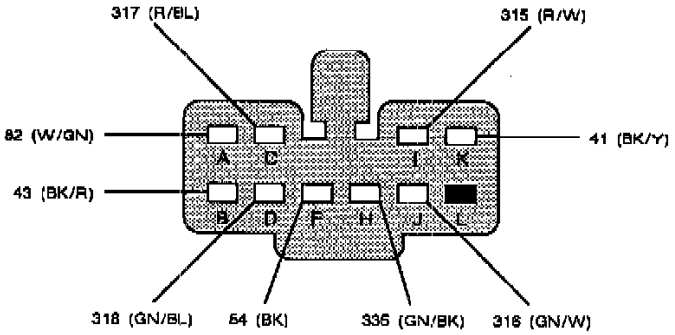

C502
MAIN WINDOW CONTROL/DOOR PANEL LOCK SWITCH

PIN	CIRCUIT	CIRCUIT FUNCTION
A	82 (W/GN)	Door Lock Switch Power
B	43 (BK/R)	Window Switch Power
C	317 (R/BL)	Left Window Motor Feed/Return
D	318 (GN/BL)	Left Window Motor Feed/Return
F	54 (BK)	Window Switch Ground
H	335 (GN/BK)	Door Lock/Unlock Output
I	315 (R/W)	Right Window Motor Feed/Return
J	318 (GN/W)	Right Window Motor Feed/Return
K	41 (BK/Y)	Switched Power
L	—	NOT USED

Main Window Control/Door Panel Lock Switch

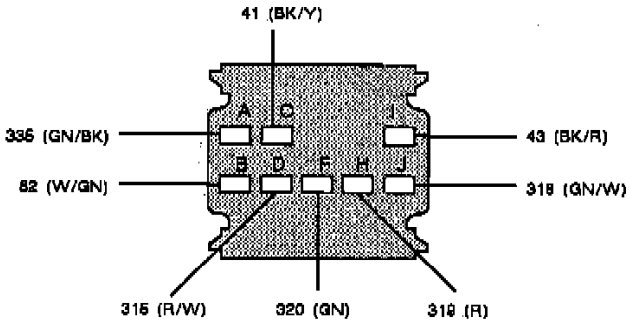

C602
RIGHT WINDOW/DOOR PANEL LOCK SWITCH

Right Window/Door Panel Lock Switch

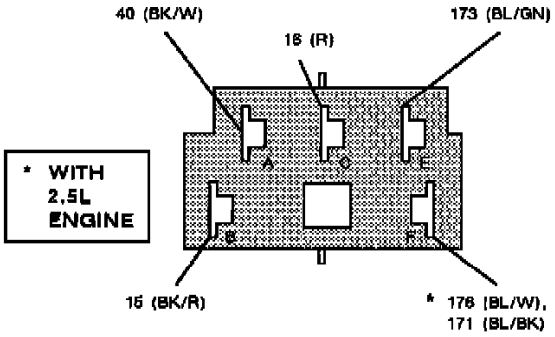

C144
HIGH SPEED COOLING FAN RELAY

High Speed Cooling Fan Relay

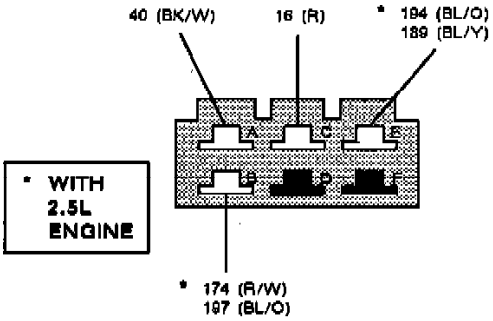

C167
LOW SPEED COOLING FAN RELAY

Low Speed Cooling Fan Relay

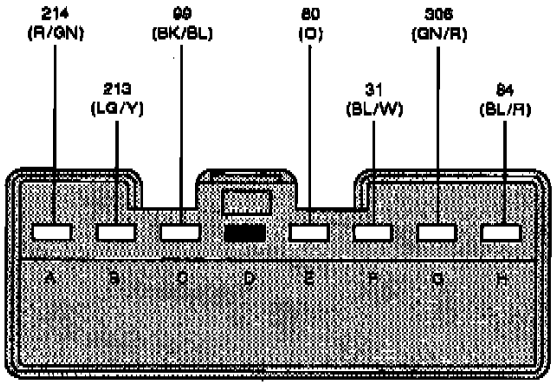

C211
RADIO (ALL)

PIN	CIRCUIT	CIRCUIT FUNCTION
A	214 (R/GN)	Amplifier Mute
B	213 (LG/Y)	Radio ON Signal
C	99 (BK/BL)	Ground
D	–	NOT USED
E	80 (O)	Illumination Power
F	31 (BL/W)	Switched Power
G	306 (GN/R)	Illumination Return
H	84 (BL/R)	Memory Power

Radio (All)

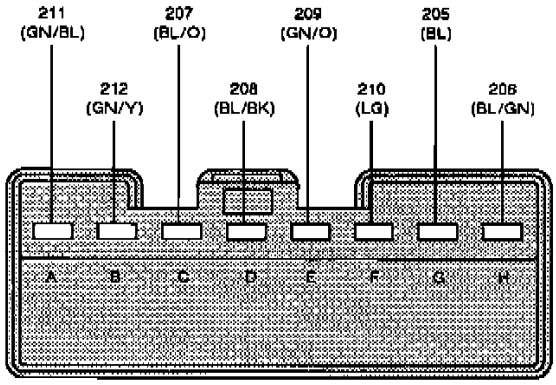

C212
RADIO (BASE)

PIN	CIRCUIT	CIRCUIT FUNCTION
A	211 (GN/BL)	Right Rear Speaker (–)
B	212 (GN/Y)	Right Rear Speaker(+)
C	207 (BL/O)	Right Front Door Speaker(–)
D	208 (BL/BK)	Right Front Door Speaker(+)
E	209 (GN/O)	Left Rear Speaker(–)
F	210 (LG)	Left Rear Speaker(+)
G	205 (BL)	Left Front Door Speaker(–)
H	206 (BL/GN)	Left Front Door Speaker(+)

Radio (Base)

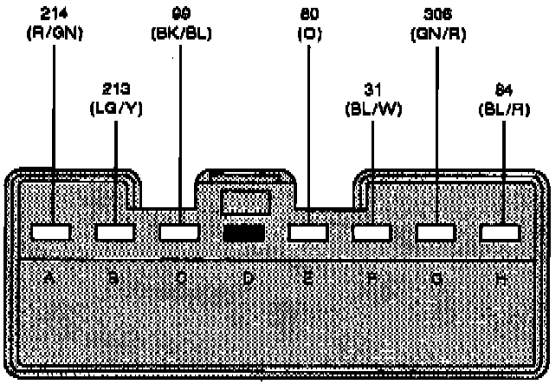

C211
RADIO (ALL)

PIN	CIRCUIT	CIRCUIT FUNCTION
A	214 (R/GN)	Amplifier Mute
B	213 (LG/Y)	Radio ON Signal
C	99 (BK/BL)	Ground
D	–	NOT USED
E	80 (O)	Illumination Power
F	31 (BL/W)	Switched Power
G	306 (GN/R)	Illumination Return
H	84 (BL/R)	Memory Power

Radio (All)

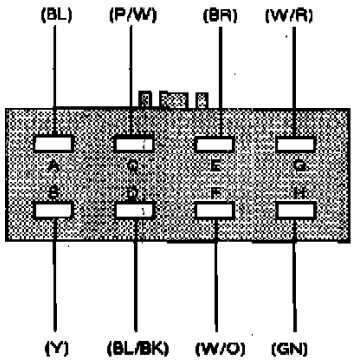

C291
RADIO (WITH PREMIUM SOUND)

PIN	CIRCUIT	CIRCUIT FUNCTION
A	(BL)	Right Rear Speaker (–) Output
B	(Y)	Left Rear Speaker (–) Output
C	(P/W)	Right Rear Speaker (+) Output
D	(BL/BK)	Left Rear Speaker (+) Output
E	(BR)	Right Front Speaker (–) Output
F	(W/O)	Left Front Speaker (–) Output
G	(W/R)	Right Front Speaker (+) Output
H	(GN)	Left Front Speaker (+) Output

Radio (With Premium Sound)

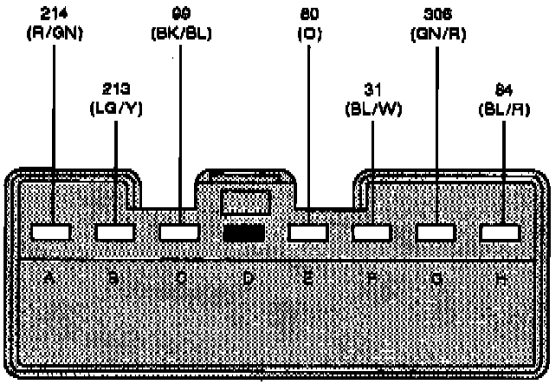

C211
RADIO (ALL)

PIN	CIRCUIT	CIRCUIT FUNCTION
A	214 (R/GN)	Amplifier Mute
B	213 (LG/Y)	Radio ON Signal
C	99 (BK/BL)	Ground
D	–	NOT USED
E	80 (O)	Illumination Power
F	31 (BL/W)	Switched Power
G	306 (GN/R)	Illumination Return
H	84 (BL/R)	Memory Power

Radio (All)

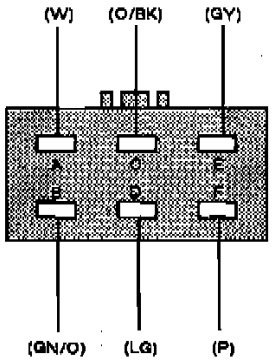

C292
RADIO (WITH GRAPHIC EQUALIZER)

PIN	CIRCUIT	CIRCUIT FUNCTION
A	(W)	Equilizer Status
B	(GN/O)	Signal Return
C	(O/BK)	RH Output to Equalizer
D	(LG)	LH Output to Equalizer
E	(GY)	RH Input to Radio
F	(P)	LH Input to Radio

Radio (With Graphic Equalizer

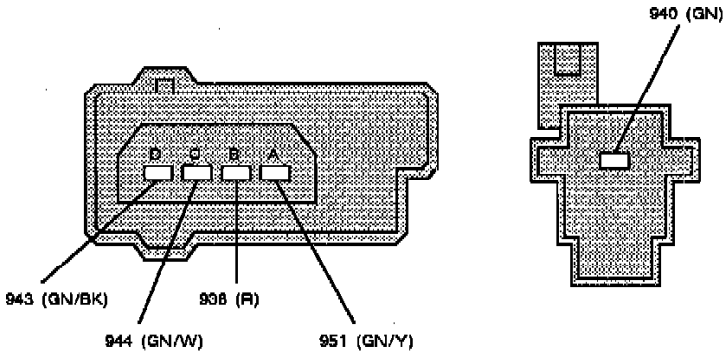

C260 C261

SAFING SENSOR

Safing Sensor

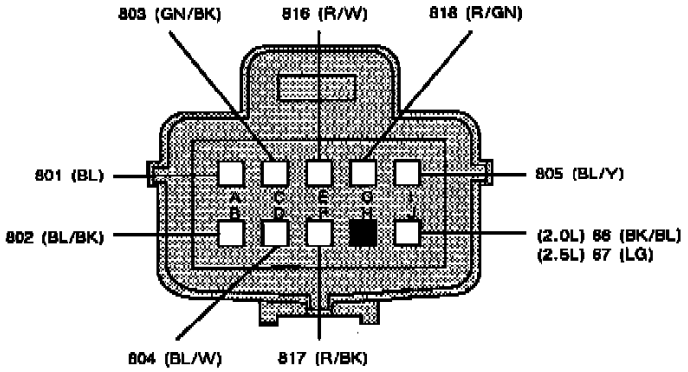

C1012

TRANSAXLE CONTROL SOLENOID VALVE

Transaxle Control Solenoid Valve

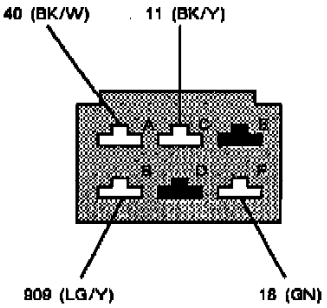

C160

STARTER INTERRUPT RELAY

(IN ENGINE COMPARTMENT FUSE BOX)

Starter Interrupt Relay

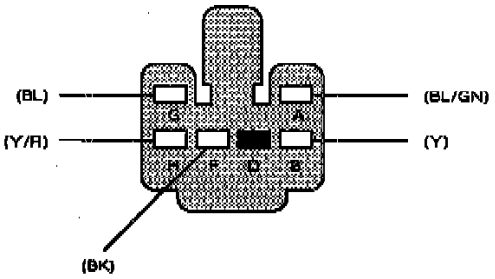

C907

MOONROOF MOTOR ASSEMBLY

Moonroof Motor Assembly

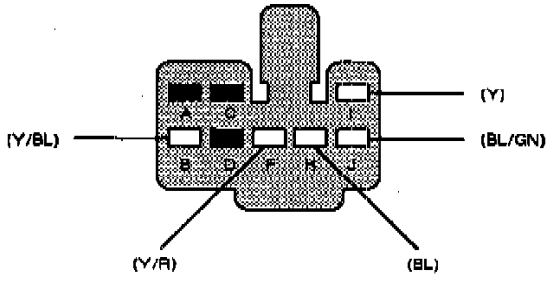

C906
MOONROOF RELAY

Moonroof Relay

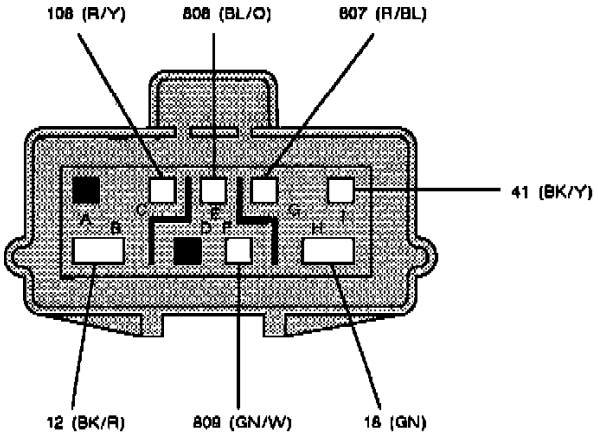

C161
MANUAL LEVER POSITION SWITCH (MLPS)

Manual Lever Position Switch (MLPS)

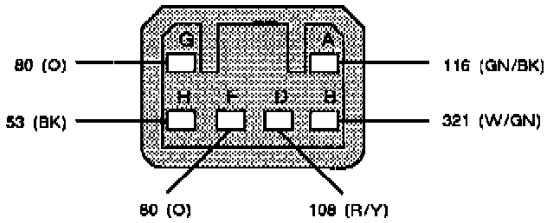

C401
LEFT REAR COMBINATION LAMP

Left Rear Combination Lamp

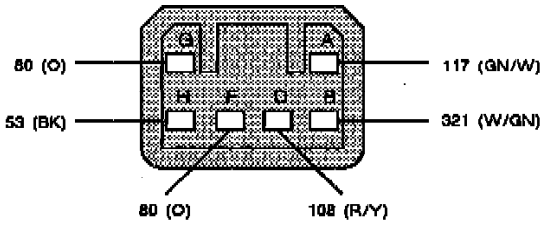

C402
RIGHT REAR COMBINATION LAMP

Right Rear Combination Lamp

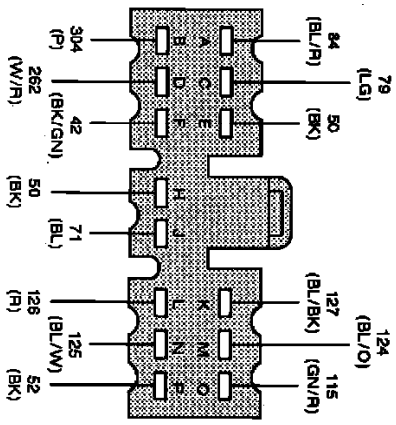

COMBINATION SWITCH

C207

PIN	CIRCUIT	CIRCUIT FUNCTION
A	260 (R/BK)	Dimmer Switch to Lo Beam Head-lamps
B	270 (R/W)	Dimmer Switch to Hi Beam Head-lamps
D	6 (R/Y)	Flash to Pass Power
F	261 (W)	Dimmer Switch Power Input
G	118 (GN/Y)	Left Turn Signal Output
H	119 (BK/R)	Right Turn Signal Output

C225

PIN	CIRCUIT	CIRCUIT FUNCTION
A	84 (BL/R)	Ignition Key Cylinder Lamp Power
B	304 (P)	Ignition Key Cylinder Lamp Control
C	79 (LG)	Park Lamp Relay Control
D	262 (W/R)	Headlamp Relay Control
E	50 (BK)	Main Light Switch Ground
F	42 (BK/GN)	Turn Signal Switch Power
H	50 (BK)	Windshield Wiper/Washer Switch Ground
J	71 (BL)	Winshield Wiper/Washer Switch Power
K	127 (BL/BK)	Wiper Motor Park Switch
L	126 (R)	Wiper Motor Hi Speed Output
M	124 (BL/O)	Washer Motor Output
N	125 (BL/W)	Wiper Motor Lo Speed Output
O	115 (GN/R)	Hazard Switch Output
P	52 (BK)	Hazard Switch Ground

Combination Switch

COMBINATION SWITCH

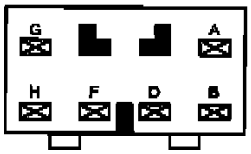

C207

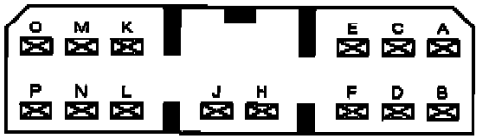

C225

Terminal ID

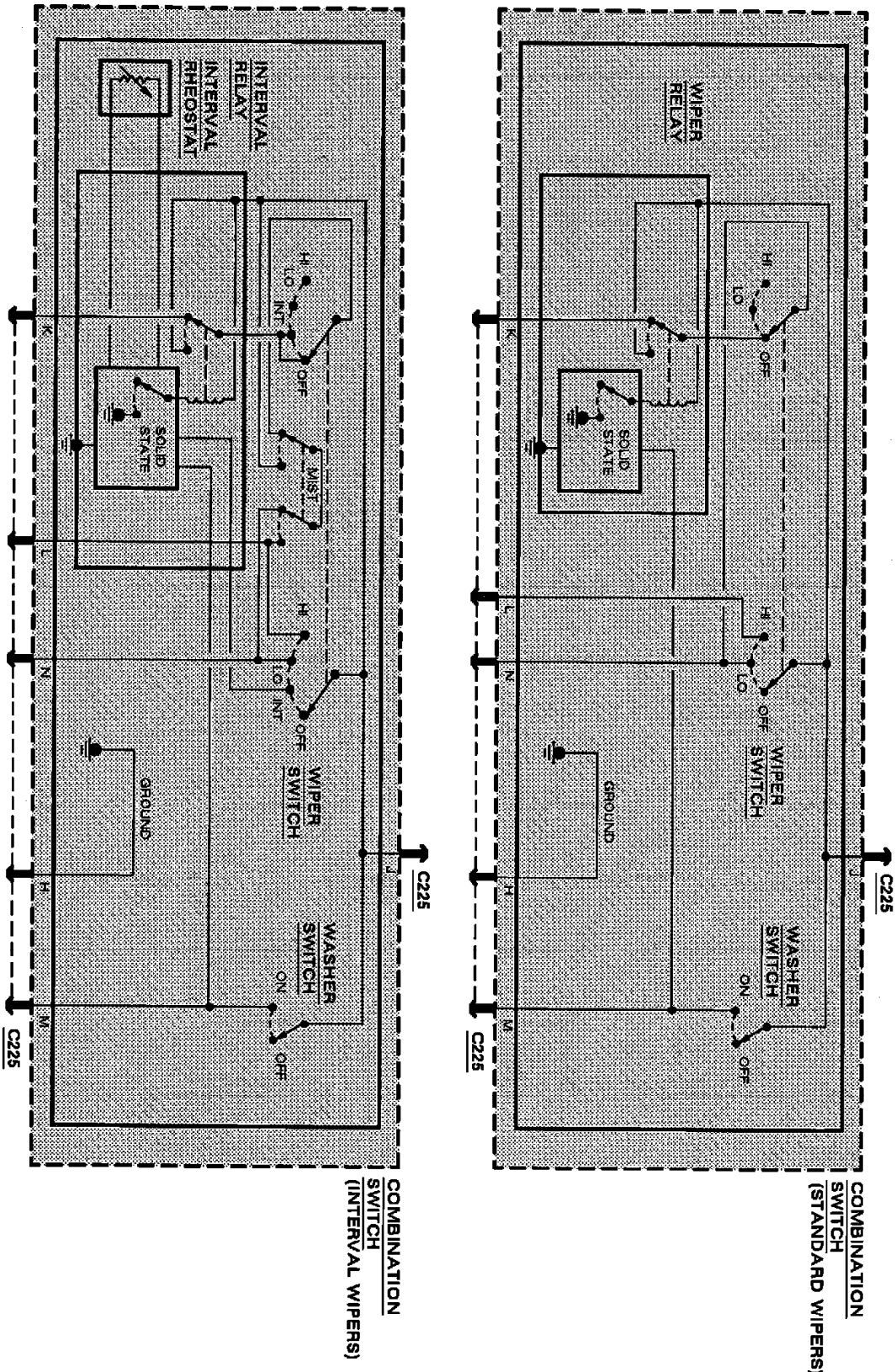
WIPER RELAY
HI
LO
OFF
SOLID STATE
K
L
N
H
M
C225
J
WIPER SWITCH
HI
LO
OFF
WASHER SWITCH
ON
OFF
GROUND
COMBINATION SWITCH (STANDARD WIPERS)
INTERVAL RELAY
INTERVAL RHEOSTAT
HI
LO
INT
OFF
MIST
SOLID STATE
WIPER SWITCH
WASHER SWITCH
ON
OFF
GROUND
COMBINATION SWITCH (INTERVAL WIPERS)

Schematic

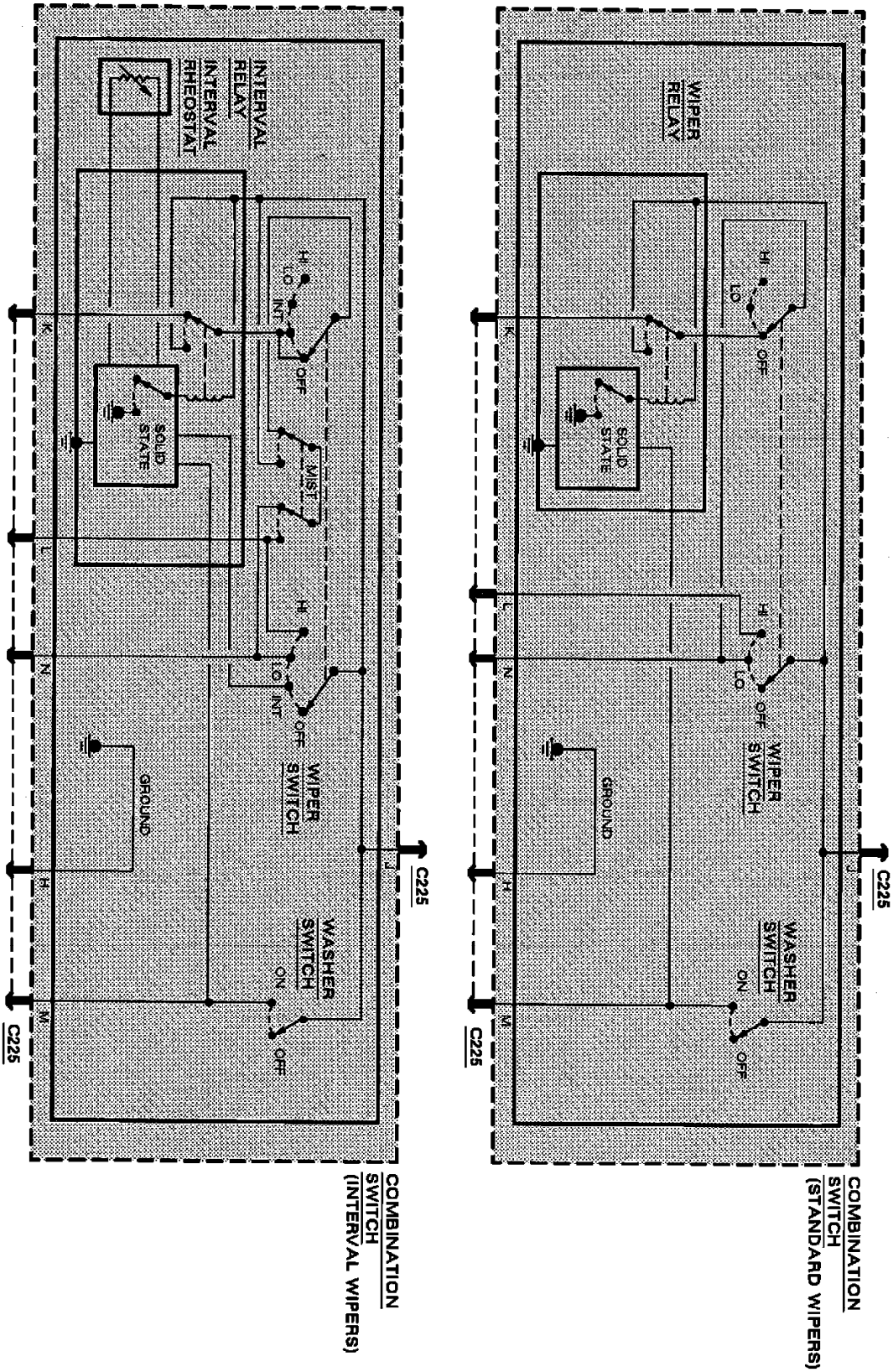

Schematic

Ground Circuit Diagram Notes

The ground circuits show how many different systems may share a common ground point.

While all of the ground circuits are shown complete, additional ground circuits may exit in the vehicle. Any ground circuit not shown is shown complete in the appropriate system schematic.

All wires are BK unless otherwise noted.

1993 Ford Probe L4-121 2.0L DOHC VIN A MFI

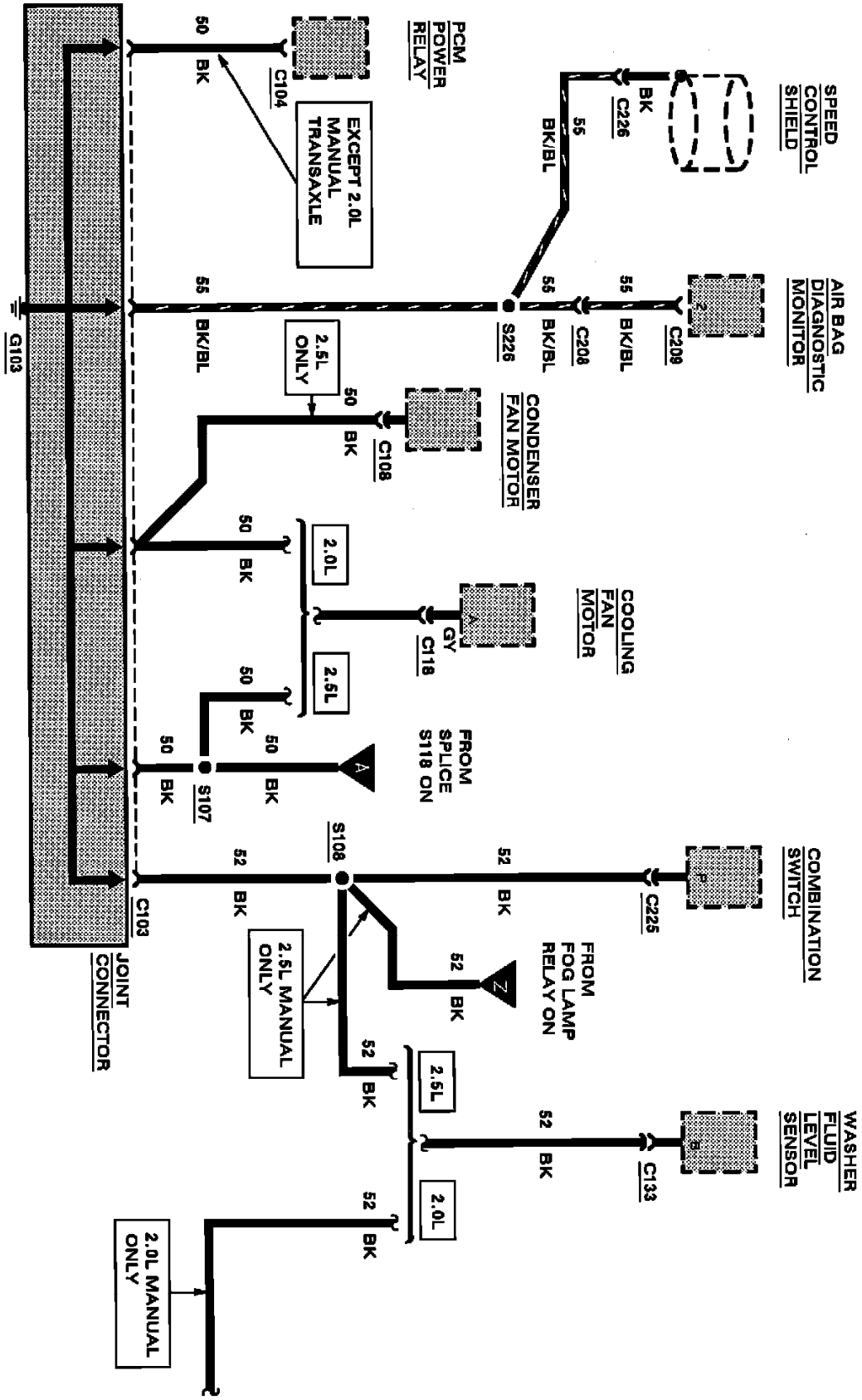

Grounds

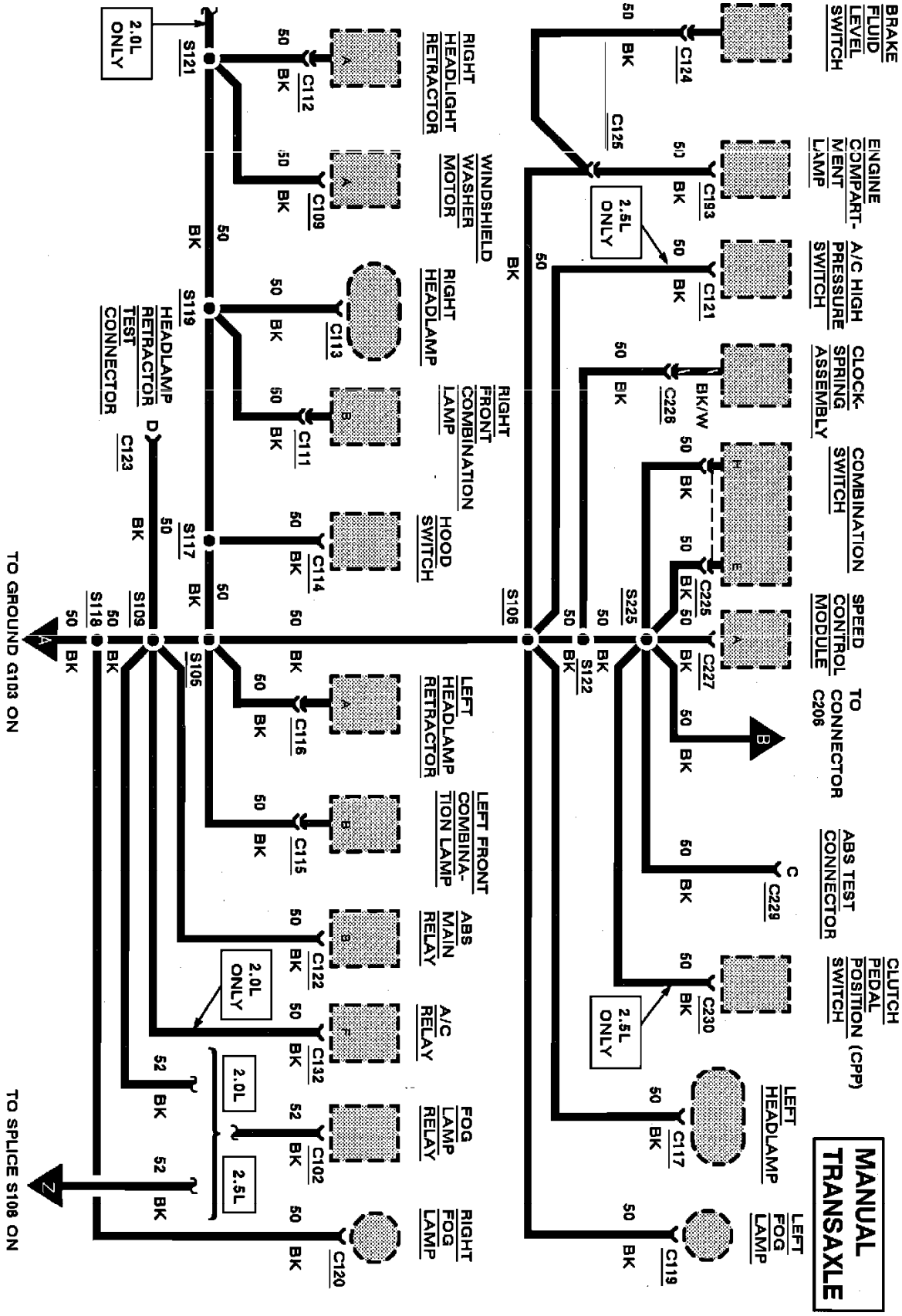
BRAKE FLUID LEVEL SWITCH
ENGINE COMPART-MENT LAMP
A/C HIGH PRESSURE SWITCH
CLOCK-SPRING ASSEMBLY
COMBINATION SWITCH
SPEED CONTROL MODULE
TO CONNECTOR C206
ABS TEST CONNECTOR
CLUTCH PEDAL POSITION (CPP) SWITCH
LEFT HEADLAMP
LEFT FOG LAMP
MANUAL TRANSAXLE
RIGHT HEADLIGHT RETRACTOR
WINDSHIELD WASHER MOTOR
RIGHT HEADLAMP
RIGHT FRONT COMBINATION LAMP
HOOD SWITCH
LEFT HEADLAMP RETRACTOR
LEFT FRONT COMBINA-TION LAMP
ABS MAIN RELAY
A/C RELAY
FOG LAMP RELAY
RIGHT FOG LAMP
HEADLAMP RETRACTOR TEST CONNECTOR
2.0L ONLY
2.5L ONLY
TO GROUND G103 ON
TO SPLICE S108 ON

Grounds

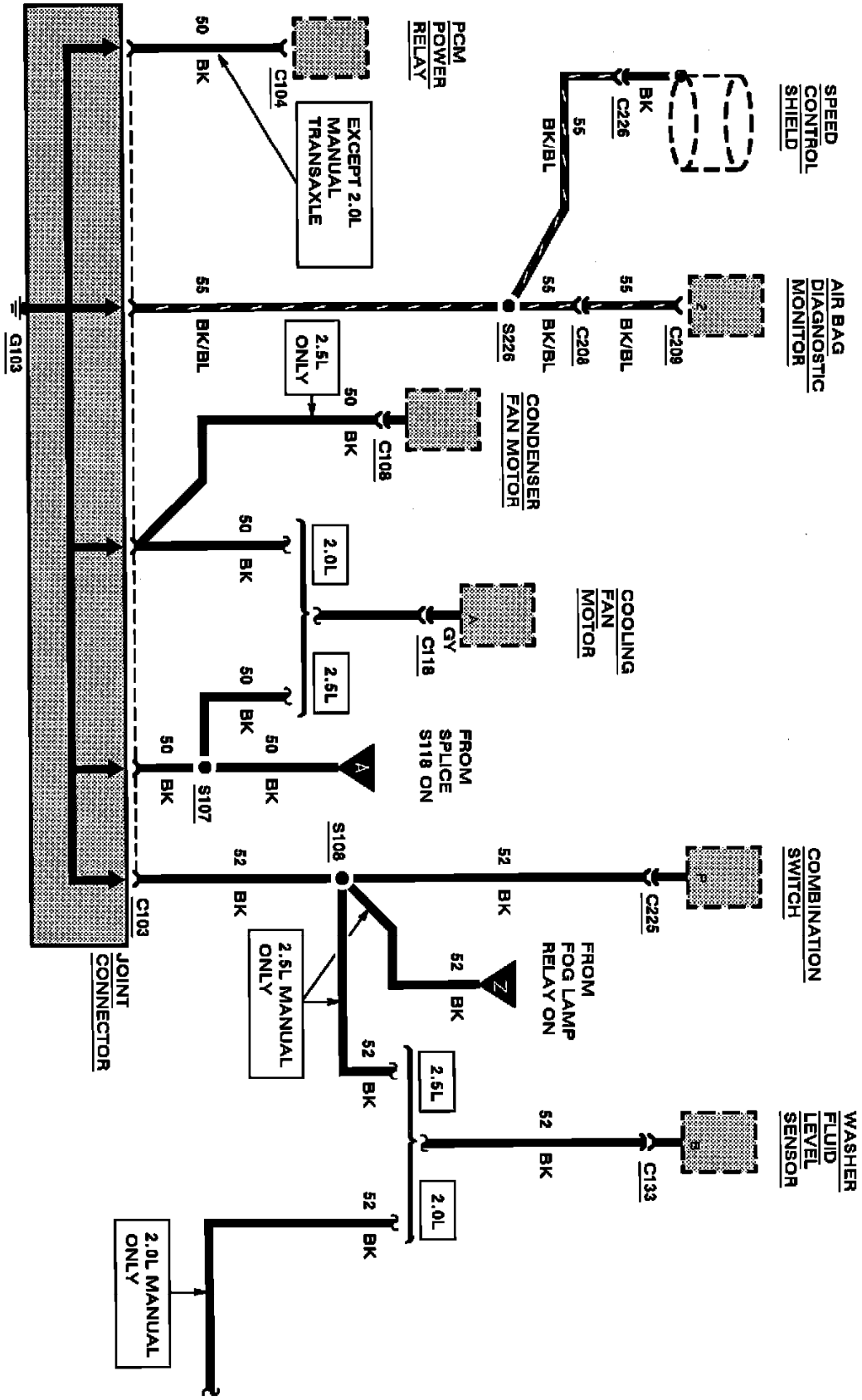
SPEED CONTROL SHIELD
C226
BK
55
BK/BL
AIR BAG DIAGNOSTIC MONITOR
C209
C208
S226
PCM POWER RELAY
C104
50
BK
EXCEPT 2.0L MANUAL TRANSAXLE
G103
2.5L ONLY
CONDENSER FAN MOTOR
C108
2.0L
2.5L
COOLING FAN MOTOR
C118
GY
FROM SPLICE S118 ON
S107
S108
COMBINATION SWITCH
C225
52
FROM FOG LAMP RELAY ON
2.5L MANUAL ONLY
C103
JOINT CONNECTOR
WASHER FLUID LEVEL SENSOR
C133
2.0L MANUAL ONLY

Grounds

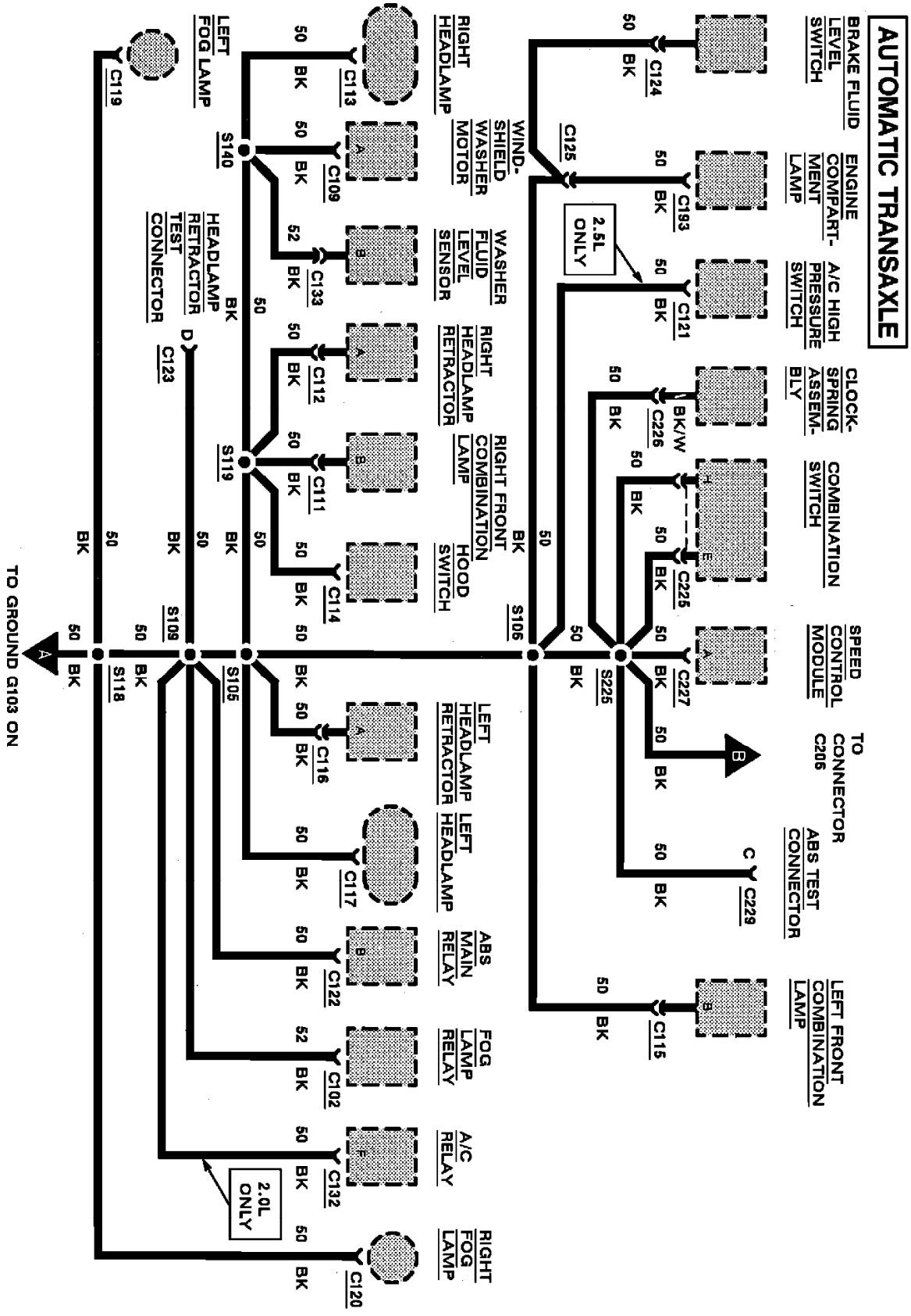
AUTOMATIC TRANSAXLE
BRAKE FLUID LEVEL SWITCH
ENGINE COMPARTMENT LAMP
A/C HIGH PRESSURE SWITCH
CLOCK-SPRING ASSEMBLY
COMBINATION SWITCH
SPEED CONTROL MODULE
TO CONNECTOR C206
ABS TEST CONNECTOR
LEFT FRONT COMBINATION LAMP
C124
C193
C121
C226
C225
C227
C229
C115
C125
2.5L ONLY
WIND-SHIELD WASHER MOTOR
WASHER FLUID LEVEL SENSOR
RIGHT HEADLAMP RETRACTOR
RIGHT FRONT COMBINATION LAMP
HOOD SWITCH
RIGHT HEADLAMP
C113
C109
C133
C112
C111
C114
S106
S225
S140
S119
LEFT FOG LAMP
HEADLAMP RETRACTOR TEST CONNECTOR
C123
C119
S109
S118
S105
LEFT HEADLAMP RETRACTOR
LEFT HEADLAMP
ABS MAIN RELAY
FOG LAMP RELAY
A/C RELAY
RIGHT FOG LAMP
C116
C117
C122
C102
C132
C120
2.0L ONLY
TO GROUND G103 ON

Grounds

1993 Ford Probe L4-121 2.0L DOHC VIN A MFI

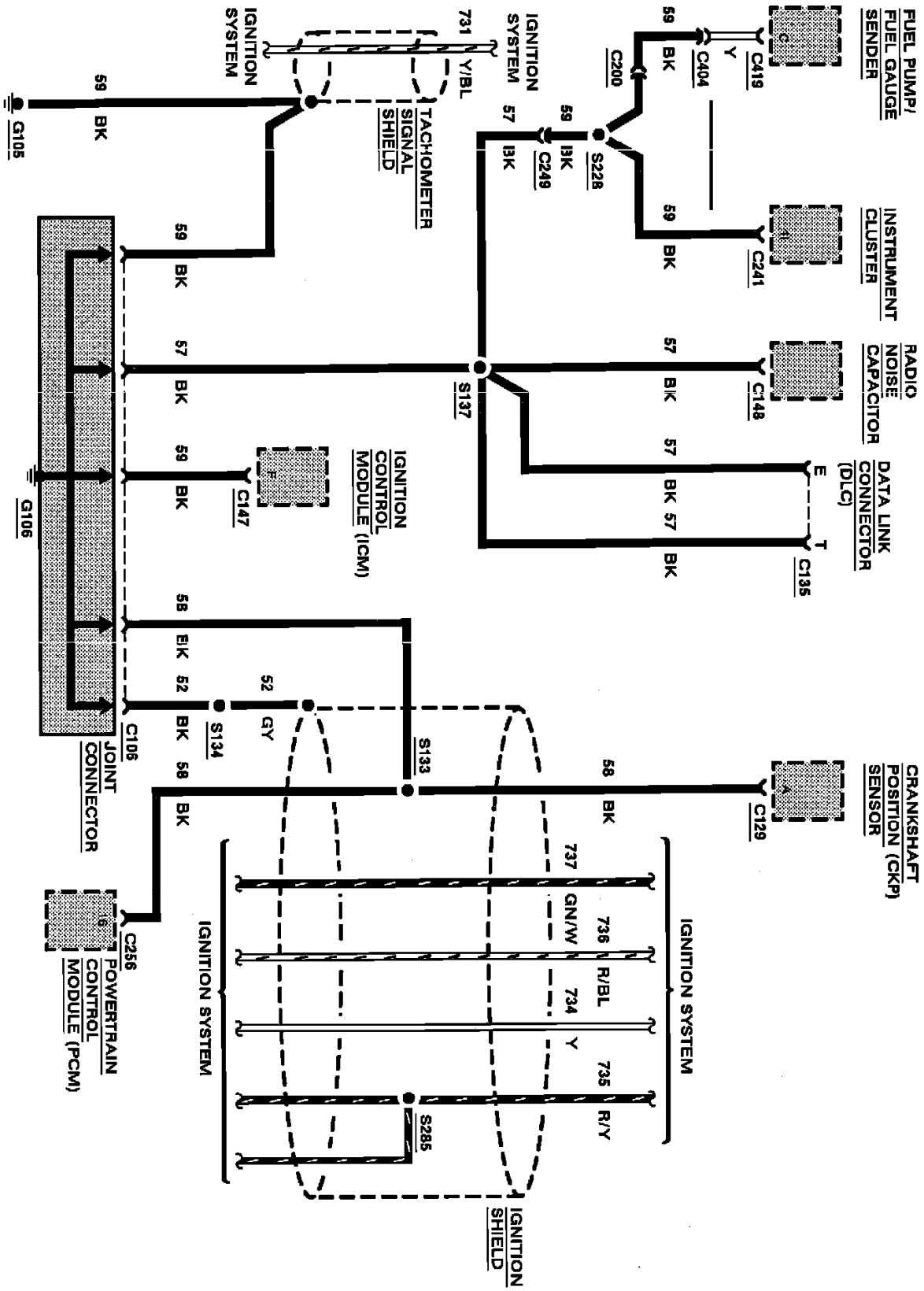

Grounds

1993 Ford Probe L4-121 2.0L DOHC VIN A MFI

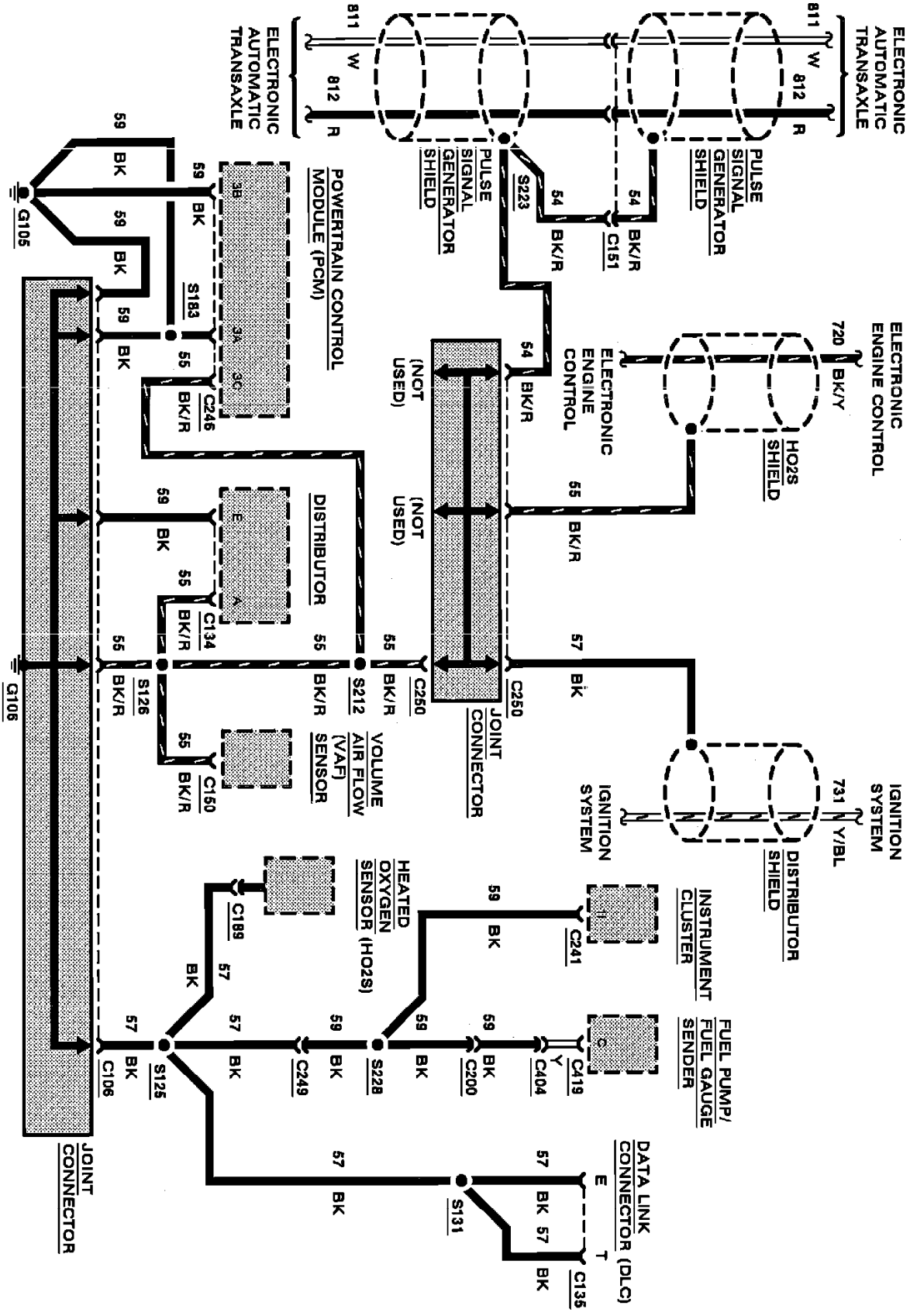

Grounds

1993 Ford Probe L4-121 2.0L DOHC VIN A MFI

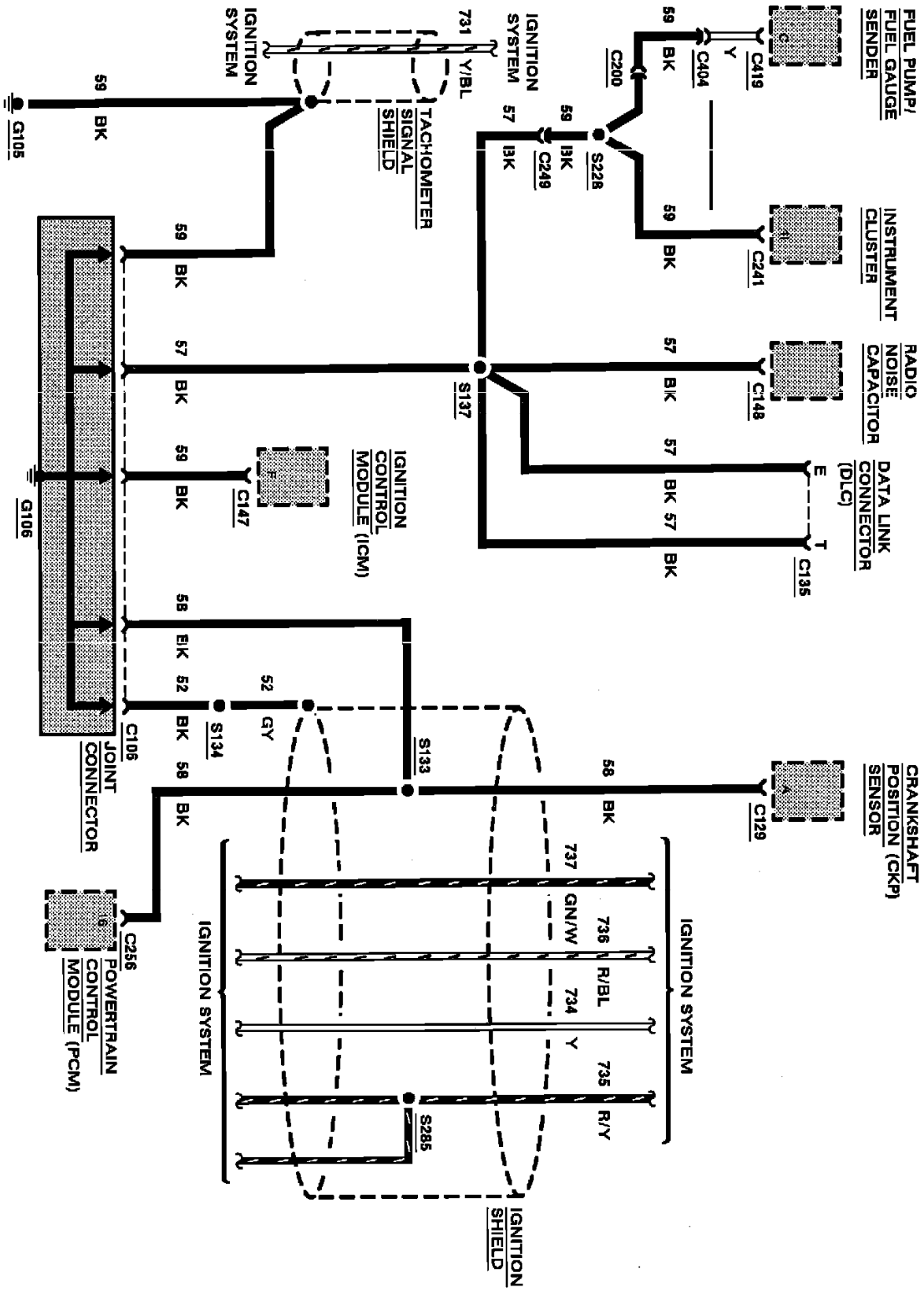

Grounds

1993 Ford Probe L4-121 2.0L DOHC VIN A MFI

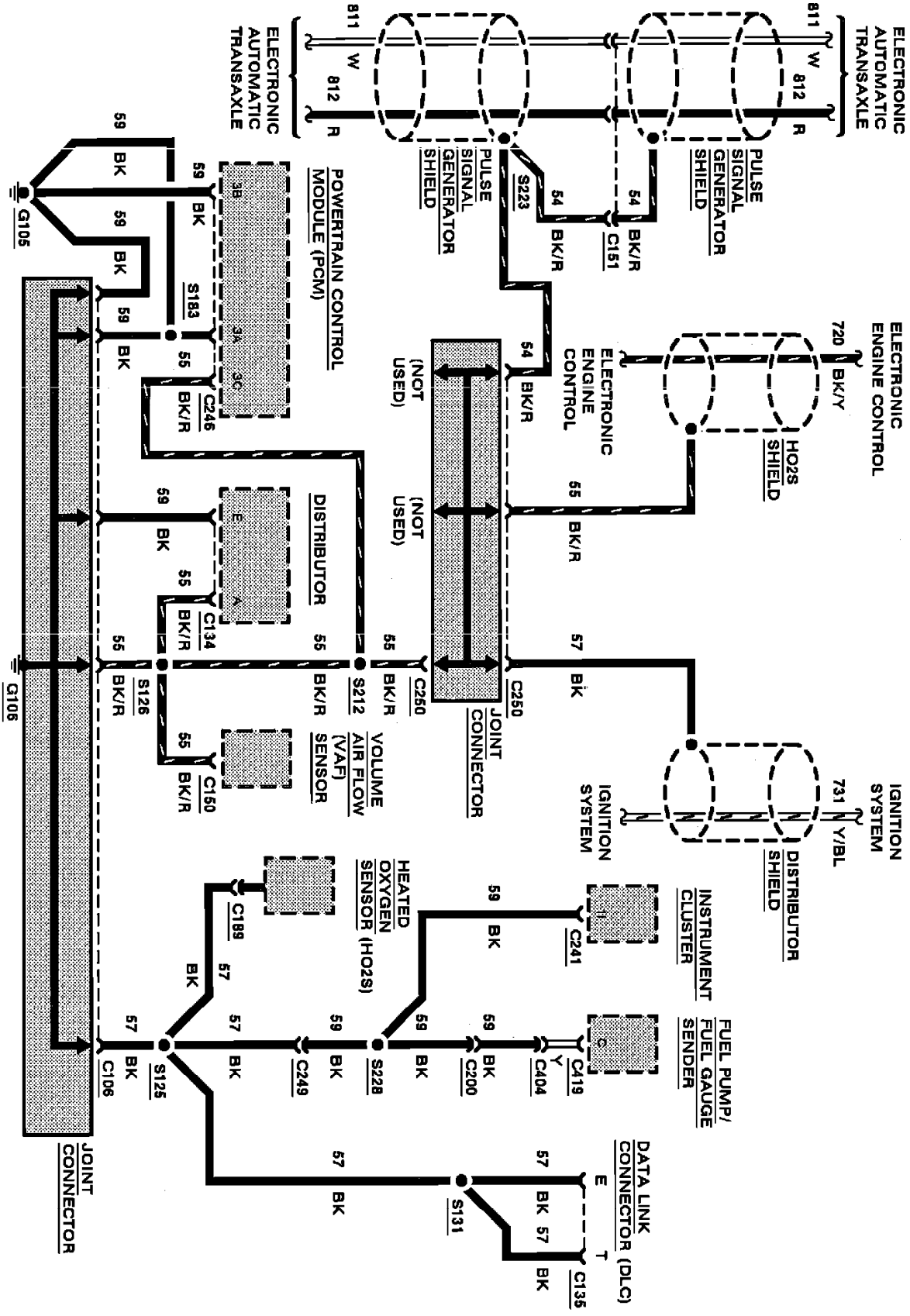

Grounds

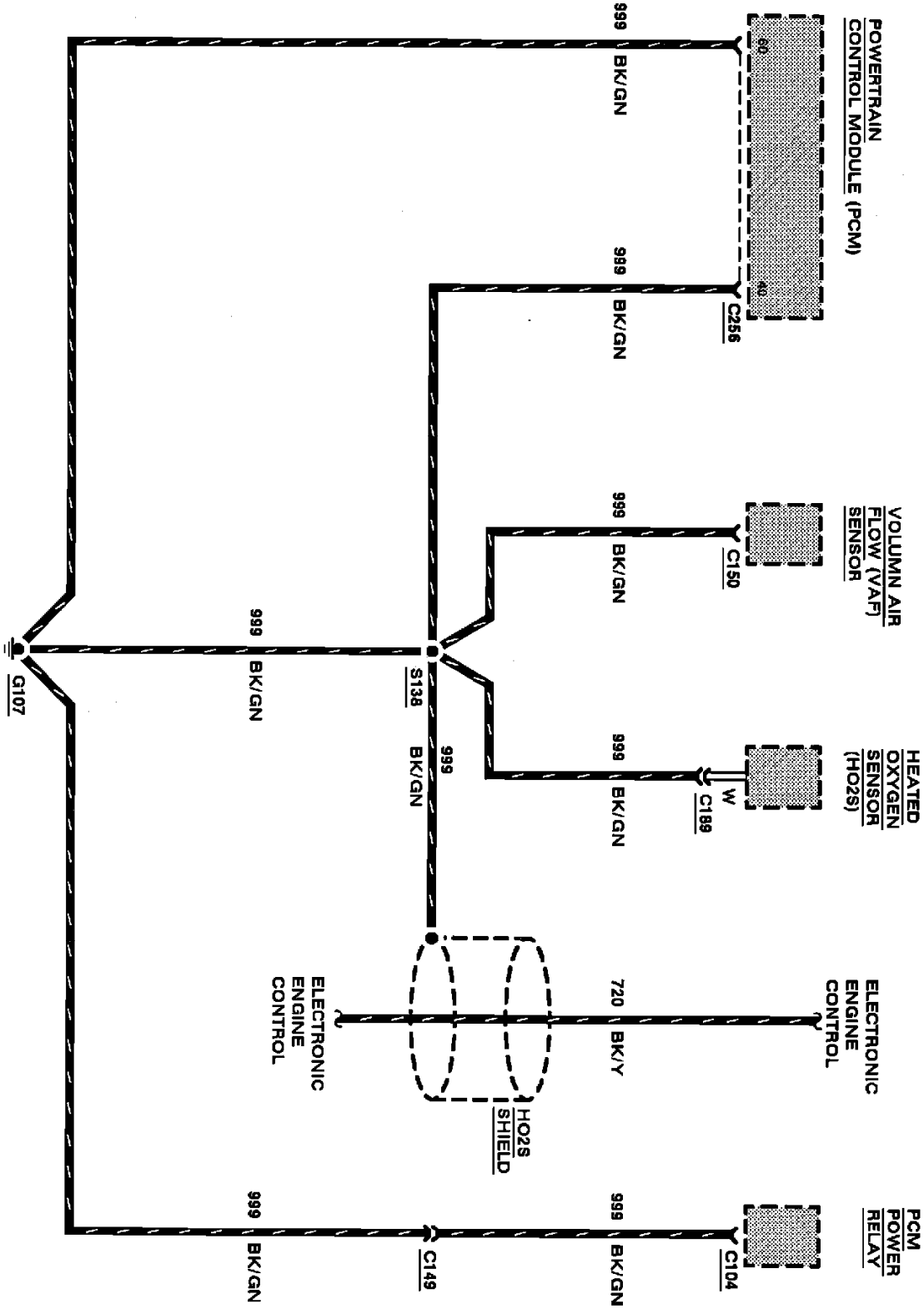
POWERTRAIN CONTROL MODULE (PCM)
60
40
C256
999 BK/GN
999 BK/GN
VOLUMN AIR FLOW (VAF) SENSOR
C150
999 BK/GN
HEATED OXYGEN SENSOR (HO2S)
W
C189
999 BK/GN
ELECTRONIC ENGINE CONTROL
720 BK/Y
PCM POWER RELAY
C104
999 BK/GN
999 BK/GN
S138
999 BK/GN
HO2S SHIELD
ELECTRONIC ENGINE CONTROL
C149
999 BK/GN
G107

Grounds

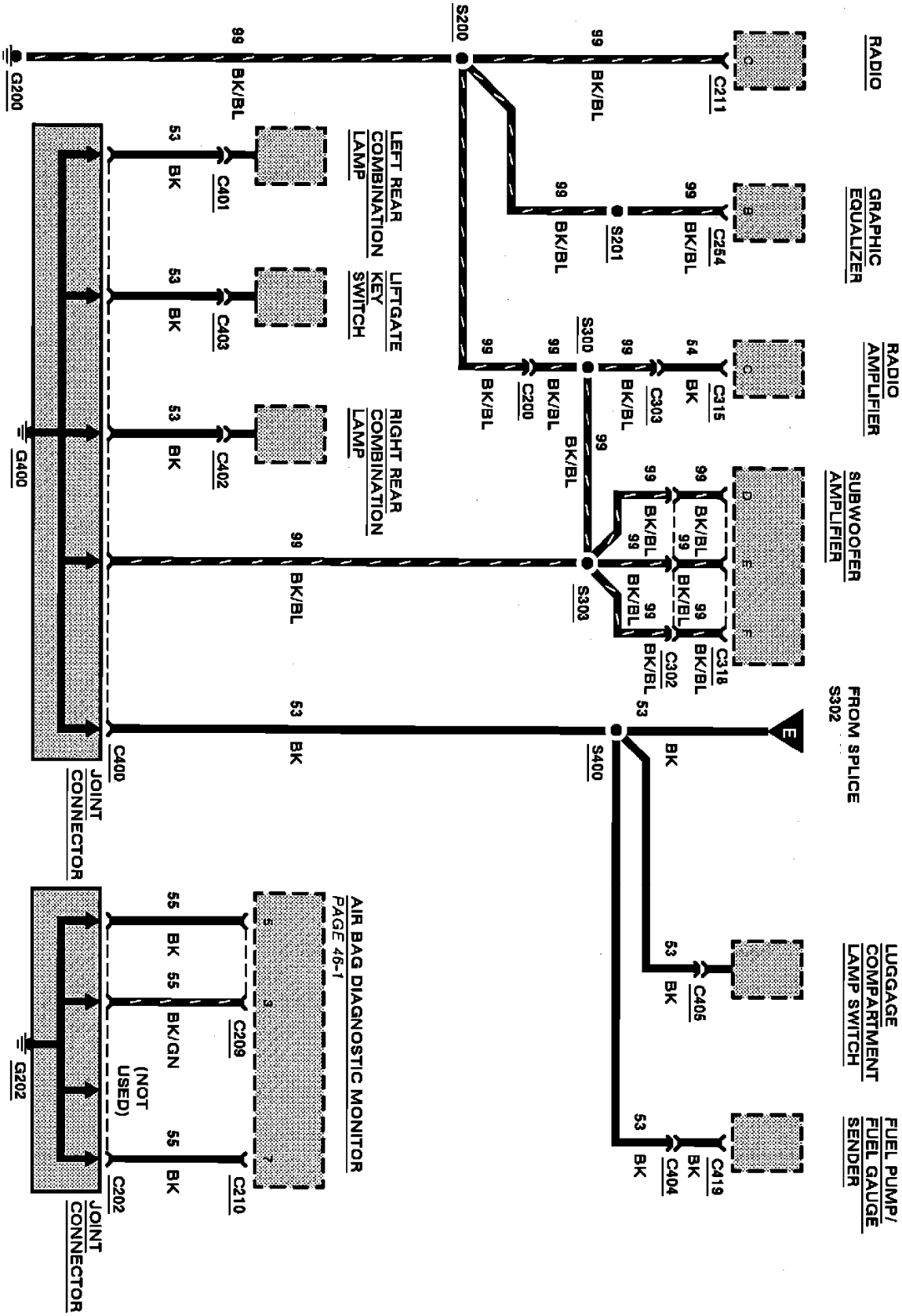
RADIO
GRAPHIC EQUALIZER
RADIO AMPLIFIER
SUBWOOFER AMPLIFIER
FROM SPLICE S302
LUGGAGE COMPARTMENT LAMP SWITCH
FUEL PUMP/ FUEL GAUGE SENDER
LEFT REAR COMBINATION LAMP
LIFTGATE KEY SWITCH
RIGHT REAR COMBINATION LAMP
JOINT CONNECTOR
AIR BAG DIAGNOSTIC MONITOR
PAGE 46-1
(NOT USED)
G200
G400
G202
S200
S201
S300
S303
S400
C211
C254
C315
C303
C200
C318
C302
C405
C419
C404
C401
C403
C402
C209
C210
C202
C400
99
BK/BL
54
BK
53
55
BK/GN

Grounds

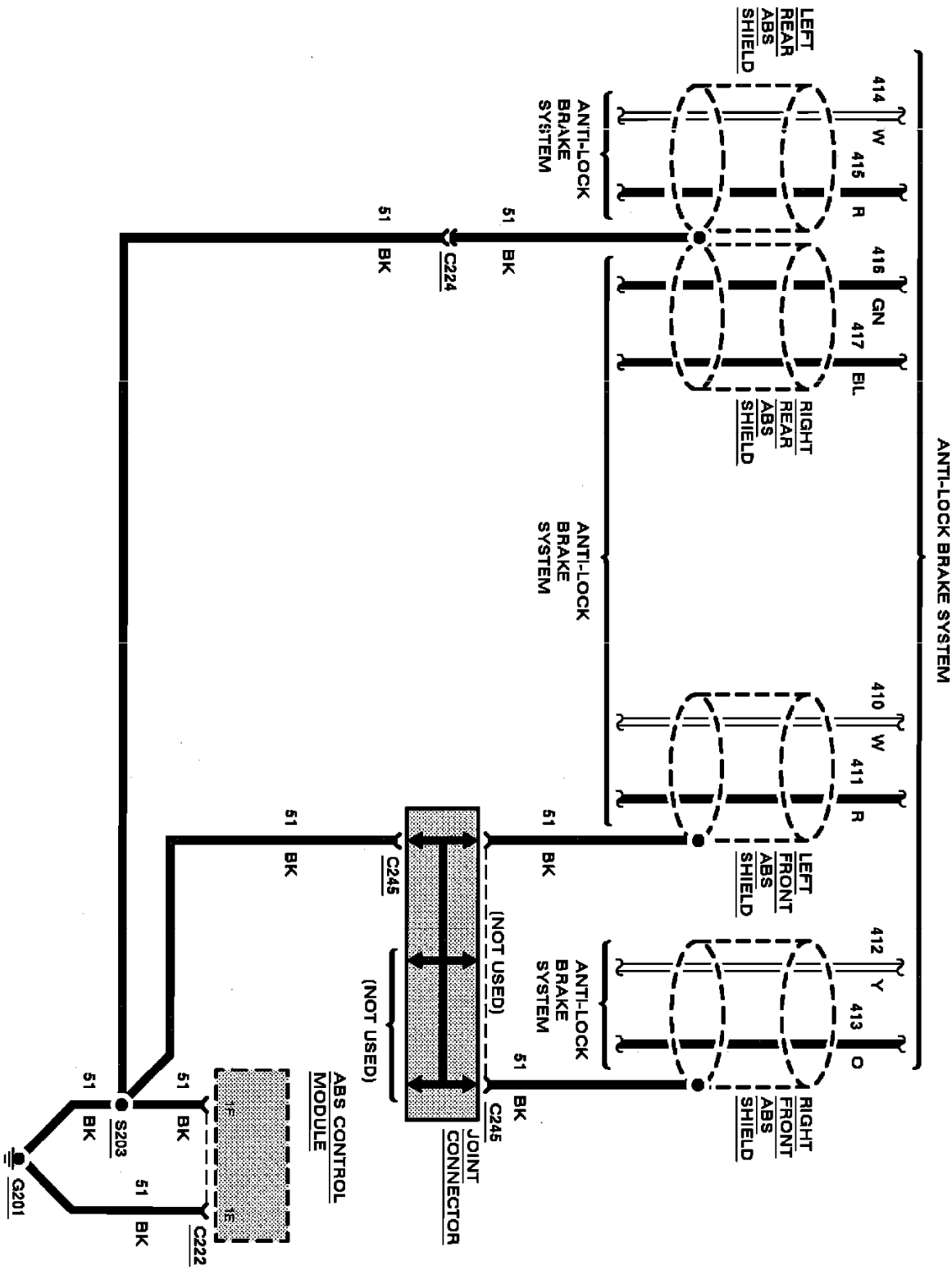
ANTI-LOCK BRAKE SYSTEM
LEFT REAR ABS SHIELD
414 W
415 R
416 GN
417 BL
RIGHT REAR ABS SHIELD
ANTI-LOCK BRAKE SYSTEM
410 W
411 R
LEFT FRONT ABS SHIELD
412 Y
413 O
RIGHT FRONT ABS SHIELD
ANTI-LOCK BRAKE SYSTEM
51 BK
C224
C245
(NOT USED)
JOINT CONNECTOR
ABS CONTROL MODULE
1F
1E
C222
S203
G201

Grounds

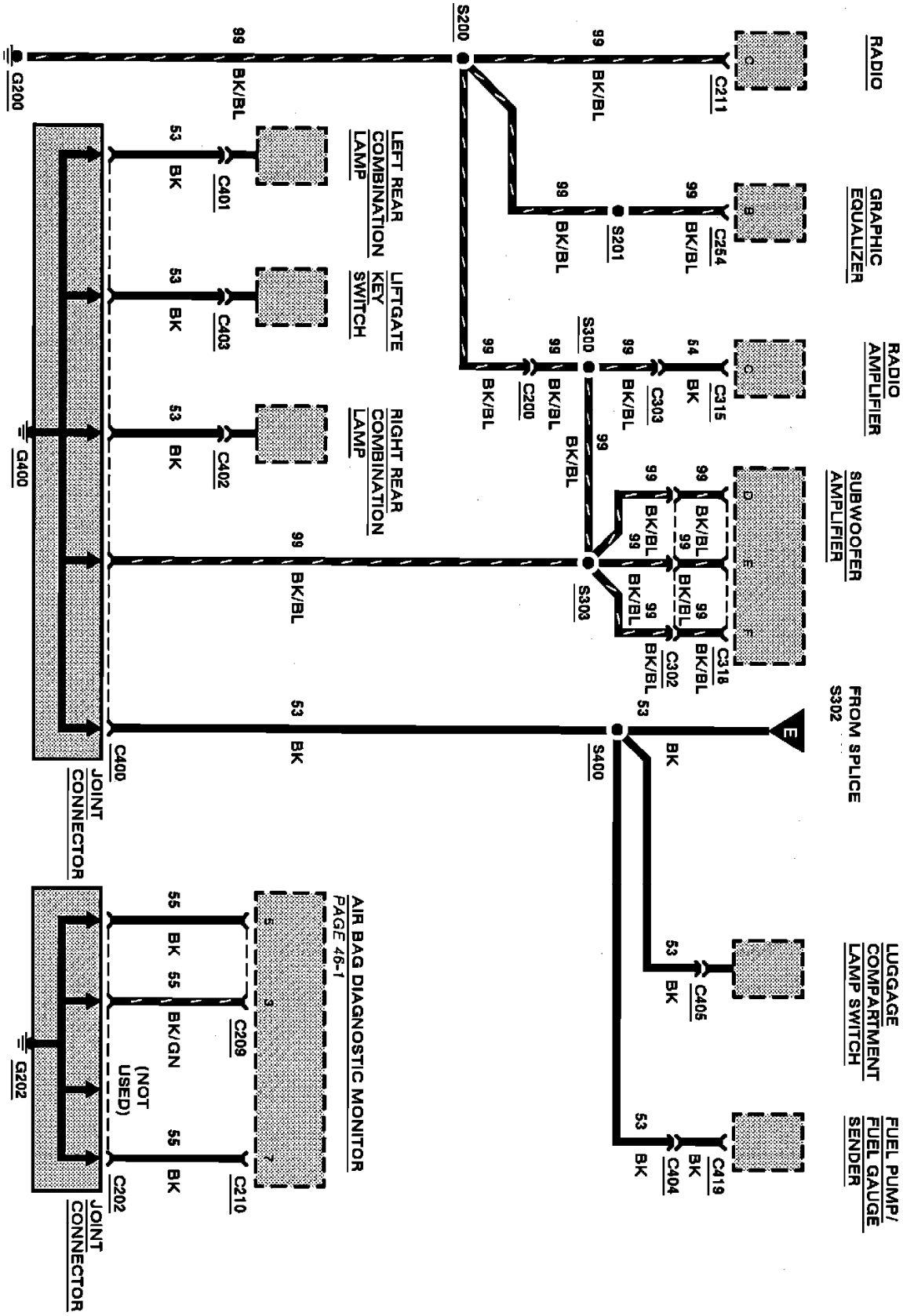
RADIO
GRAPHIC EQUALIZER
RADIO AMPLIFIER
SUBWOOFER AMPLIFIER
FROM SPLICE S302
LUGGAGE COMPARTMENT LAMP SWITCH
FUEL PUMP/ FUEL GAUGE SENDER
LEFT REAR COMBINATION LAMP
LIFTGATE KEY SWITCH
RIGHT REAR COMBINATION LAMP
JOINT CONNECTOR
AIR BAG DIAGNOSTIC MONITOR
PAGE 46-1
(NOT USED)
G200
G400
G202
S200
S201
S300
S303
S400
C211
C254
C315
C303
C200
C318
C302
C405
C419
C404
C401
C403
C402
C400
C209
C210
C202
99 BK/BL
54 BK
53 BK
55 BK
55 BK/GN

Grounds

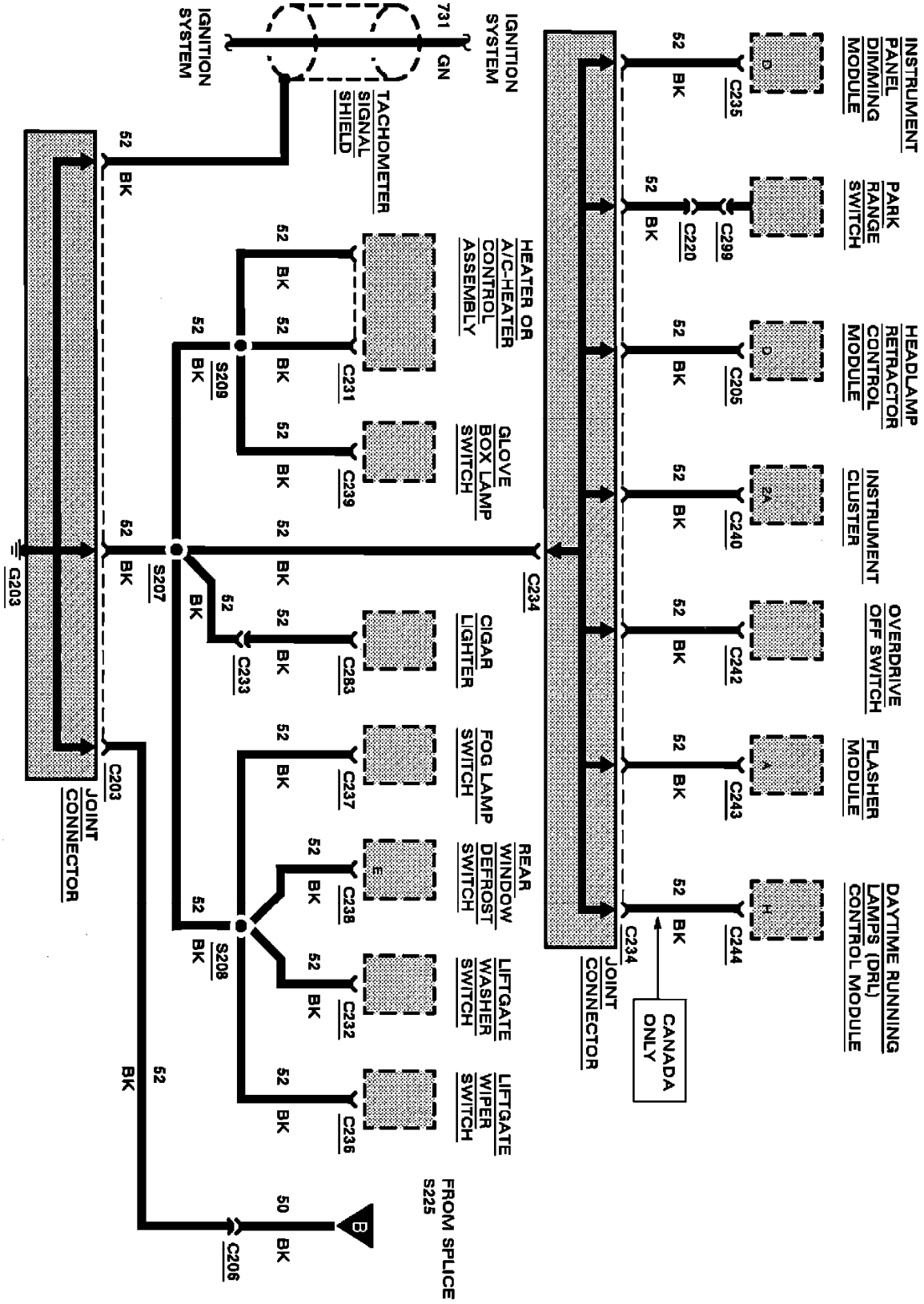
INSTRUMENT PANEL DIMMING MODULE
PARK RANGE SWITCH
HEADLAMP RETRACTOR CONTROL MODULE
INSTRUMENT CLUSTER
OVERDRIVE OFF SWITCH
FLASHER MODULE
DAYTIME RUNNING LAMPS (DRL) CONTROL MODULE
C235
C299
C220
C205
C240
C242
C243
C244
C234
JOINT CONNECTOR
CANADA ONLY
IGNITION SYSTEM
731
GN
TACHOMETER SIGNAL SHIELD
HEATER OR A/C-HEATER CONTROL ASSEMBLY
GLOVE BOX LAMP SWITCH
C231
C239
S209
S207
C233
CIGAR LIGHTER
C283
FOG LAMP SWITCH
C237
REAR WINDOW DEFROST SWITCH
C238
LIFTGATE WASHER SWITCH
C232
LIFTGATE WIPER SWITCH
C236
S208
C203
JOINT CONNECTOR
G203
FROM SPLICE S225
C206
52
BK
50

Grounds

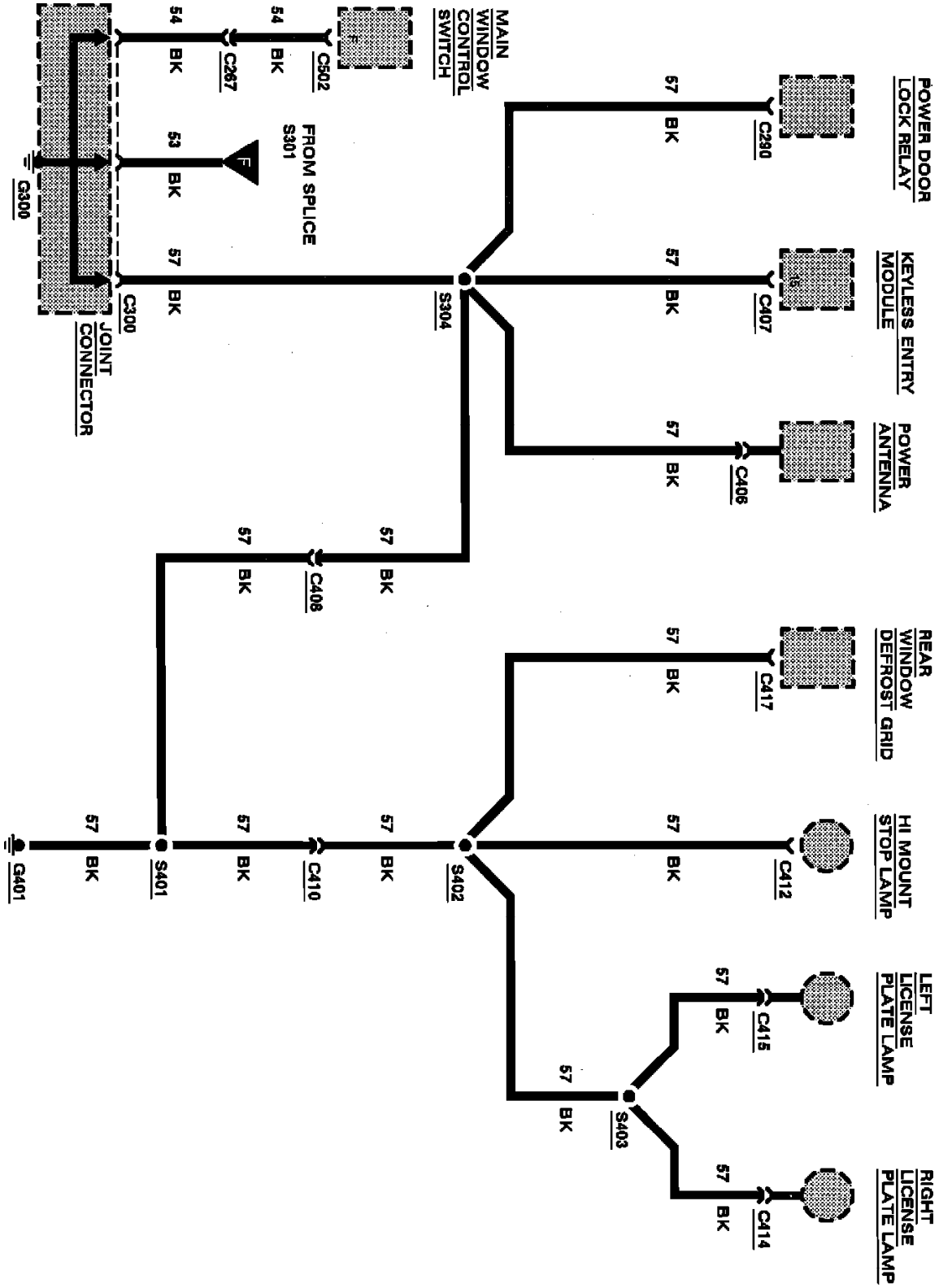
POWER DOOR LOCK RELAY
KEYLESS ENTRY MODULE
POWER ANTENNA
REAR WINDOW DEFROST GRID
HI MOUNT STOP LAMP
LEFT LICENSE PLATE LAMP
RIGHT LICENSE PLATE LAMP
MAIN WINDOW CONTROL SWITCH
FROM SPLICE S301
JOINT CONNECTOR
C290
C407
C406
C417
C412
C415
C414
C502
C267
C300
C408
C410
S304
S402
S403
S401
G300
G401
57 BK
54 BK
53 BK

Grounds

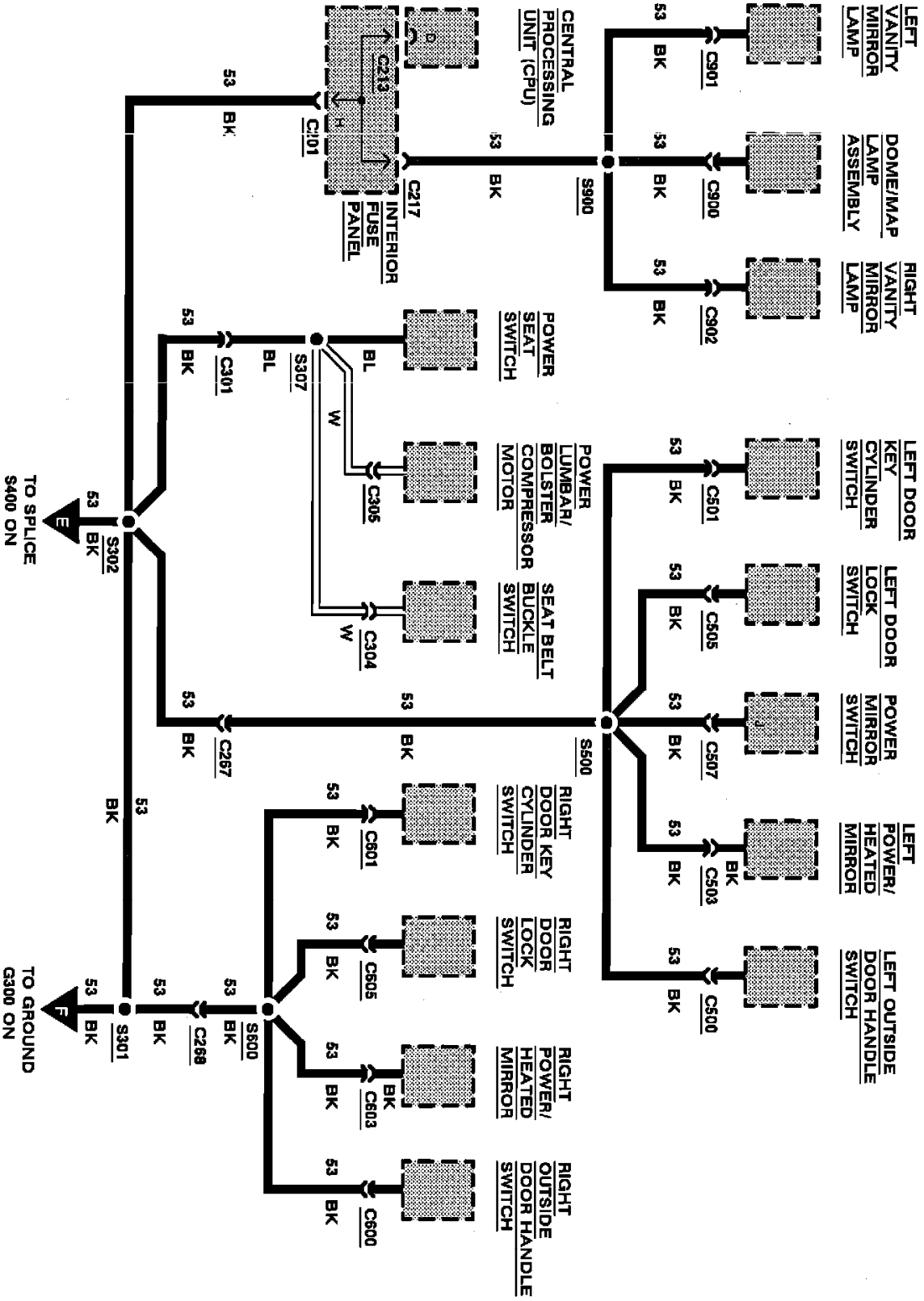
LEFT VANITY MIRROR LAMP
DOME/MAP LAMP ASSEMBLY
RIGHT VANITY MIRROR LAMP
C901
C900
C902
S900
CENTRAL PROCESSING UNIT (CPU)
C217
C219
C101
INTERIOR FUSE PANEL
POWER SEAT SWITCH
POWER LUMBAR/ BOLSTER COMPRESSOR MOTOR
SEAT BELT BUCKLE SWITCH
C305
C304
S307
C301
C267
S500
LEFT DOOR KEY CYLINDER SWITCH
LEFT DOOR LOCK SWITCH
POWER MIRROR SWITCH
LEFT POWER/ HEATED MIRROR
LEFT OUTSIDE DOOR HANDLE SWITCH
C501
C505
C507
C503
C500
RIGHT DOOR KEY CYLINDER SWITCH
RIGHT DOOR LOCK SWITCH
RIGHT POWER/ HEATED MIRROR
RIGHT OUTSIDE DOOR HANDLE SWITCH
C601
C605
C603
C600
S600
C269
S301
S302
TO SPLICE S400 ON
TO GROUND G300 ON
53
BK
BL
W

Grounds

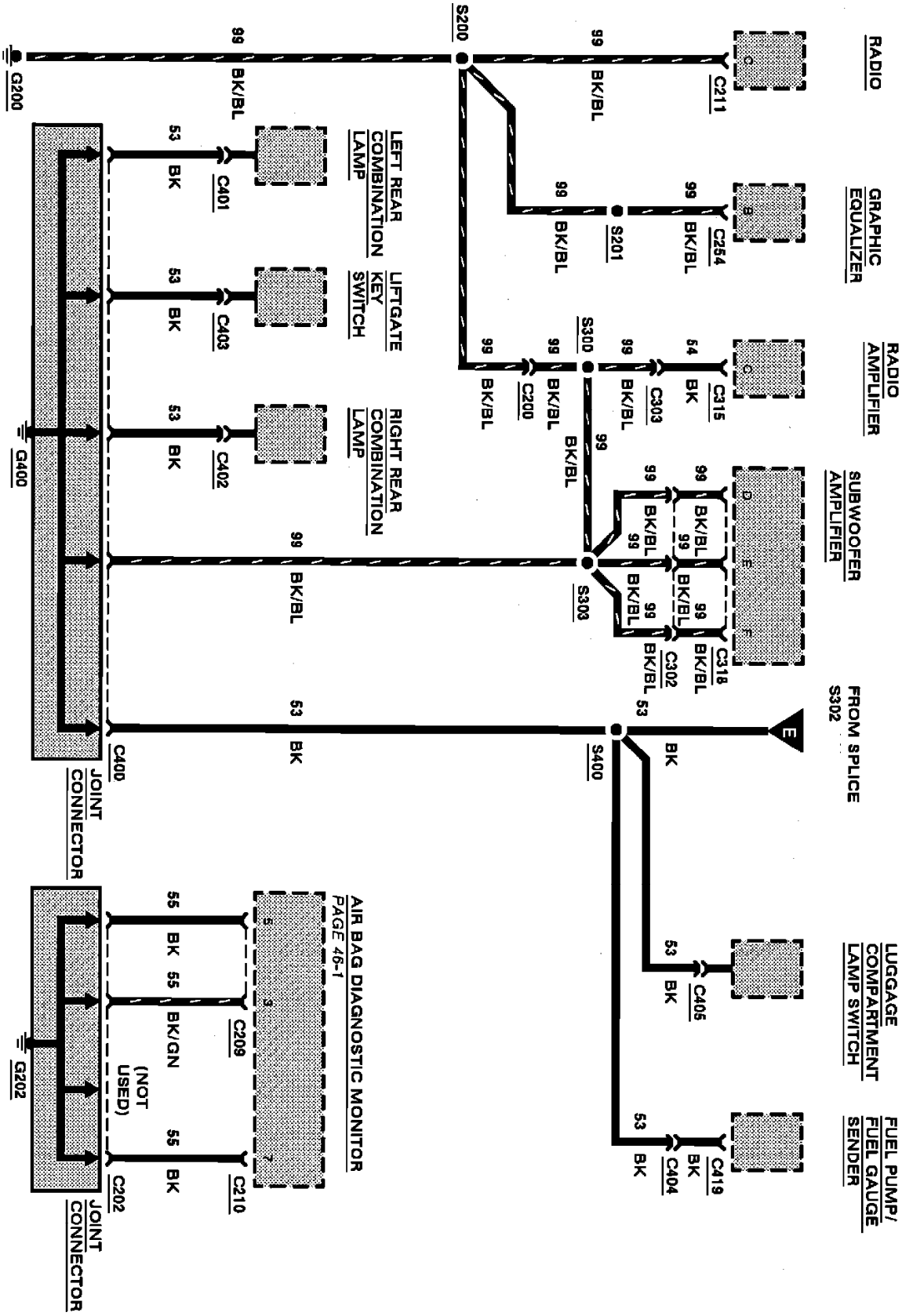
RADIO
GRAPHIC EQUALIZER
RADIO AMPLIFIER
SUBWOOFER AMPLIFIER
FROM SPLICE S302
LUGGAGE COMPARTMENT LAMP SWITCH
FUEL PUMP/ FUEL GAUGE SENDER
LEFT REAR COMBINATION LAMP
LIFTGATE KEY SWITCH
RIGHT REAR COMBINATION LAMP
AIR BAG DIAGNOSTIC MONITOR
PAGE 46-1
JOINT CONNECTOR
JOINT CONNECTOR
(NOT USED)
G200
G400
G202
S200
S201
S300
S303
S400
C211
C254
C315
C303
C200
C318
C302
C405
C419
C404
C401
C403
C402
C209
C210
C202
BK/BL
BK
BK/GN
99
54
53
55

Grounds

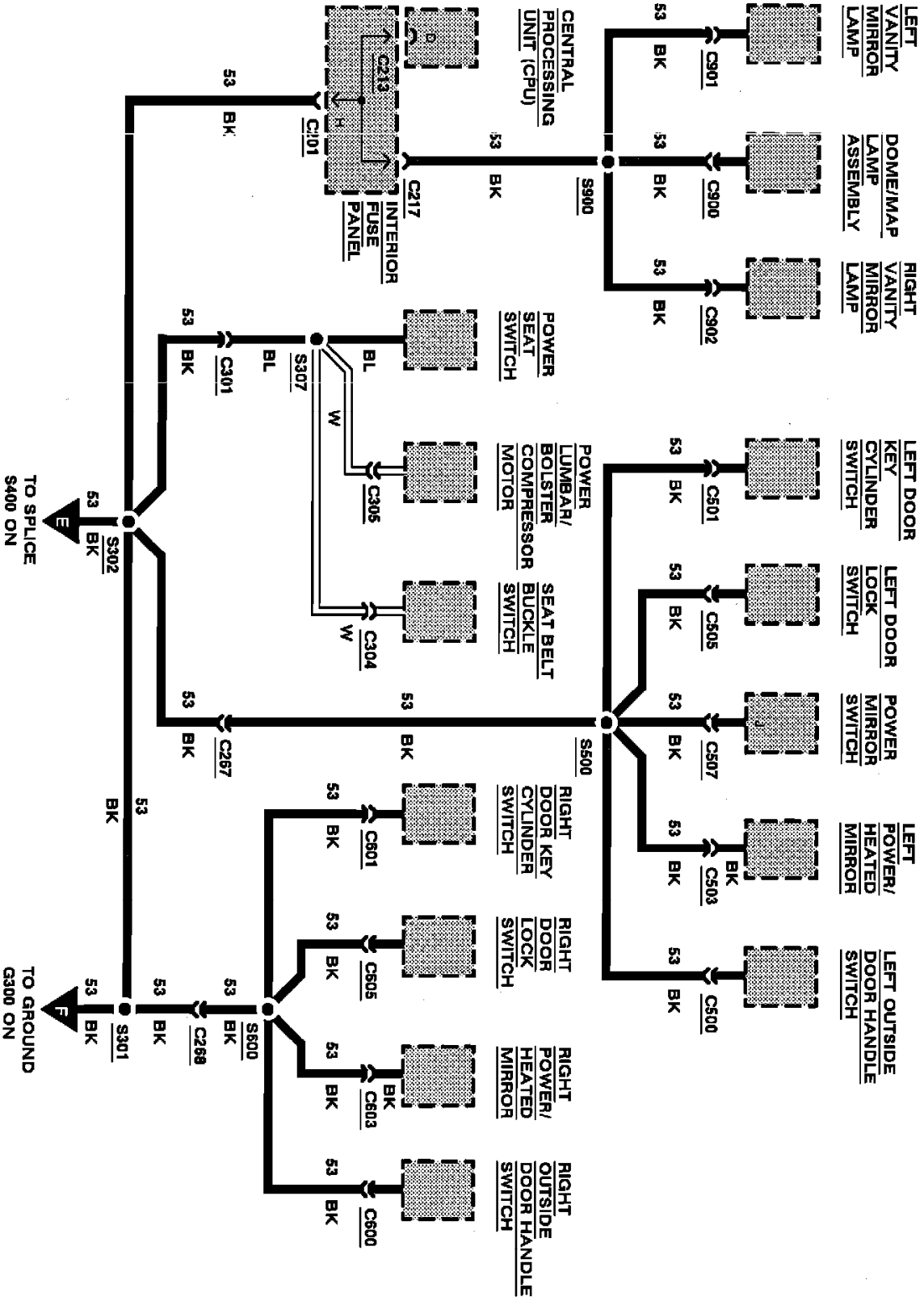
LEFT VANITY MIRROR LAMP
DOME/MAP LAMP ASSEMBLY
RIGHT VANITY MIRROR LAMP
C901
C900
C902
S900
CENTRAL PROCESSING UNIT (CPU)
C217
C213
C101
INTERIOR FUSE PANEL
POWER SEAT SWITCH
POWER LUMBAR/ BOLSTER COMPRESSOR MOTOR
SEAT BELT BUCKLE SWITCH
C305
C304
S307
C301
C267
S500
LEFT DOOR KEY CYLINDER SWITCH
LEFT DOOR LOCK SWITCH
POWER MIRROR SWITCH
LEFT POWER/ HEATED MIRROR
LEFT OUTSIDE DOOR HANDLE SWITCH
C501
C505
C507
C503
C500
RIGHT DOOR KEY CYLINDER SWITCH
RIGHT DOOR LOCK SWITCH
RIGHT POWER/ HEATED MIRROR
RIGHT OUTSIDE DOOR HANDLE SWITCH
C601
C605
C603
C600
S600
C269
S301
S302
TO SPLICE S400 ON
TO GROUND G300 ON
53
BK
BL
W

Grounds

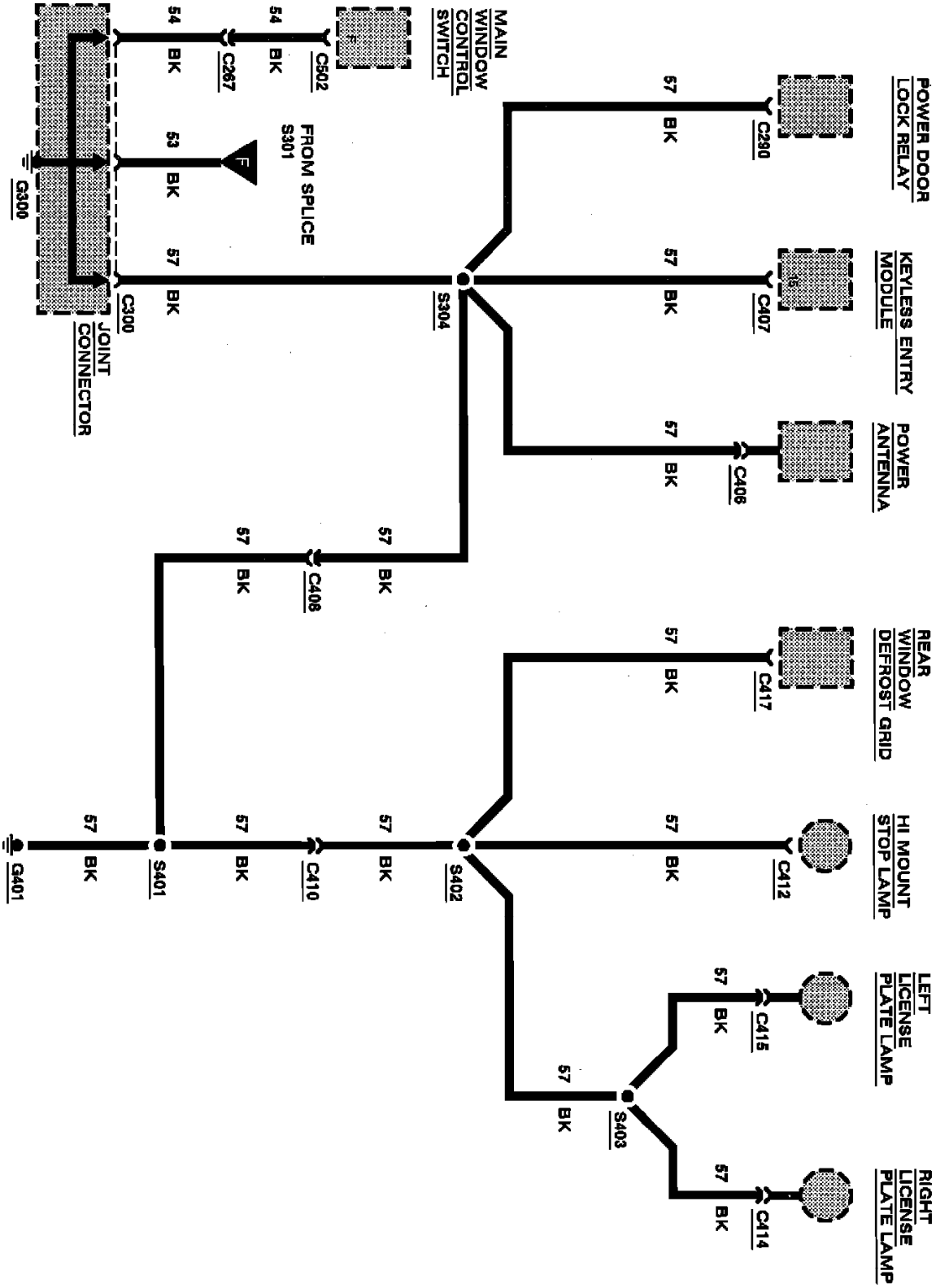
POWER DOOR LOCK RELAY
KEYLESS ENTRY MODULE
POWER ANTENNA
REAR WINDOW DEFROST GRID
HI MOUNT STOP LAMP
LEFT LICENSE PLATE LAMP
RIGHT LICENSE PLATE LAMP
MAIN WINDOW CONTROL SWITCH
FROM SPLICE S301
JOINT CONNECTOR
C290
C407
C406
C417
C412
C415
C414
C502
C267
C300
C408
C410
S304
S402
S403
S401
G300
G401
57 BK
54 BK
53 BK

Grounds

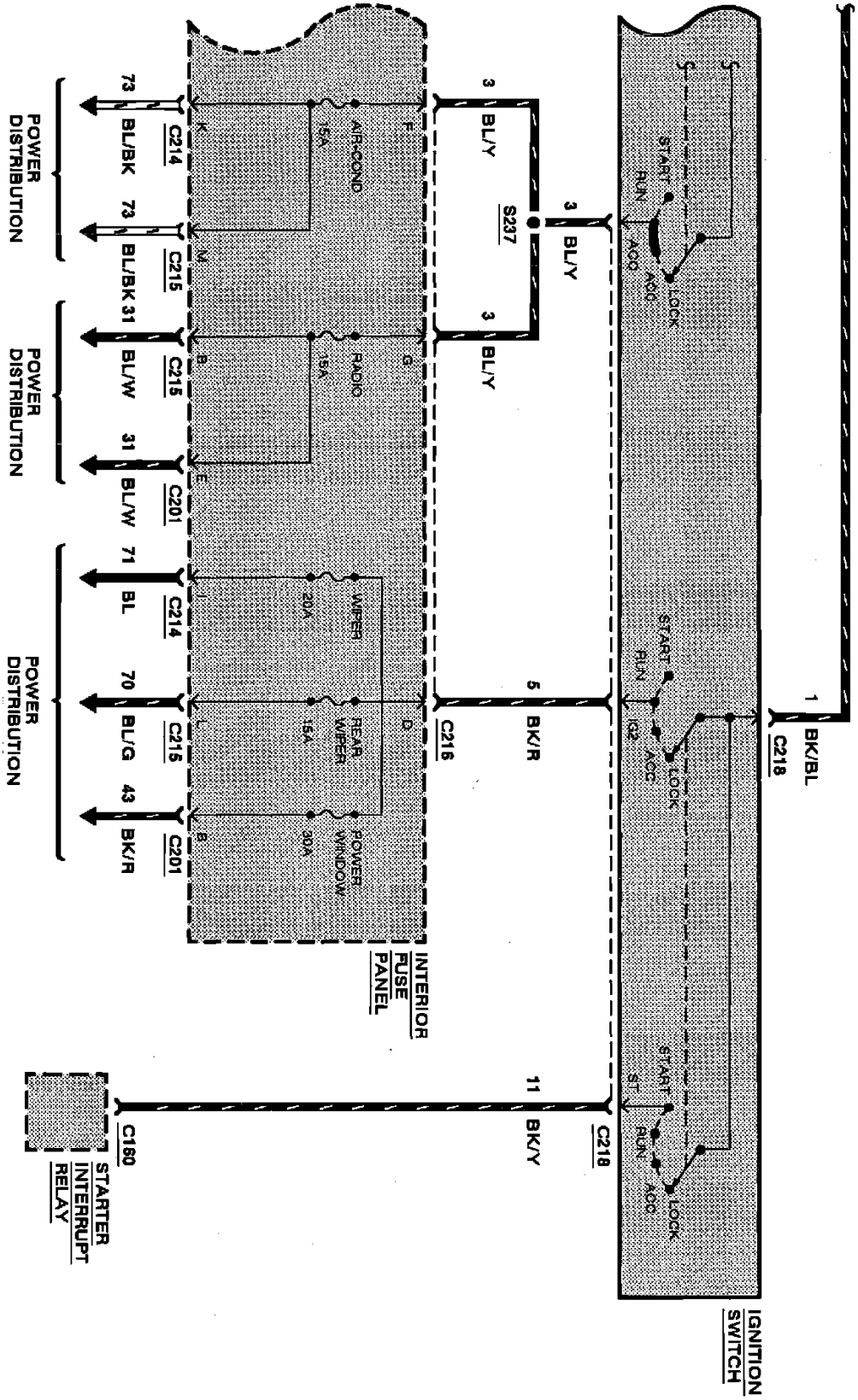

Power Distribution

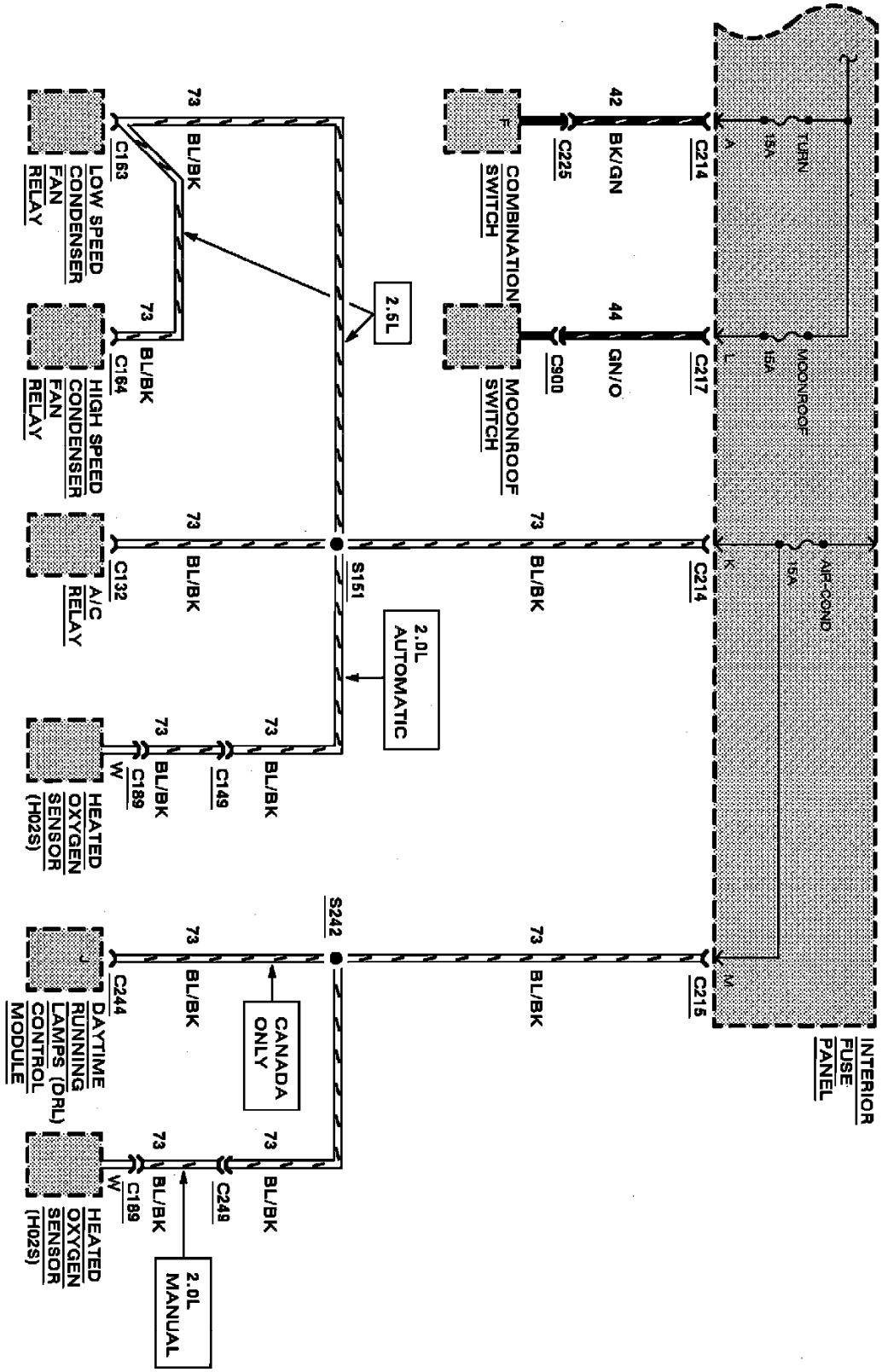

Power Distribution

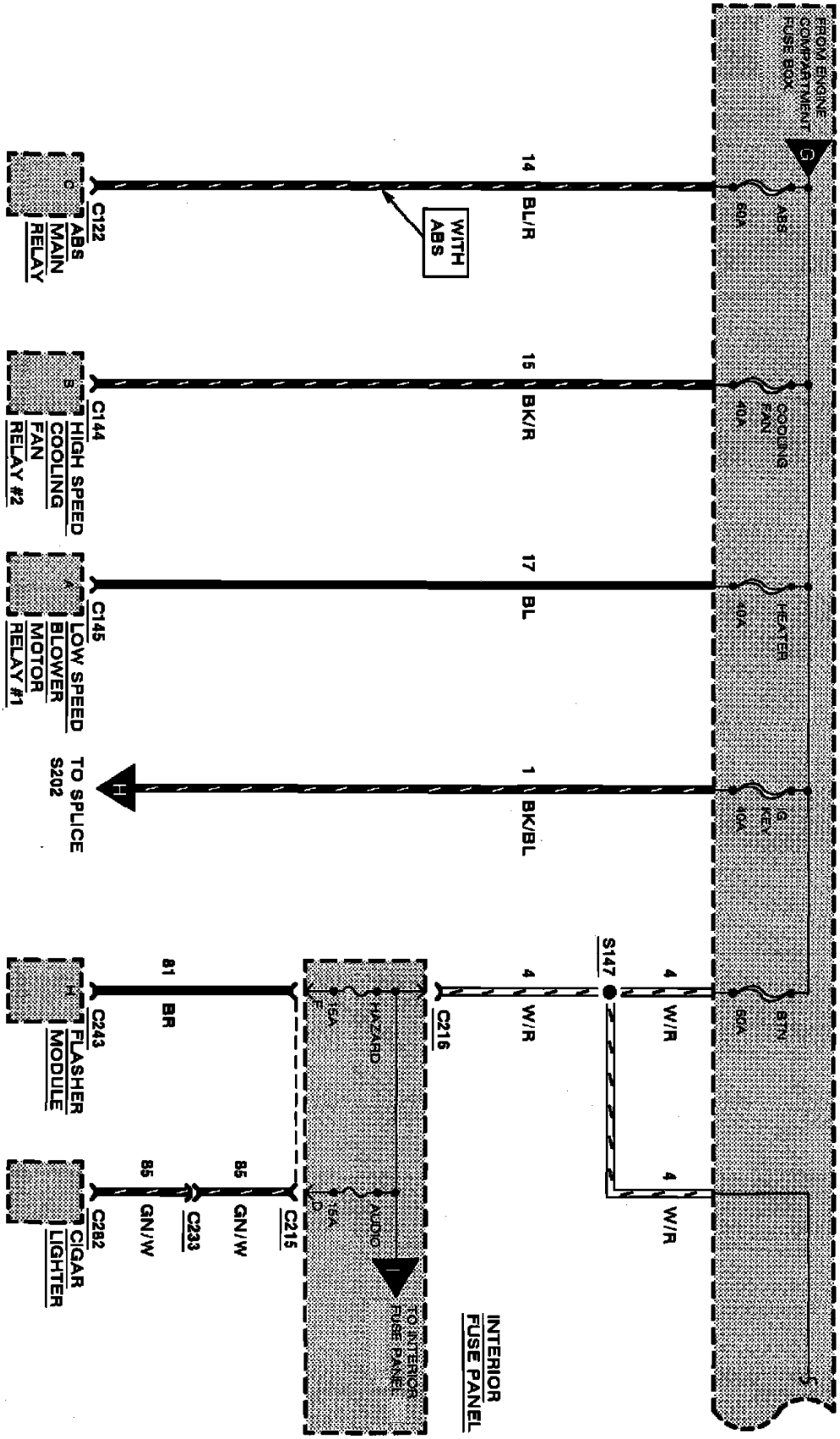

Power Distribution

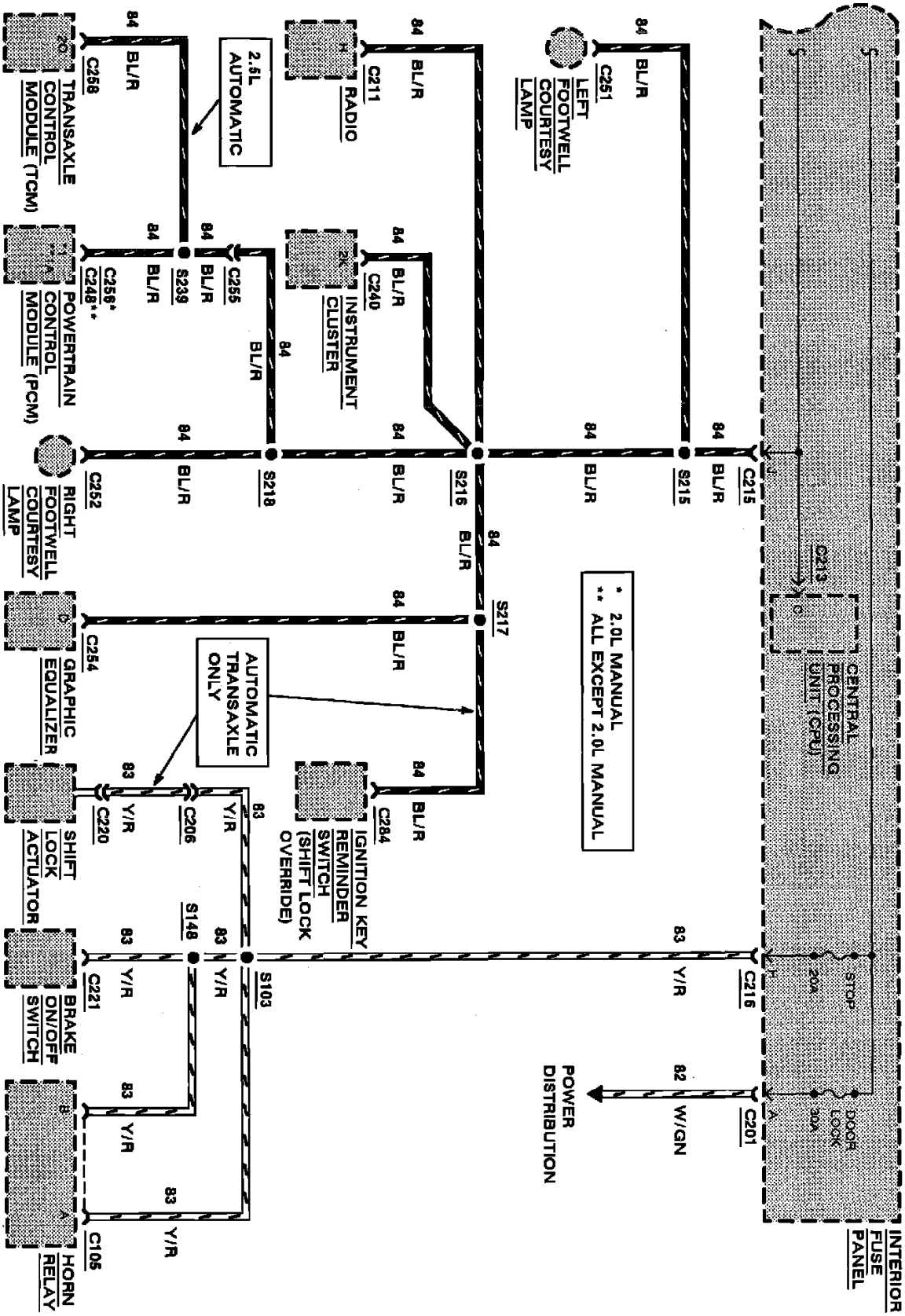

Power Distribution

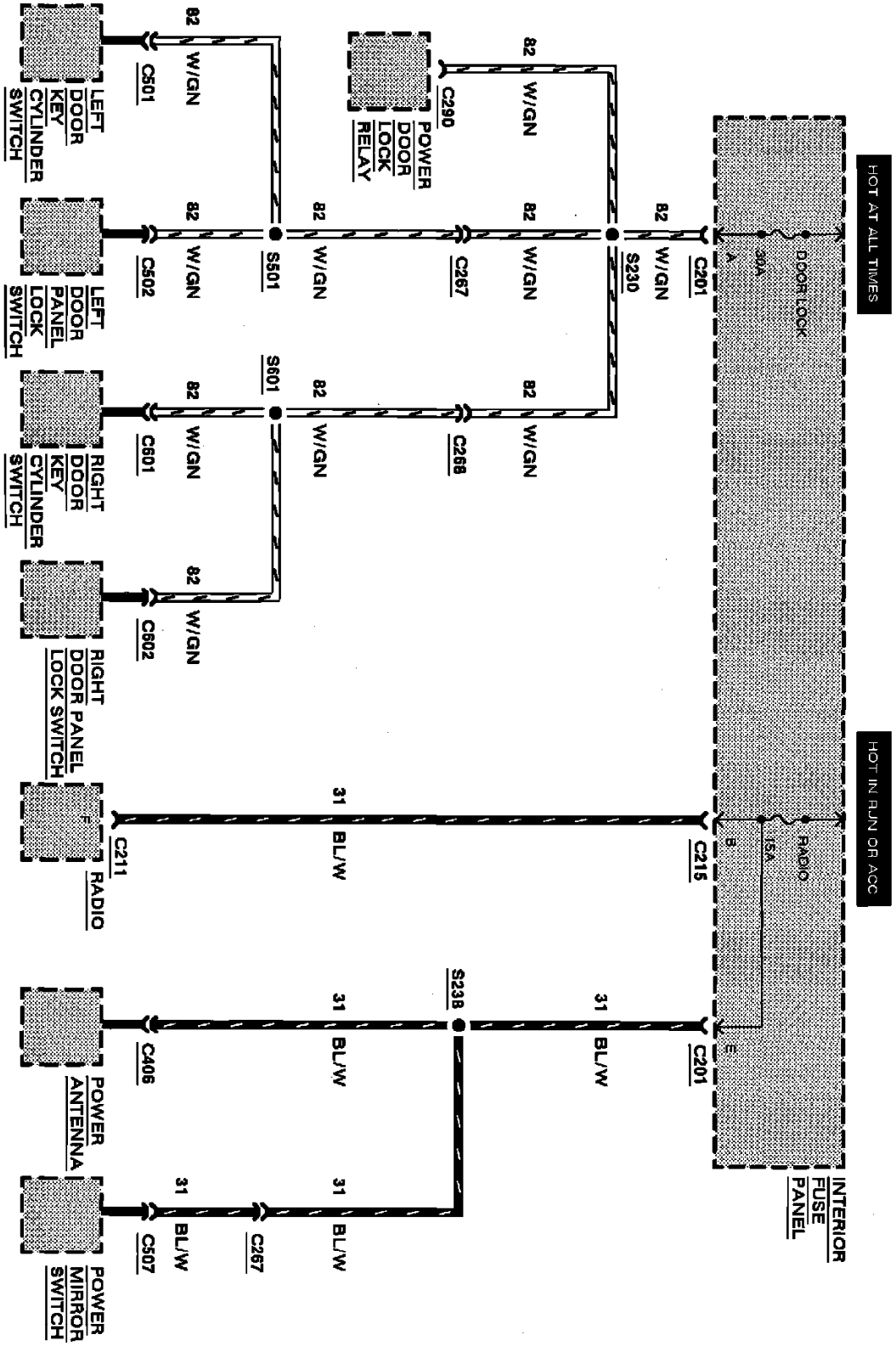

Power Distribution

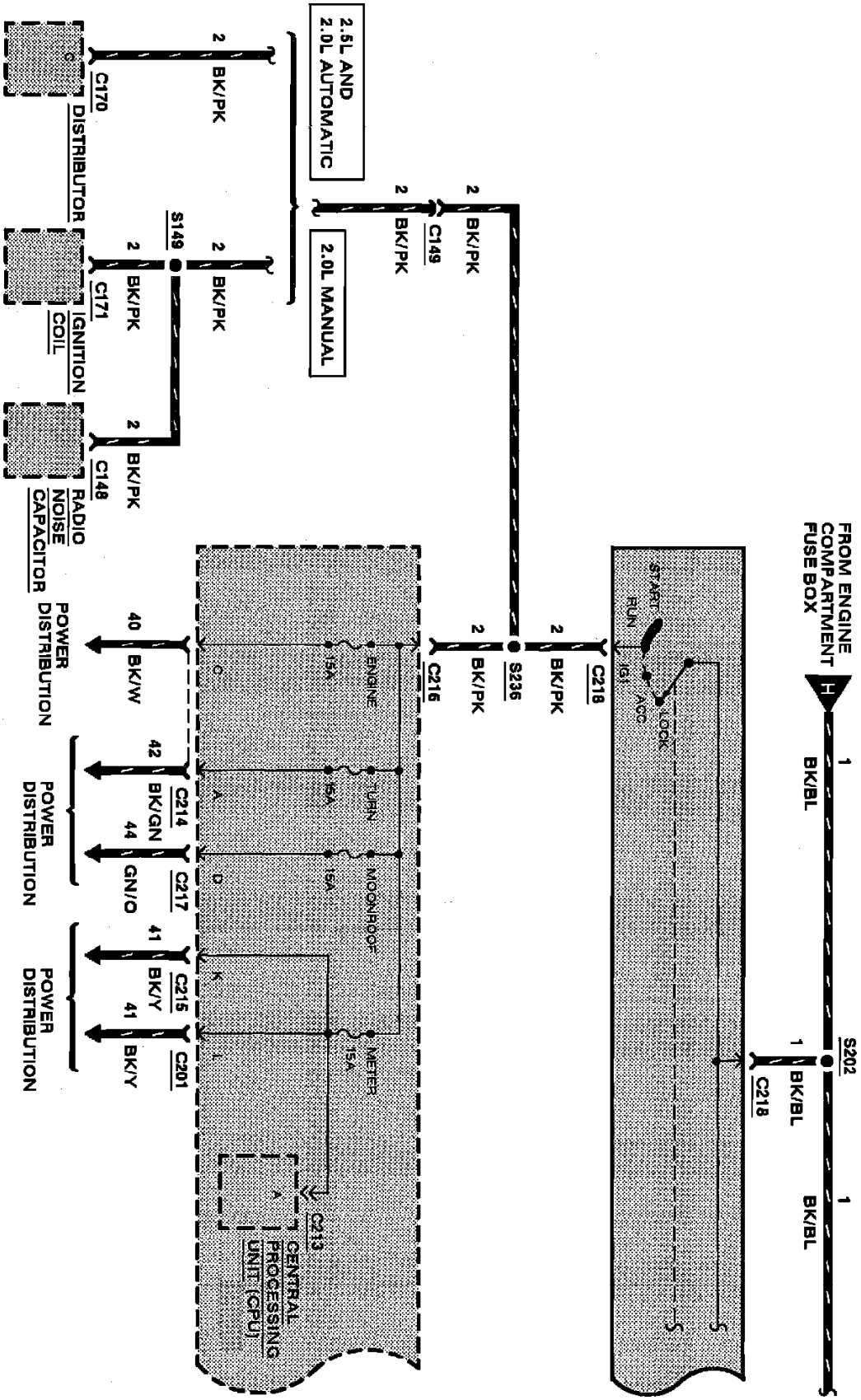

Power Distribution

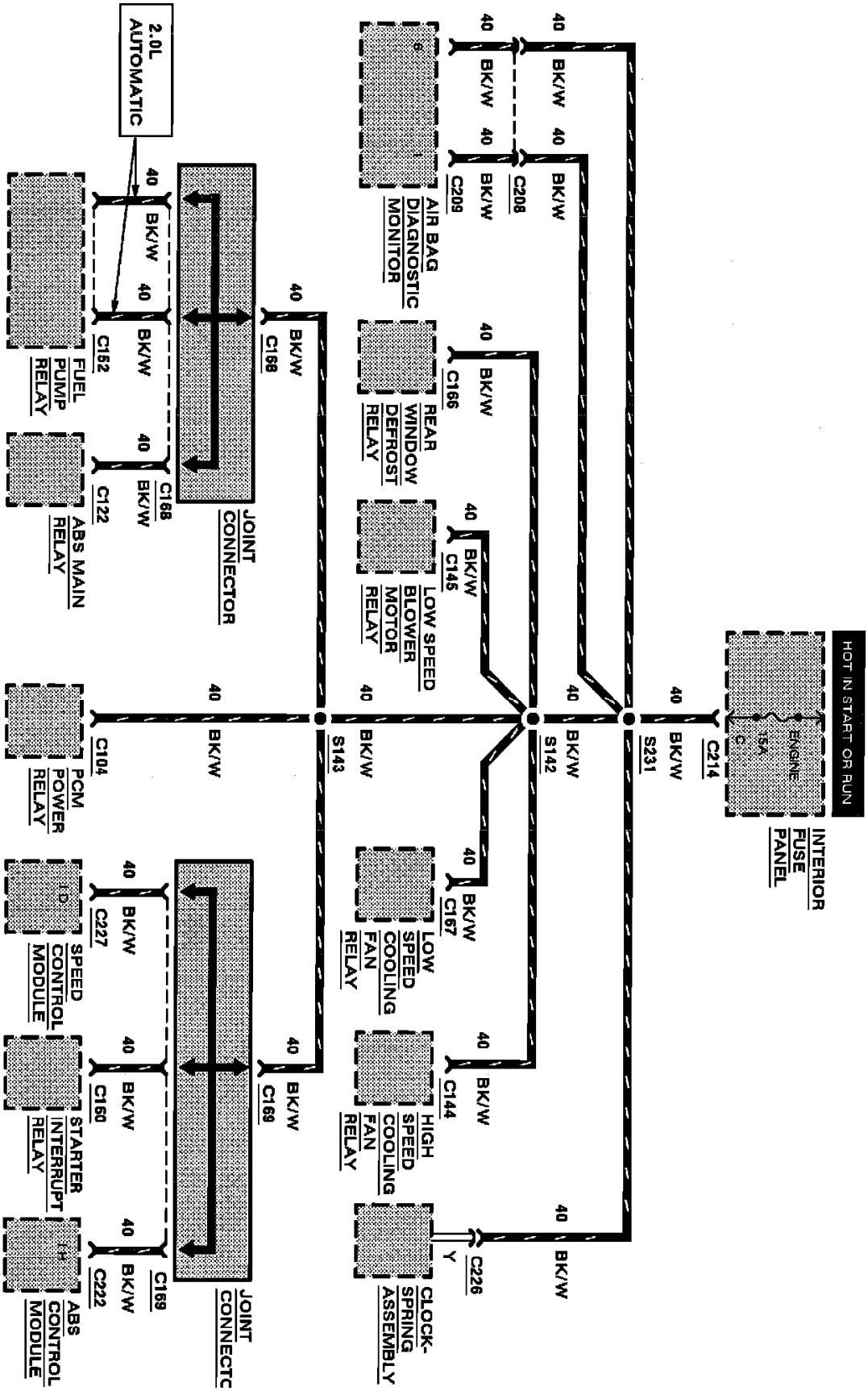

Power Distribution

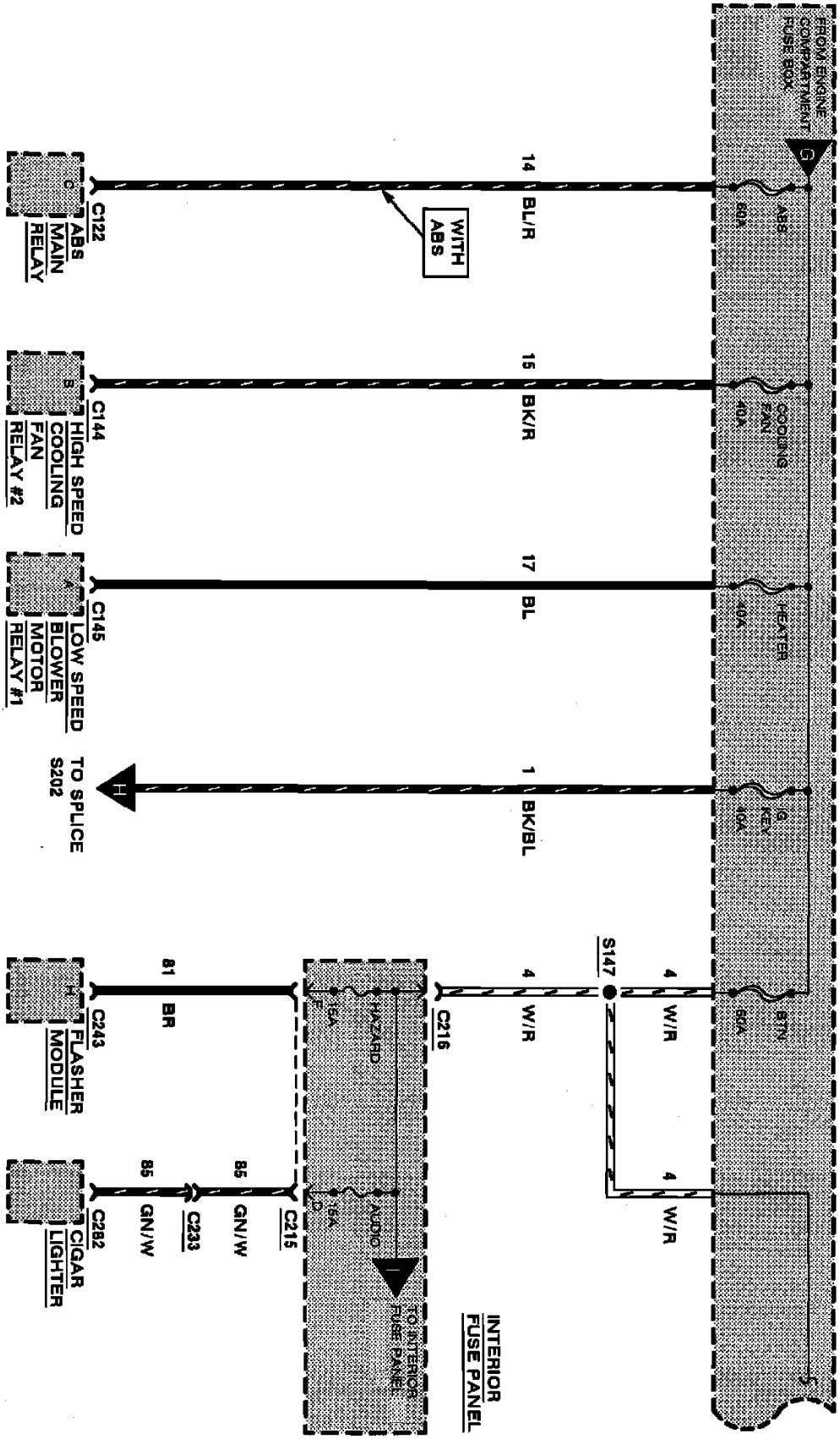

Power Distribution

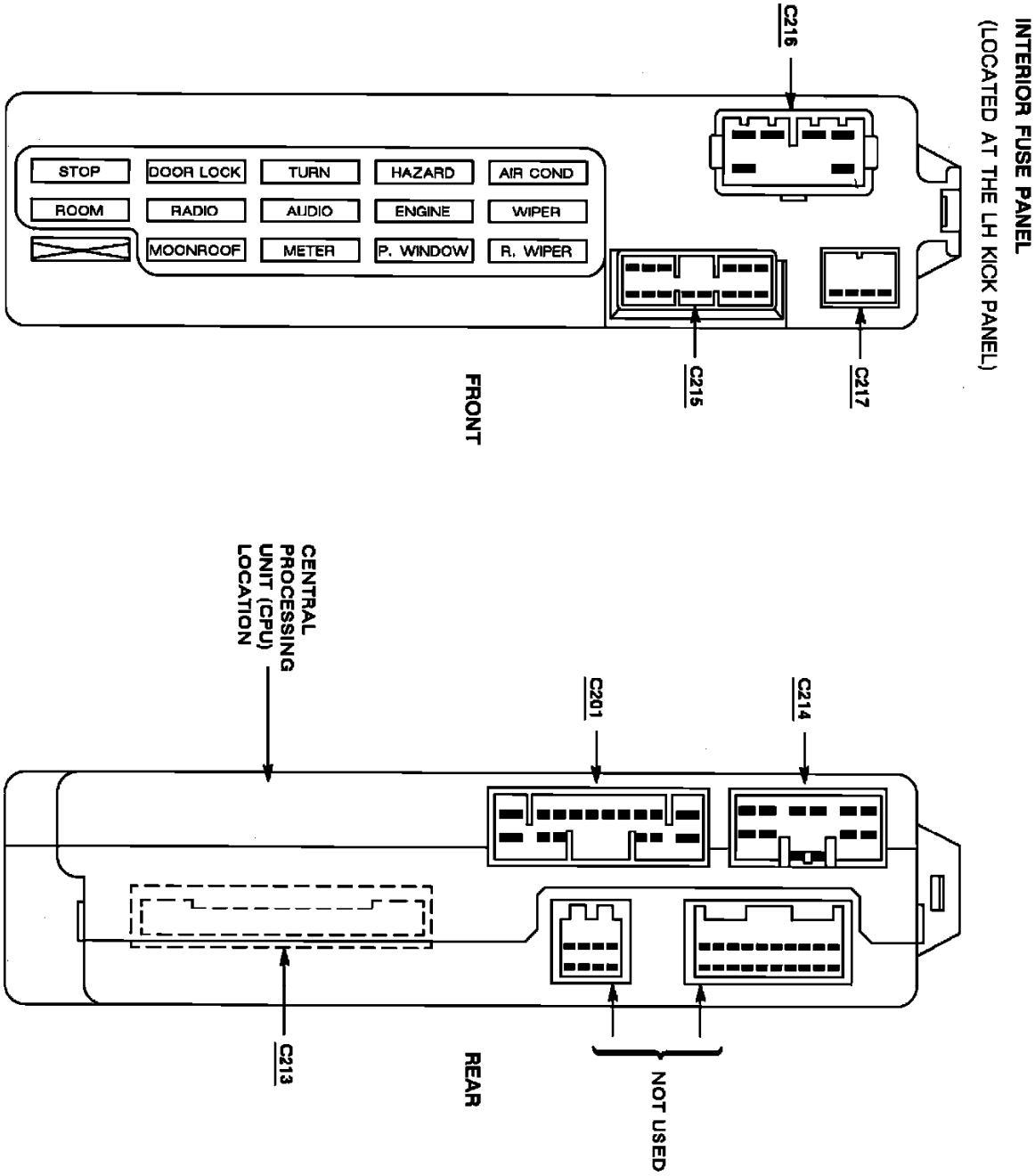

Interior Fuse Panel

FUSE LINK	AMPS	CIRCUITS PROTECTED
STOP	20	HORNS, STOP LAMPS, SHIFT LOCK
DOOR LOCK	30	POWER DOOR LOCKS
TURN	15	TURN/HAZARD LAMPS
HAZARD	15	HAZARD LAMPS
AIR COND	15	AIR CONDITIONER-HEATER, DAYTIME RUNNING LAMPS (DRL), HEATED OXYGEN SENSOR (HO2S)
ROOM	15A	WARNING CHIME, COURTESY LAMPS, ILLUMINATED ENTRY, RADIO, KEYLESS ENTRY, INSTRUMENT CLUSTER, ELECTRONIC ENGINE CONTROL, ELECTRONIC AUTOMATIC TRANSAXLE, ANTI-THEFT
RADIO	15	POWER MIRRORS, RADIO
AUDIO	15	CIGAR LIGHTER
ENGINE	15	AIR BAG RESTRAINT SYSTEM, COOLING FANS, REAR WINDOW DEFROST, HEATER, AIR CONDITIONER-HEATER, ELECTRONIC ENGINE CONTROL, ANTI-LOCK BRAKE SYSTEM (ABS), STARTING SYSTEM, SPEED CONTROL
WIPER	20	WIPER/WASHER, INTERVAL/WASHER
MOONROOF	15	POWER MOONROOF
METER	15	SHIFT LOCK, REAR WINDOW DEFROST, HEATER, AIR CONDITIONER-HEATER, INSTRUMENT CLUSTER, ELECTRONIC AUTOMATIC TRANSAXLE, BACK UP LAMPS, KEYLESS ENTRY, POWER ANTENNA, POWER WINDOWS, WARNING CHIME, ILLUMINATED ENTRY, ANTI-THEFT
POWER WINDOW	30	POWER WINDOWS
REAR WIPER	15A	LIFTGATE WIPER/WASHER

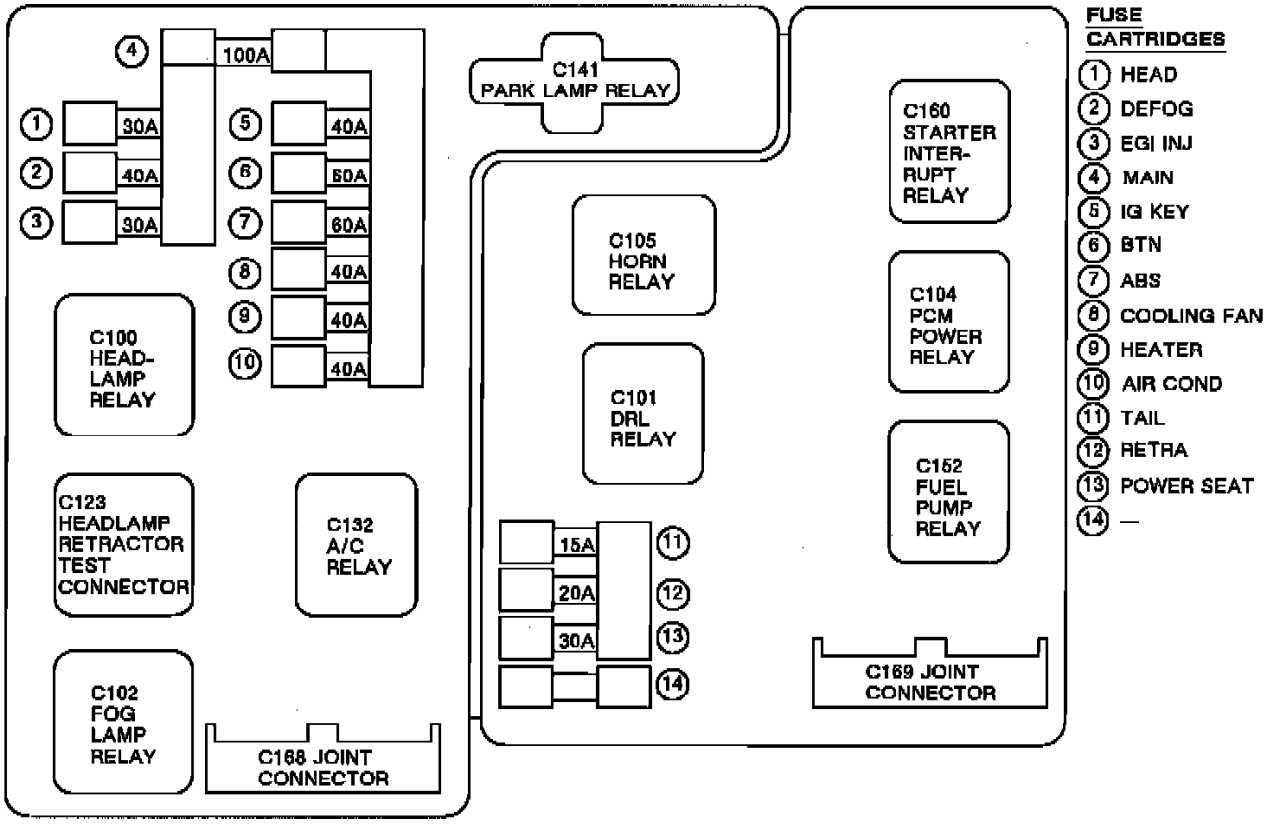

Engine Compartment Fuse Panel

FUSE CARTRIDGE	AMPS	CIRCUITS PROTECTED
MAIN	100	ALL CIRCUITS (EXCEPT STARTER MOTOR, HEADLAMPS, FOG LAMPS, DAYTIME RUNNING LAMPS (DRL), REAR WINDOW DEFROST, AIR BAG RESTRAINT SYSTEM, AND ELECTRONIC ENGINE CONTROL)
HEAD	30	HEADLAMPS, FOG LAMPS, DAYTIME RUNNING LAMPS (DRL)
DEFOG	40	REAR WINDOW DEFROST
EGI INJ	30	AIR BAG RESTRAINT SYSTEM, ELECTRONIC ENGINE CONTROL
IG KEY	40	ALL CIRCUITS POWERED BY IGNITION SWITCH
BTN	60	HEADLAMP RETRACTORS, POWER SEAT, POWER LUMBAR SEAT, EXTERIOR LAMPS, WARNING CHIME, ILLUMINATED ENTRY, ANTI-THEFT, INTERIOR FUSE PANEL FUSES-HAZARD, AUDIO, ROOM, STOP, AND DOOR LOCK
ABS	60	ANTI-LOCK BRAKE SYSTEM (ABS)
COOLNG FAN	40	COOLNG FANS
HEATER	40	HEATER, AIR CONDITIONER-HEATER
AIR COND	40	AIR CONDITIONER-HEATER
TAIL	15	EXTERIOR LAMPS
RETRA	20	HEADLAMP RETRACTORS
POWER SEAT	30	POWER SEAT, POWER LUMBAR SEAT

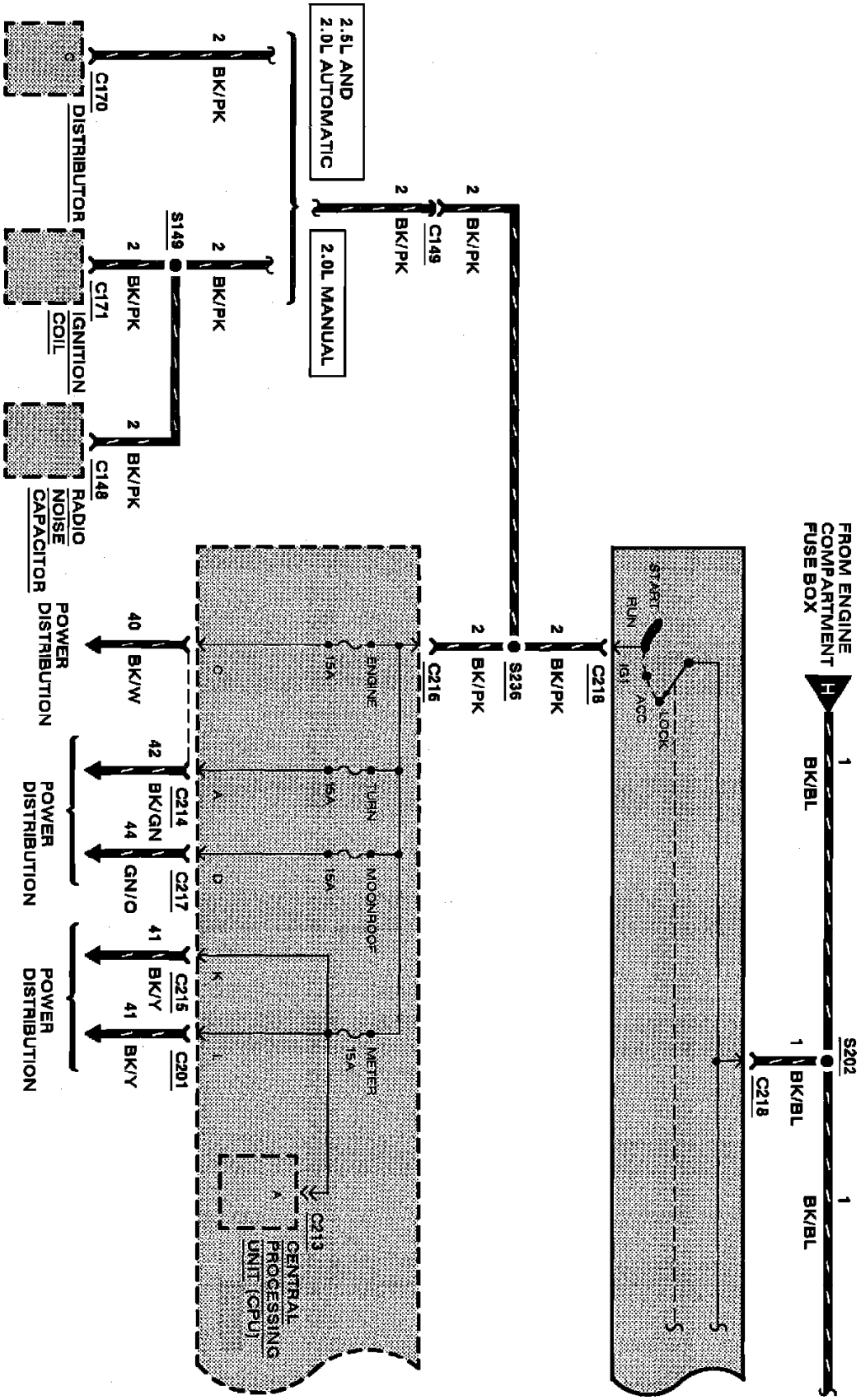

Power Distribution

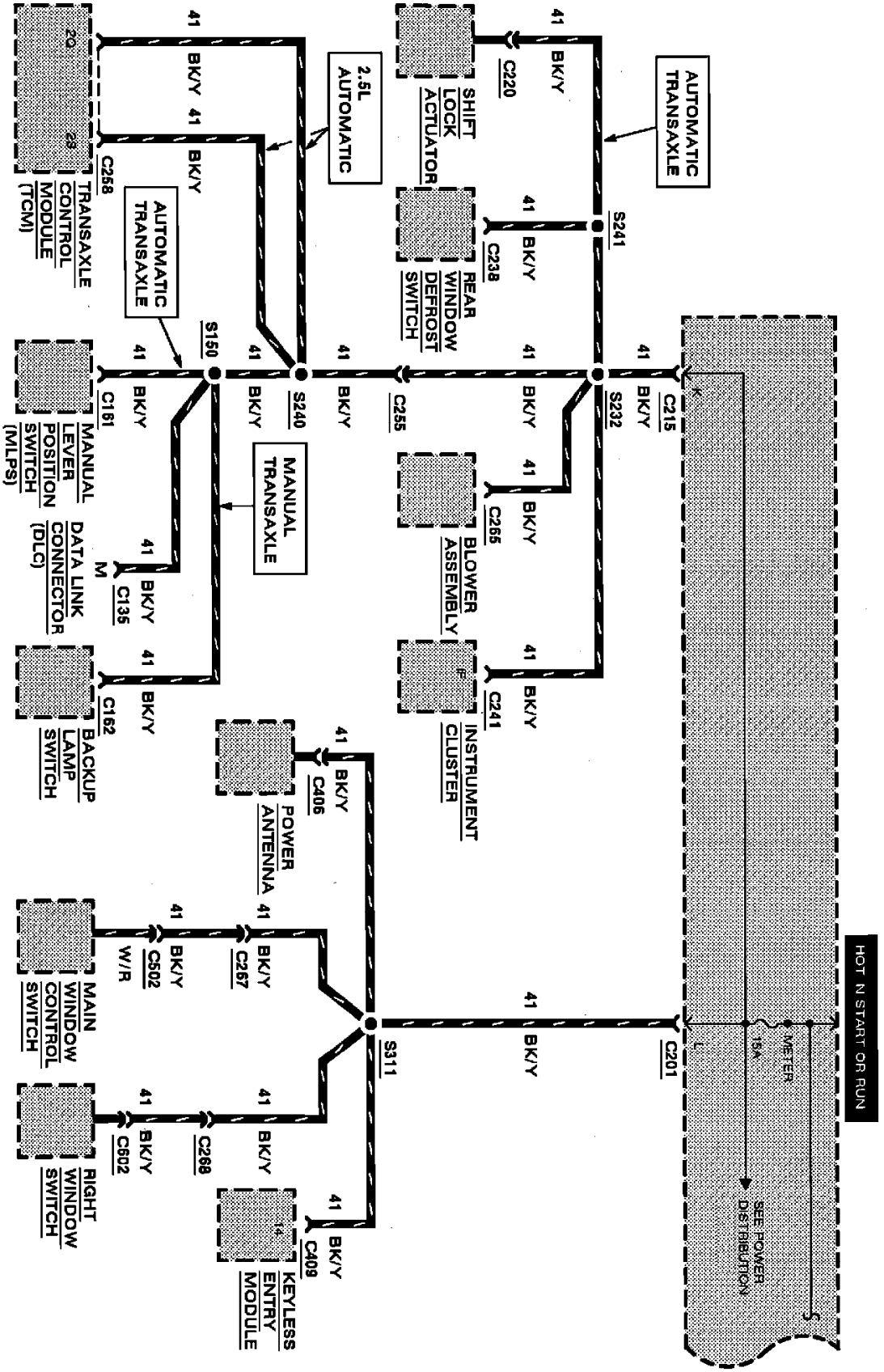

Power Distribution

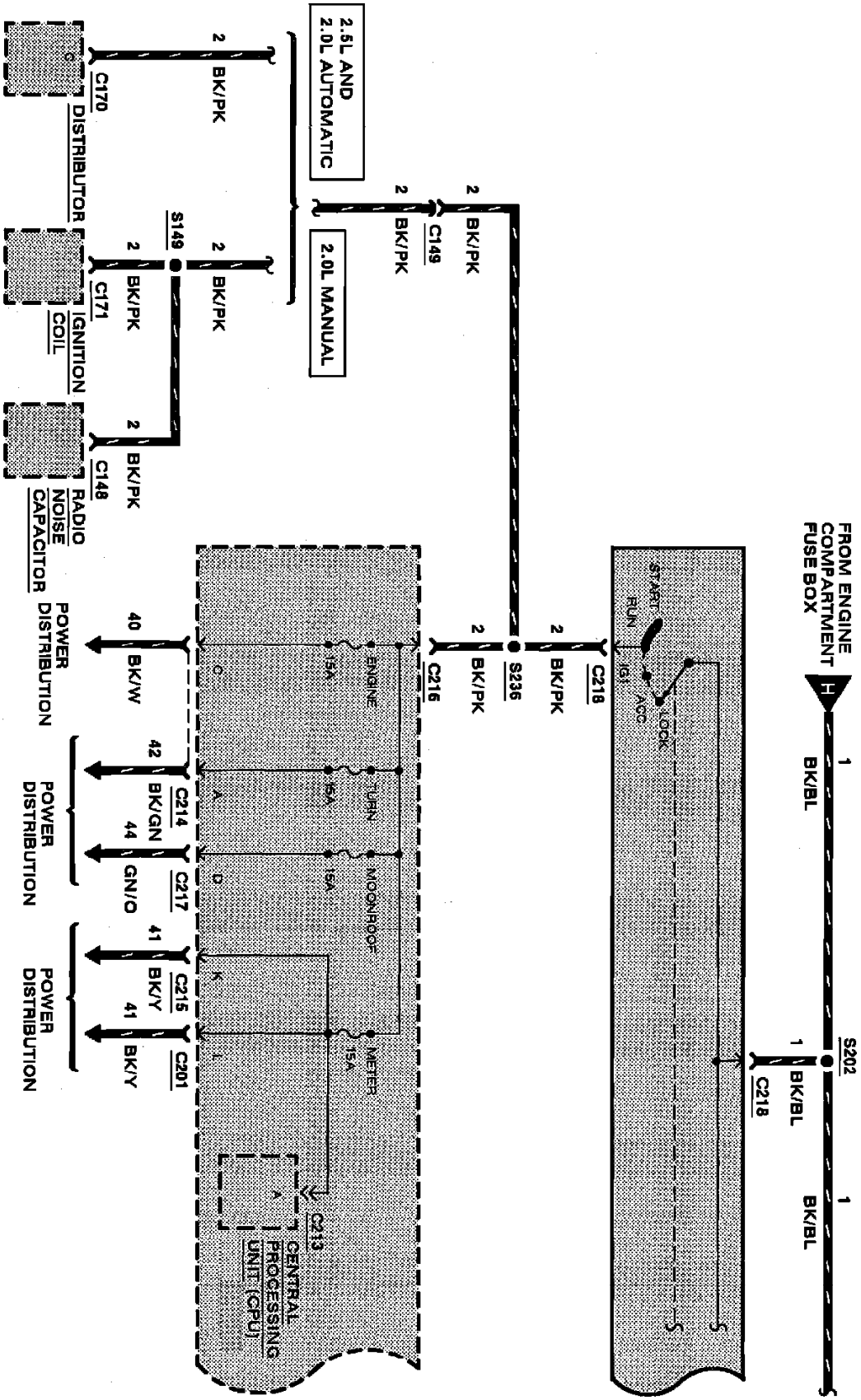

Power Distribution

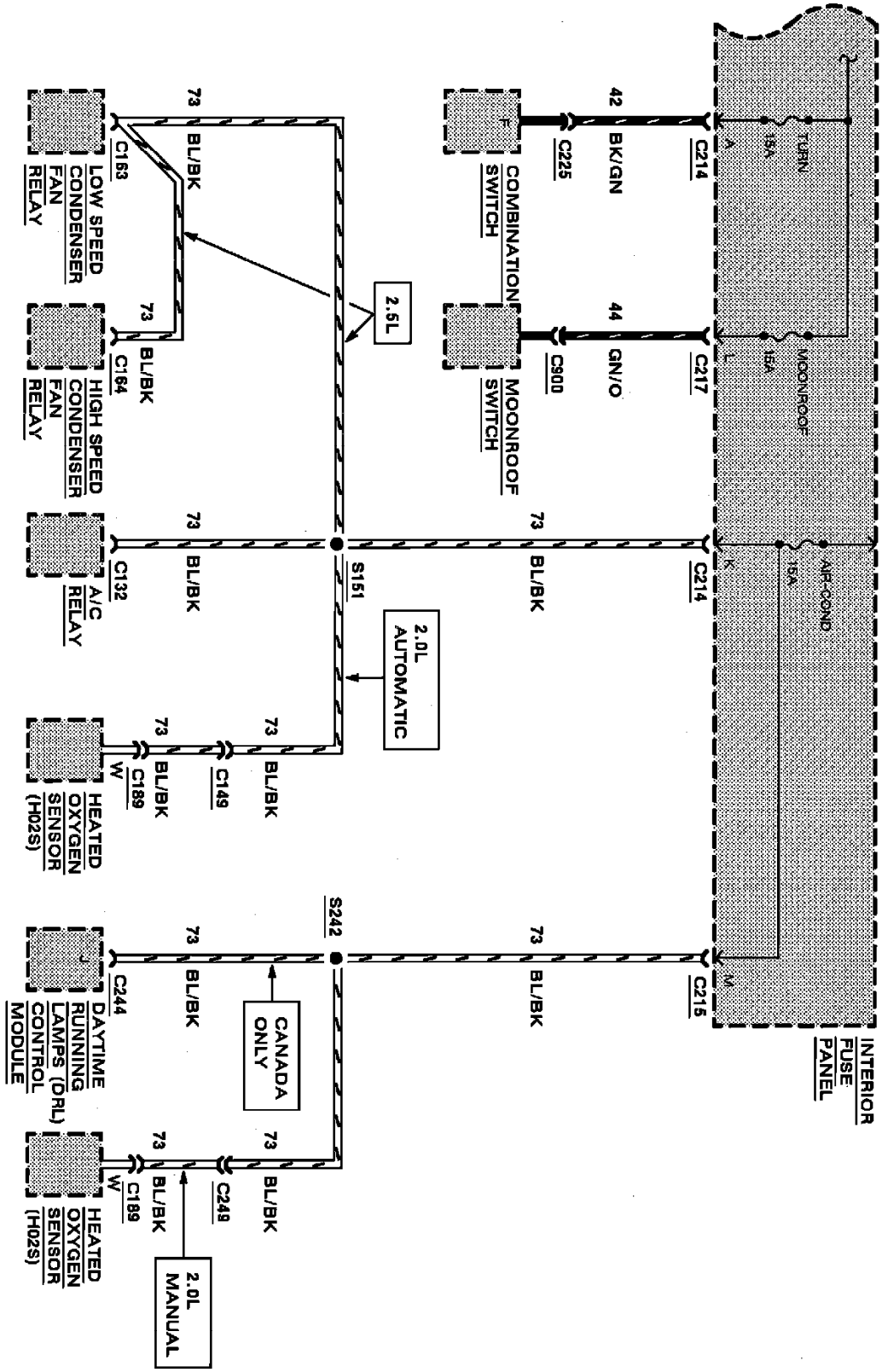

Power Distribution

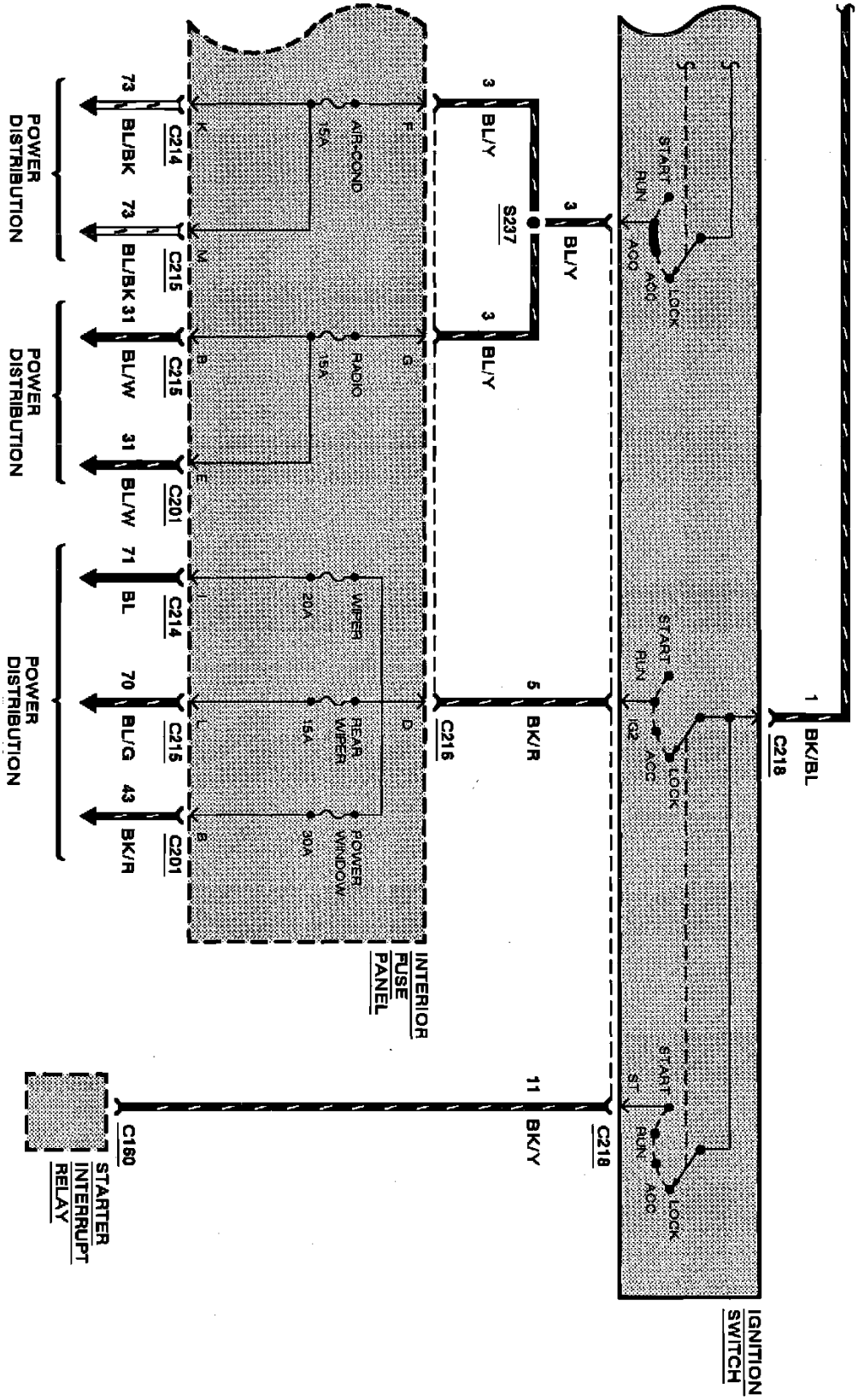

Power Distribution

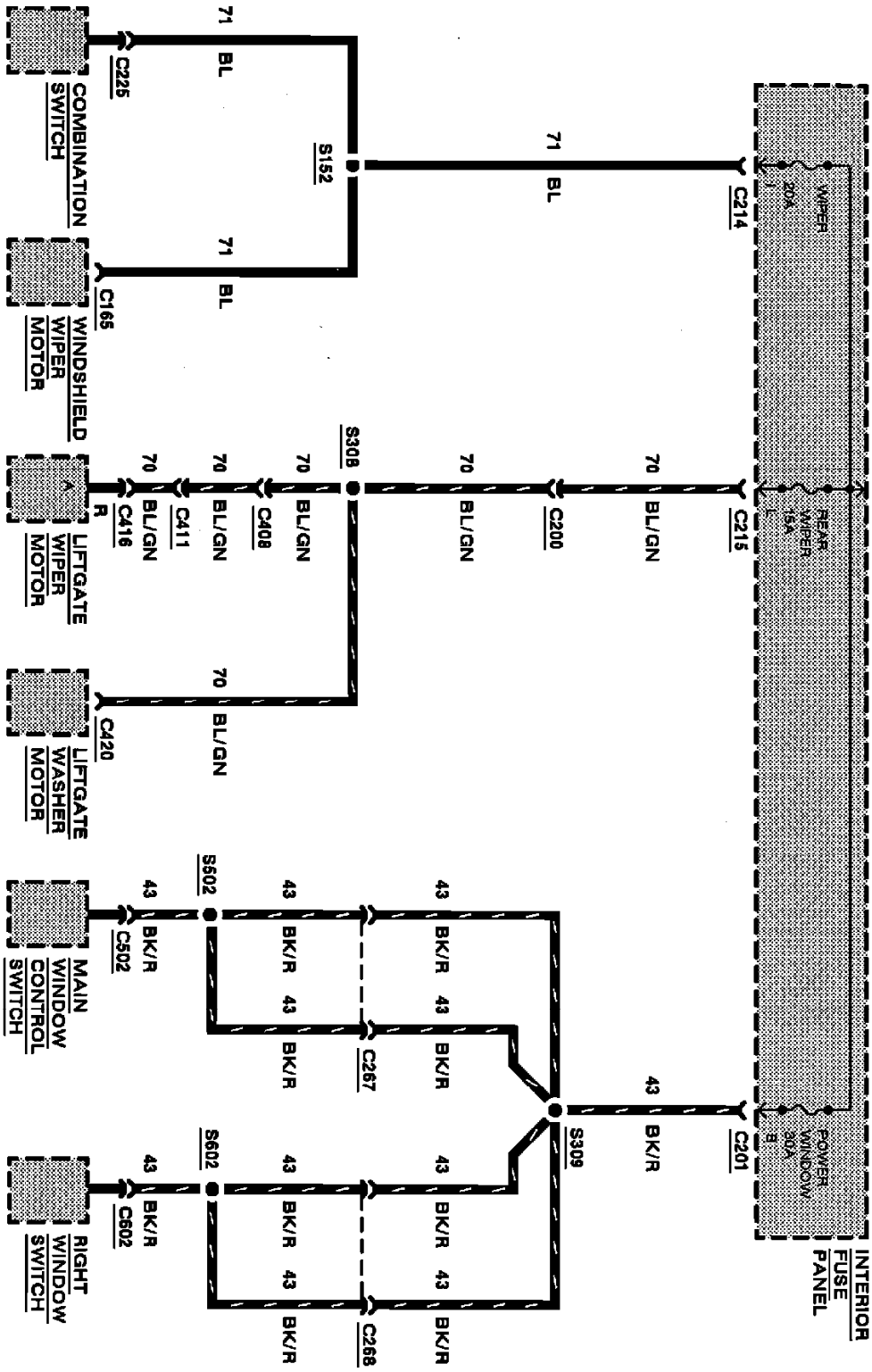

Power Distribution

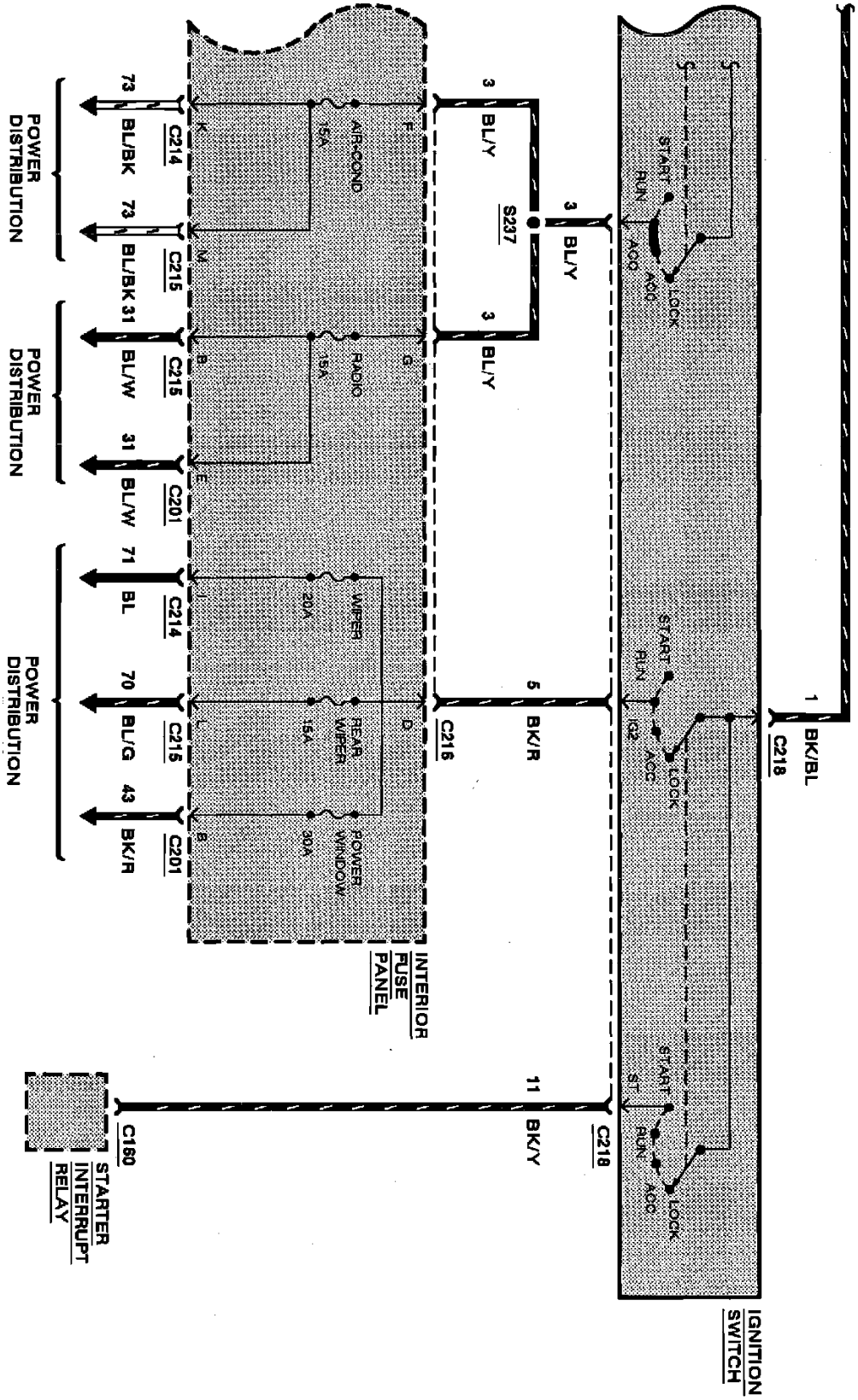

Power Distribution

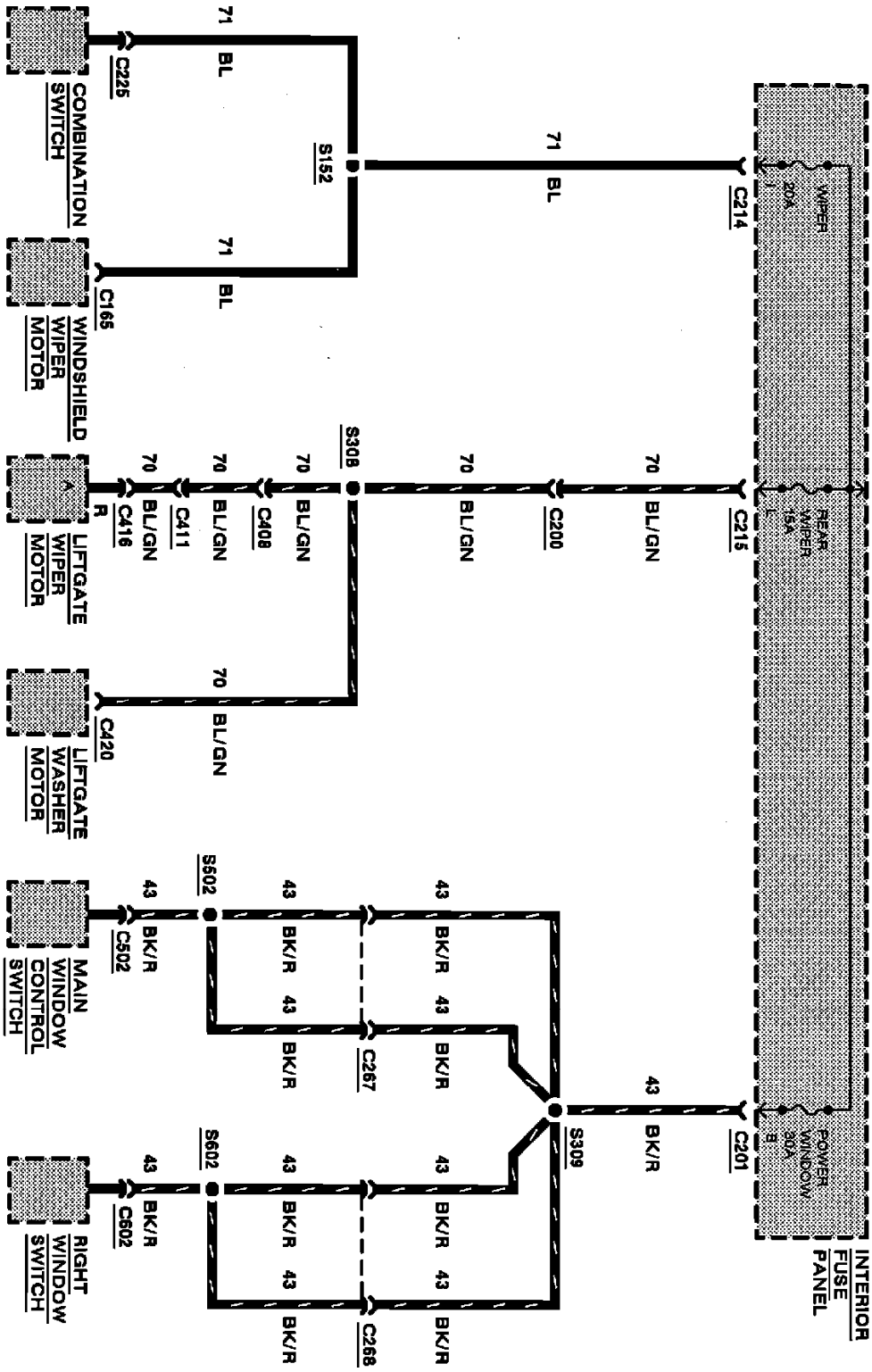

Power Distribution

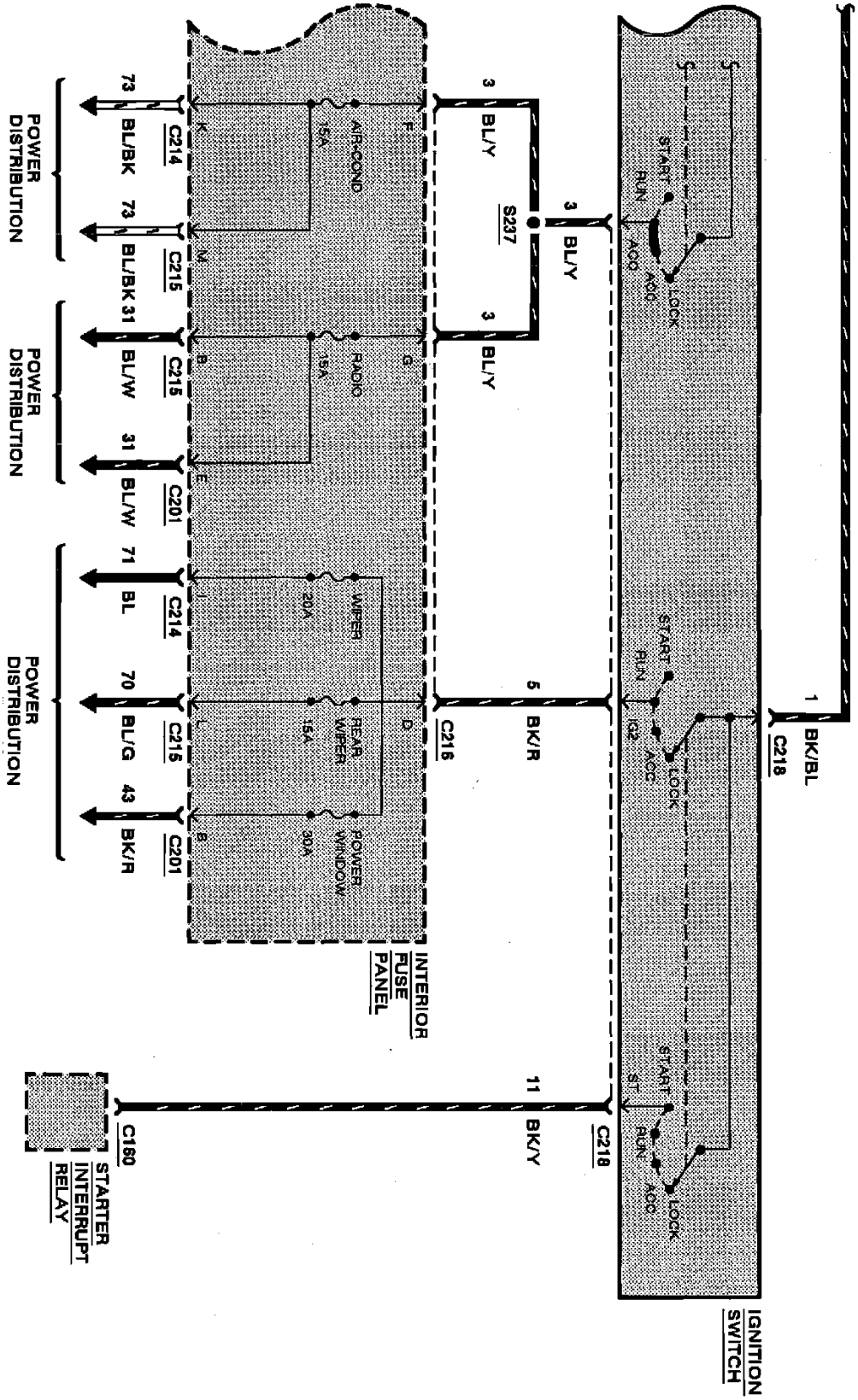

Power Distribution

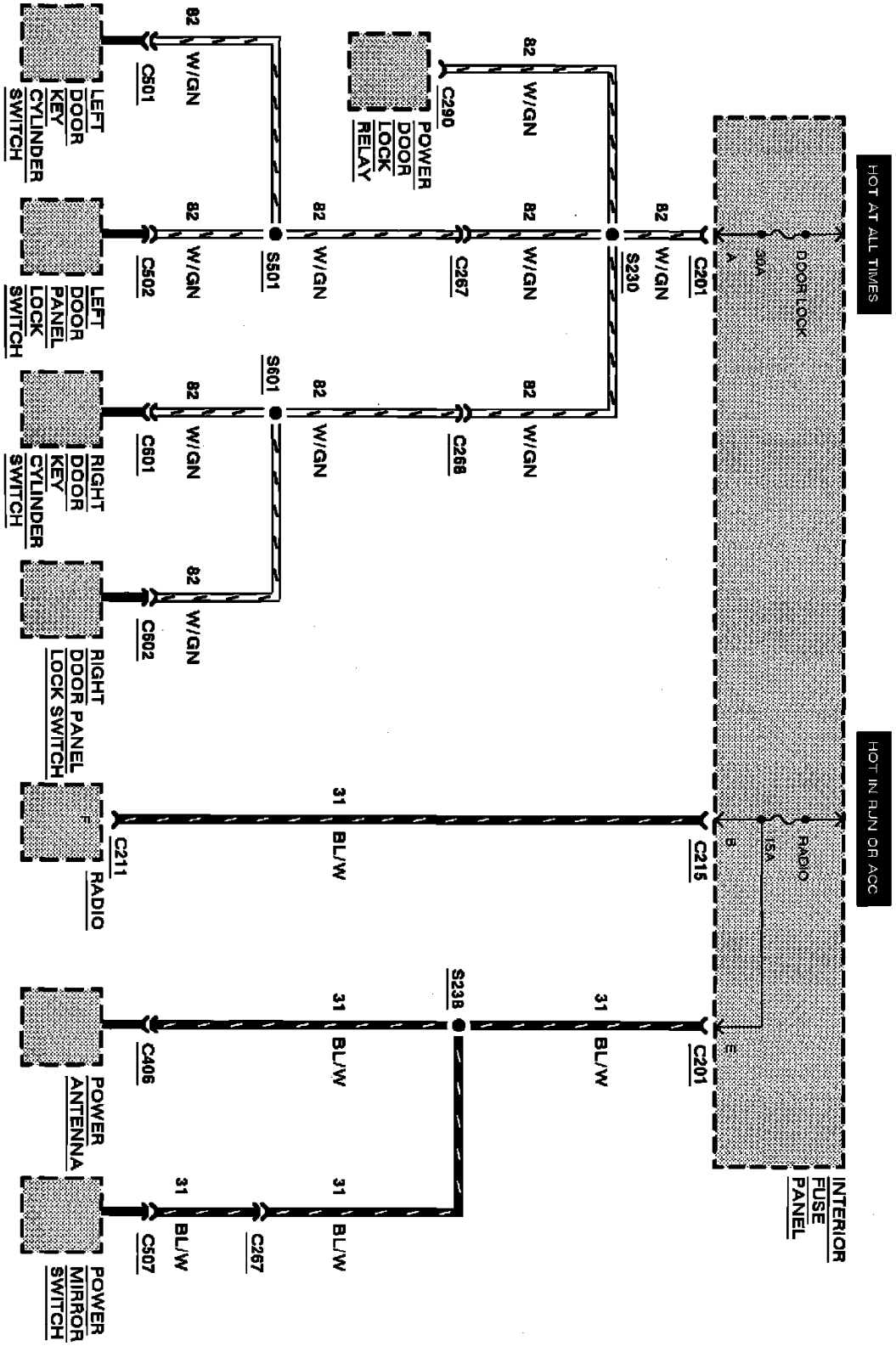

Power Distribution

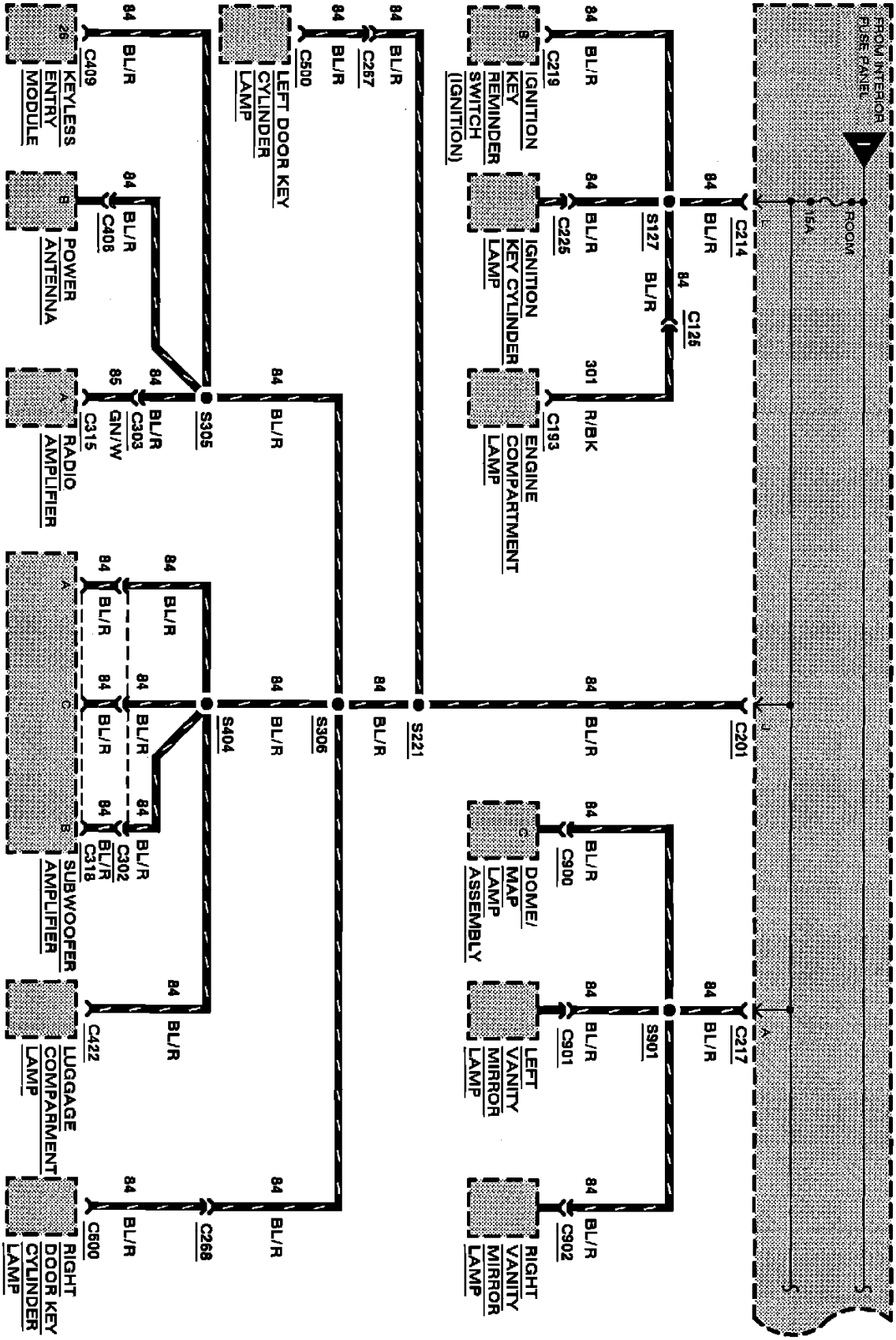

Power Distribution

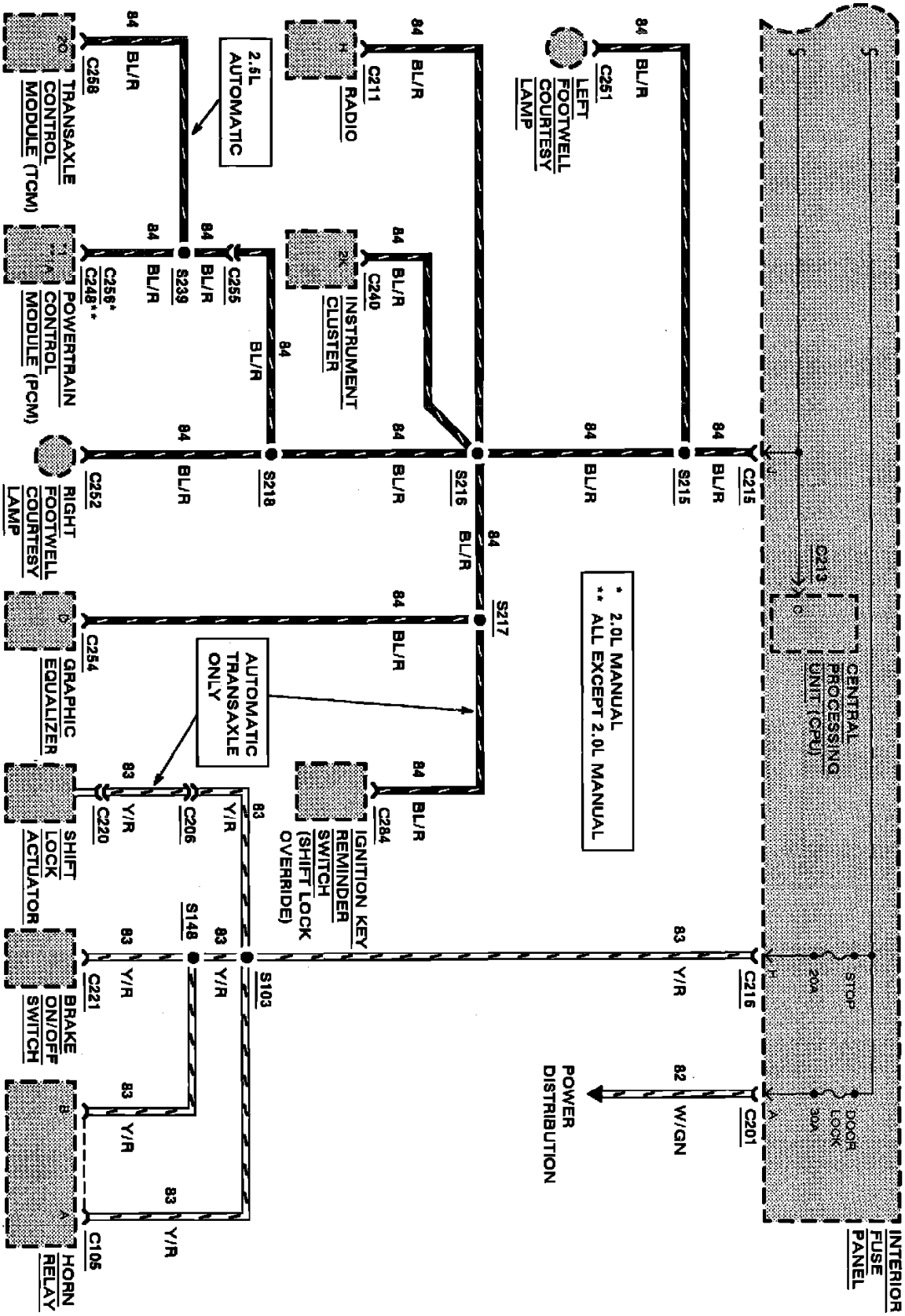

Power Distribution

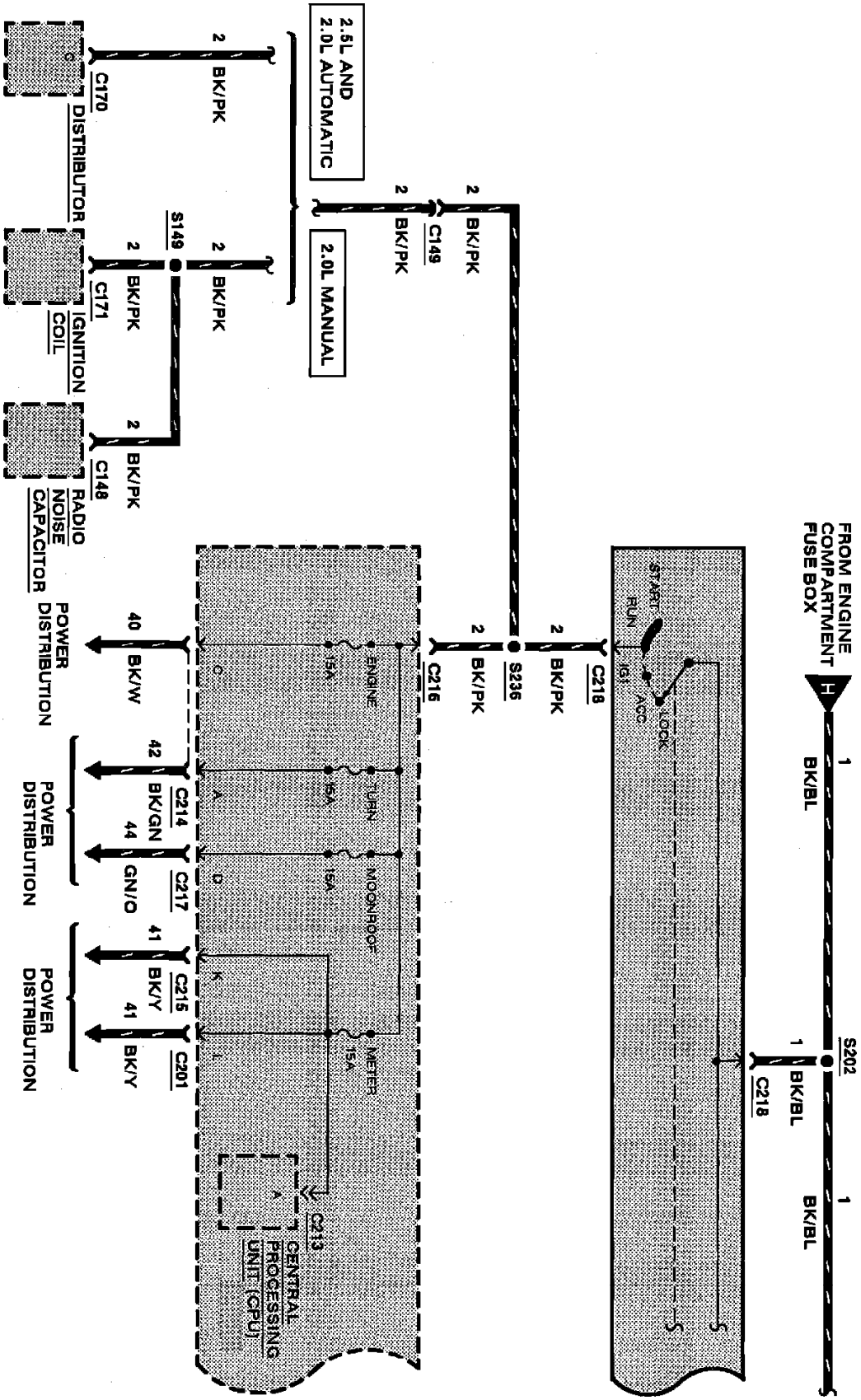

Power Distribution

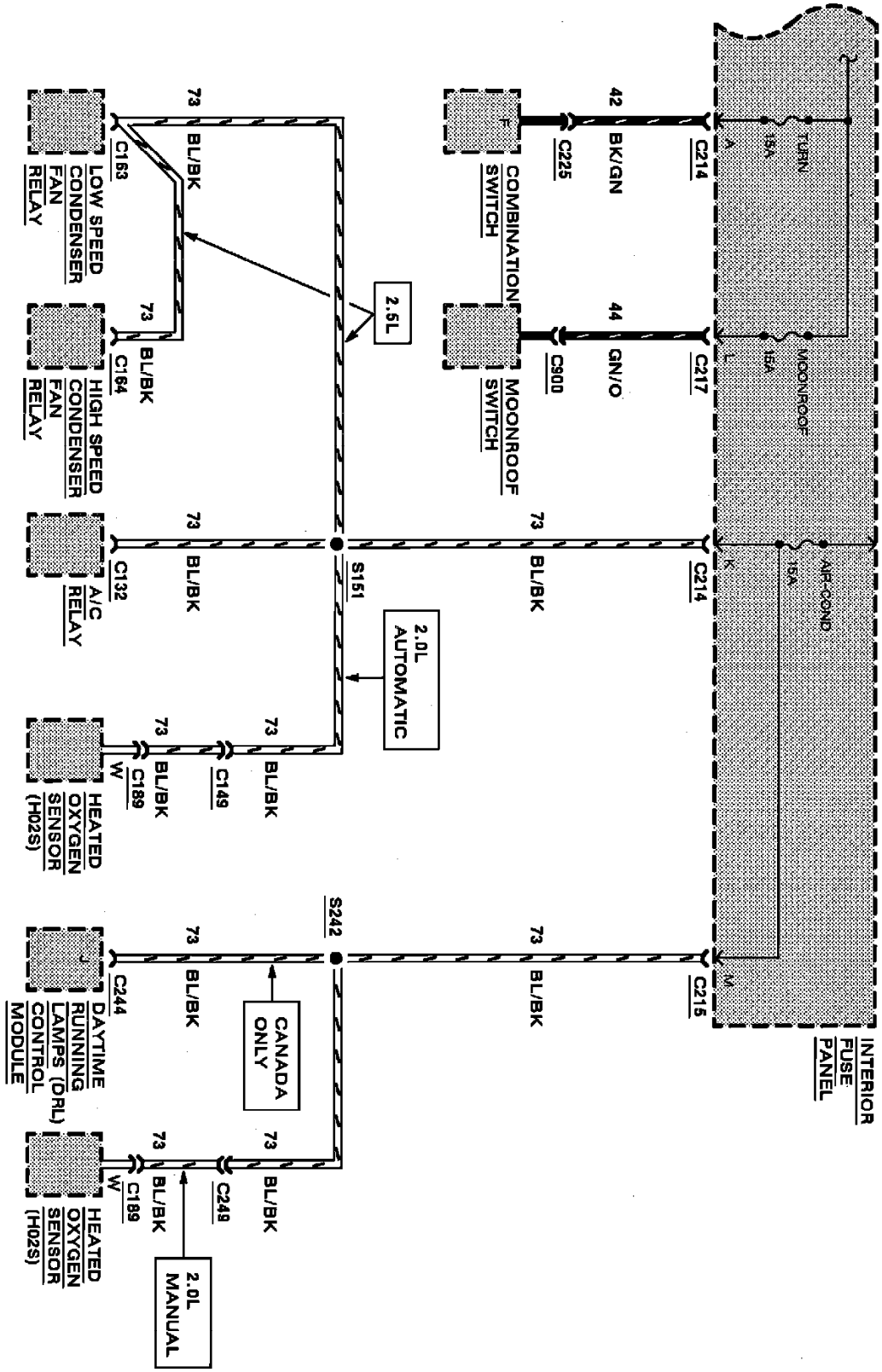

Power Distribution

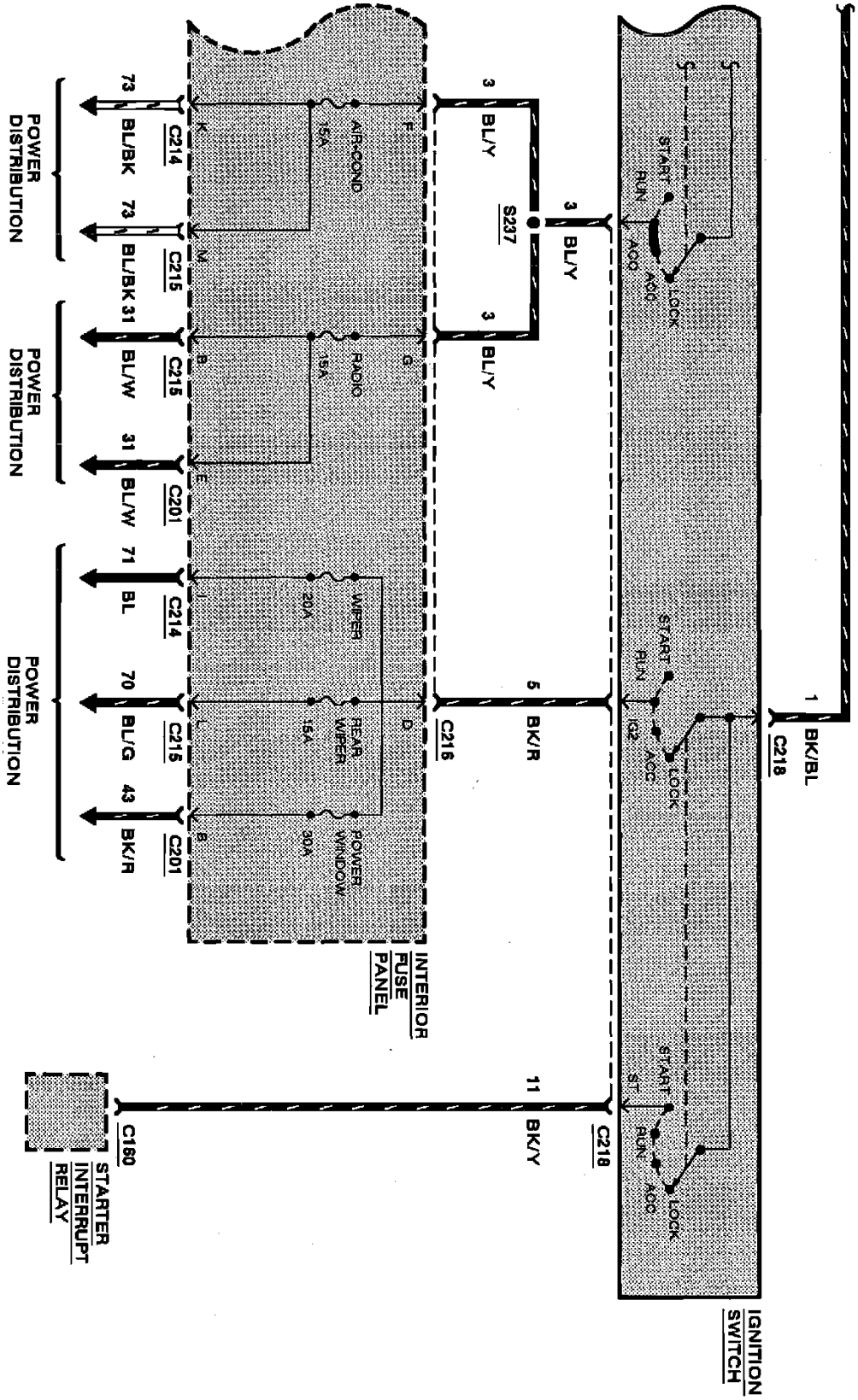

Power Distribution

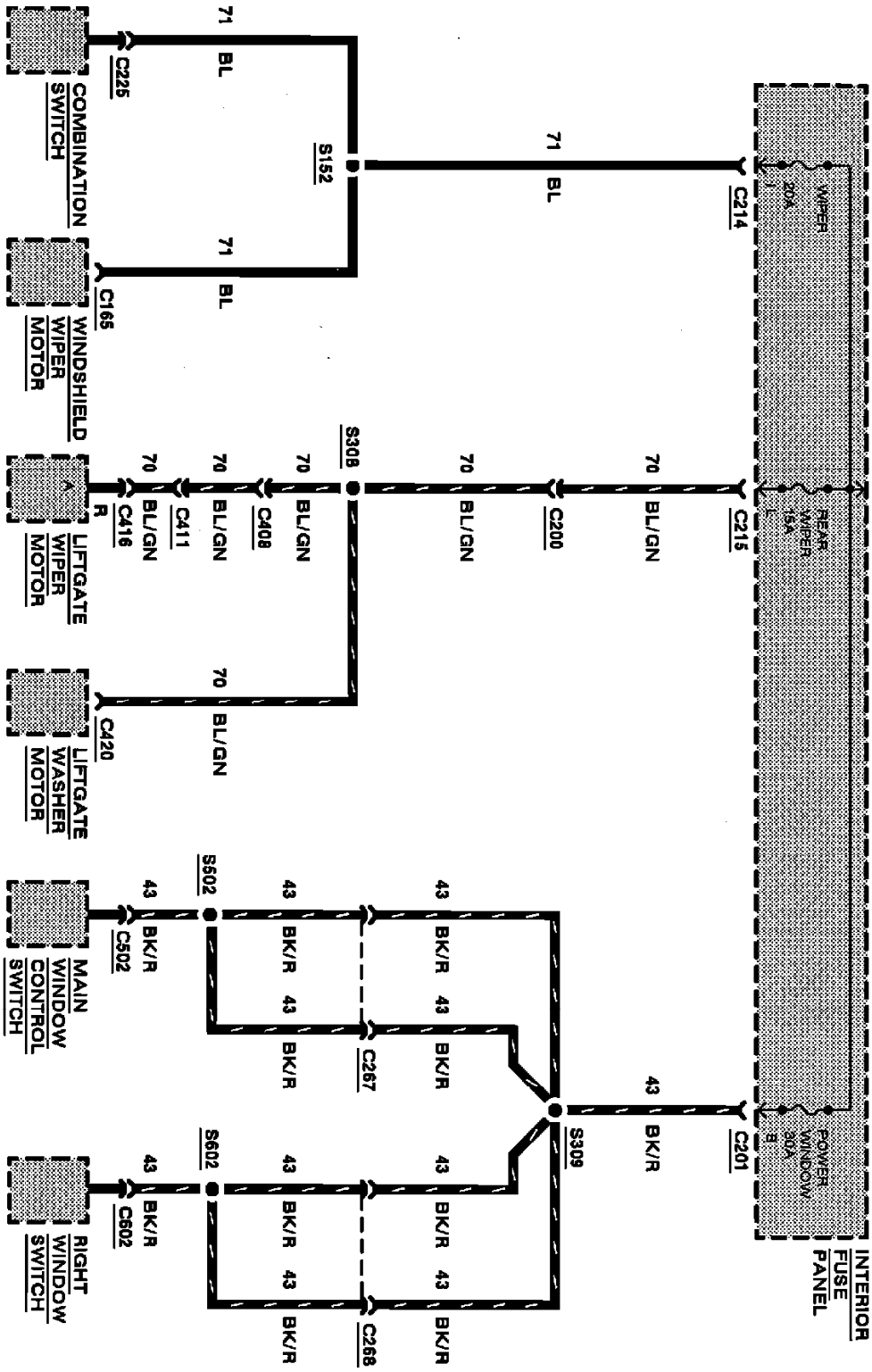

Power Distribution

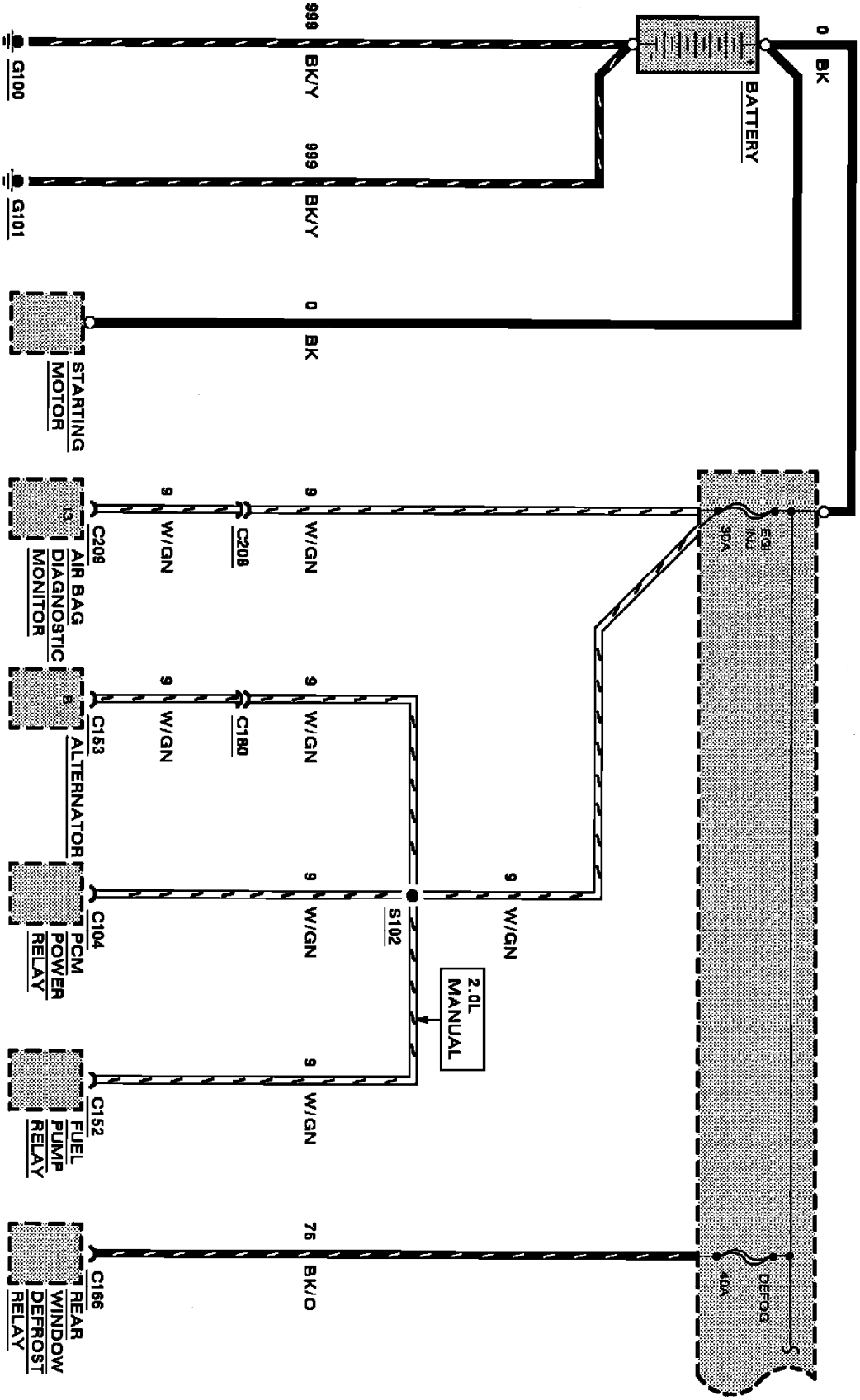

Power Distribution

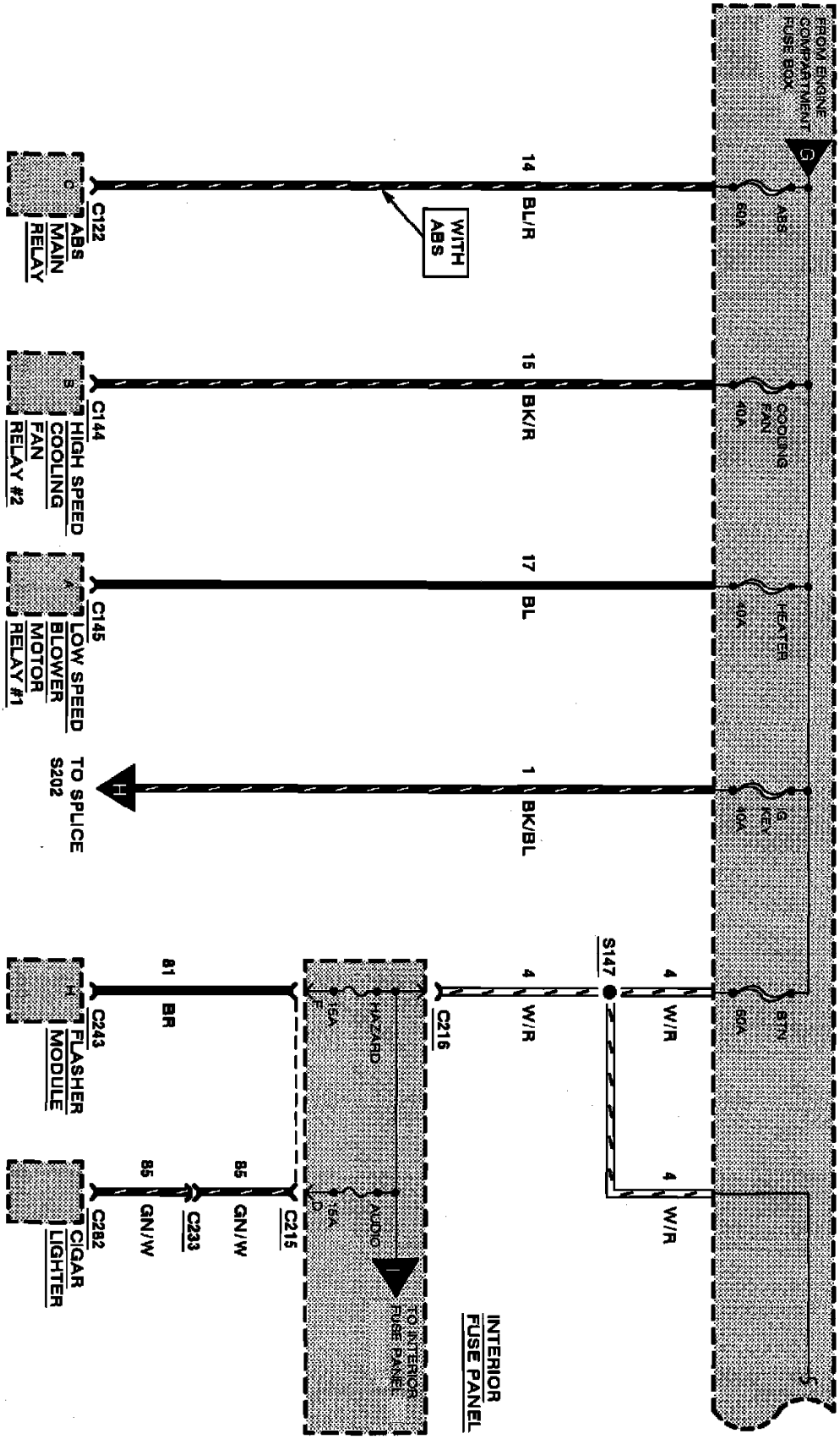

Power Distribution

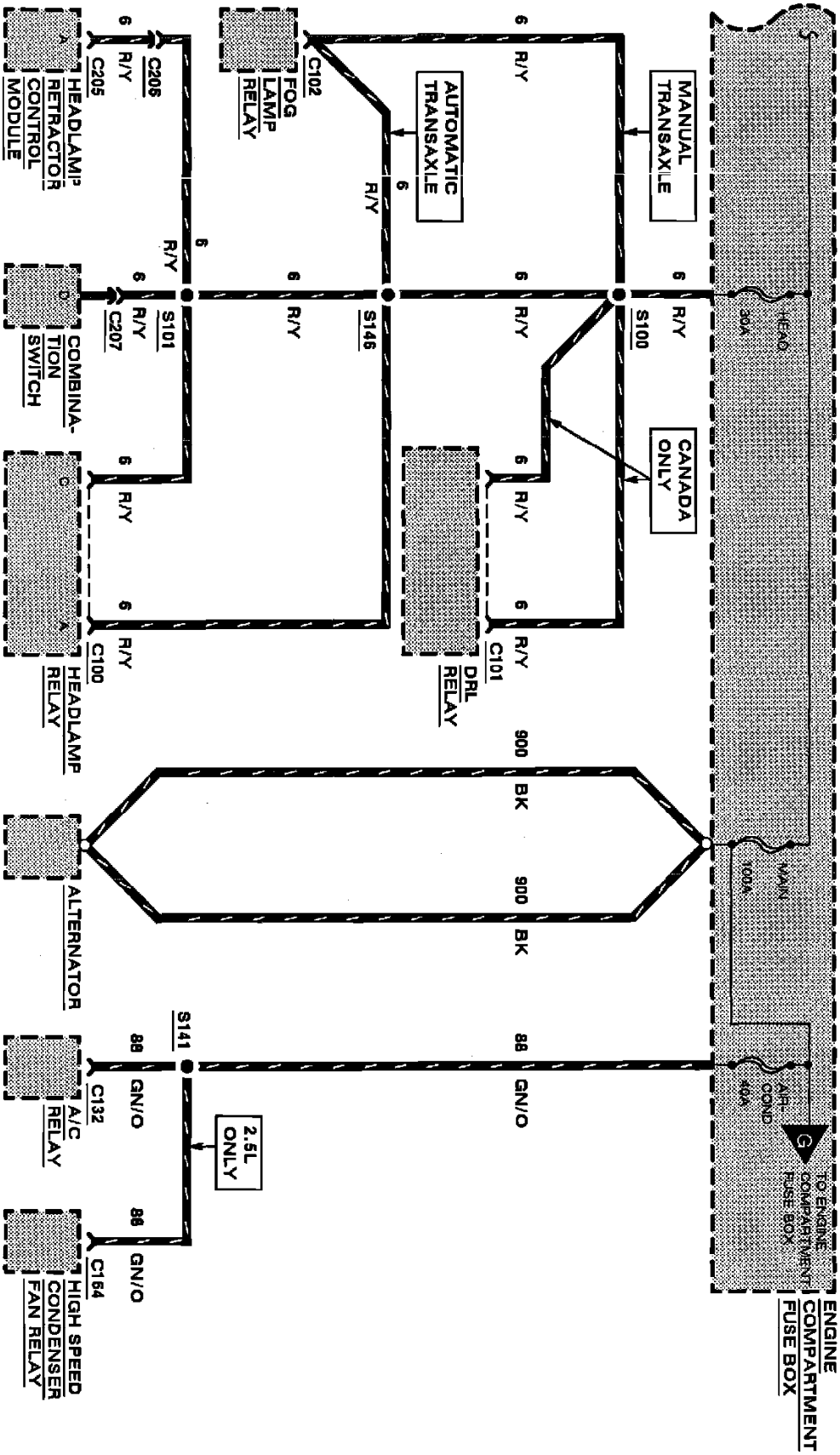

Power Distribution

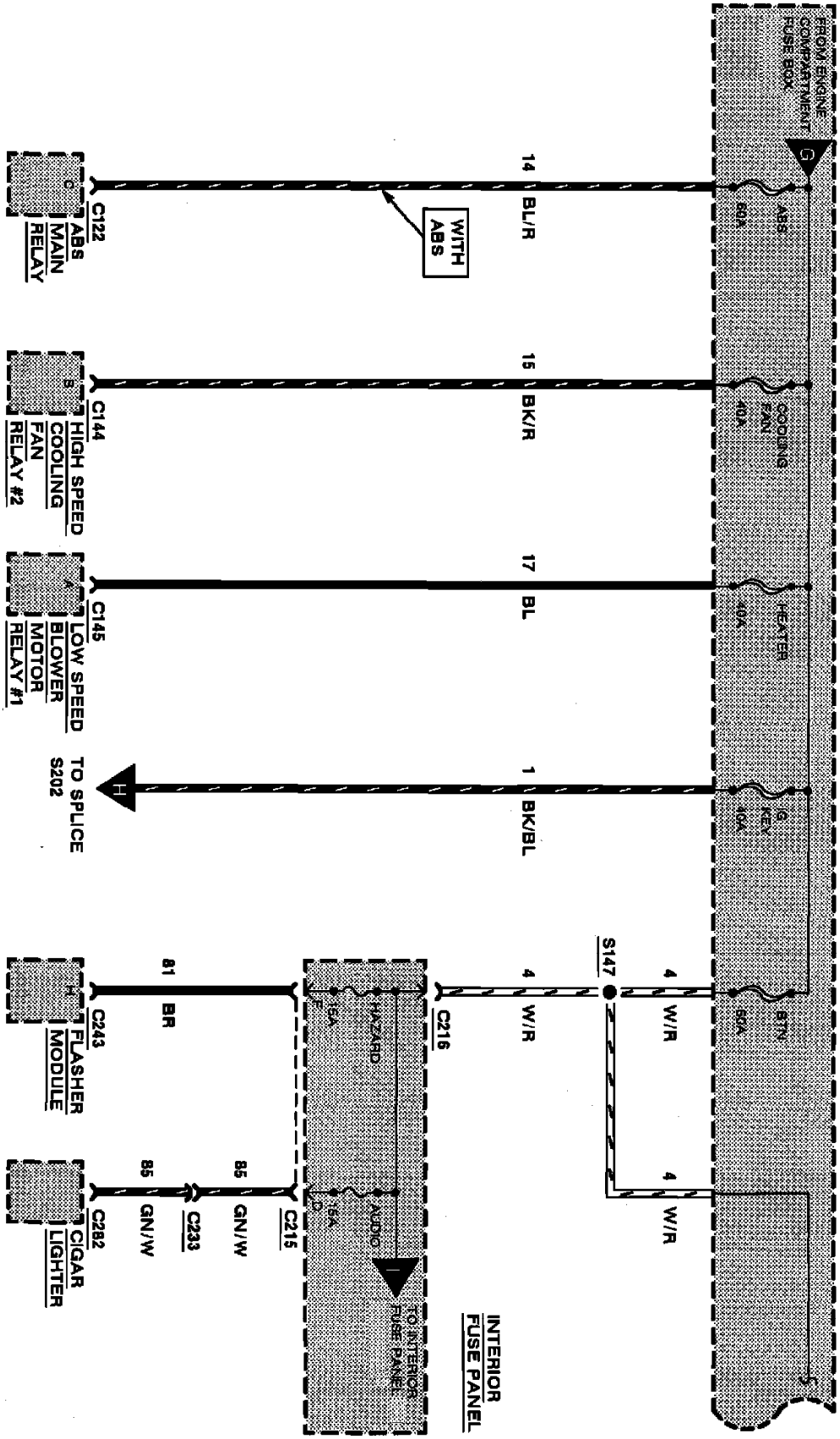

Power Distribution

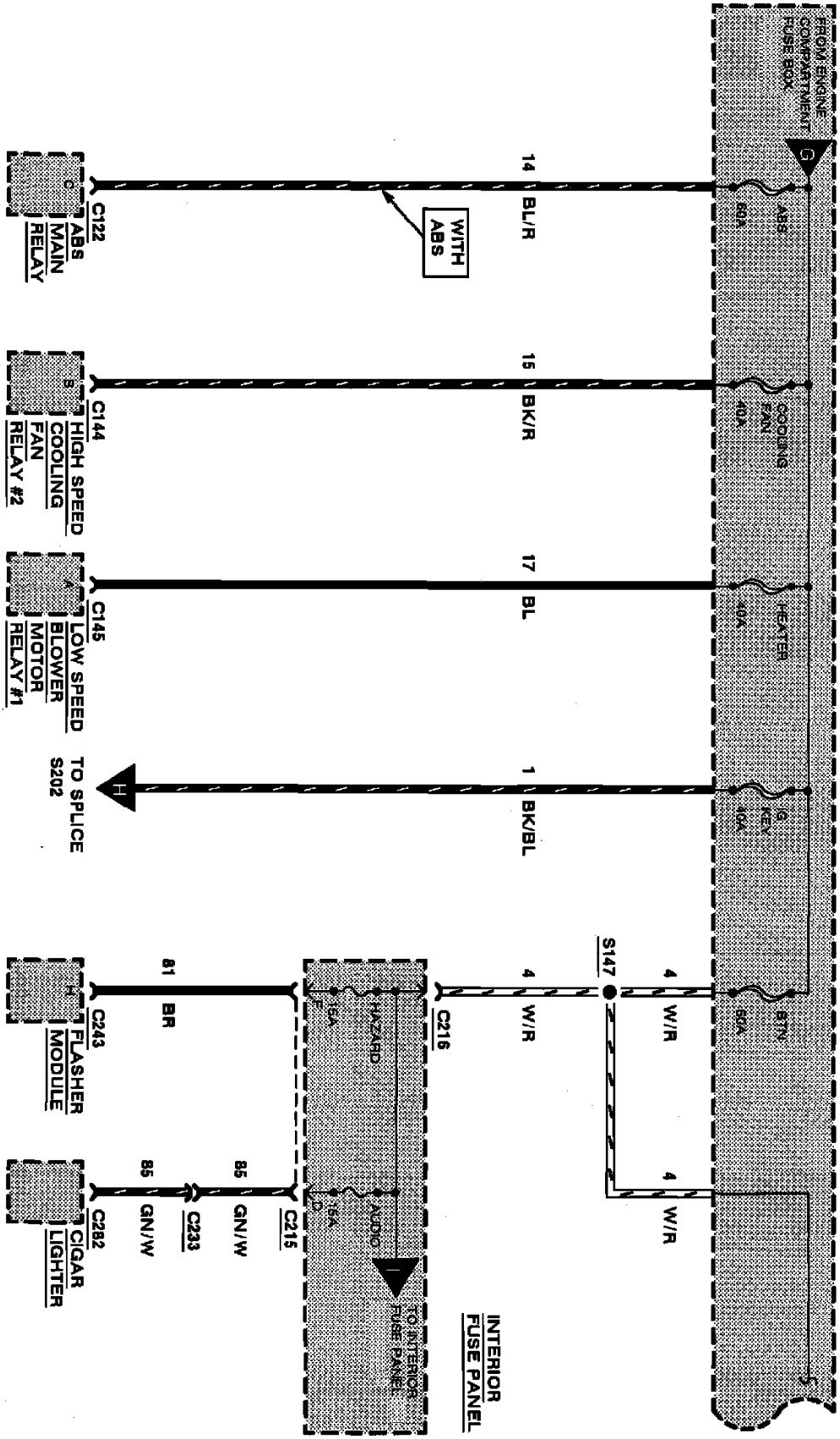

Power Distribution

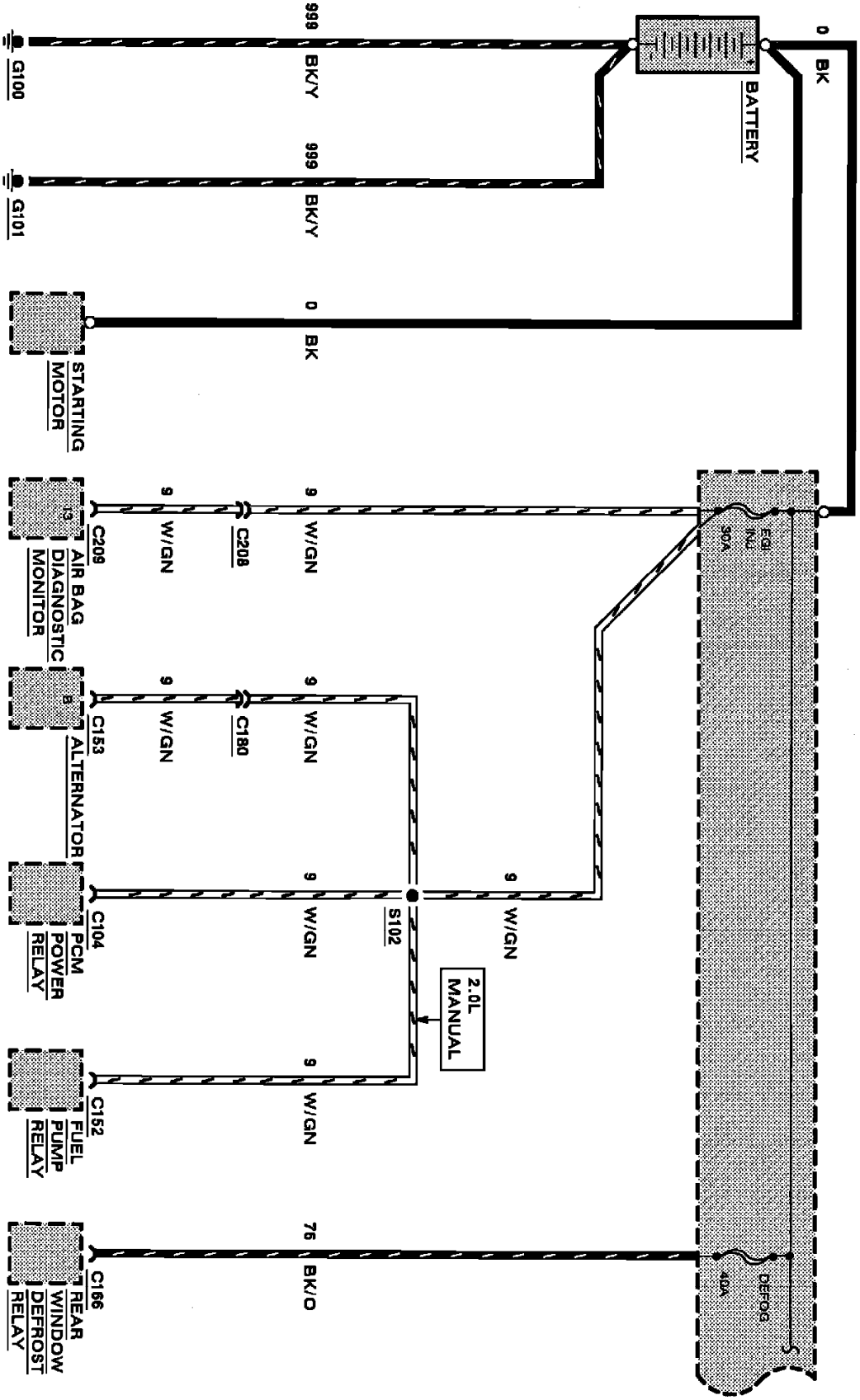

Power Distribution

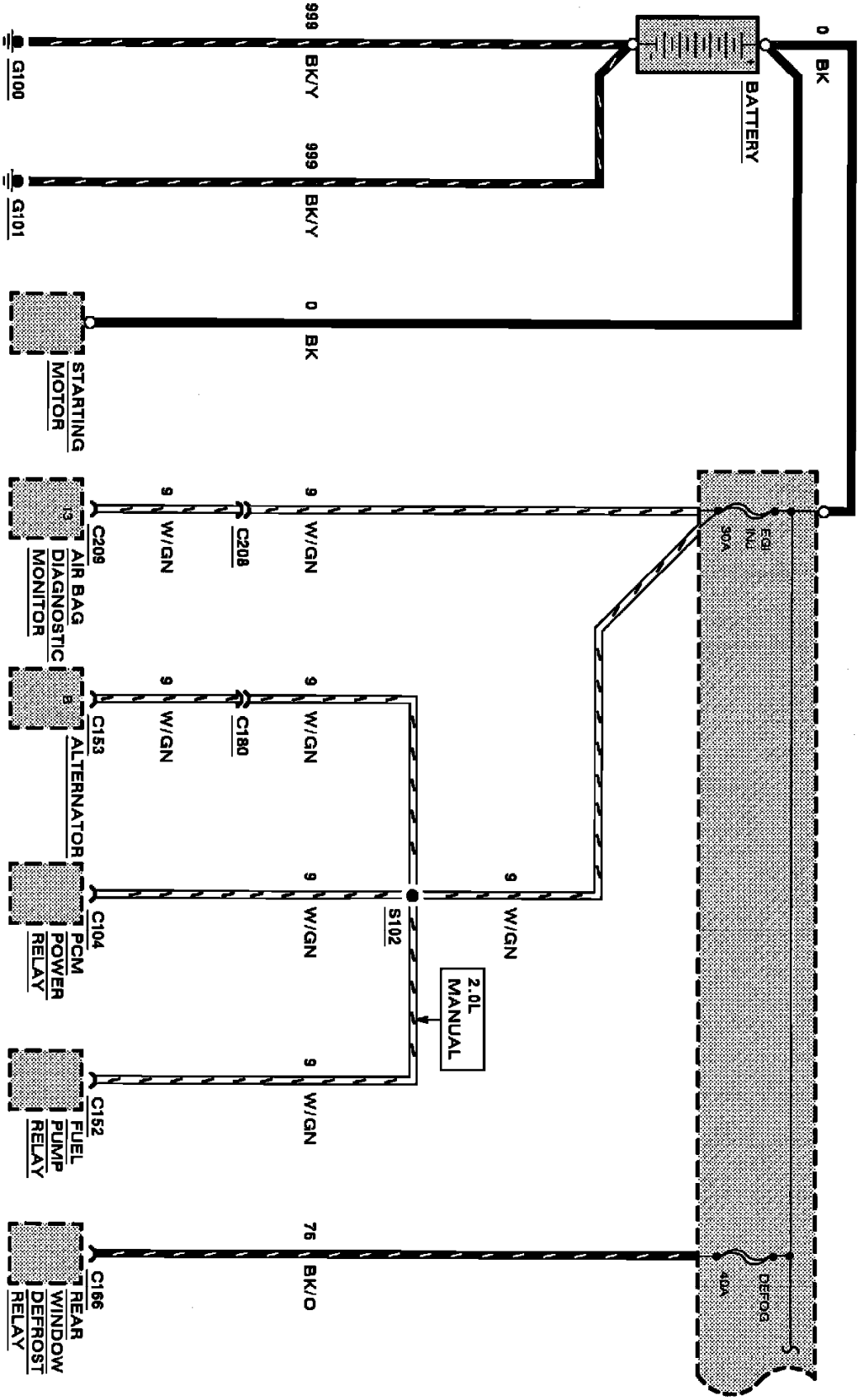

Power Distribution

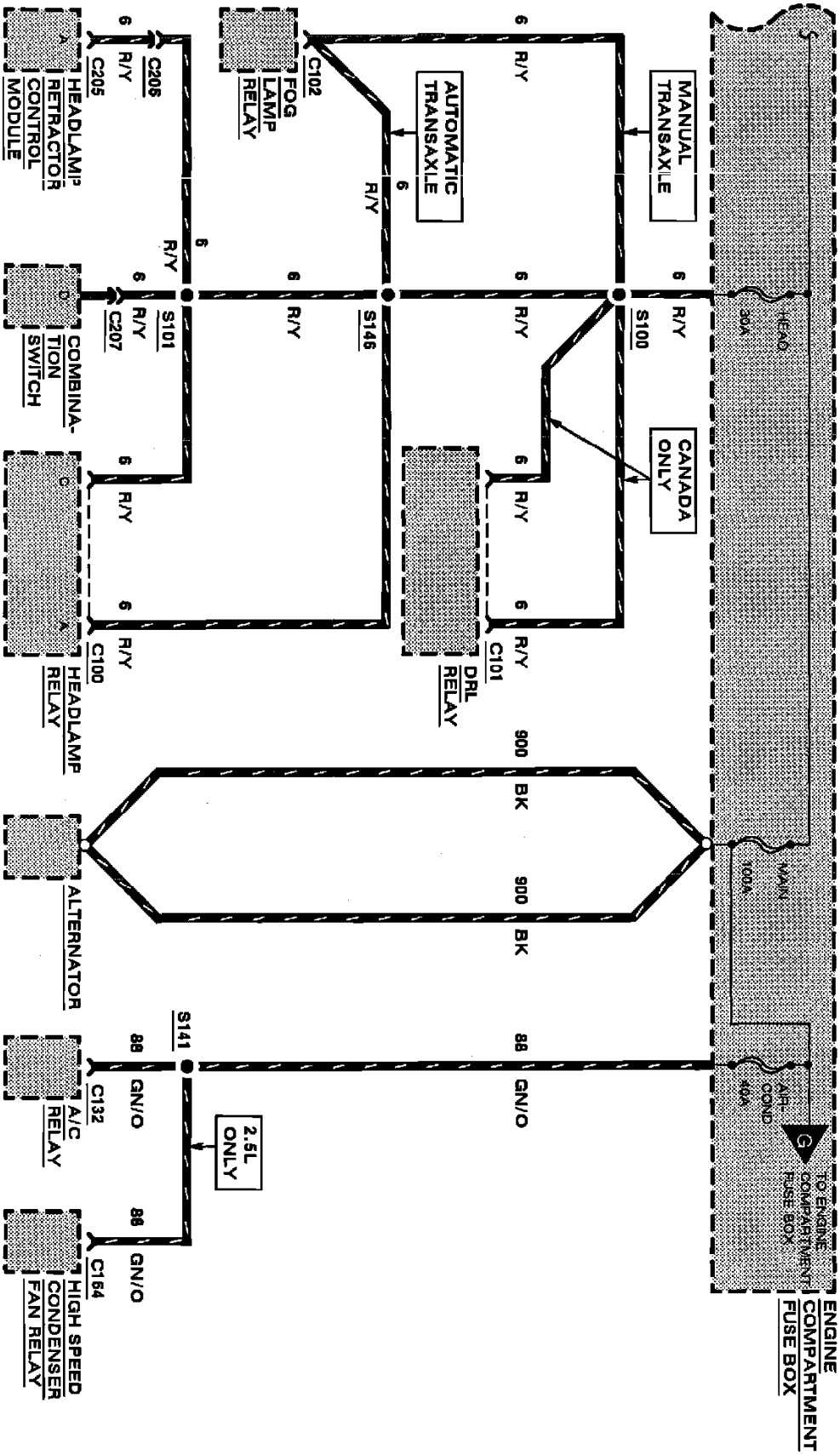

Power Distribution

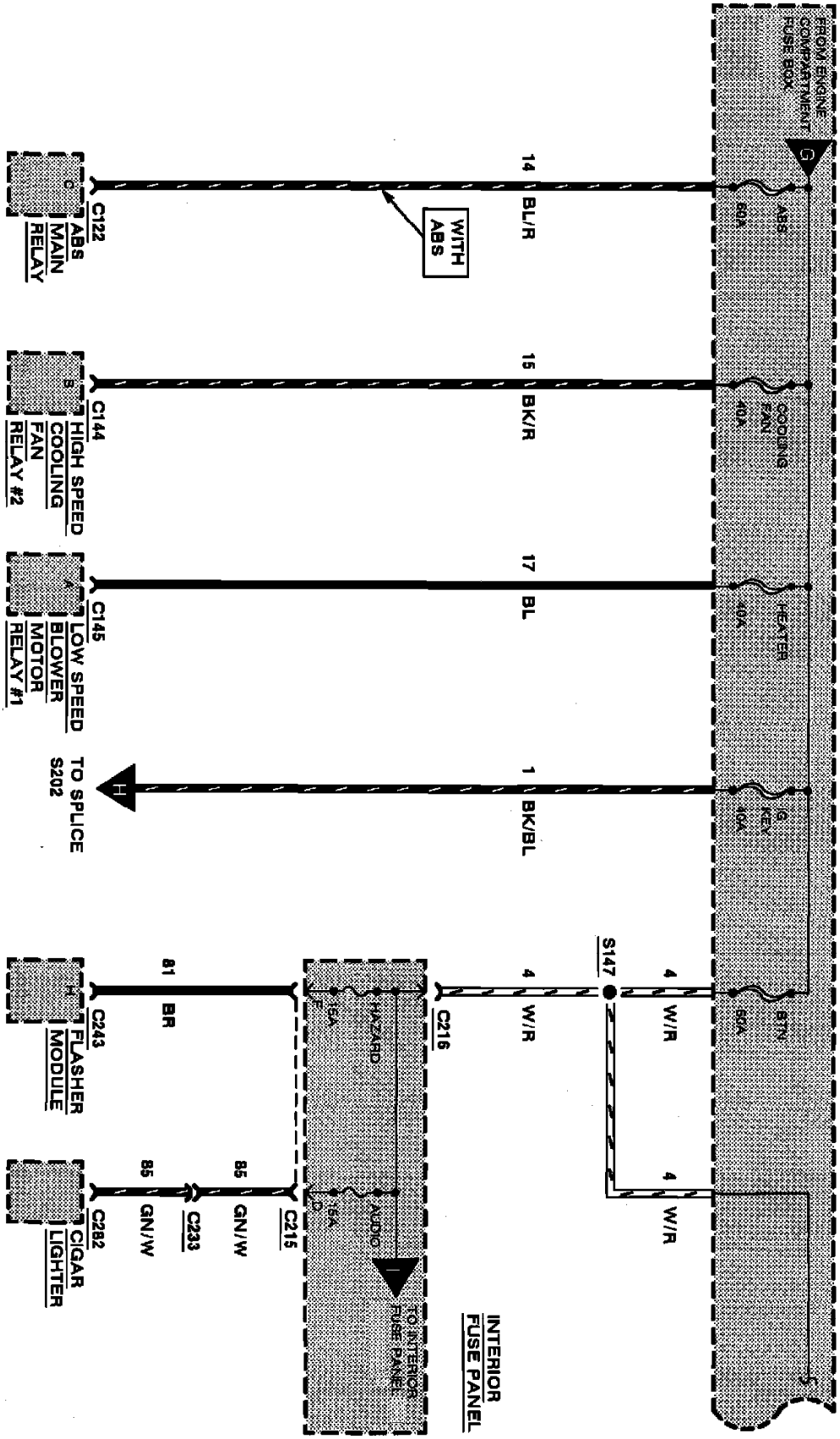

Power Distribution

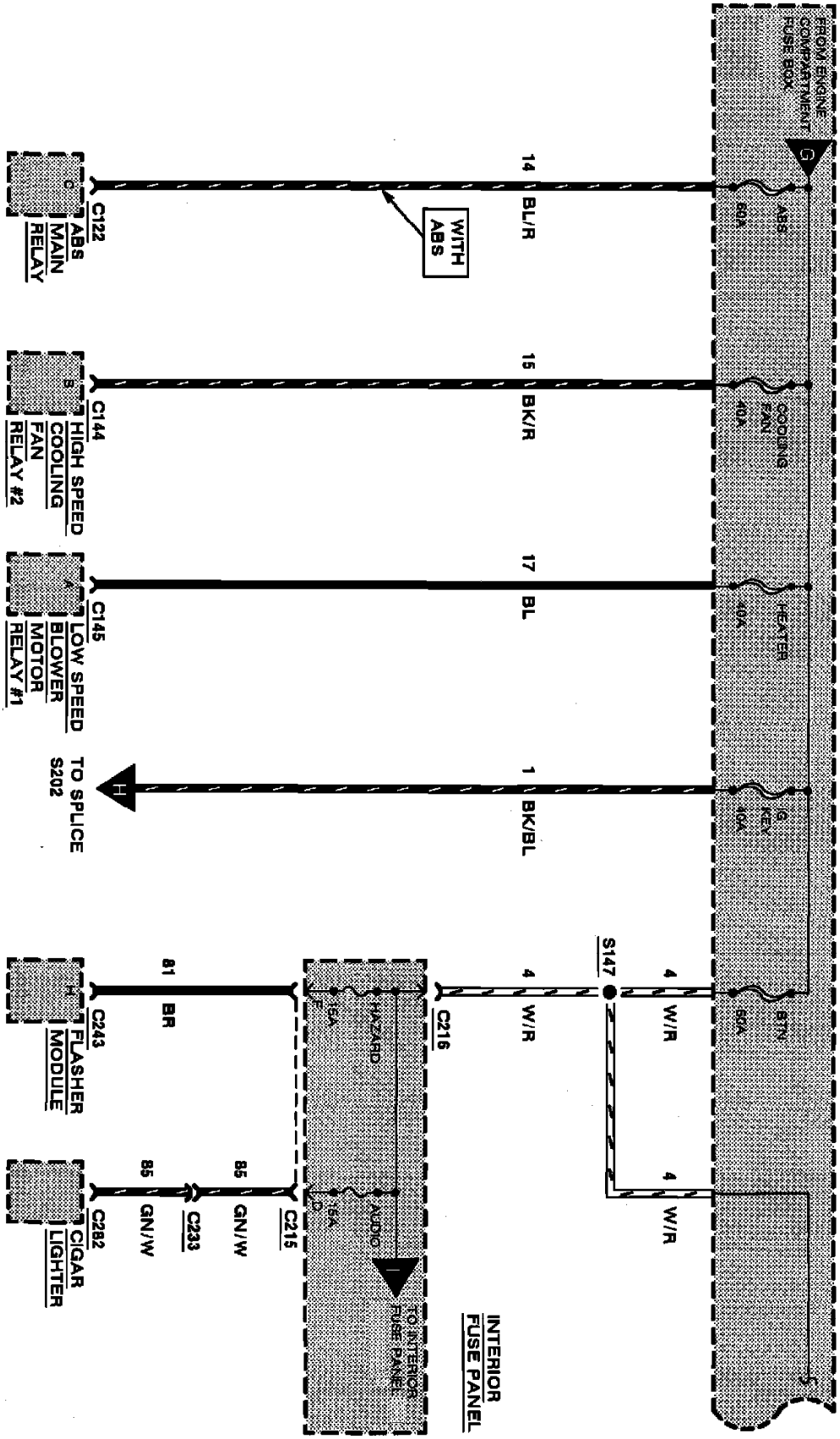

Power Distribution

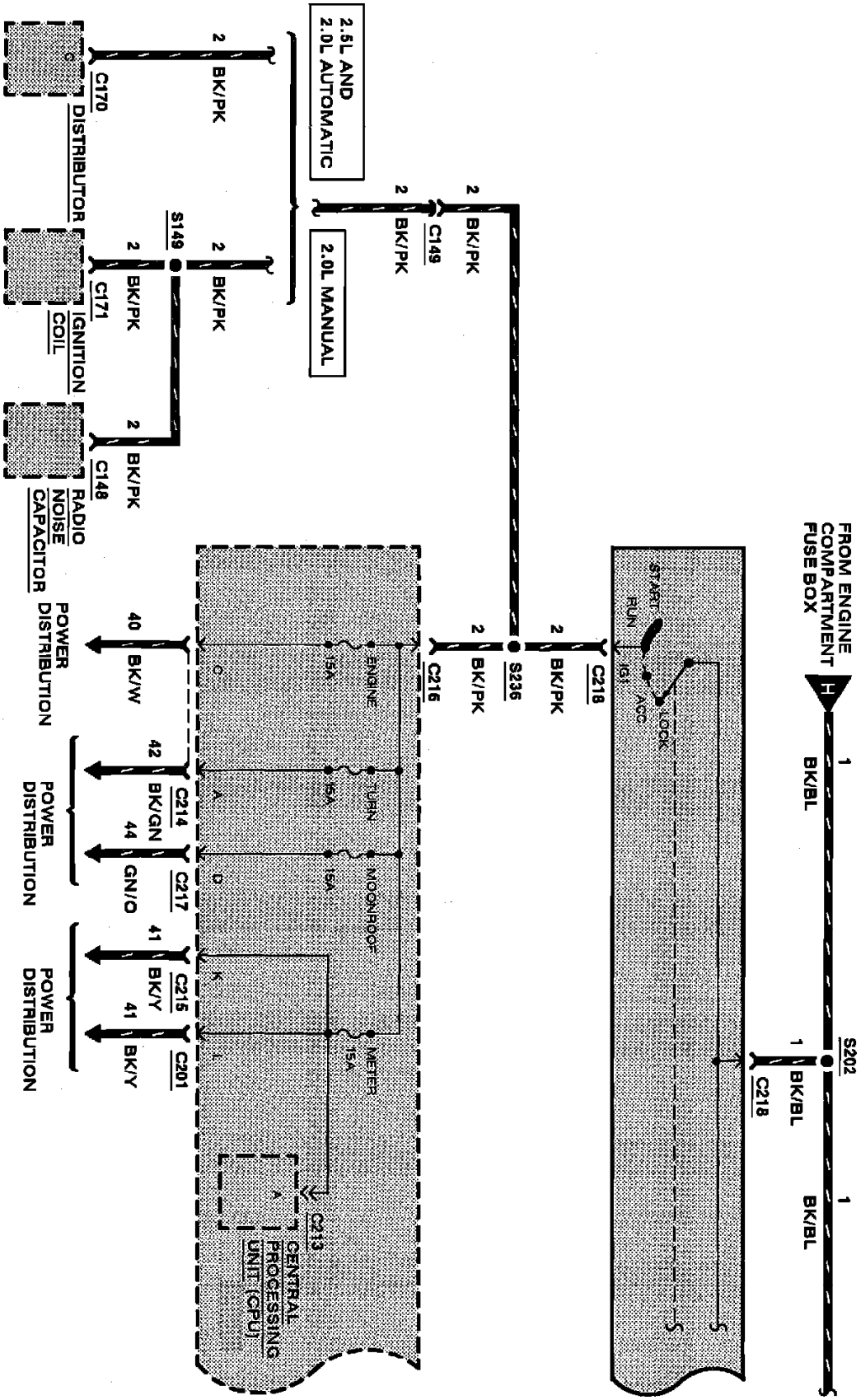

Power Distribution

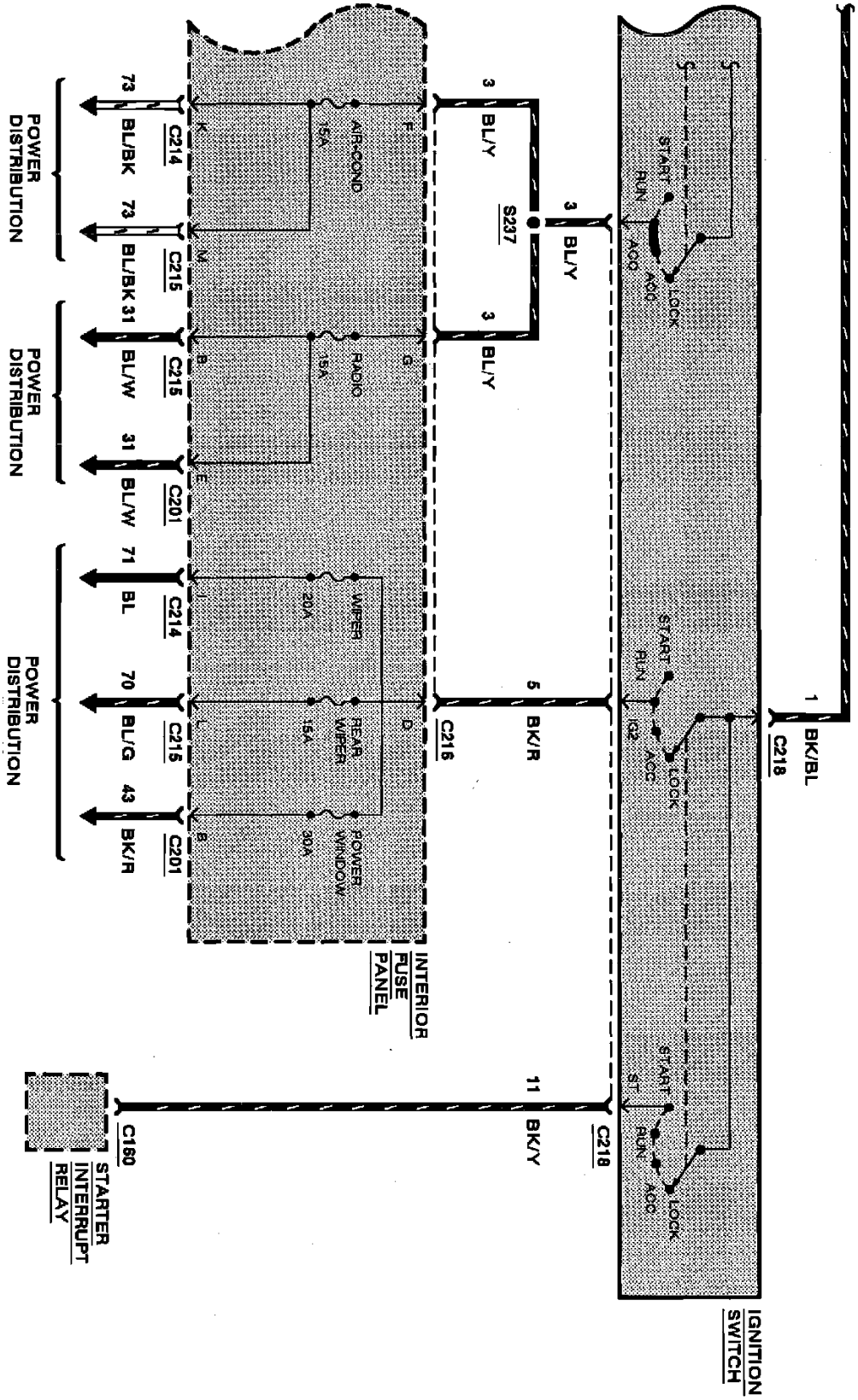

Power Distribution

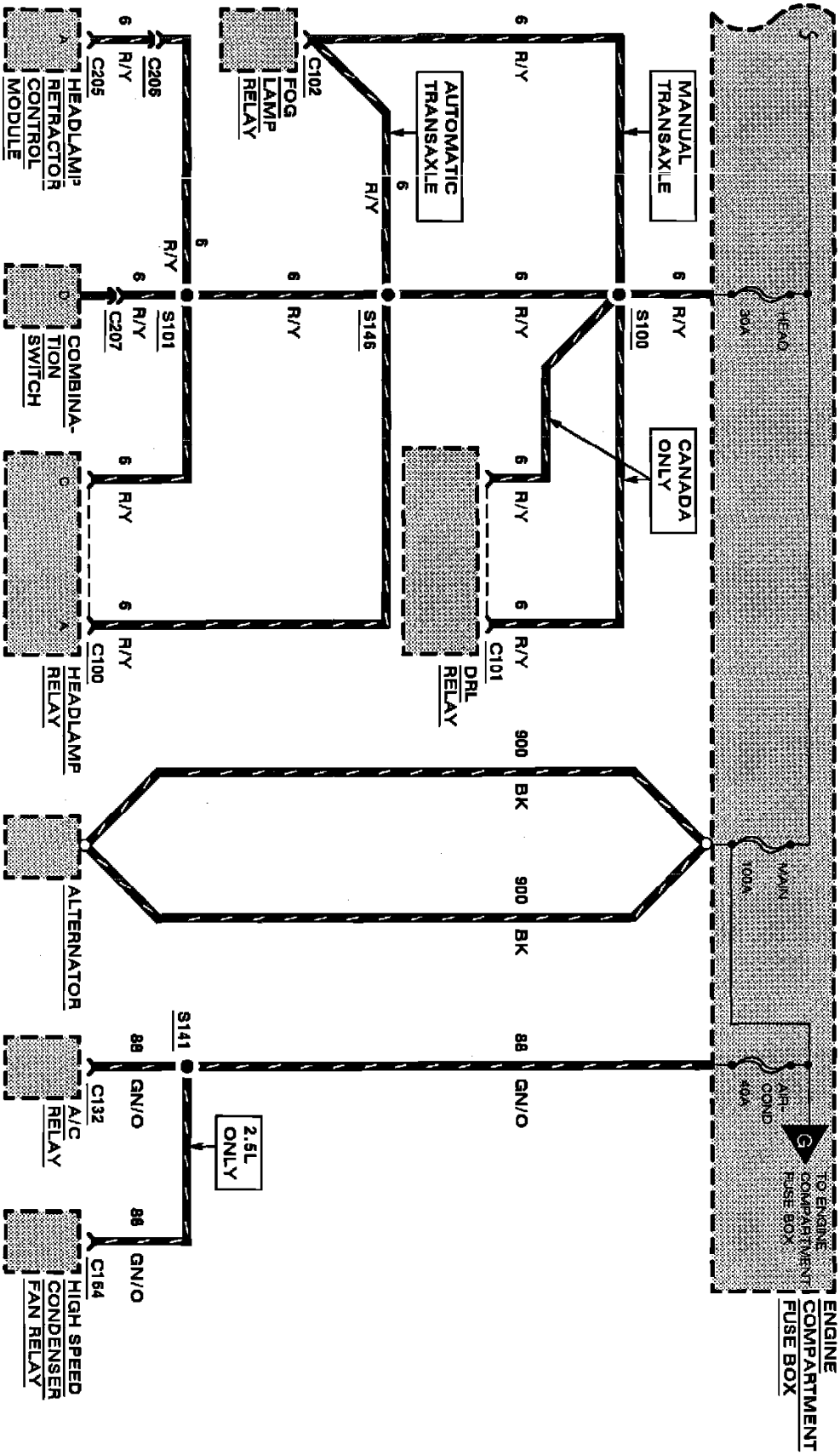

Power Distribution

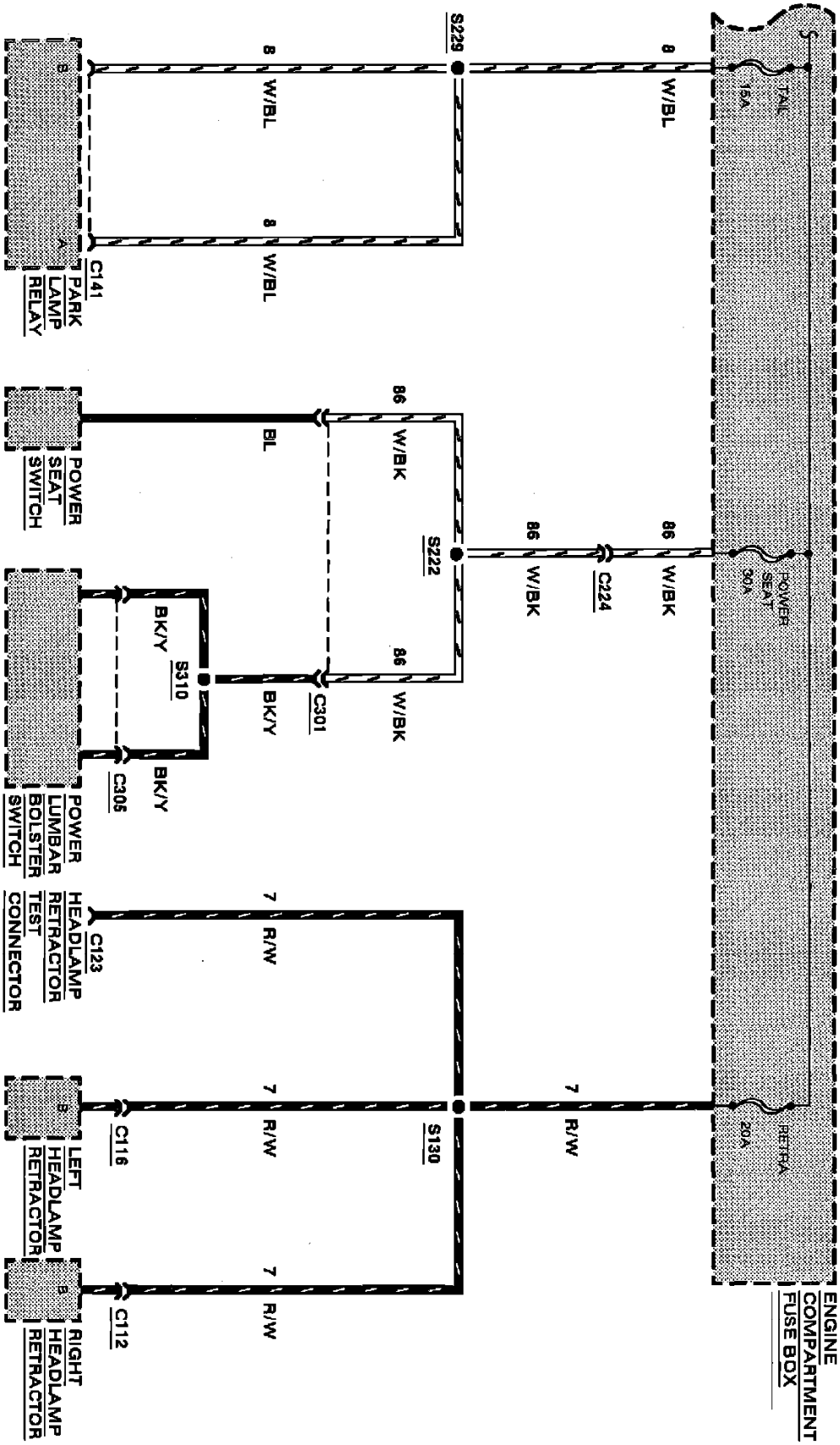

Power Distribution

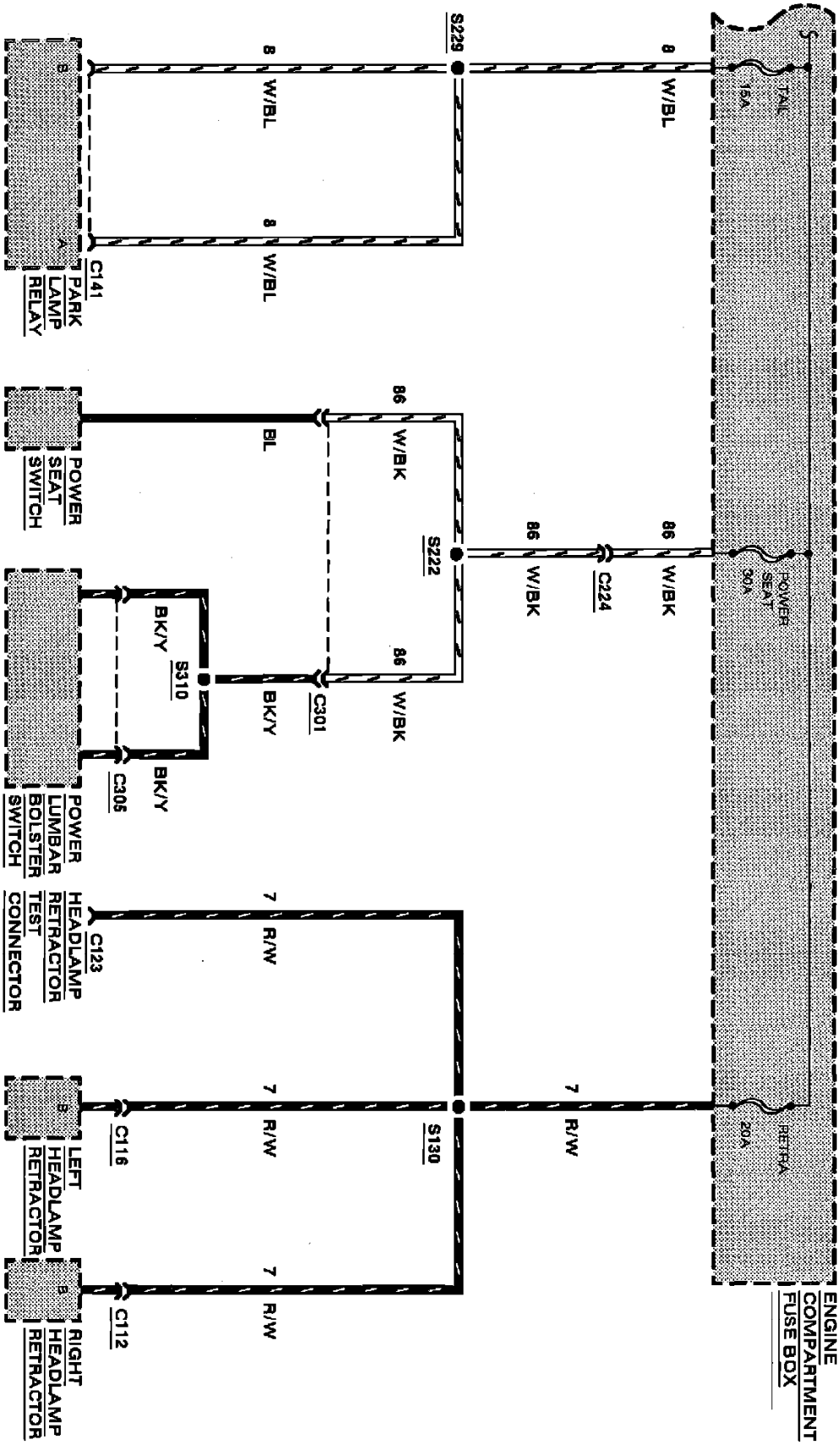

Power Distribution

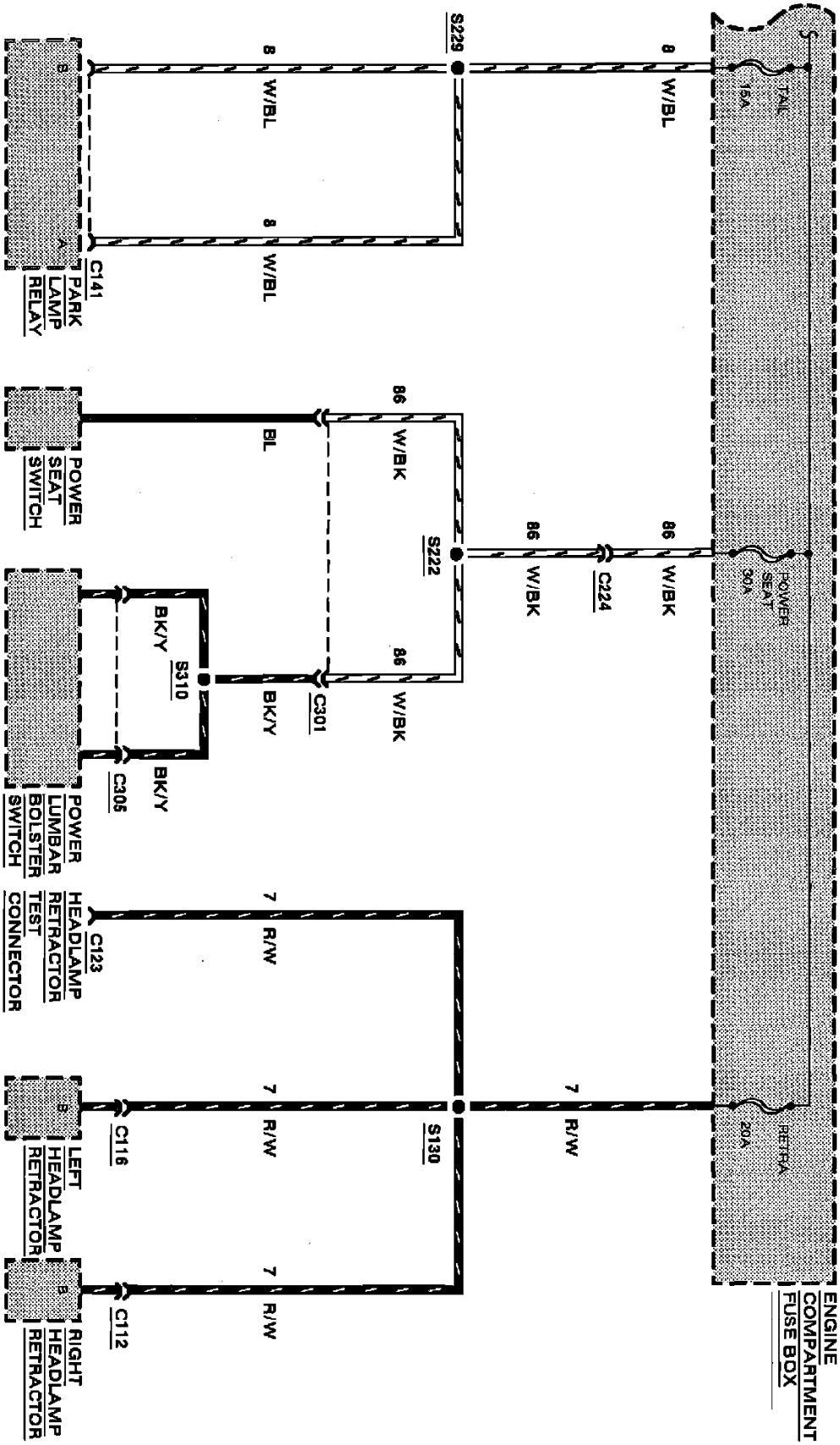

Power Distribution

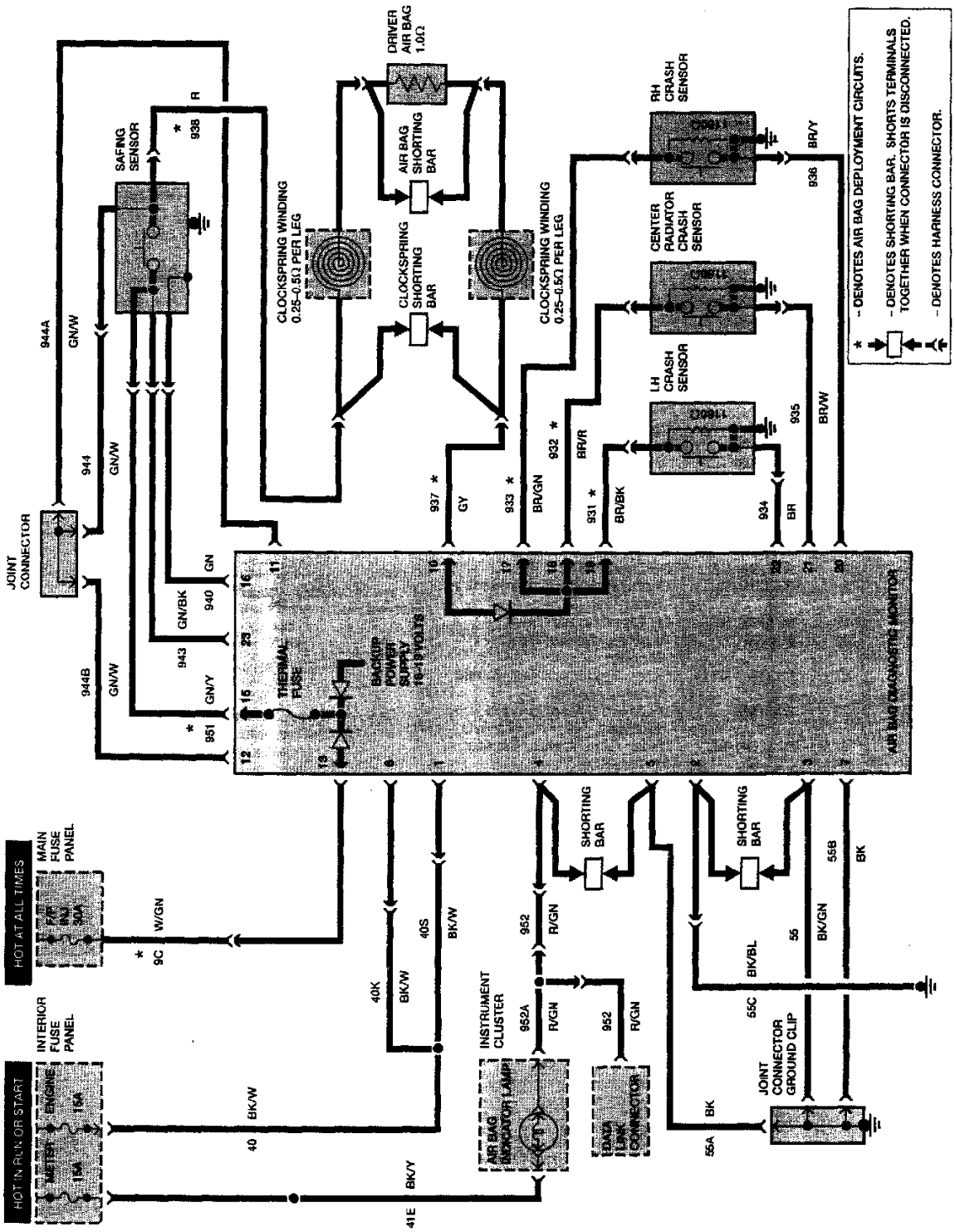

Fig. 25 Airbag System Wiring Circuit

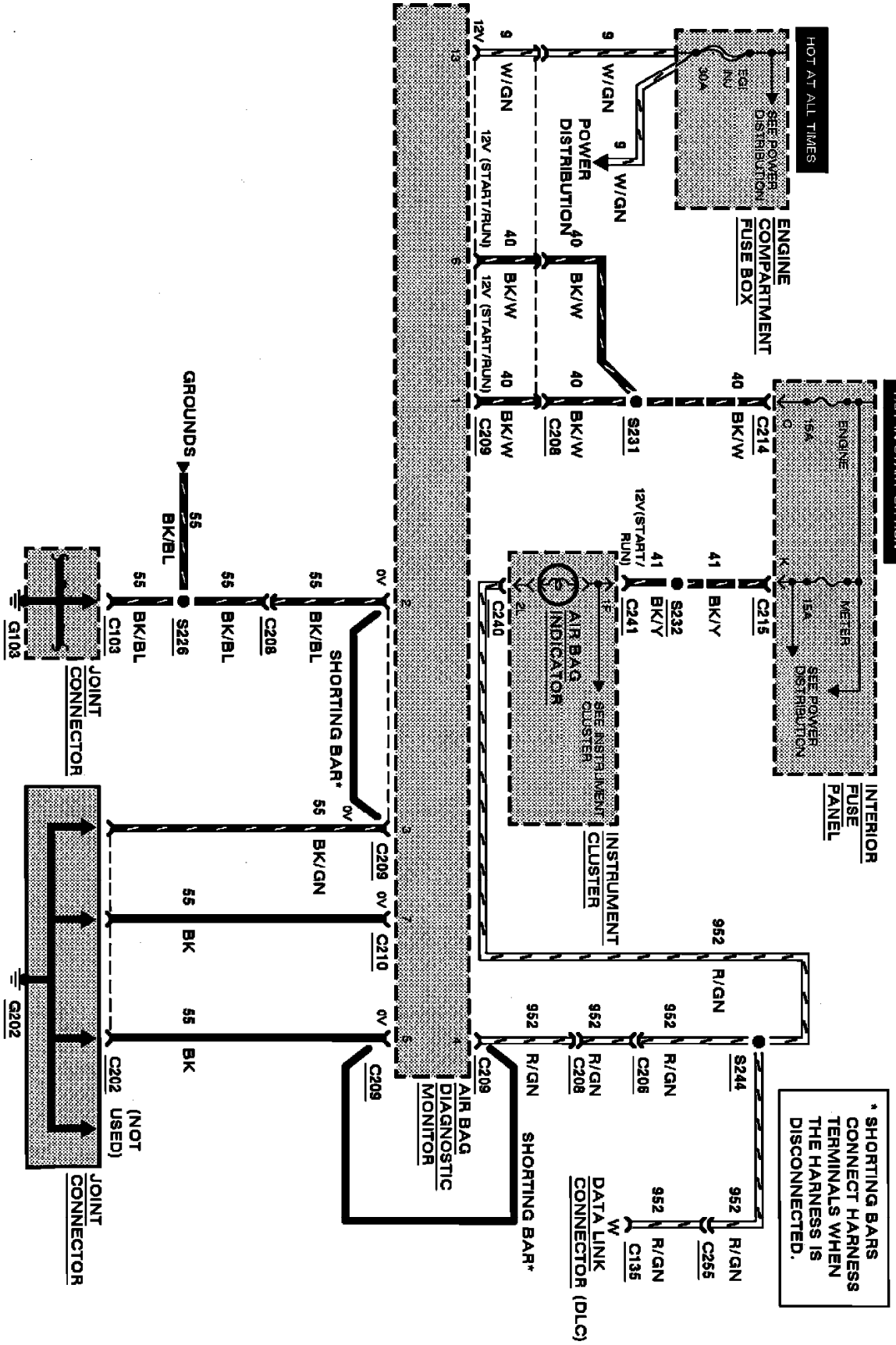

Air Bag Restraint System

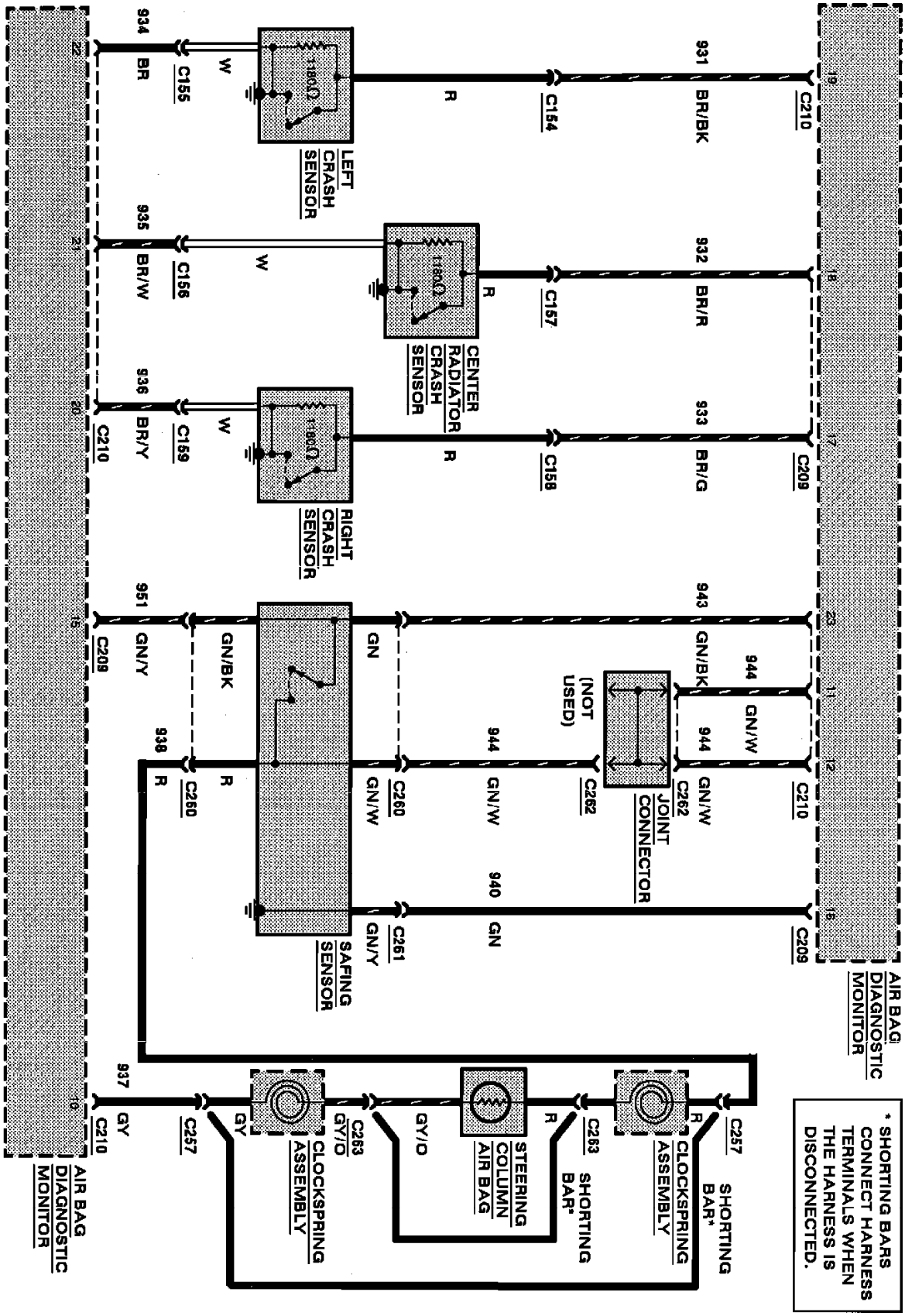

Air Bag Restraint System

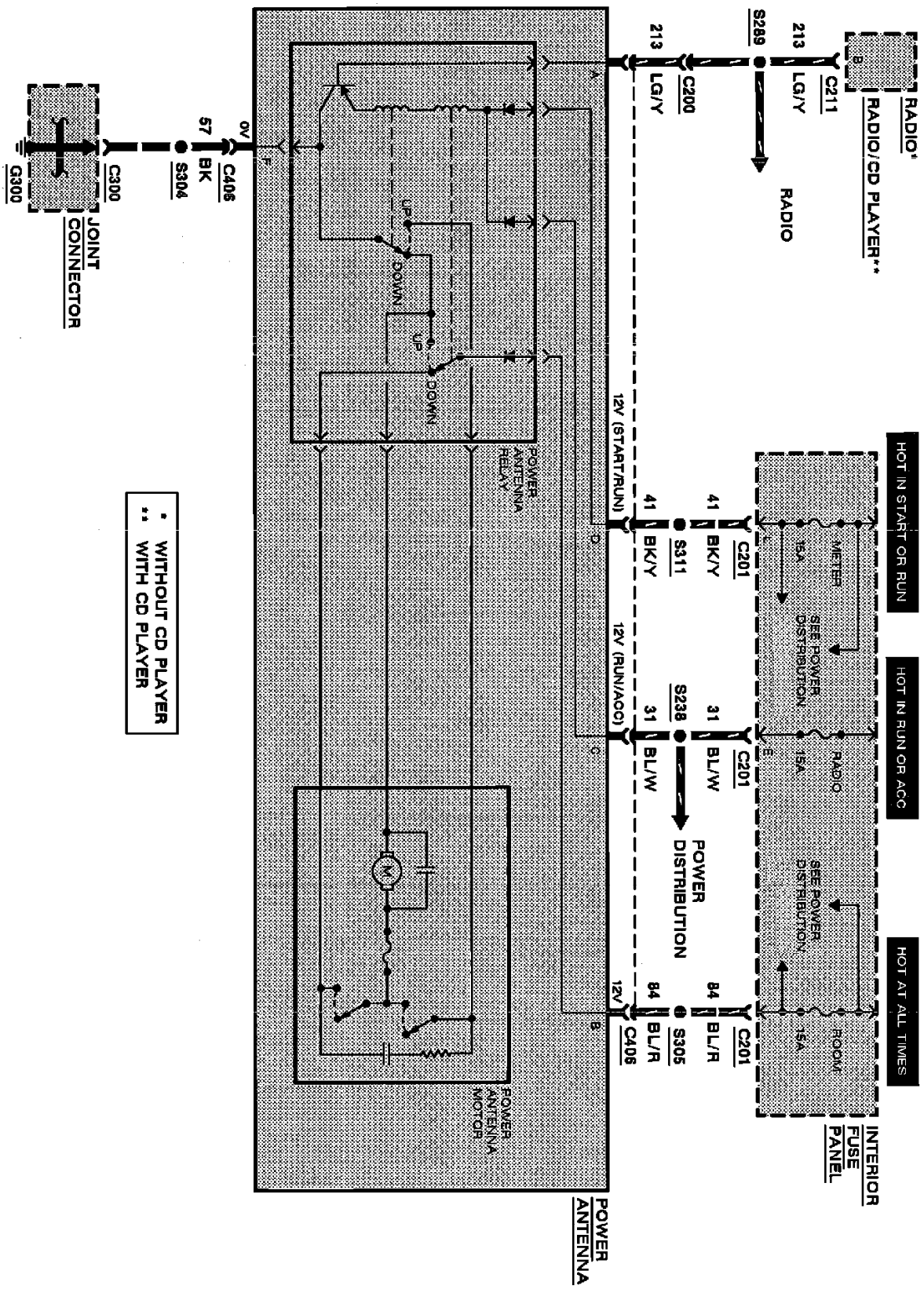

Radio (Power Antenna)

1993 Ford Probe L4-121 2.0L DOHC VIN A MFI

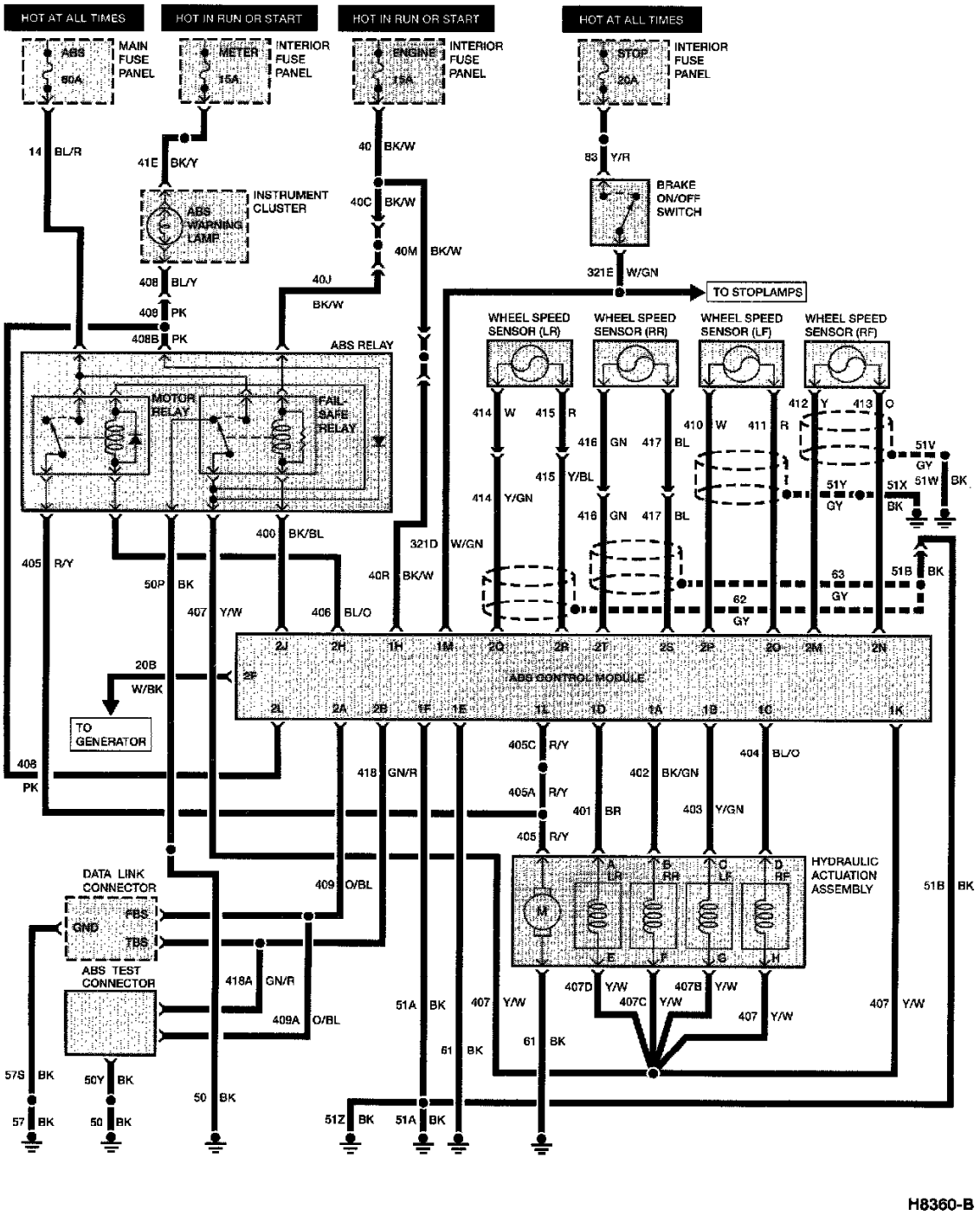

Schematic - AntiLock Brake System

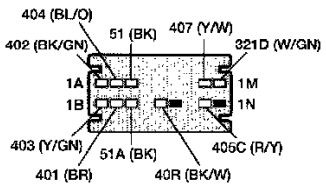

ABS CONTROL MODULE

PIN	CIRCUIT	CIRCUIT FUNCTION
1A	402 (BK/GN)	Right Rear Solenoid
1B	403 (Y/GN)	Left Front Solenoid
1C	404 (BL/O)	Right Front Solenoid
1D	401 (BR)	Left Rear Solenoid
1E	51 (BK)	Module Ground
1F	51A (BK)	Module Ground
1H	40R (BK/W)	Module Power
1J	—	NOT USED
1K	407 (Y/W)	Solenoid Monitor
1L	405C (R/Y)	Motor Monitor
1M	321D (W/GN)	Brake On/Off Switch Input
1N	—	NOT USED

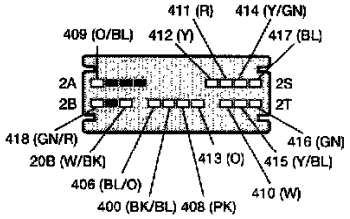

ABS CONTROL MODULE

PIN	CIRCUIT	CIRCUIT FUNCTION
2A	409 (O/BL)	ABS Test Connector and Data Link Connector
2B	418 (GN/R)	ABS Test Connector and Data Link Connector
2C	—	NOT USED
2D	—	NOT USED
2E	—	NOT USED
2F	20B (W/BK)	Generator Voltage
2G	—	NOT USED
2H	406 (BL/O)	ABS Relay (Motor Relay)
2J	400 (BK/BL)	ABS Relay (Fail-Safe Relay)
2L	408 (PK)	ABS Relay and ABS Warning Lamp
2M	412 (Y)	Wheel Speed Sensor (RF)
2N	413 (O)	Wheel Speed Sensor (RF)
2O	411 (R)	Wheel Speed Sensor (LF)
2P	410 (W)	Wheel Speed Sensor (LF)
2Q	414 (Y/GN)	Wheel Speed Sensor (LR)
2R	415 (Y/BL)	Wheel Speed Sensor (LR)
2S	417 (BL)	Wheel Speed Sensor (RR)
2T	416 (GN)	Wheel Speed Sensor (RR)

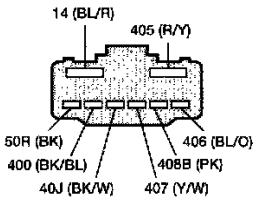

ABS RELAY

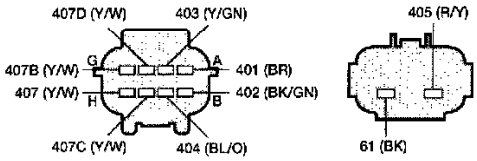

HYDRAULIC ACTUATION ASSEMBLY

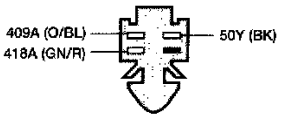

ABS TEST CONNECTOR

WHEEL SPEED SENSOR (LF)

WHEEL SPEED SENSOR (RF)

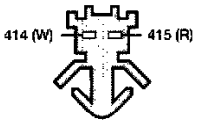

WHEEL SPEED SENSOR (LR)

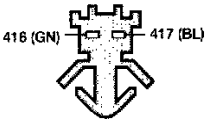

WHEEL SPEED SENSOR (RR)

H8361-B

Connector Views - AntiLock Brake System

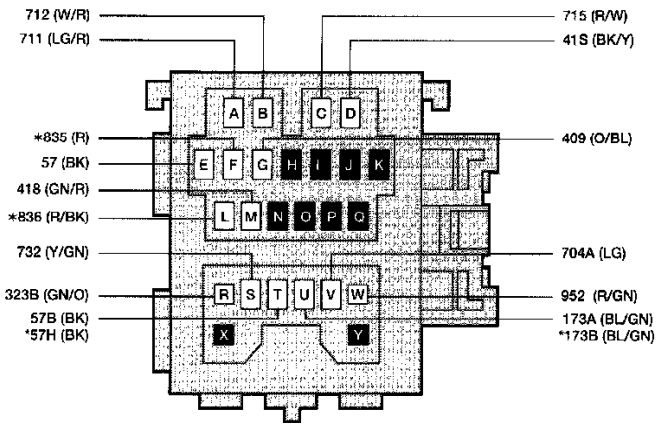

DATA LINK CONNECTOR (DLC)

*2.5L ONLY

*2.5L 4EAT ONLY

PIN	CIRCUIT	CIRCUIT FUNCTION
A	711 (LG/R)	(FEN) PCM Self-Test Output
B	712 (W/R)	(MEN) Switch Monitor Lamp
C	715 (R/W)	(TEN) PCM Self-Test Input
D	41S (BK/Y)	(+B) Battery Voltage
E	57 (BK)	(GND) Ground
F	*835 (R)	(FAT) TCM Self-Test Output
G	409 (O/BL)	(FBS) Anti-Lock Brakes Self-Test Output
H	—	NOT USED
I	—	NOT USED
J	—	NOT USED
K	—	NOT USED
L	*836 (R/BK)	(TAT) TCM Self-Test Input
M	418 (GN/R)	(TBS) Anti-Lock Brakes Self-Test Input

PIN	CIRCUIT	CIRCUIT FUNCTION
N	—	NOT USED
O	—	NOT USED
P	—	NOT USED
Q	—	NOT USED
R	323B (GN/O)	(FAB) Horn Relay
S	732 (Y/GN)	(IG-) Tachometer Signal
T	57B (BK)	(GND) Ground
	*57H (BK)	(GND) Ground
U	173A (BL/GN)	(TFA) High Cooling Fan Relay
	*173B (BL/GN)	(TFA) High Cooling Fan Relay
V	704A (LG)	(F/P) Fuel Pump Relay
W	952 (R/GN)	(TAB) Air Bag Diagnostic Monitor Output
X	—	NOT USED
Y	—	NOT USED

H8519-A

Connector Views - AntiLock Brake System

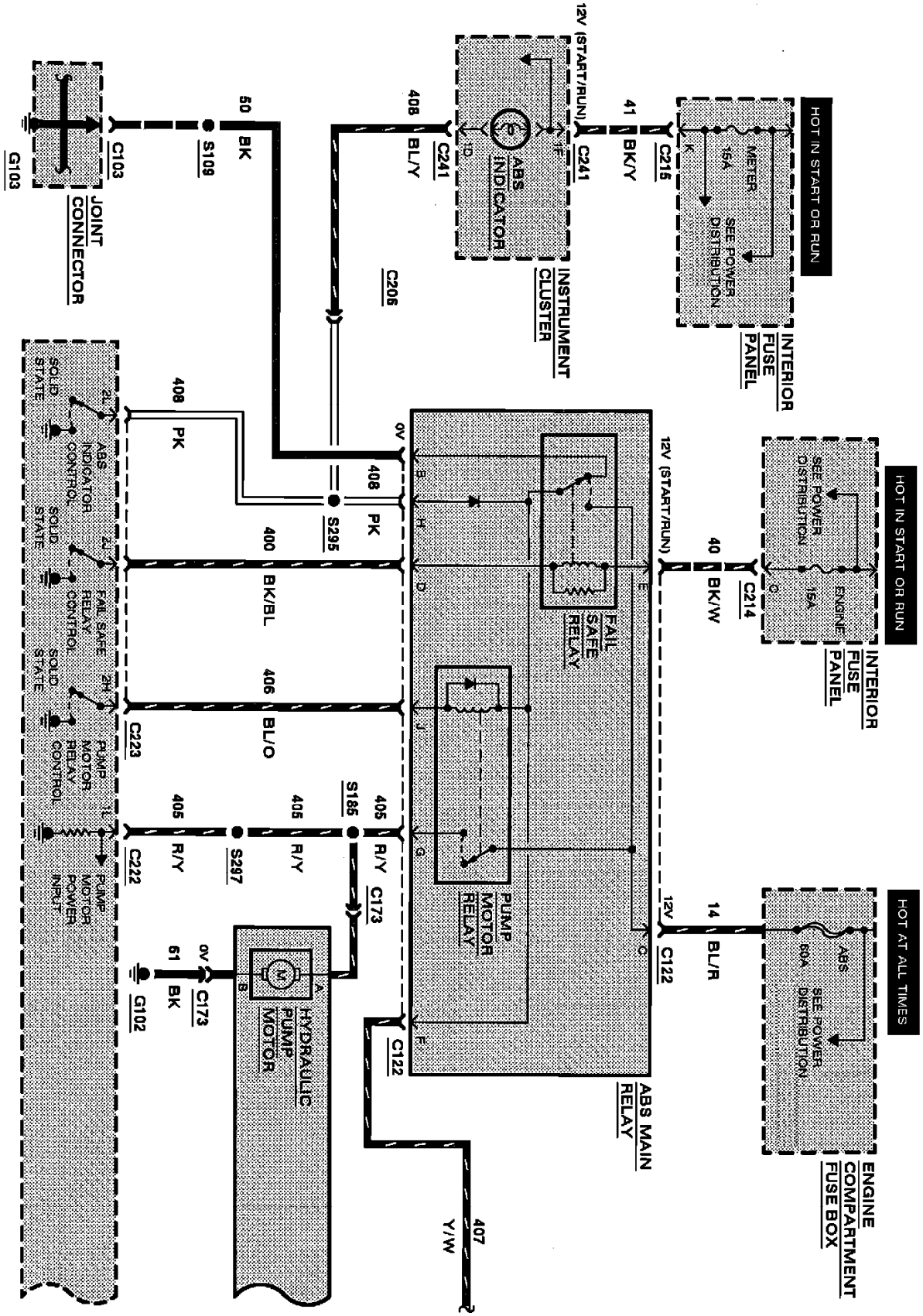

Anti-Lock Brake System

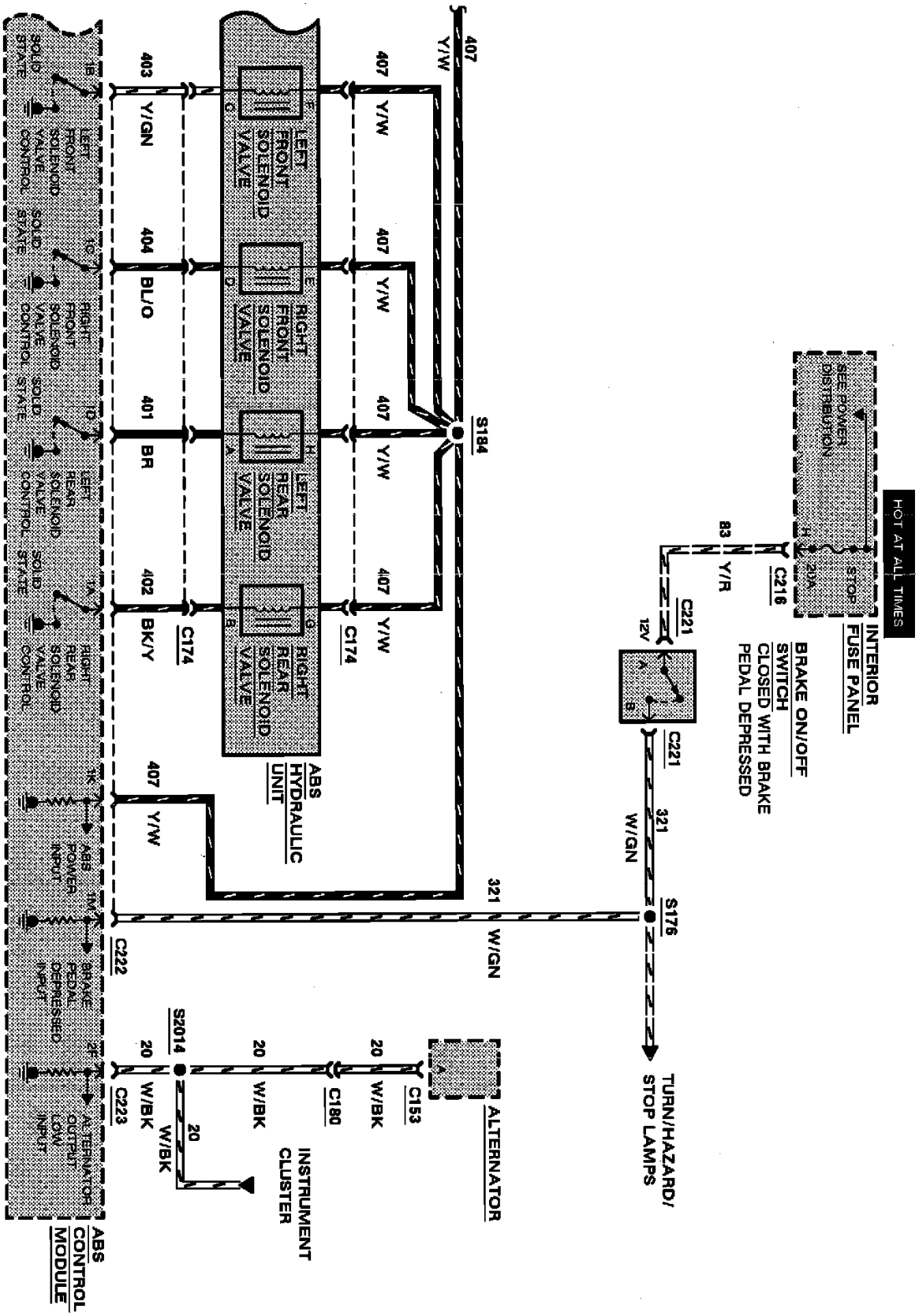

Anti-Lock Brake System

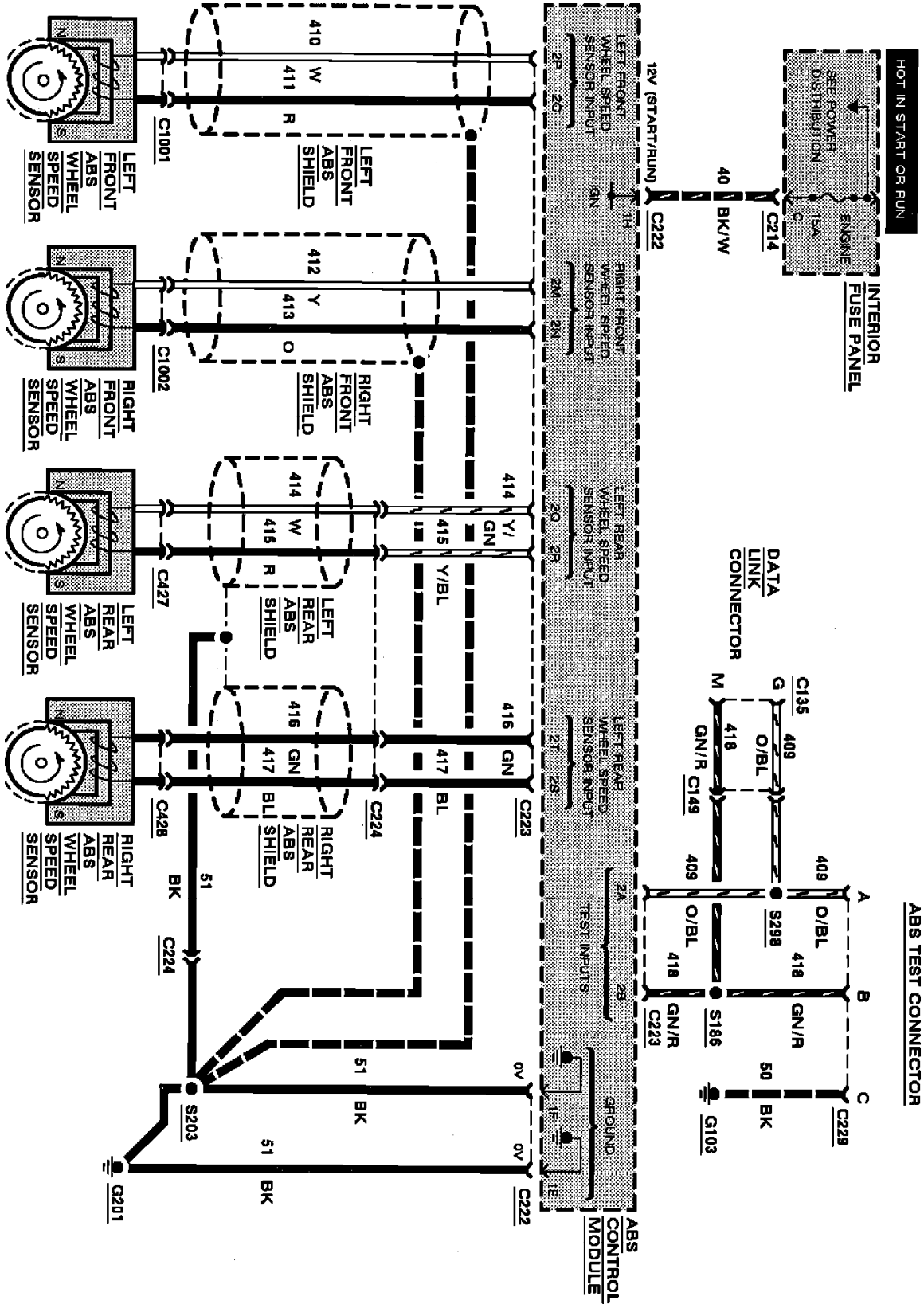

Anti-Lock Brake System

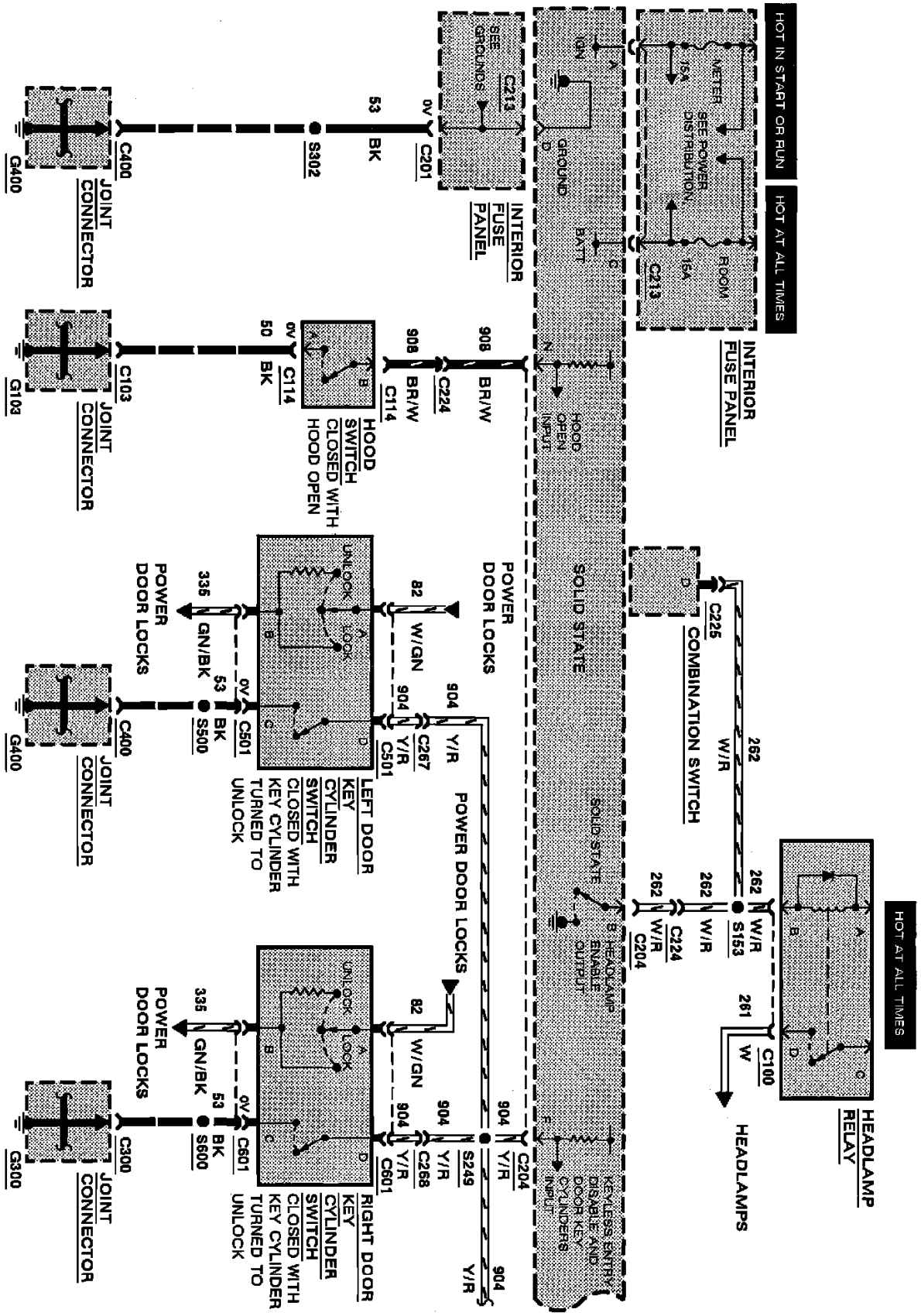
HOT IN START OR RUN
HOT AT ALL TIMES
METER
SEE POWER DISTRIBUTION
15A
ROOM
16A
C213
INTERIOR FUSE PANEL
IGN
GROUND
BATT
HOOD OPEN INPUT
SOLID STATE
C213
SEE GROUNDS
INTERIOR FUSE PANEL
0V
C201
53
BK
S302
C400
JOINT CONNECTOR
G400
908
BR/W
C224
C114
HOOD SWITCH CLOSED WITH HOOD OPEN
C103
G103
C225
COMBINATION SWITCH
262
W/R
S153
C224
W/R
C204
HEADLAMP ENABLE OUTPUT
C100
261
W
HEADLAMPS
HEADLAMP RELAY
KEYLESS ENTRY DISABLE AND DOOR KEY CYLINDER INPUT
POWER DOOR LOCKS
82
W/GN
904
Y/R
C267
C501
LEFT DOOR KEY CYLINDER SWITCH CLOSED WITH KEY CYLINDER TURNED TO UNLOCK
UNLOCK
LOCK
335
GN/BK
S500
C501
C400
G400
S249
C268
C601
RIGHT DOOR KEY CYLINDER SWITCH CLOSED WITH KEY CYLINDER TURNED TO UNLOCK
S600
C300
G300

Anti-Theft

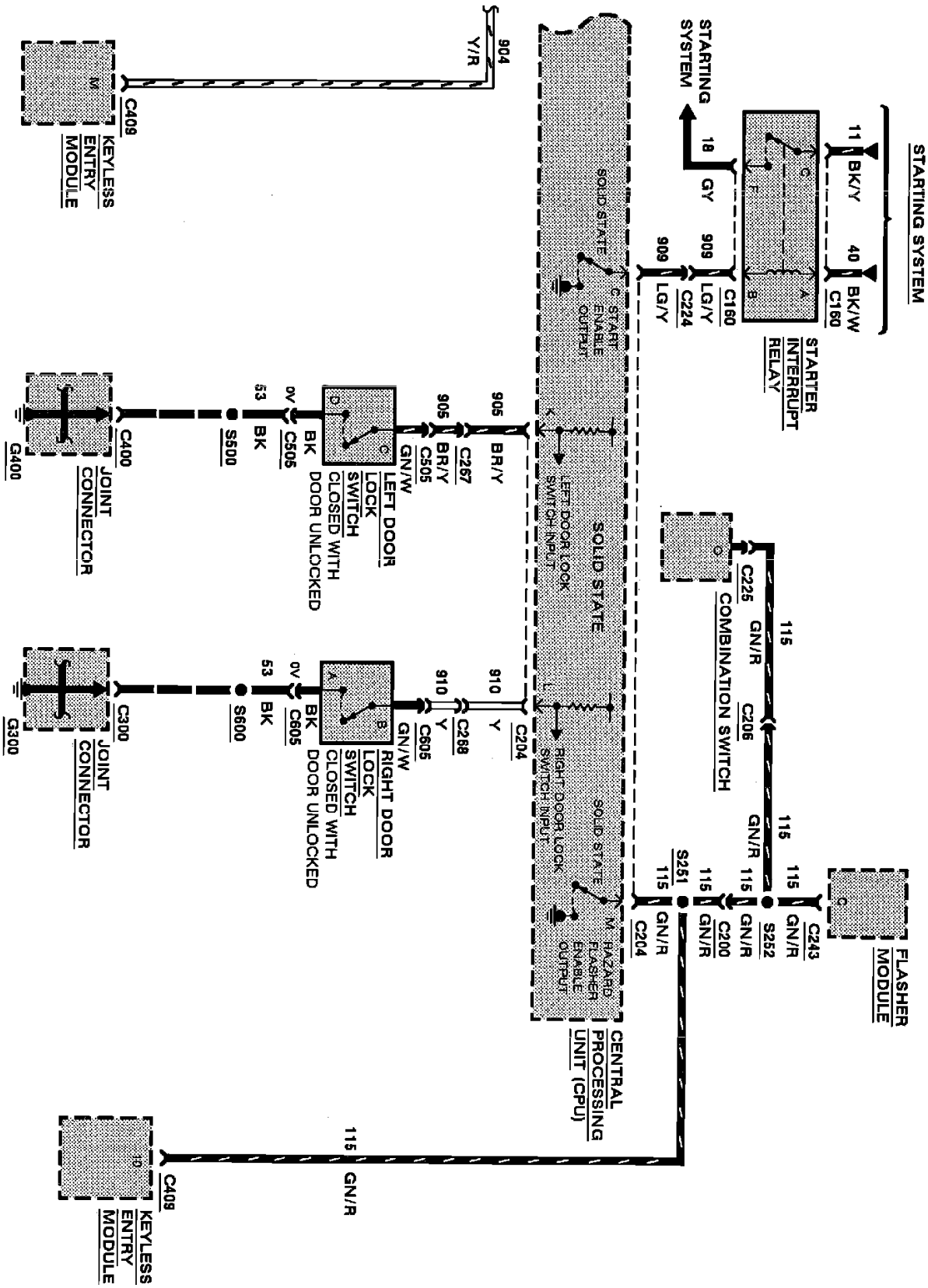
STARTING SYSTEM
11
BK/Y
40
BK/W
C160
STARTER INTERRUPT RELAY
STARTING SYSTEM
18
GY
909
LG/Y
C224
LG/Y
C160
SOLID STATE
START ENABLE OUTPUT
904
Y/R
C409
KEYLESS ENTRY MODULE
905
BR/Y
C267
BR/Y
C505
GN/W
LEFT DOOR LOCK SWITCH
CLOSED WITH DOOR UNLOCKED
BK
C505
0V
53
BK
S500
C400
JOINT CONNECTOR
G400
LEFT DOOR LOCK SWITCH INPUT
910
Y
C204
910
Y
C269
C605
GN/W
RIGHT DOOR LOCK SWITCH
CLOSED WITH DOOR UNLOCKED
BK
C605
0V
53
BK
S600
C300
JOINT CONNECTOR
G300
RIGHT DOOR LOCK SWITCH INPUT
C225
GN/R
C206
COMBINATION SWITCH
115
GN/R
115
GN/R
S252
115
GN/R
C200
GN/R
115
S251
115
GN/R
C204
C243
GN/R
FLASHER MODULE
HAZARD FLASHER ENABLE OUTPUT
CENTRAL PROCESSING UNIT (CPU)
115
GN/R
C409
KEYLESS ENTRY MODULE

Anti-Theft

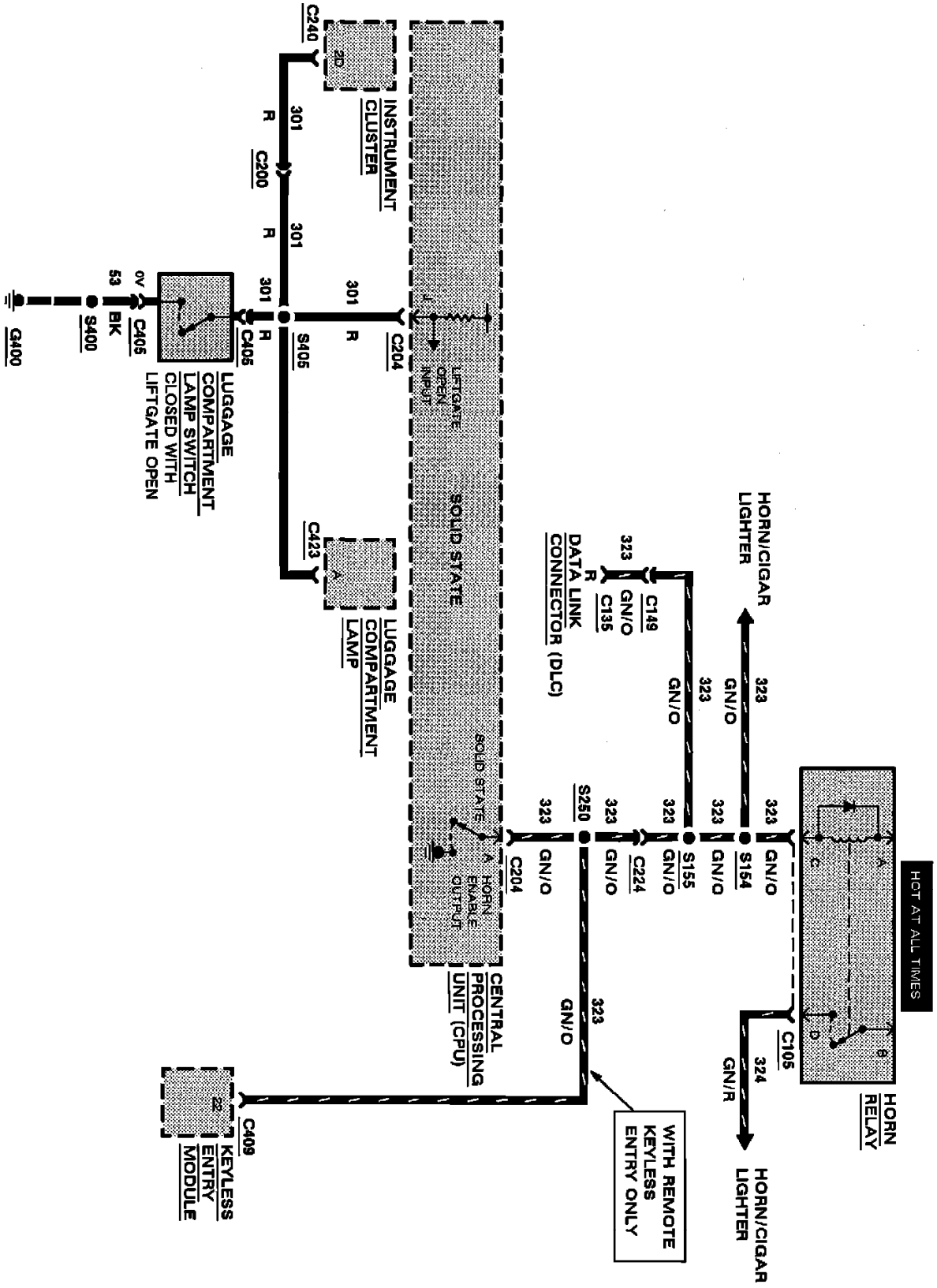
HOT AT ALL TIMES
HORN RELAY
C105
324
GN/R
HORN/CIGAR LIGHTER
323
GN/O
S154
S155
C224
S250
C149
C135
DATA LINK CONNECTOR (DLC)
WITH REMOTE KEYLESS ENTRY ONLY
C204
CENTRAL PROCESSING UNIT (CPU)
SOLID STATE
HORN ENABLE OUTPUT
C409
22
KEYLESS ENTRY MODULE
LIFTGATE OPEN INPUT
C423
LUGGAGE COMPARTMENT LAMP
S405
C240
20
INSTRUMENT CLUSTER
301
R
C200
C406
C405
0V
53
BK
S400
G400
LUGGAGE COMPARTMENT LAMP SWITCH
CLOSED WITH LIFTGATE OPEN

Anti-Theft

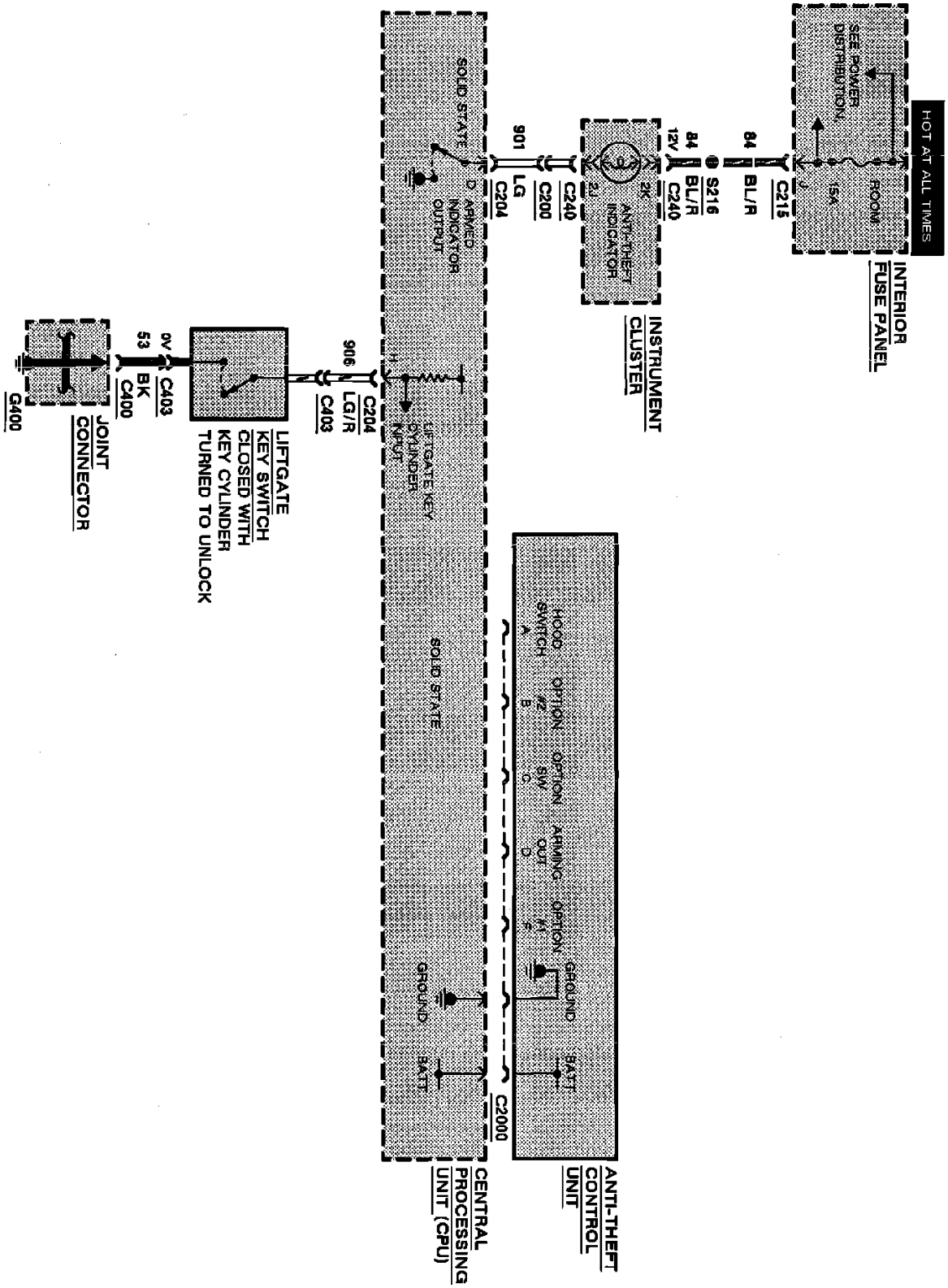
HOT AT ALL TIMES
SEE POWER DISTRIBUTION
ROOM
154
J
C215
84
BL/R
INTERIOR FUSE PANEL
S216
84
BL/R
12V
C240
2K
ANTI-THEFT INDICATOR
24
C240
INSTRUMENT CLUSTER
C200
901
LG
C204
D
SOLID STATE
ARMED INDICATOR OUTPUT
H
LIFTGATE KEY CYLINDER INPUT
906
C204
LG/R
C403
LIFTGATE KEY SWITCH CLOSED WITH KEY CYLINDER TURNED TO UNLOCK
0V
C403
53
BK
C400
JOINT CONNECTOR
G400
HOOD SWITCH
A
OPTION #2
B
OPTION SW
C
ARMING OUT
D
OPTION #1
E
GROUND
BATT
C2000
ANTI-THEFT CONTROL UNIT
SOLID STATE
GROUND
BATT
CENTRAL PROCESSING UNIT (CPU)

Anti-Theft

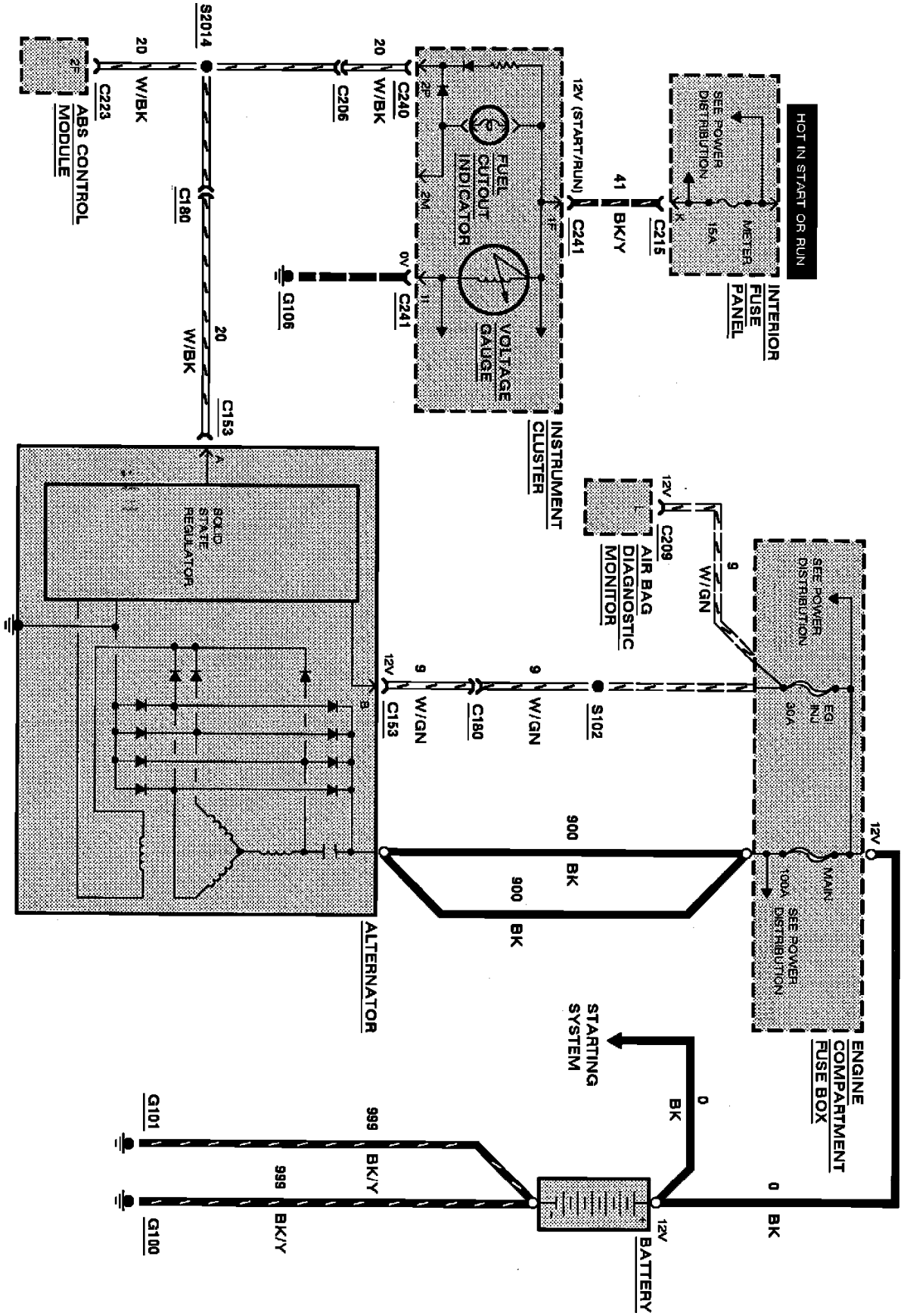

Charging System

Alternator

For Alternator wiring diagrams, please refer to: Starting and Charging/Charging System, See: Starting and Charging/Charging System/Diagrams

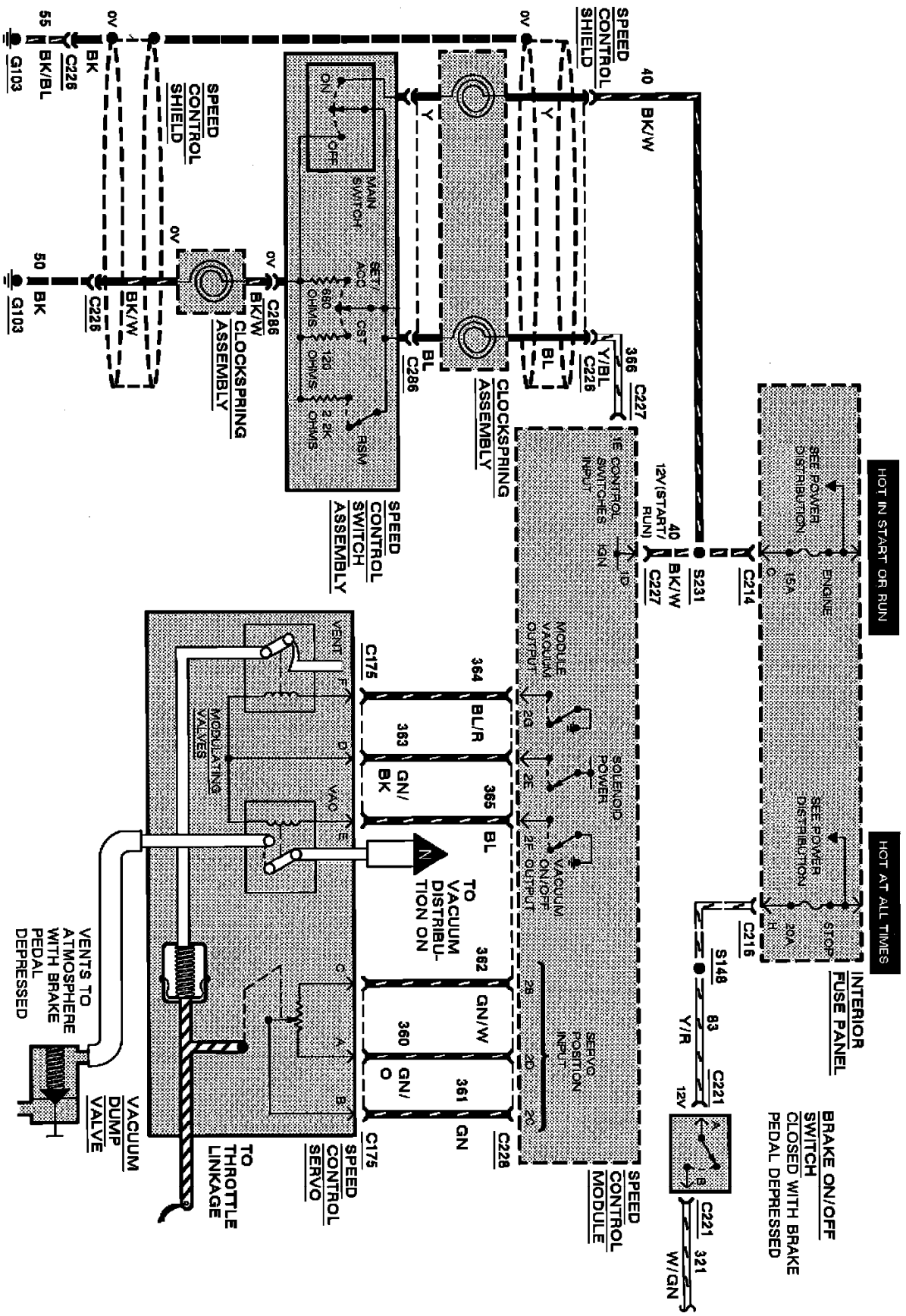

Speed Control

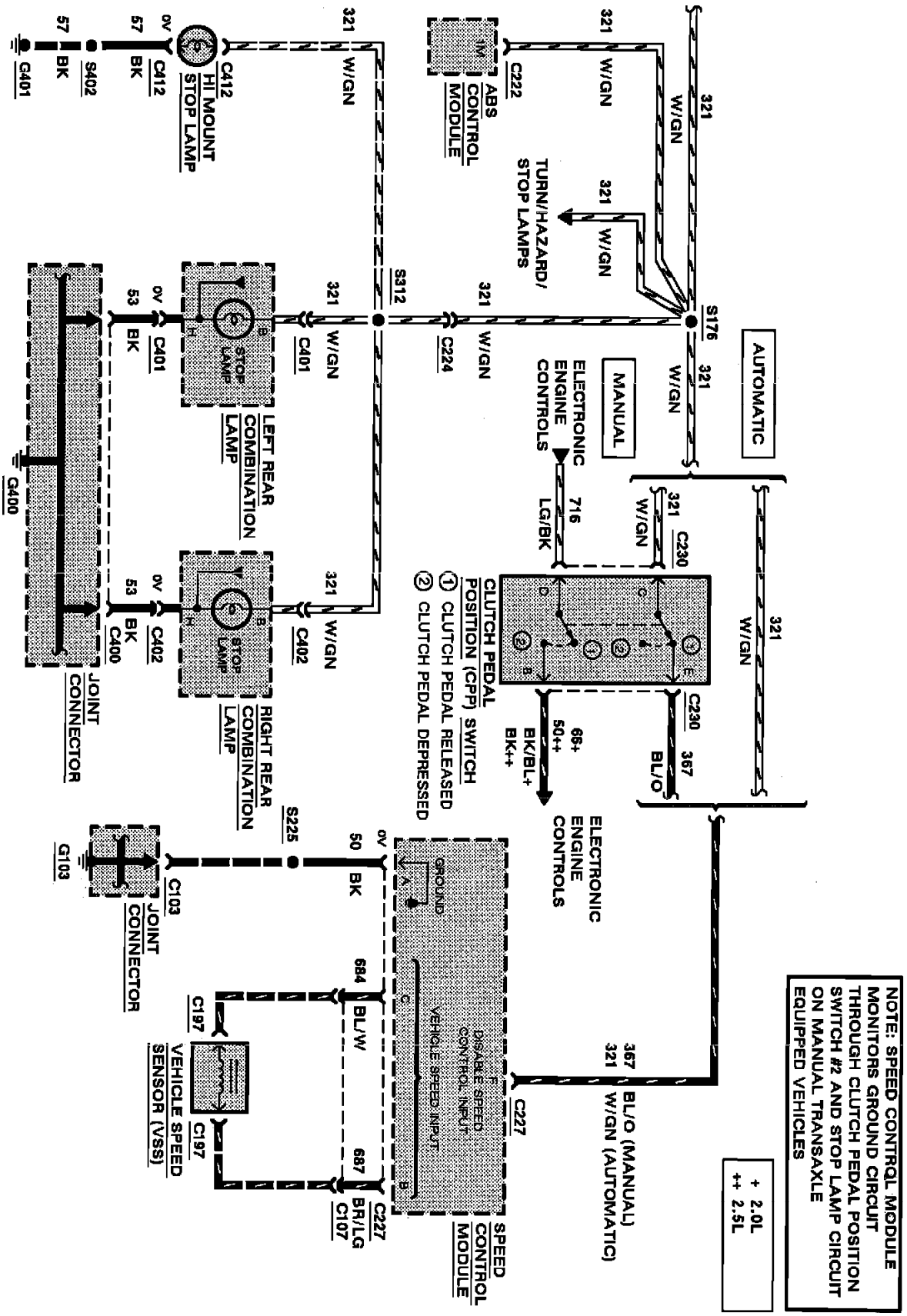

Speed Control

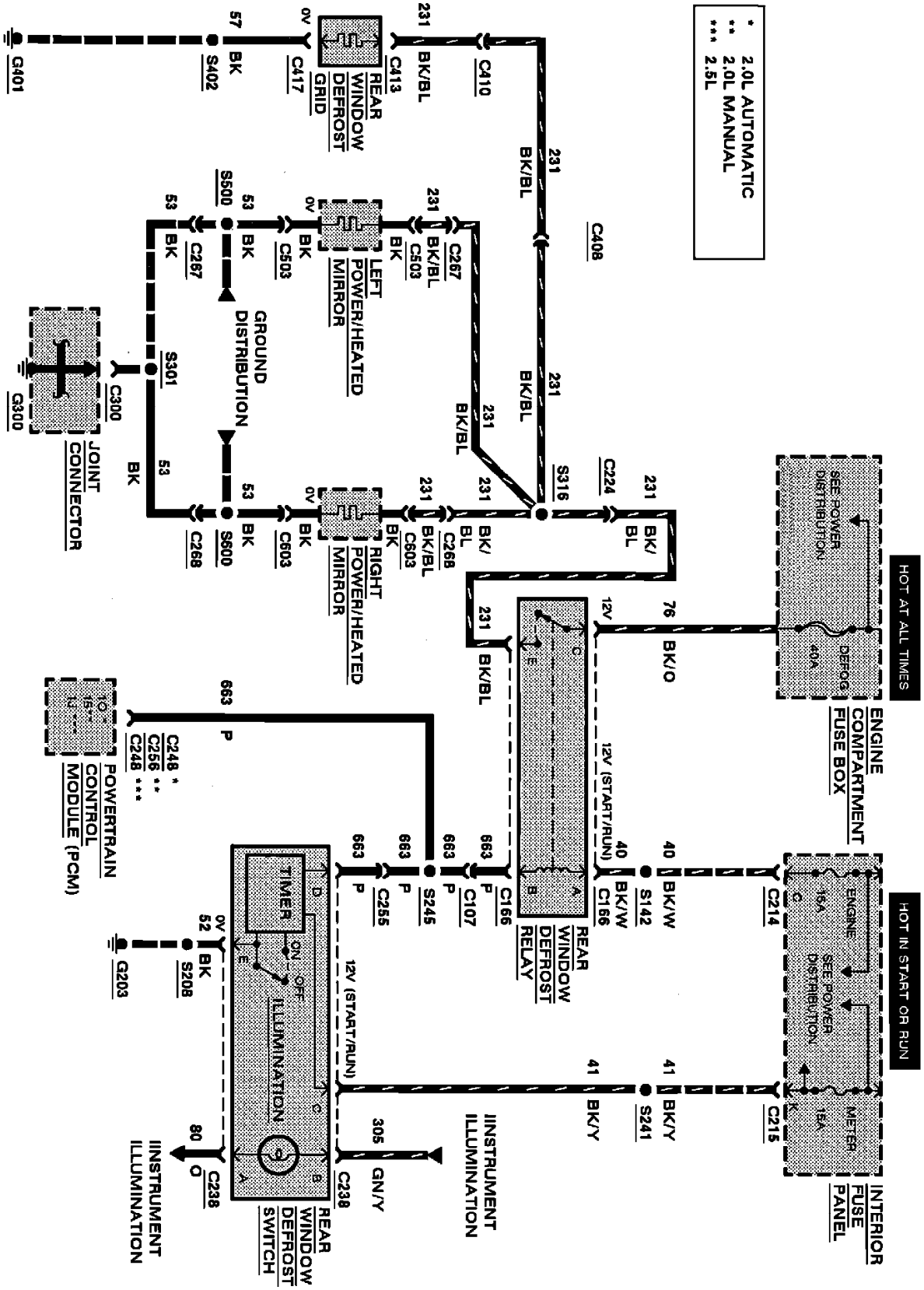

Rear Window Defrost/Heated Mirrors

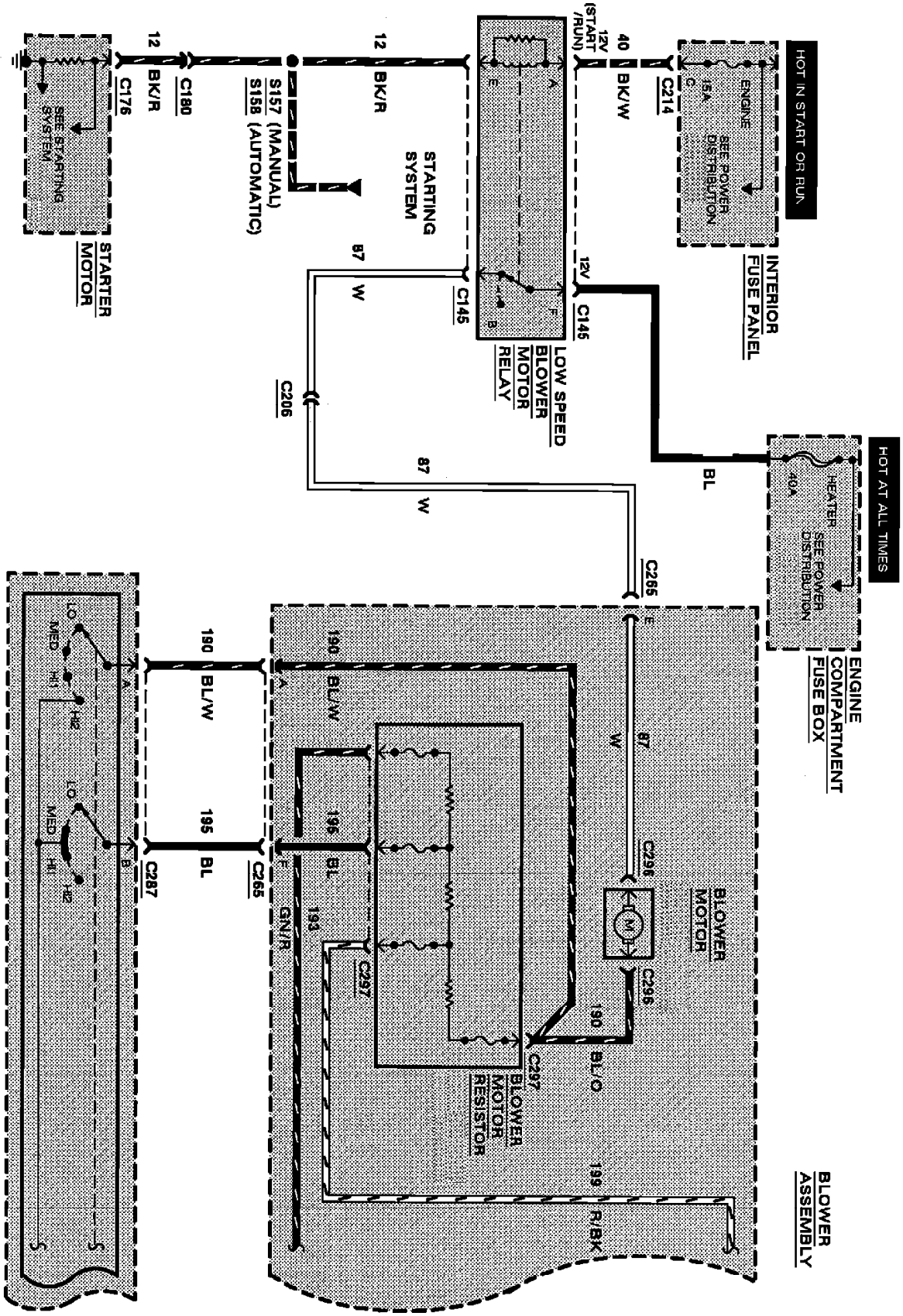
HOT IN START OR RUN
ENGINE
15A
SEE POWER DISTRIBUTION
C214
INTERIOR FUSE PANEL
40
BK/W
12V (START /RUN)
12V
C146
LOW SPEED BLOWER MOTOR RELAY
C145
STARTING SYSTEM
12
BK/R
S157 (MANUAL)
S158 (AUTOMATIC)
C180
12
BK/R
C176
SEE STARTING SYSTEM
STARTER MOTOR
87
W
C206
87
W
HOT AT ALL TIMES
HEATER
40A
SEE POWER DISTRIBUTION
BL
ENGINE COMPARTMENT FUSE BOX
C265
W
87
C296
BLOWER MOTOR
C296
190
BL/O
C297
BLOWER MOTOR RESISTOR
199
R/BK
BLOWER ASSEMBLY
190
BL/W
195
BL
193
GN/R
C297
190
BL/W
195
BL
C265
C287
LO
MED
HI1
HI2
LO
MED
HI1
HI2

Heater

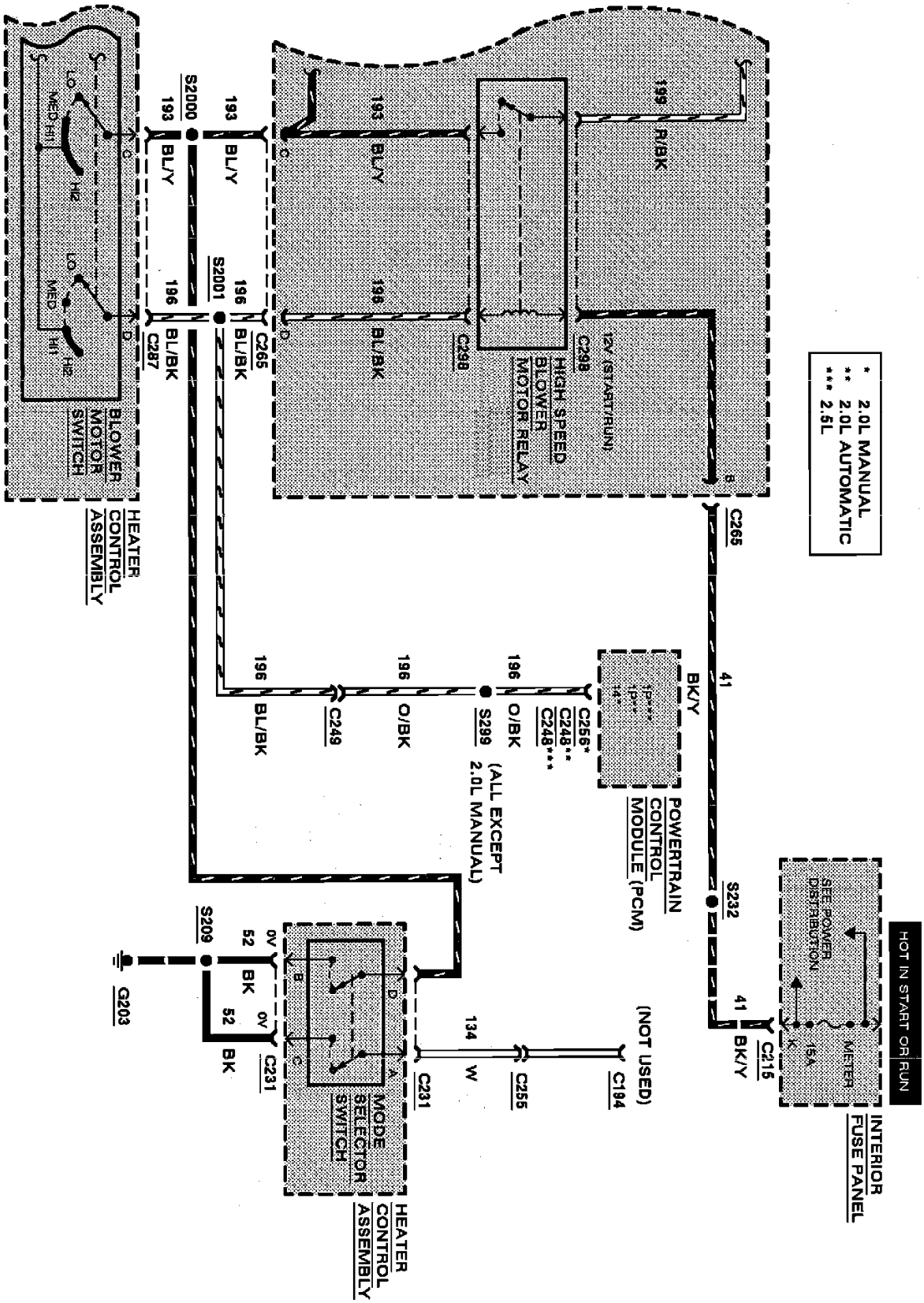
* 2.0L MANUAL
** 2.0L AUTOMATIC
*** 2.5L
HOT IN START OR RUN
INTERIOR FUSE PANEL
METER
SEE POWER DISTRIBUTION
15A
C215
BK/Y
41
S232
C265
B
12V (START/RUN)
C293
HIGH SPEED BLOWER MOTOR RELAY
R/BK
193
BL/Y
198
BL/BK
C298
POWERTRAIN CONTROL MODULE (PCM)
BK/Y
C256*
C248**
C248***
O/BK
196
S299
(ALL EXCEPT 2.0L MANUAL)
C249
O/BK
BL/BK
C265
S2001
S2000
C287
BLOWER MOTOR SWITCH
HEATER CONTROL ASSEMBLY
(NOT USED)
C194
C255
134
W
C231
MODE SELECTOR SWITCH
S209
BK
52
0V
C231
C203

Heater

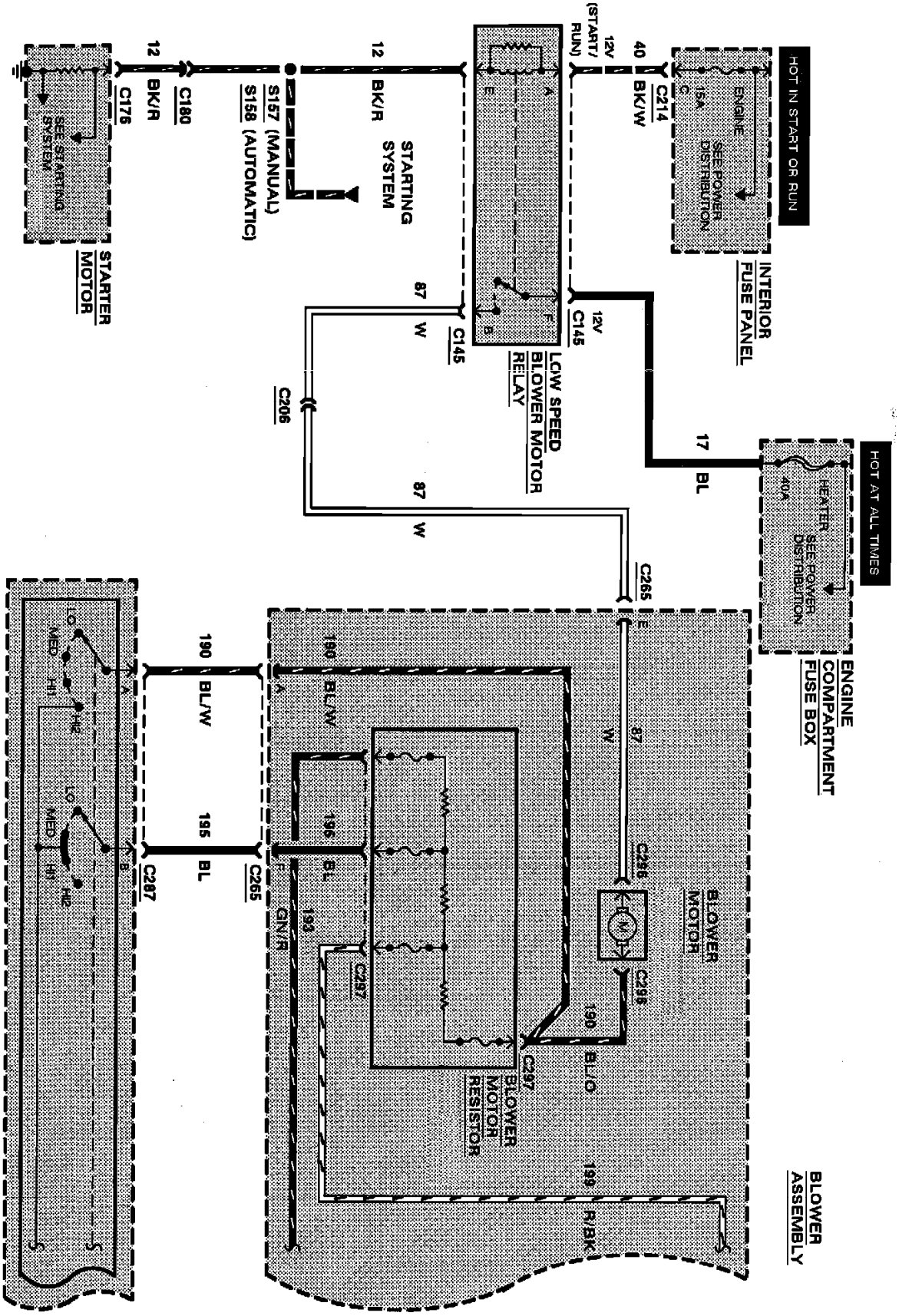

Air Conditioner/Heater

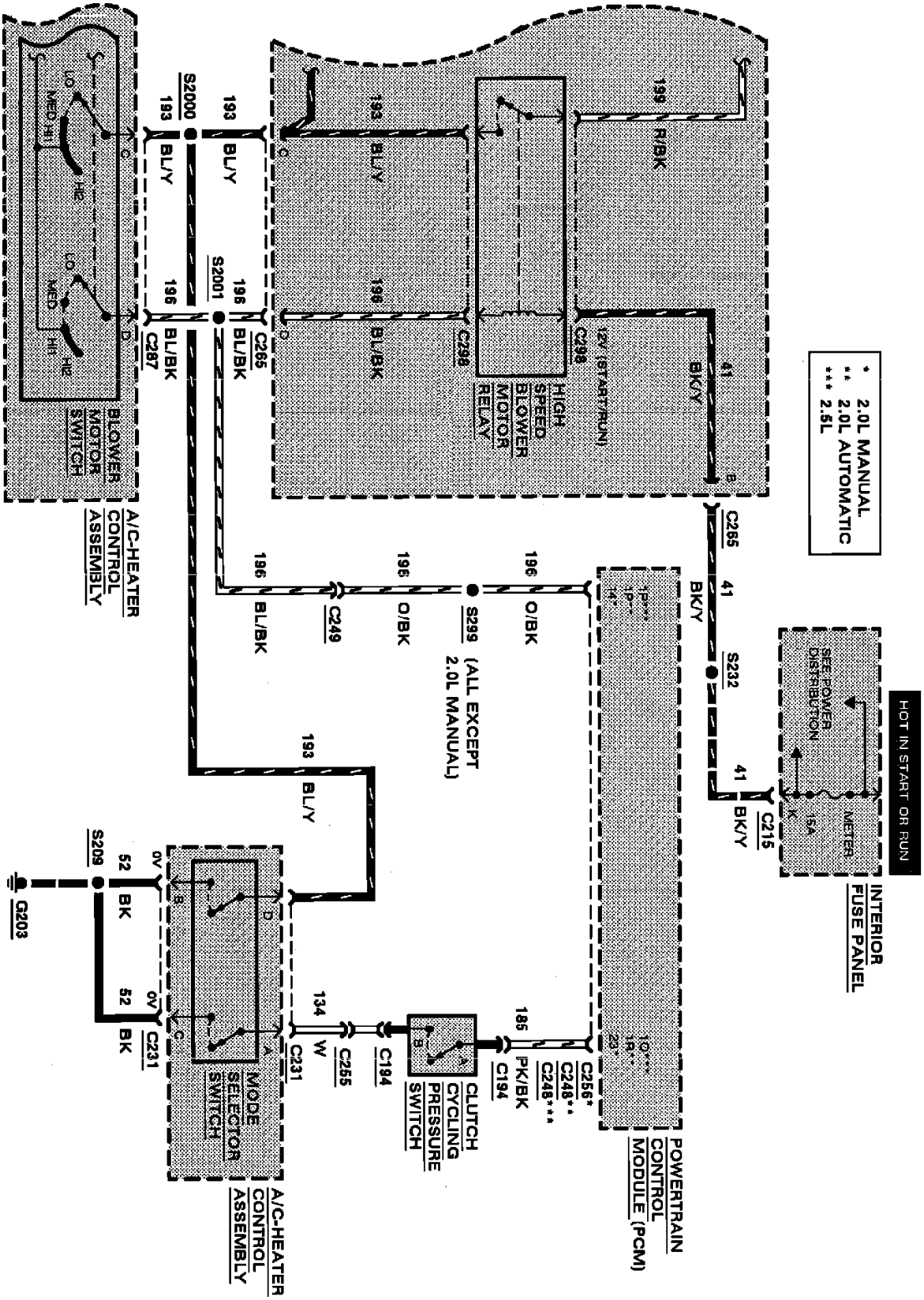

Air Conditioner/Heater

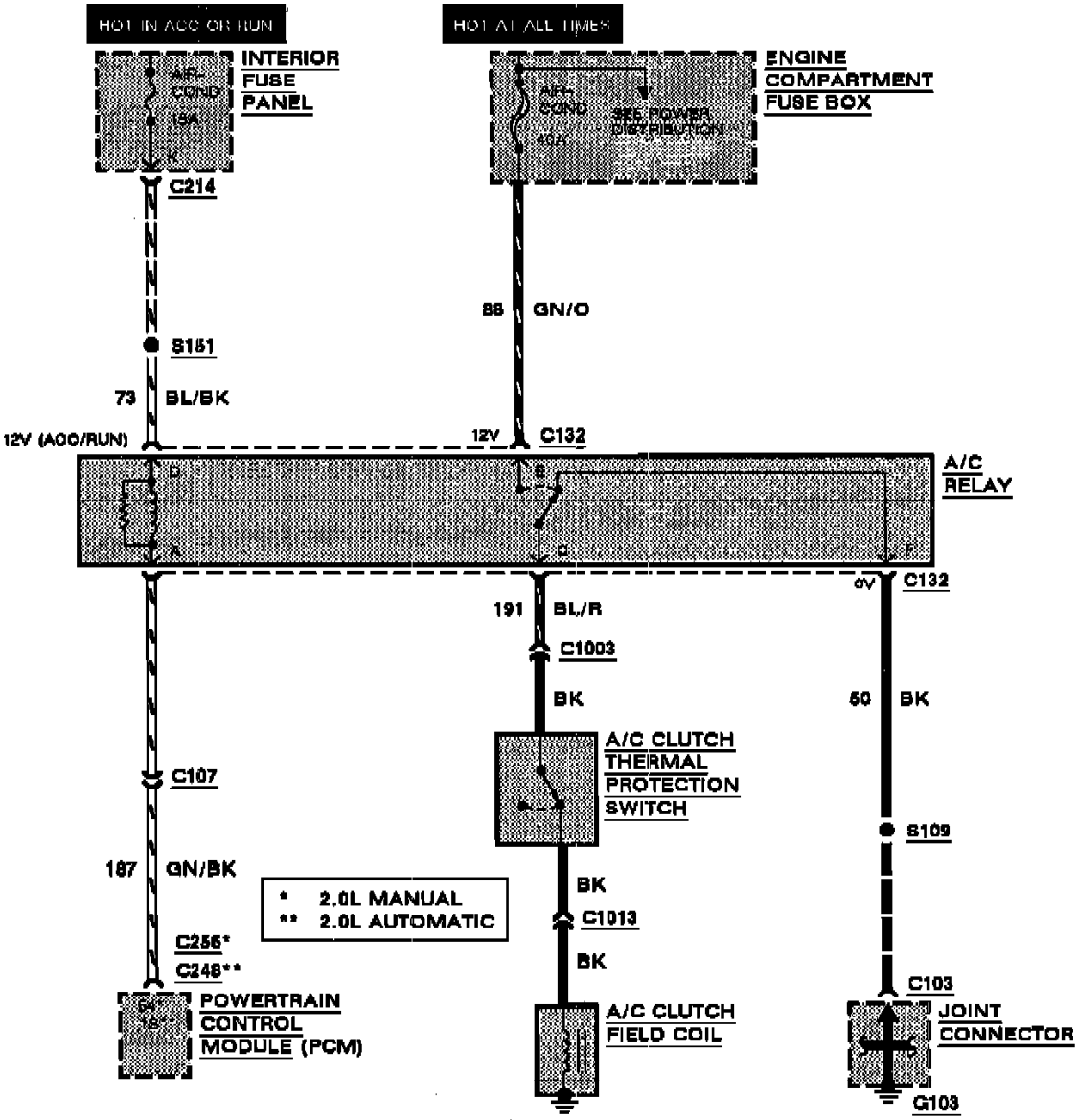

Air Conditioner/Heater

Compressor HVAC

For diagrams for the A/C Compressor, please refer to Heating and Air Conditioning Diagrams. See: Heating and Air Conditioning/Diagrams

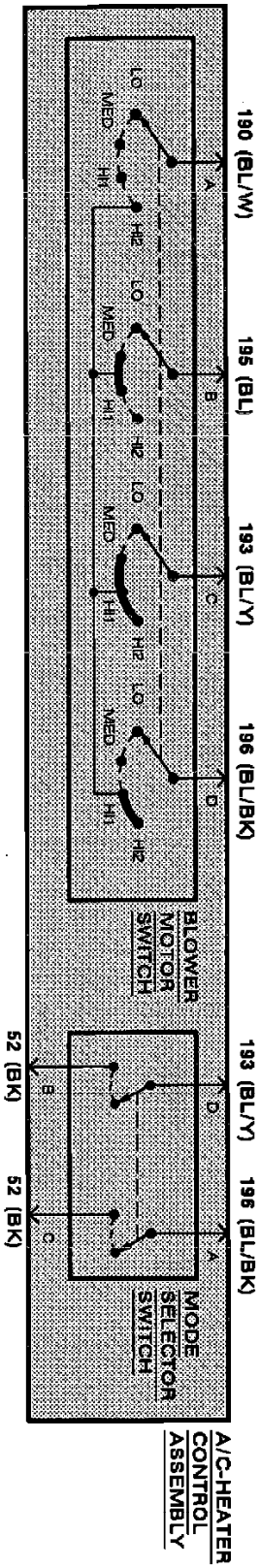
190 (BL/W)
195 (BL)
193 (BL/Y)
196 (BL/BK)
A
B
C
D
LO
MED
HI1
HI2
BLOWER MOTOR SWITCH
193 (BL/Y)
196 (BL/BK)
52 (BK)
52 (BK)
MODE SELECTOR SWITCH
A/C-HEATER CONTROL ASSEMBLY

Schematic

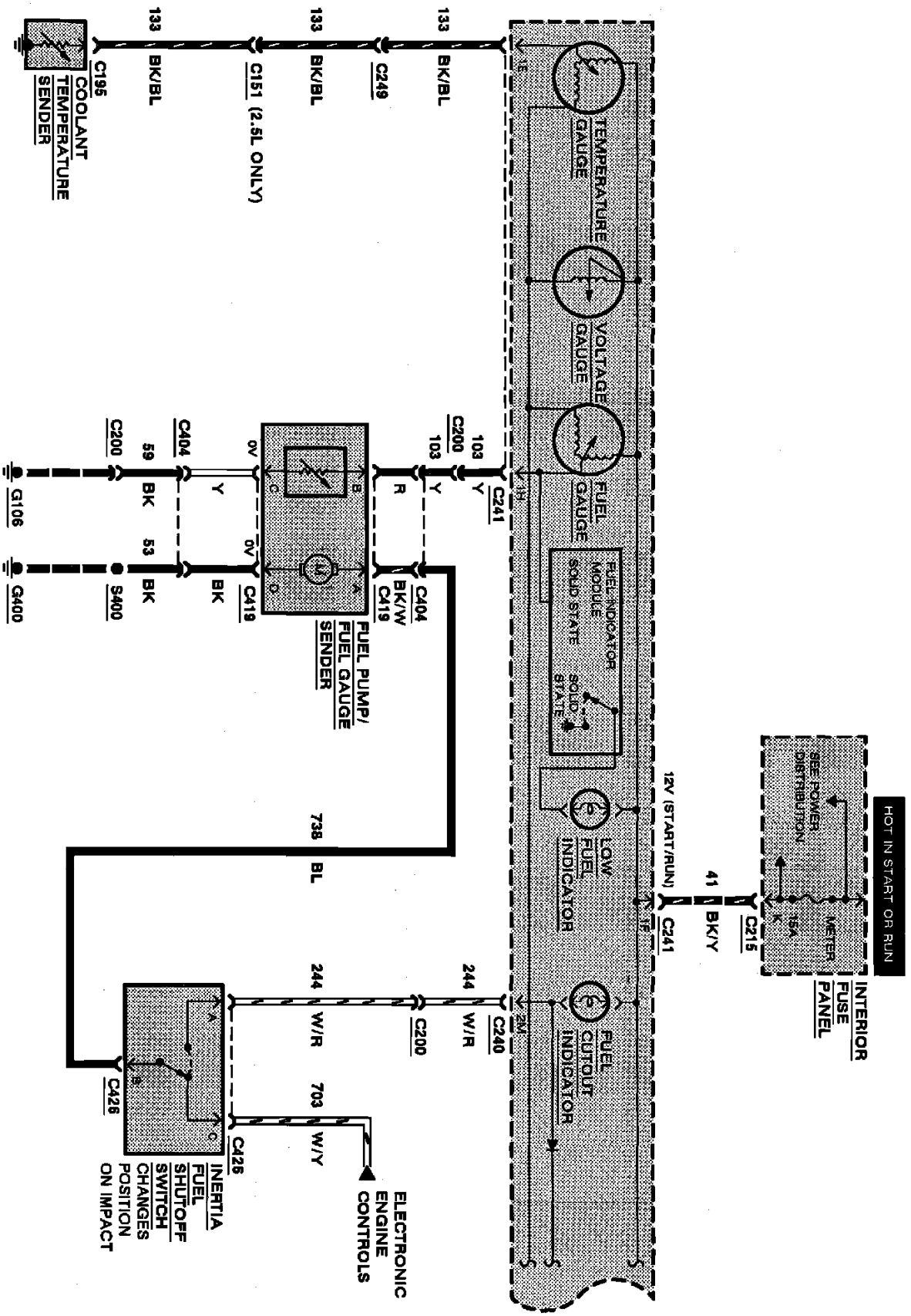

Instrument Cluster

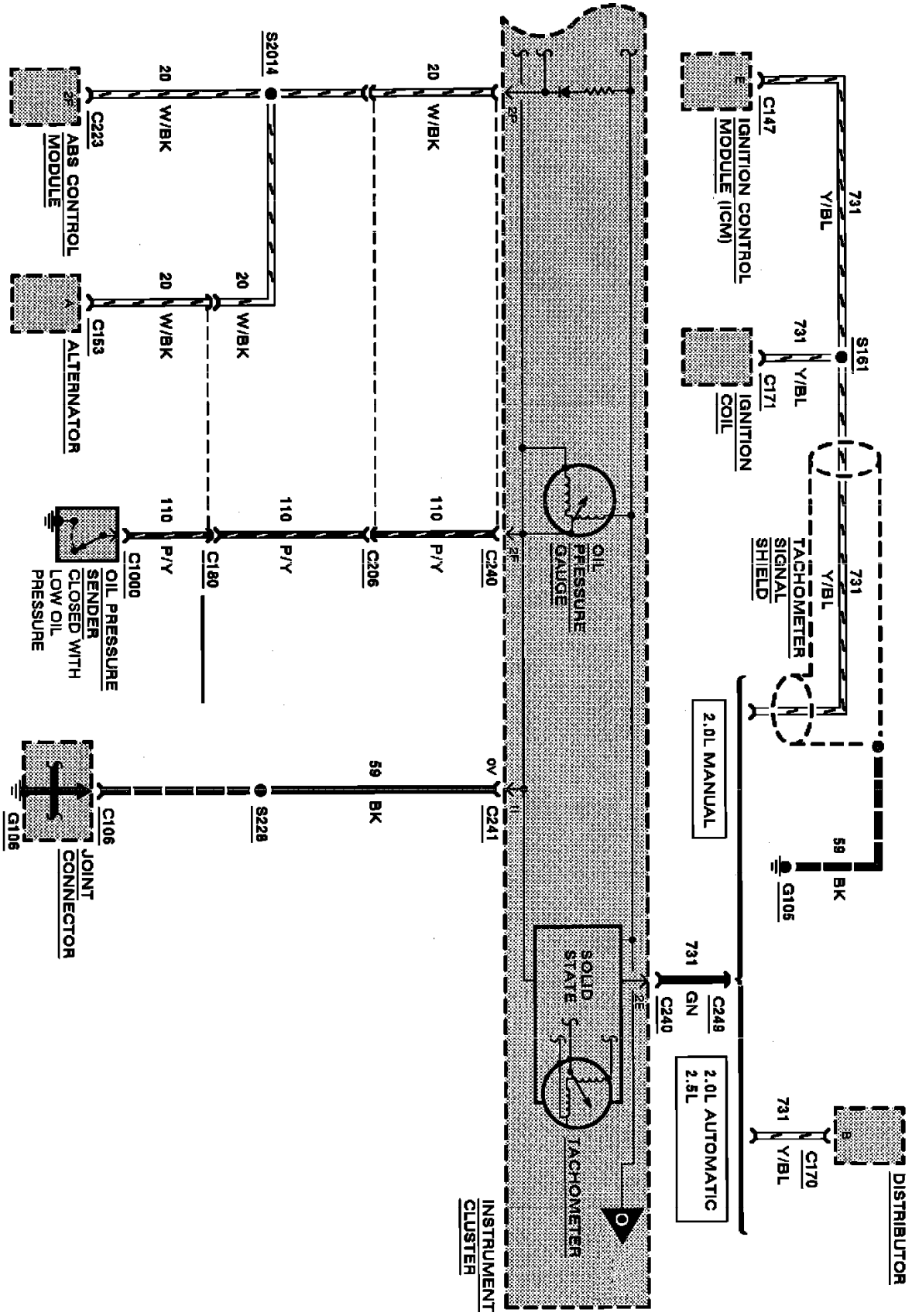

Instrument Cluster

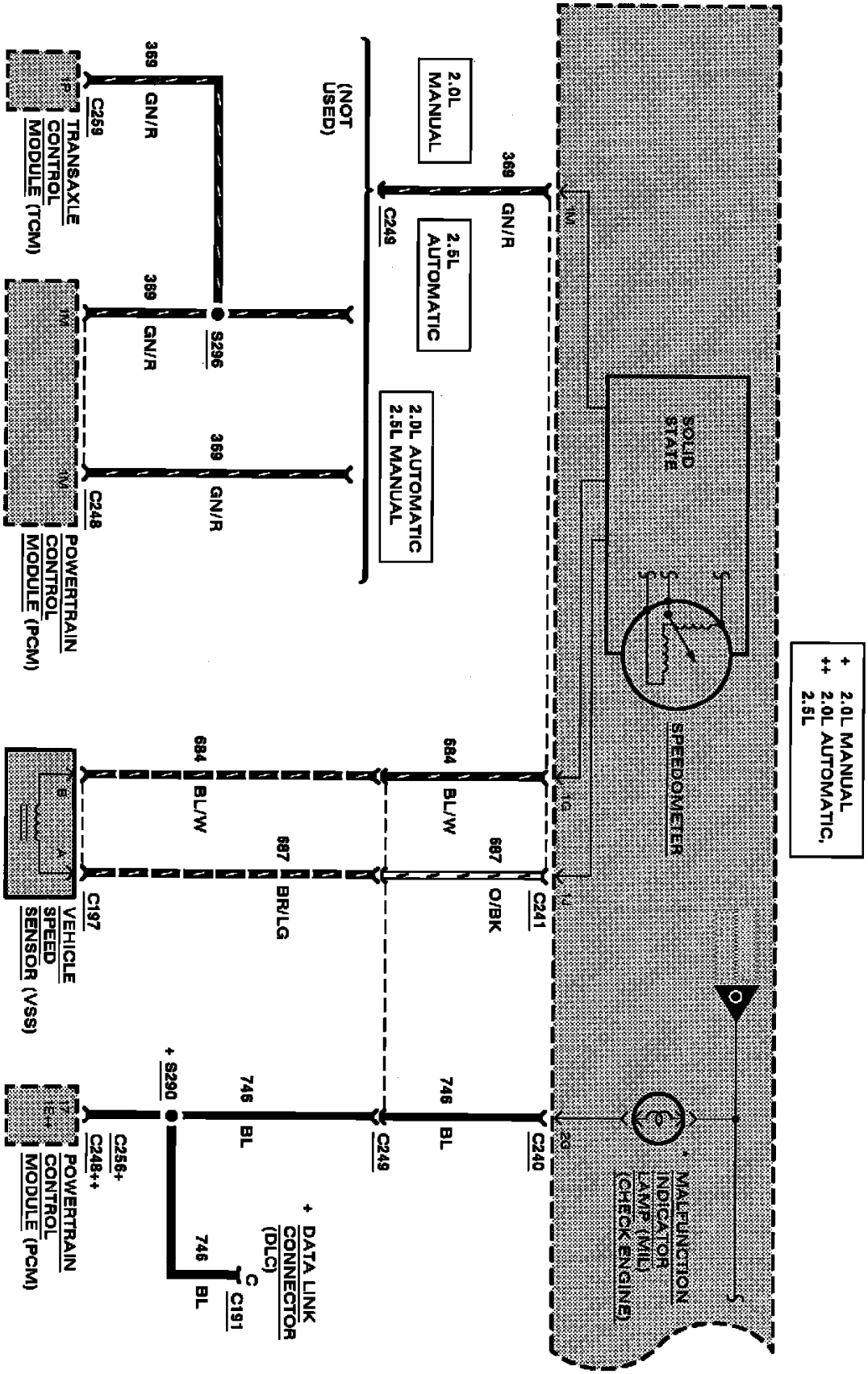

Instrument Cluster

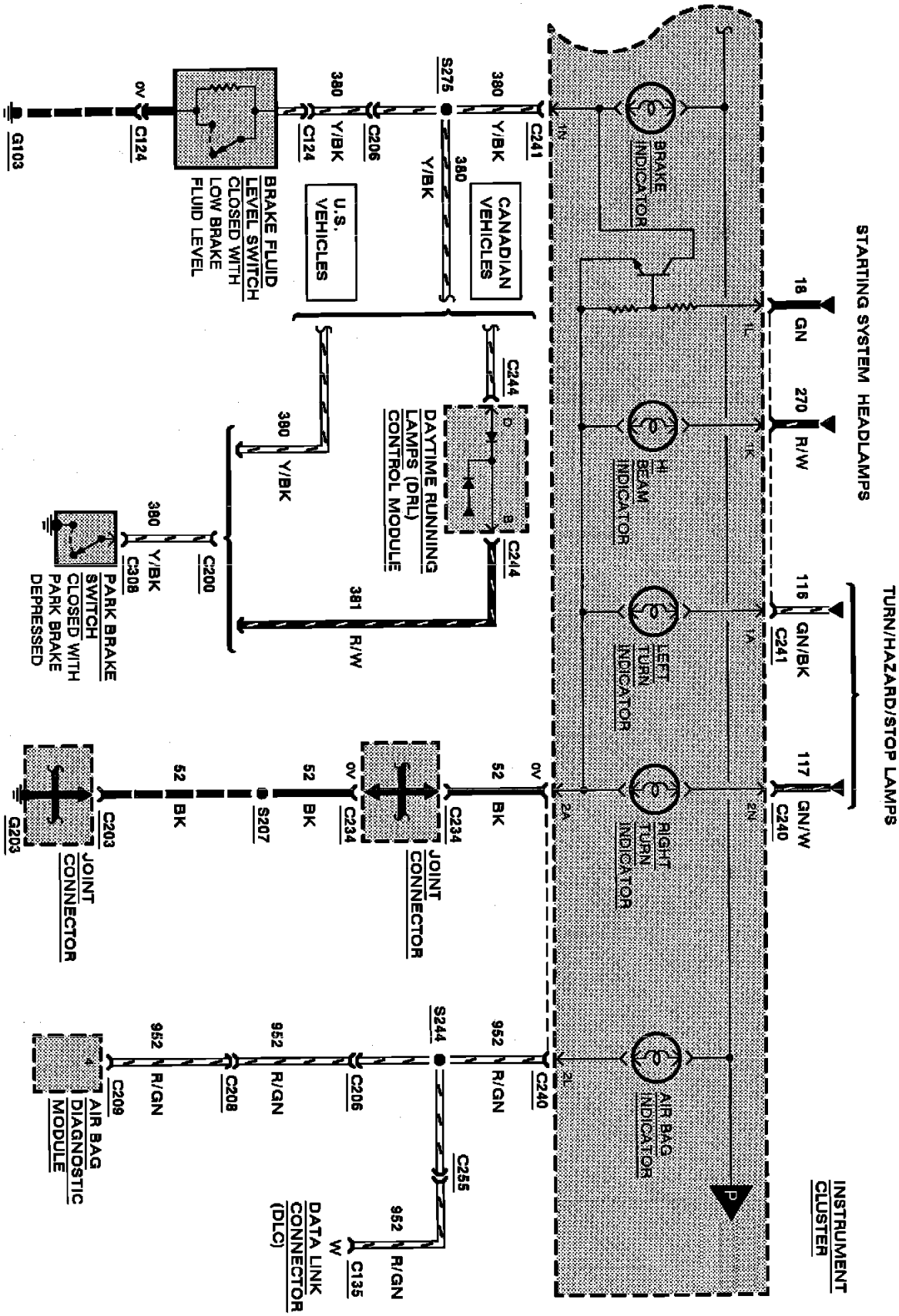

Instrument Cluster

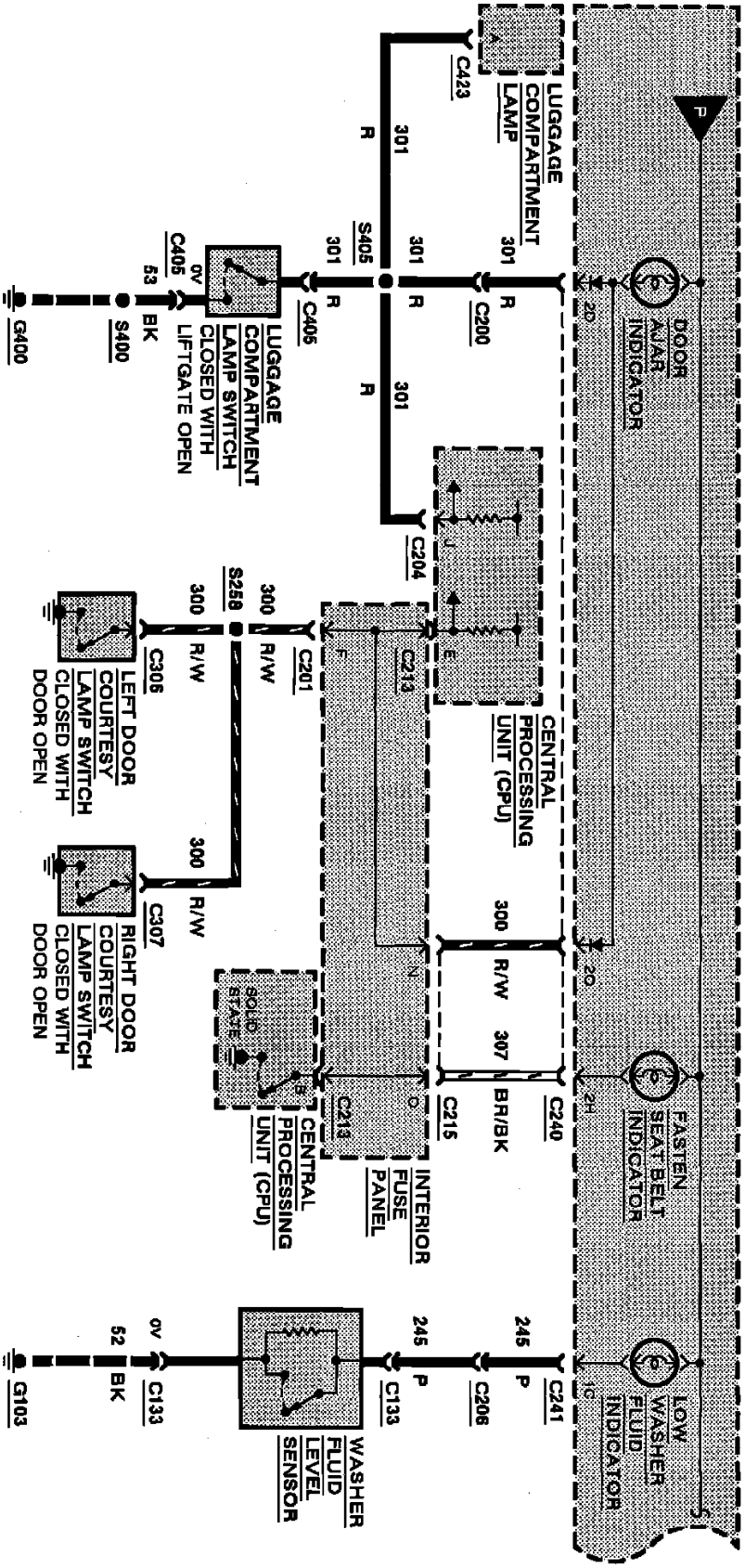

Instrument Cluster

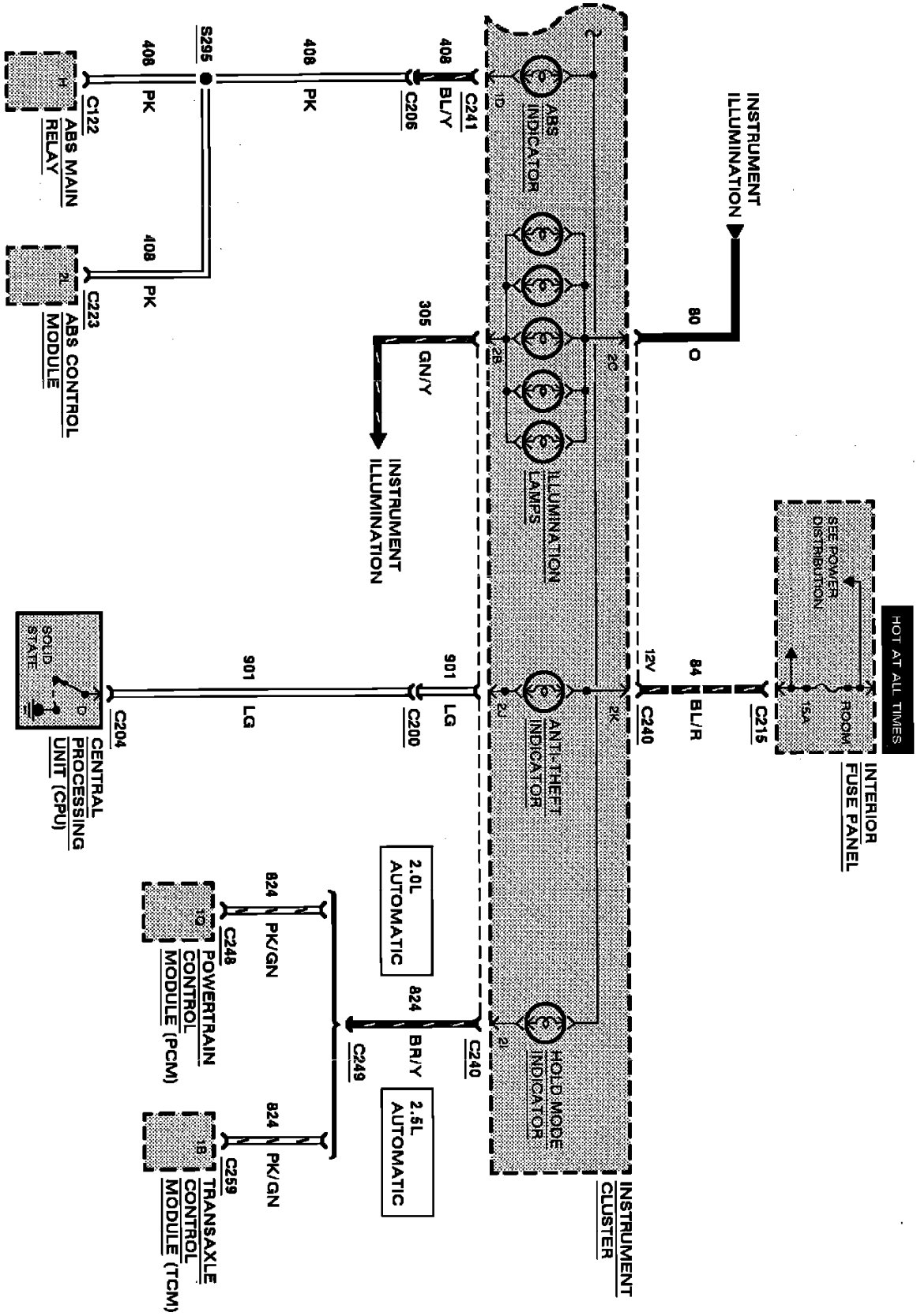

Instrument Cluster

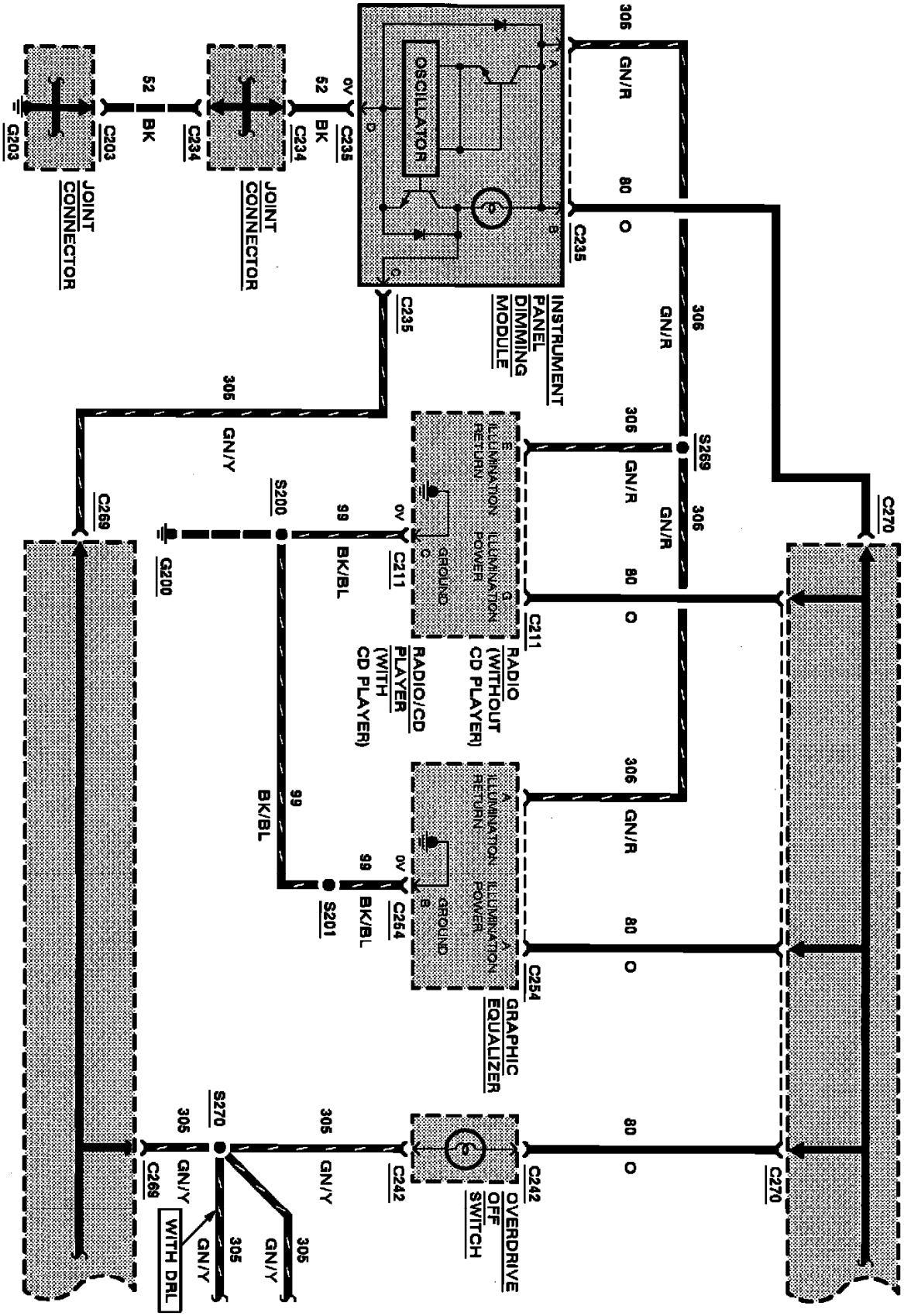

Instrument Illumination

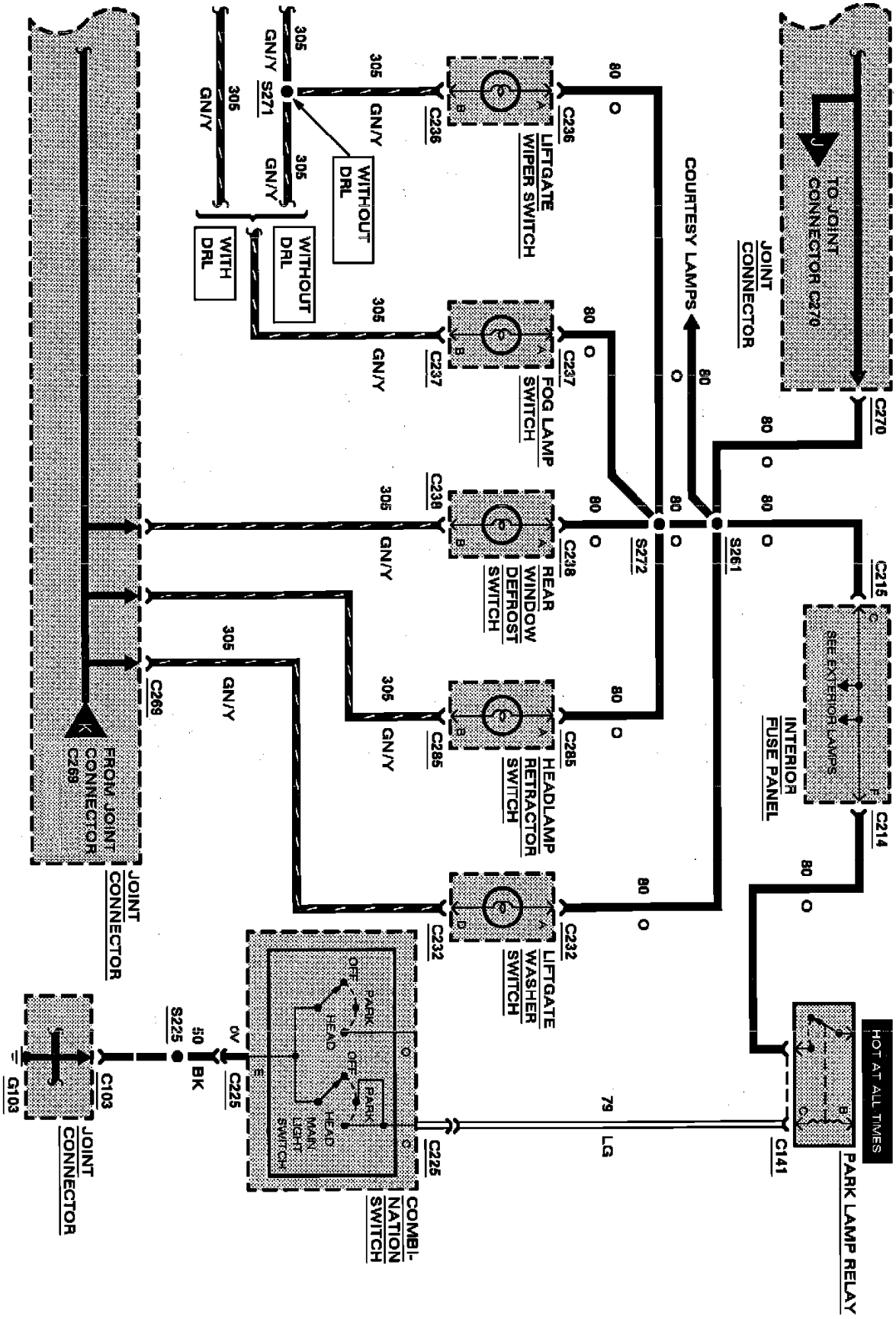

Instrument Illumination

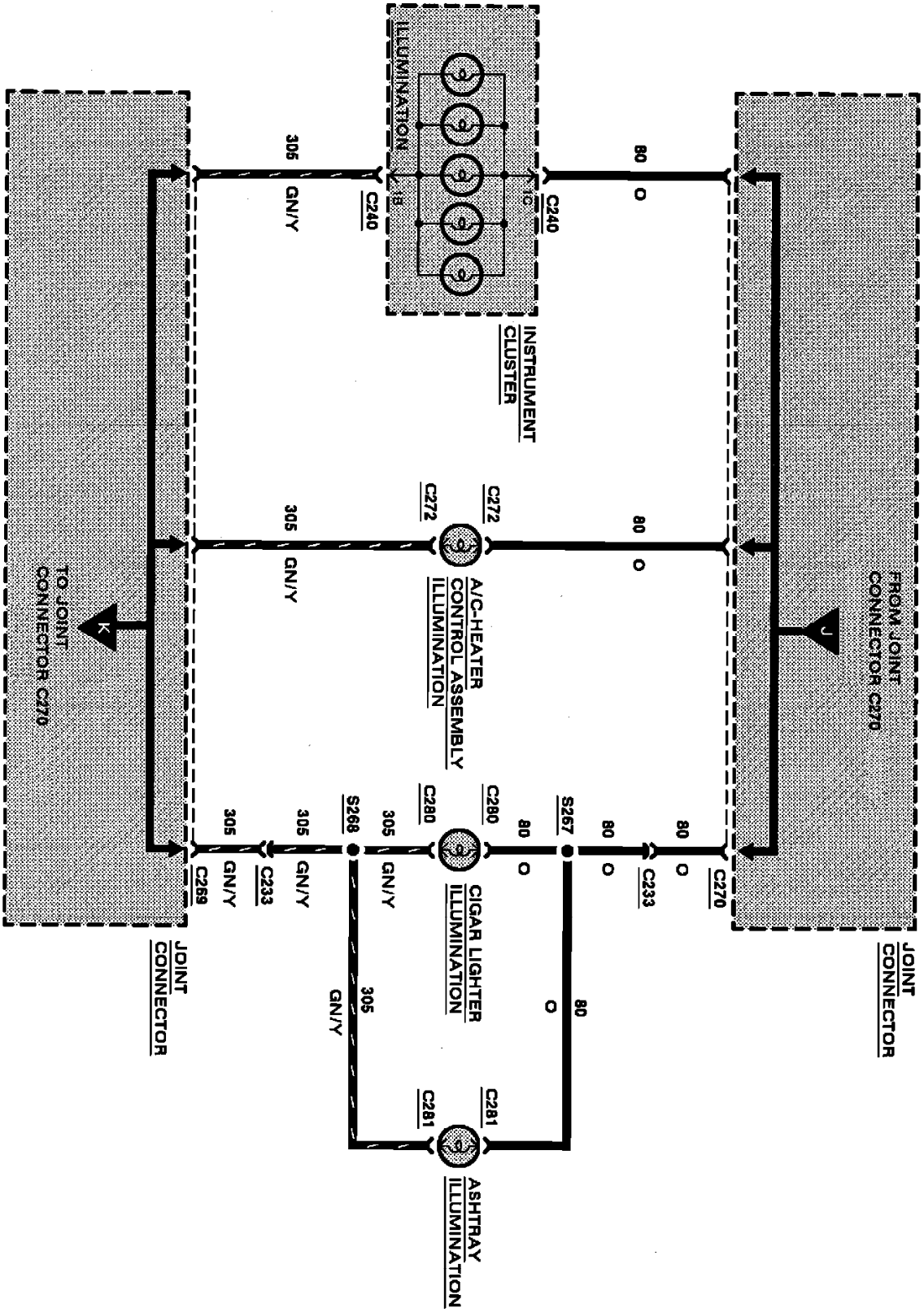

Instrument Illumination

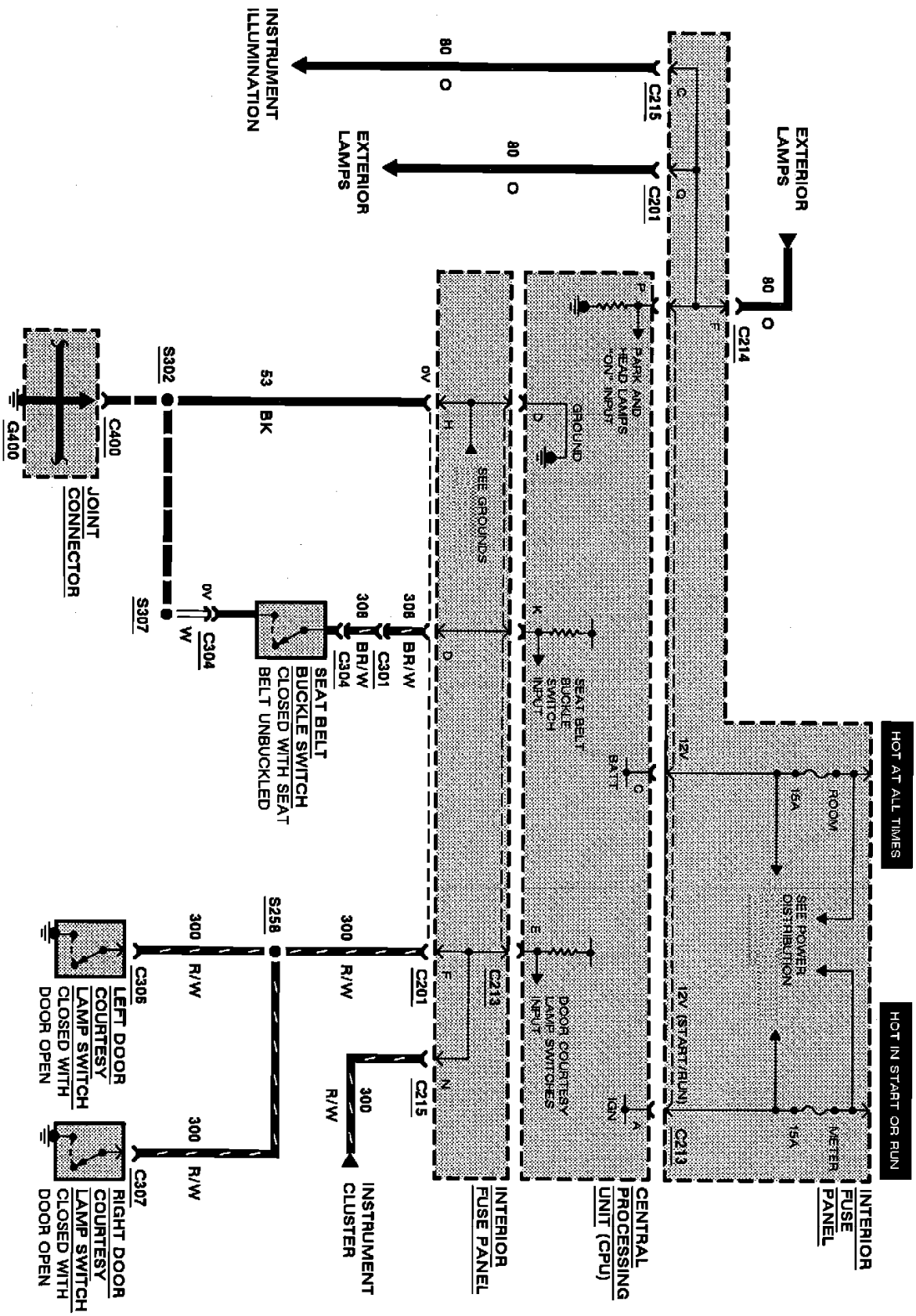

Warning Chime

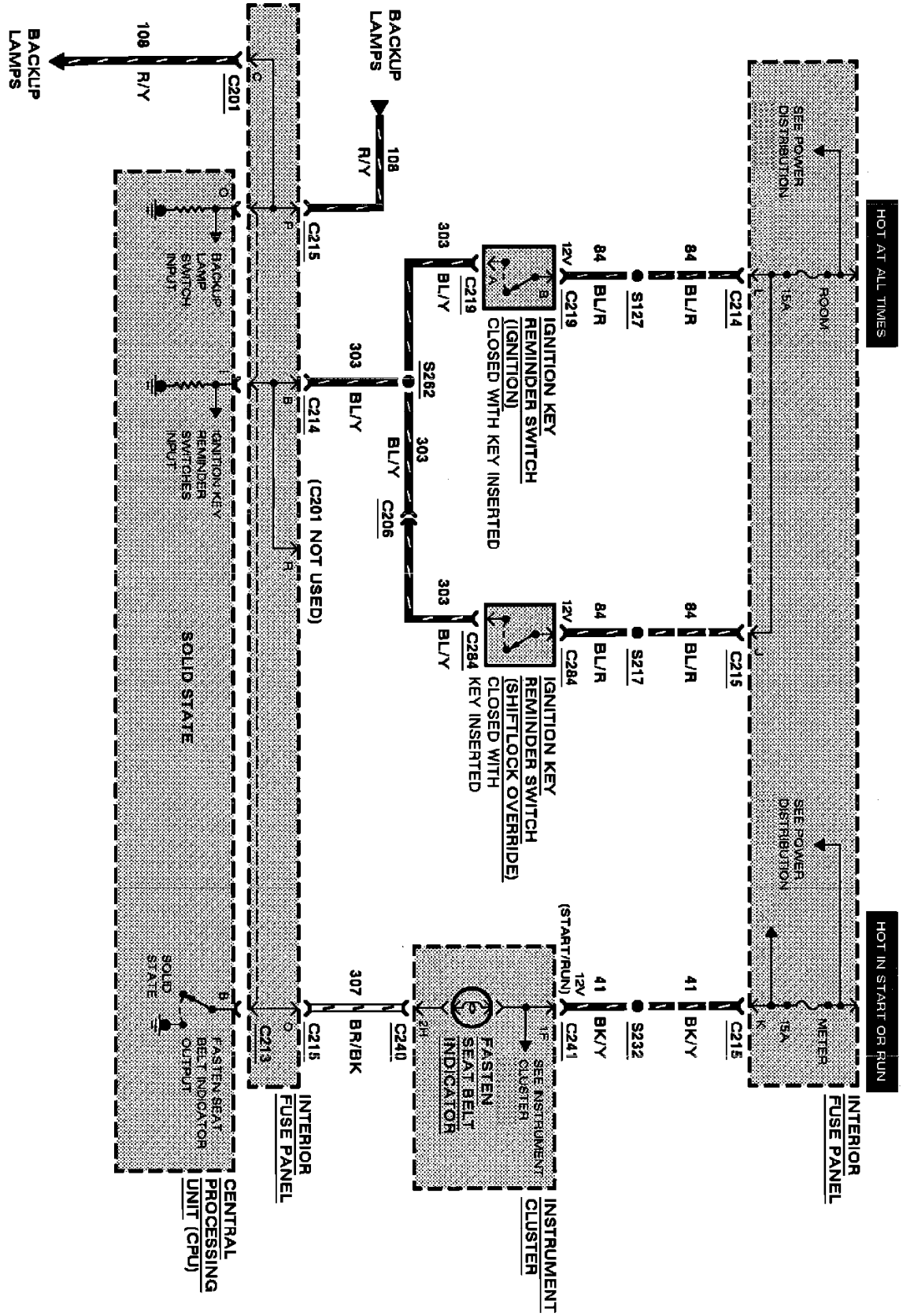

Warning Chime

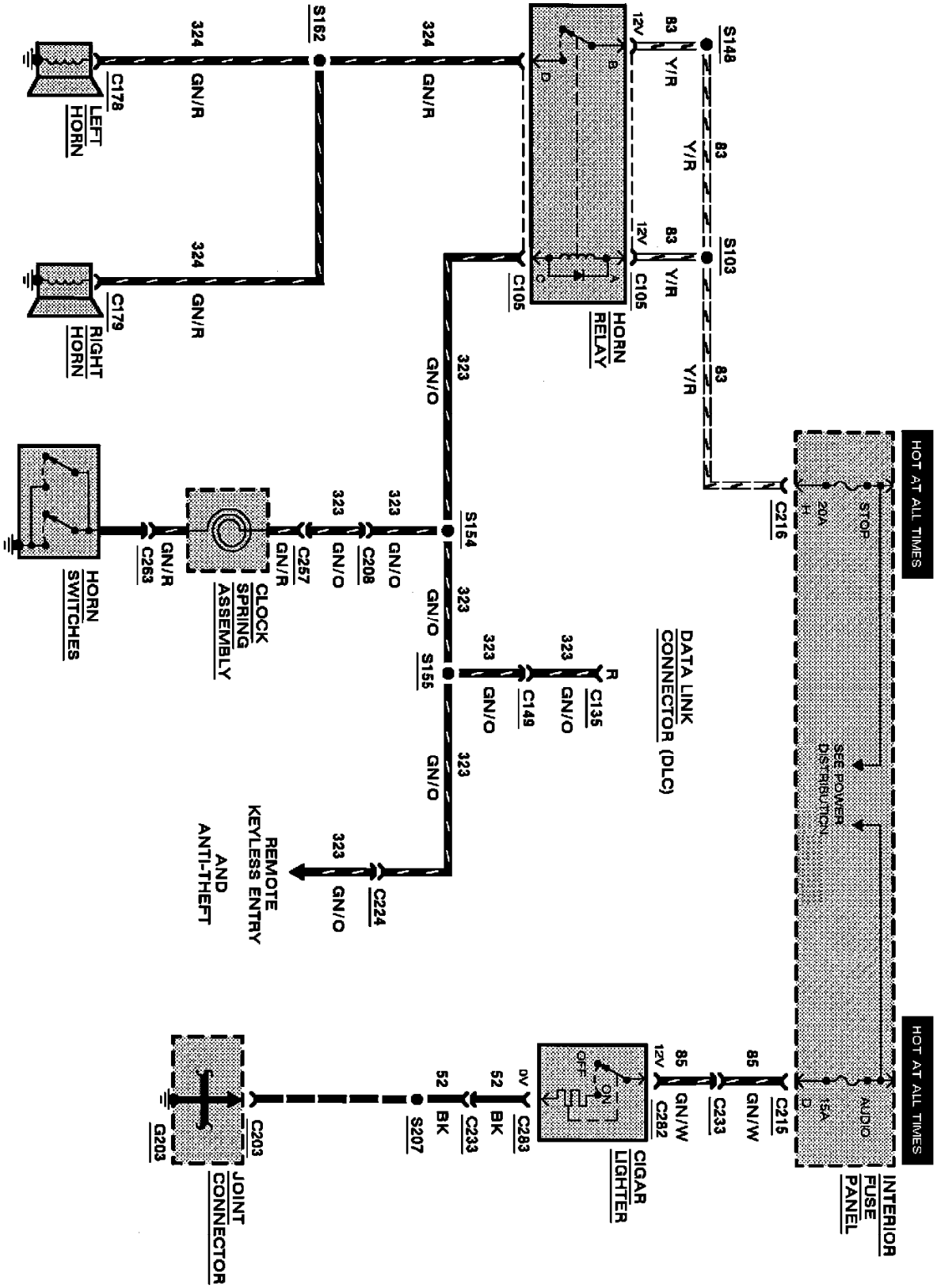

Horn/Cigar Lighter

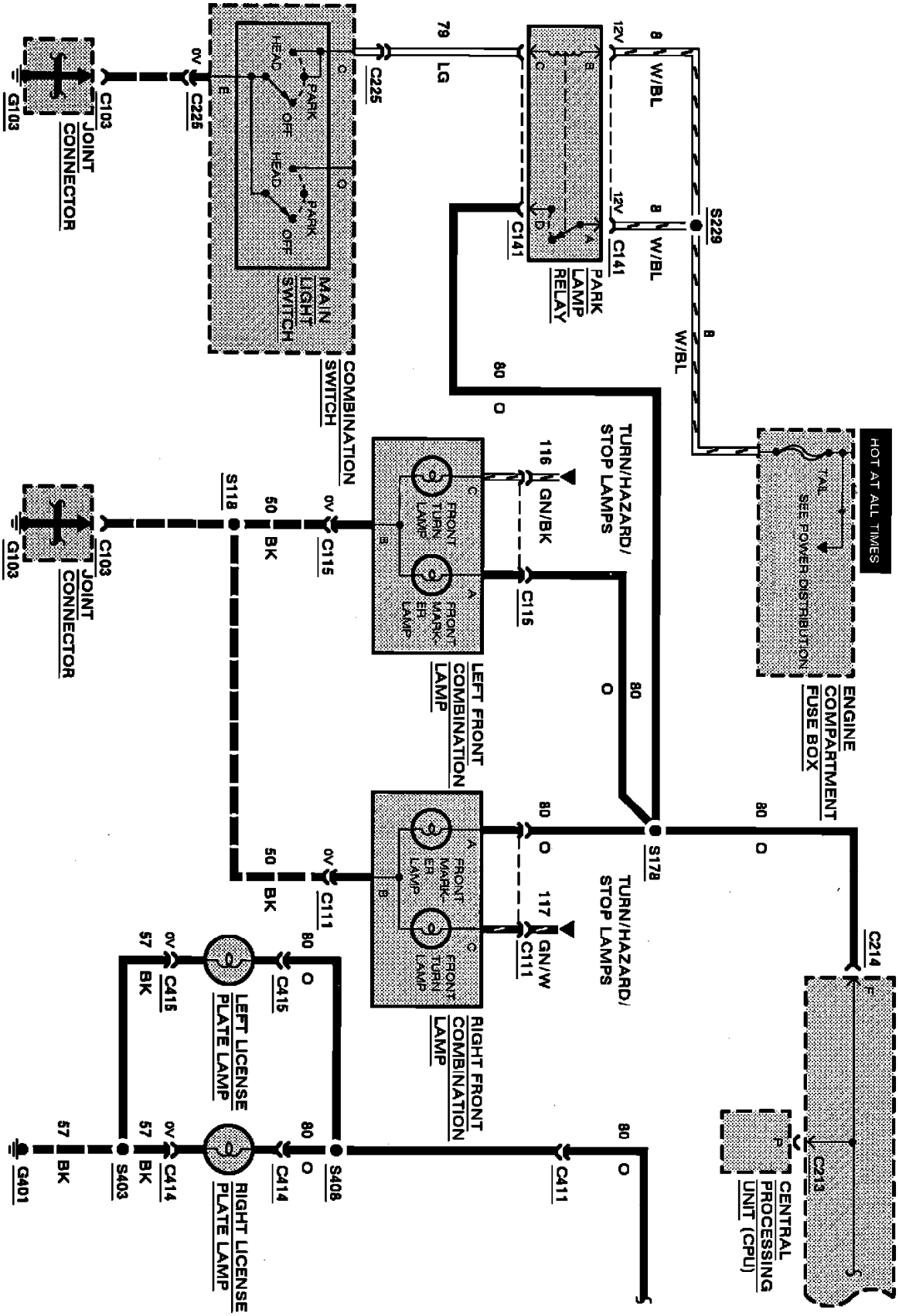

Exterior Lamps

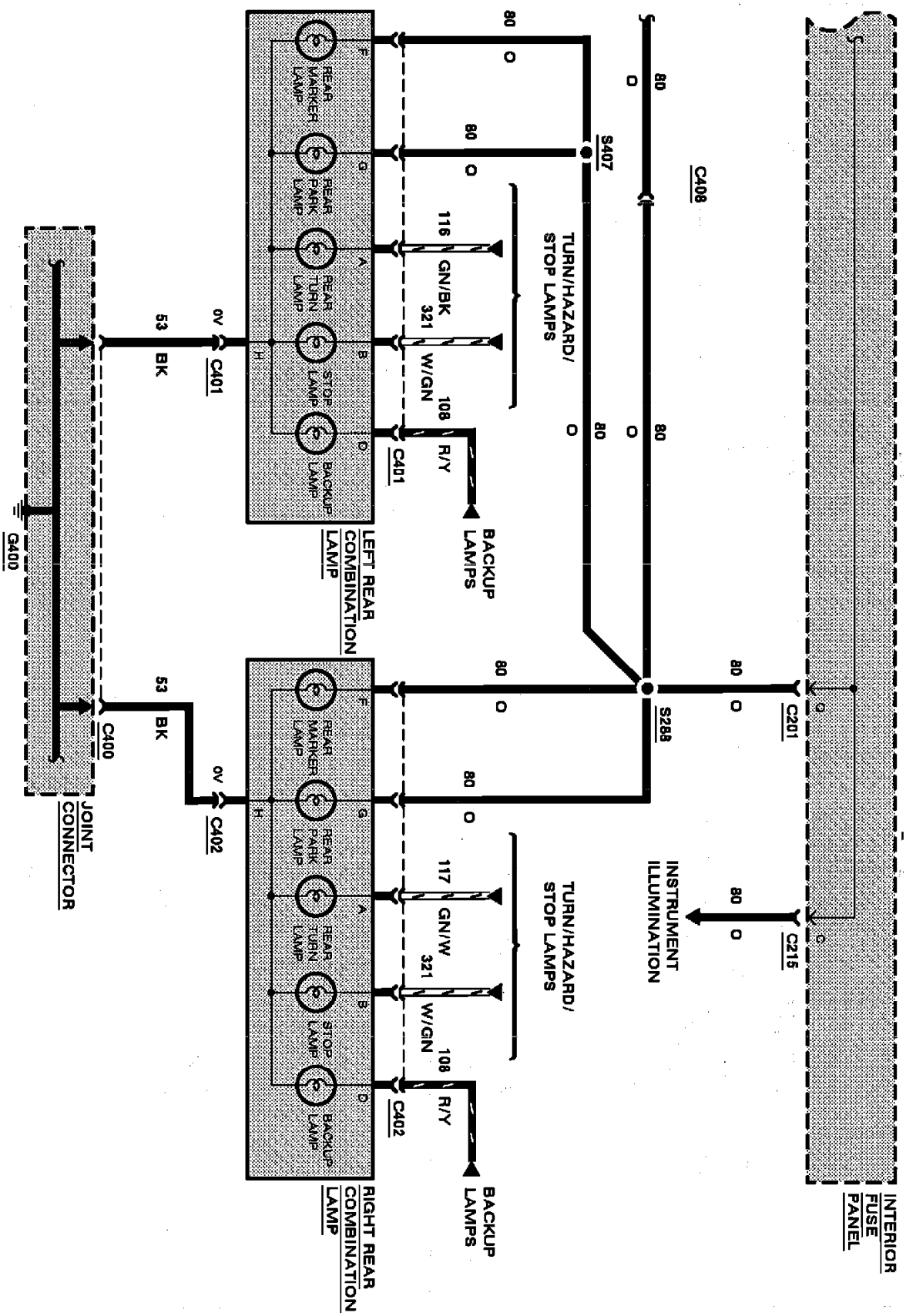

Exterior Lamps

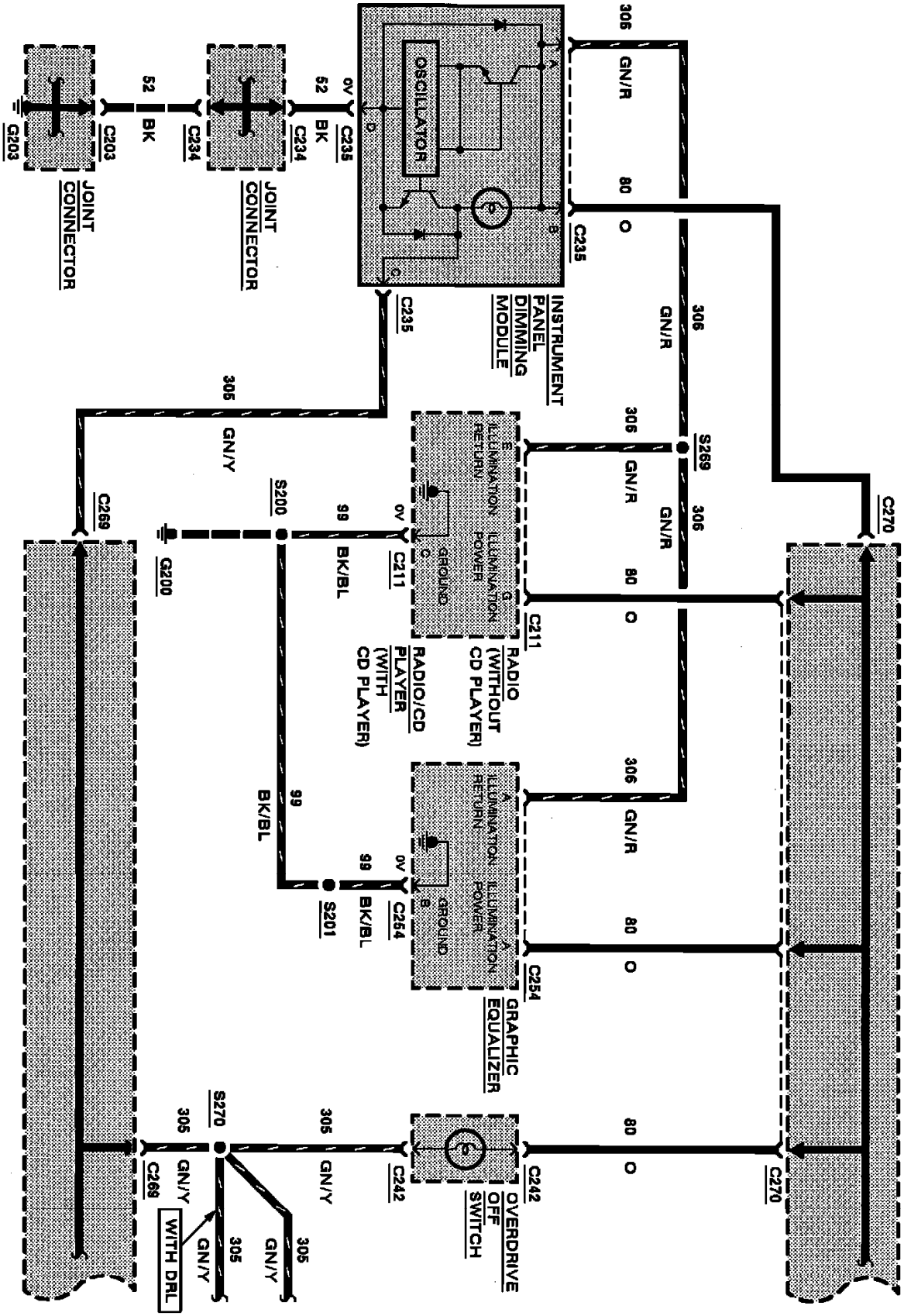

Instrument Illumination

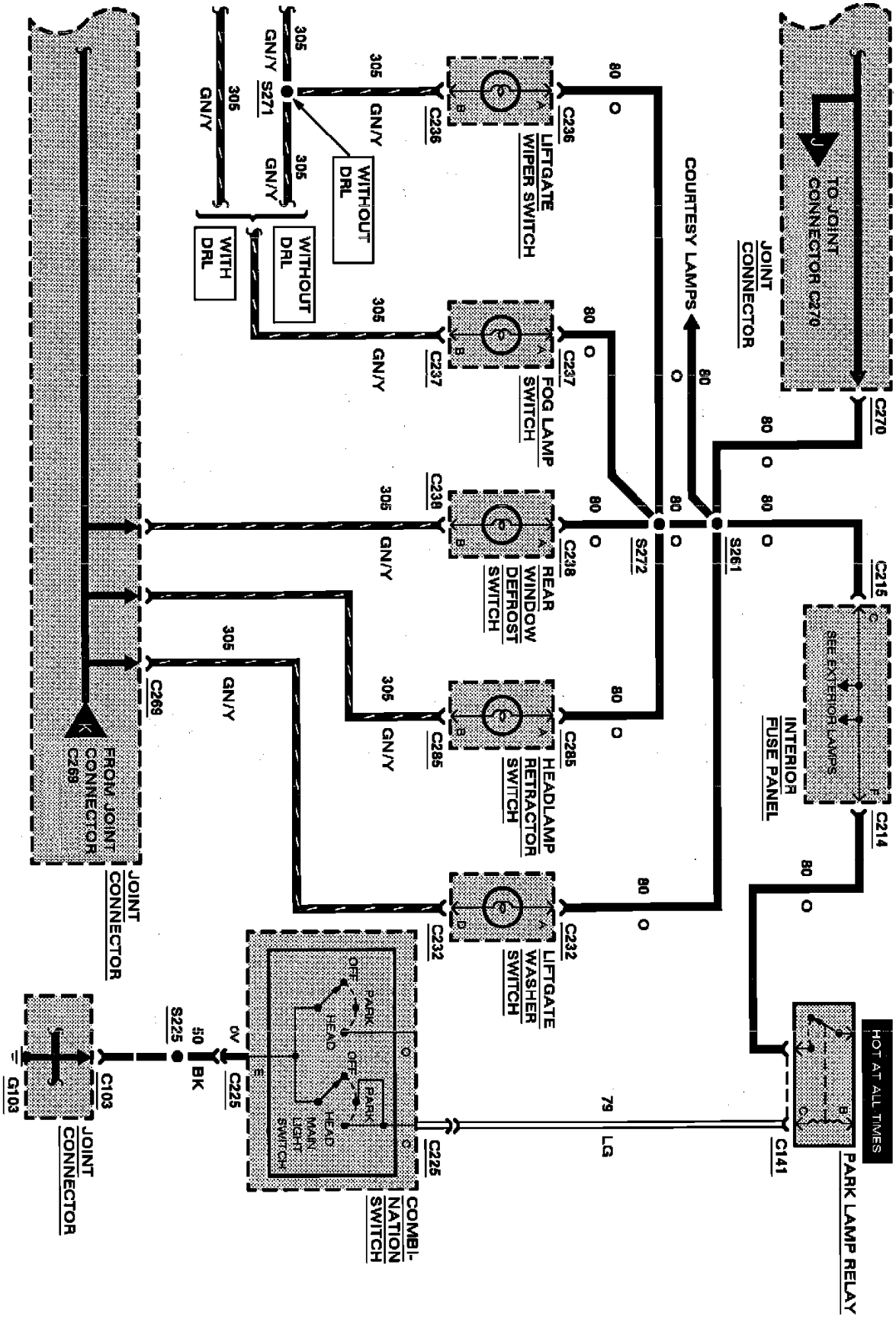

Instrument Illumination

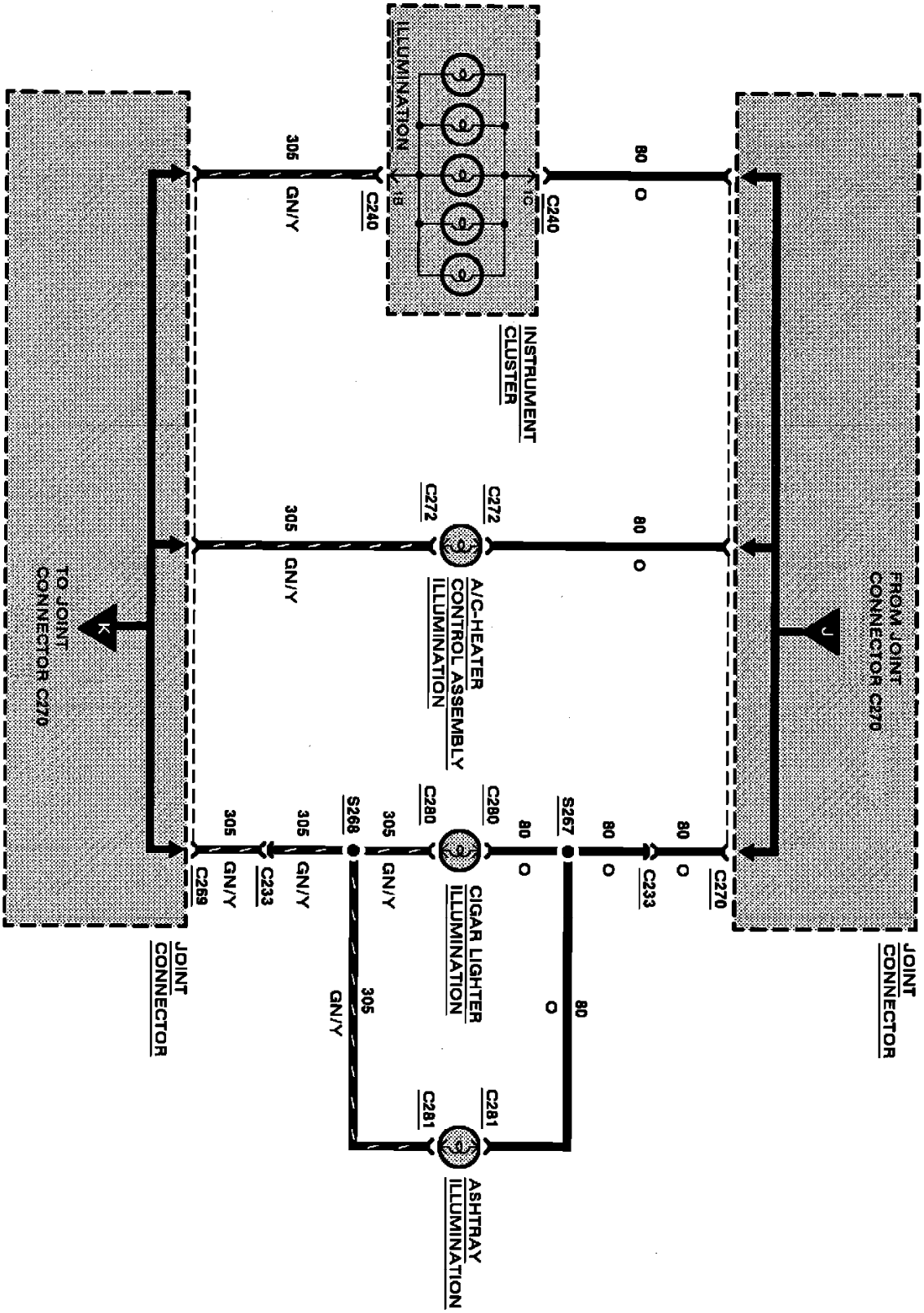

Instrument Illumination

1993 Ford Probe L4-121 2.0L DOHC VIN A MFI

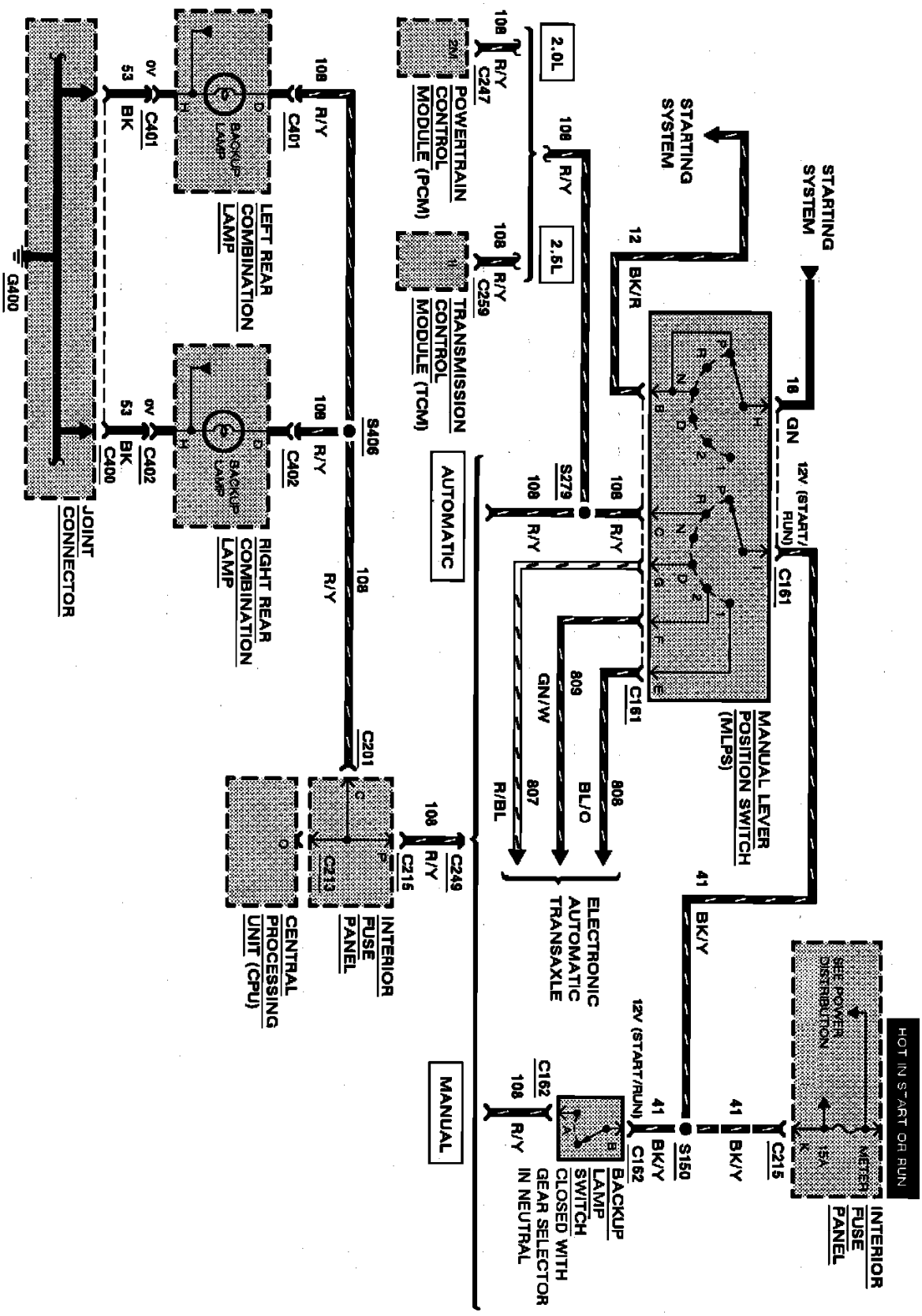

Backup Lamp

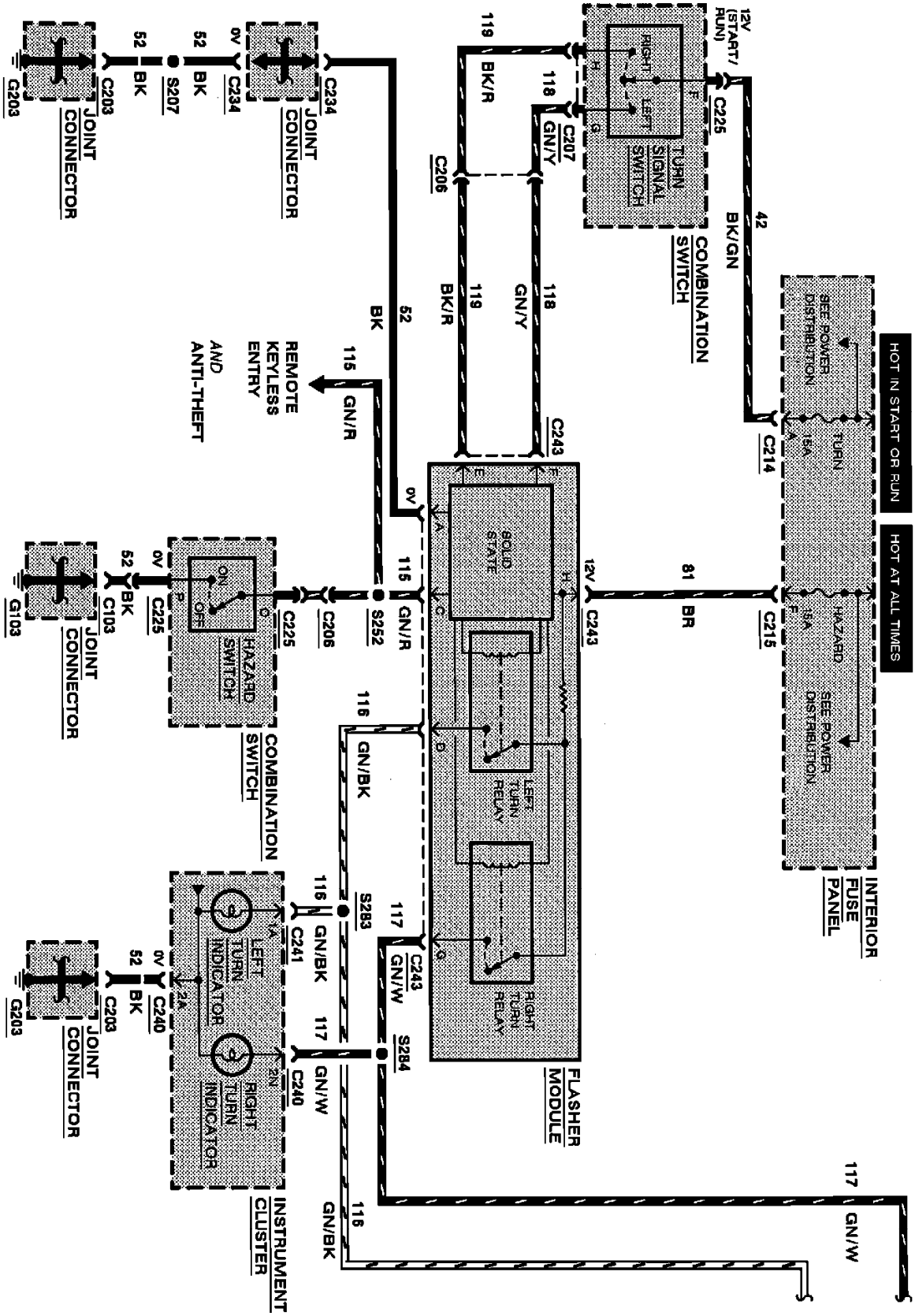

Turn/Hazard/Stop Lamps

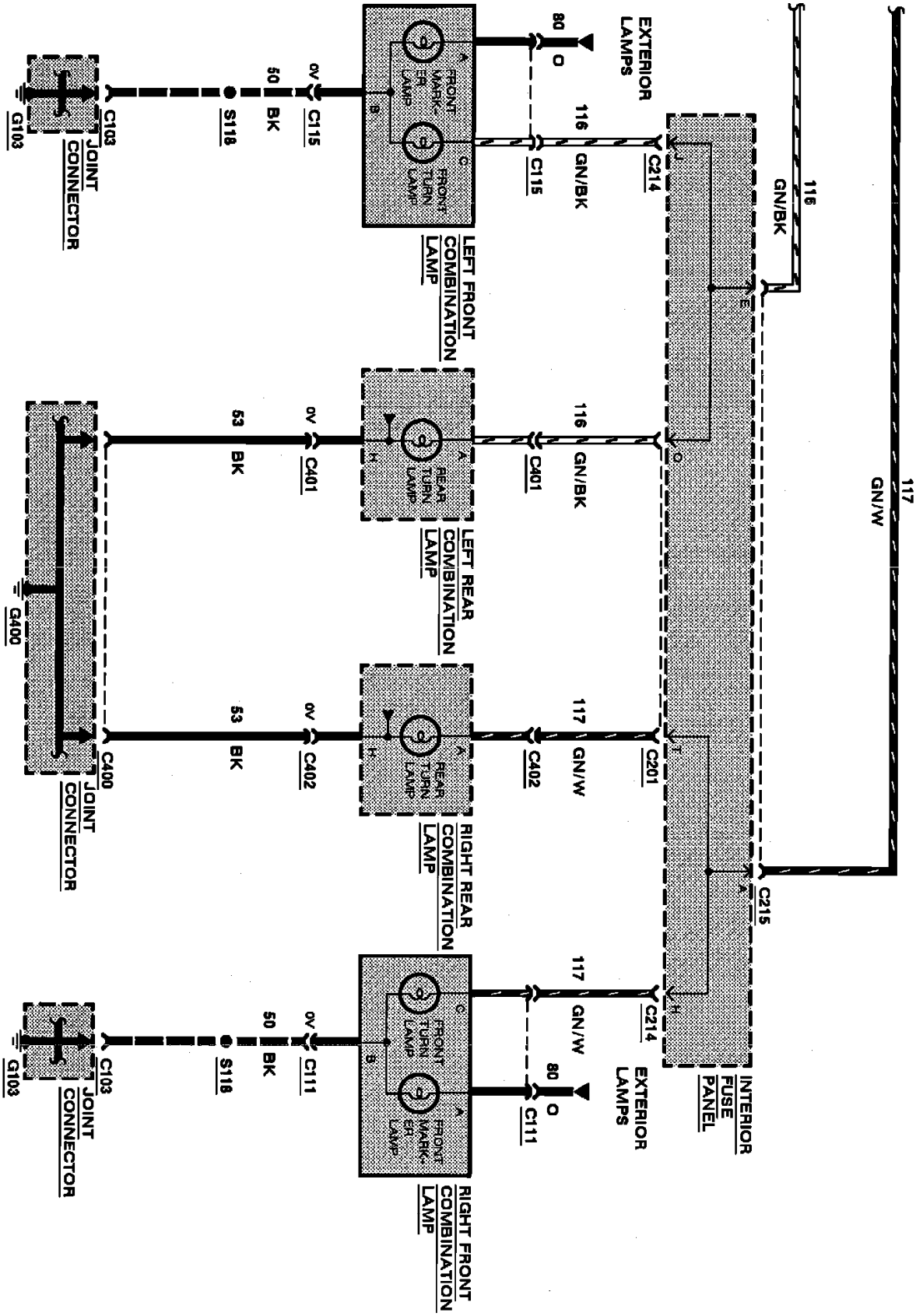

Turn/Hazard/Stop Lamps

1993 Ford Probe L4-121 2.0L DOHC VIN A MFI

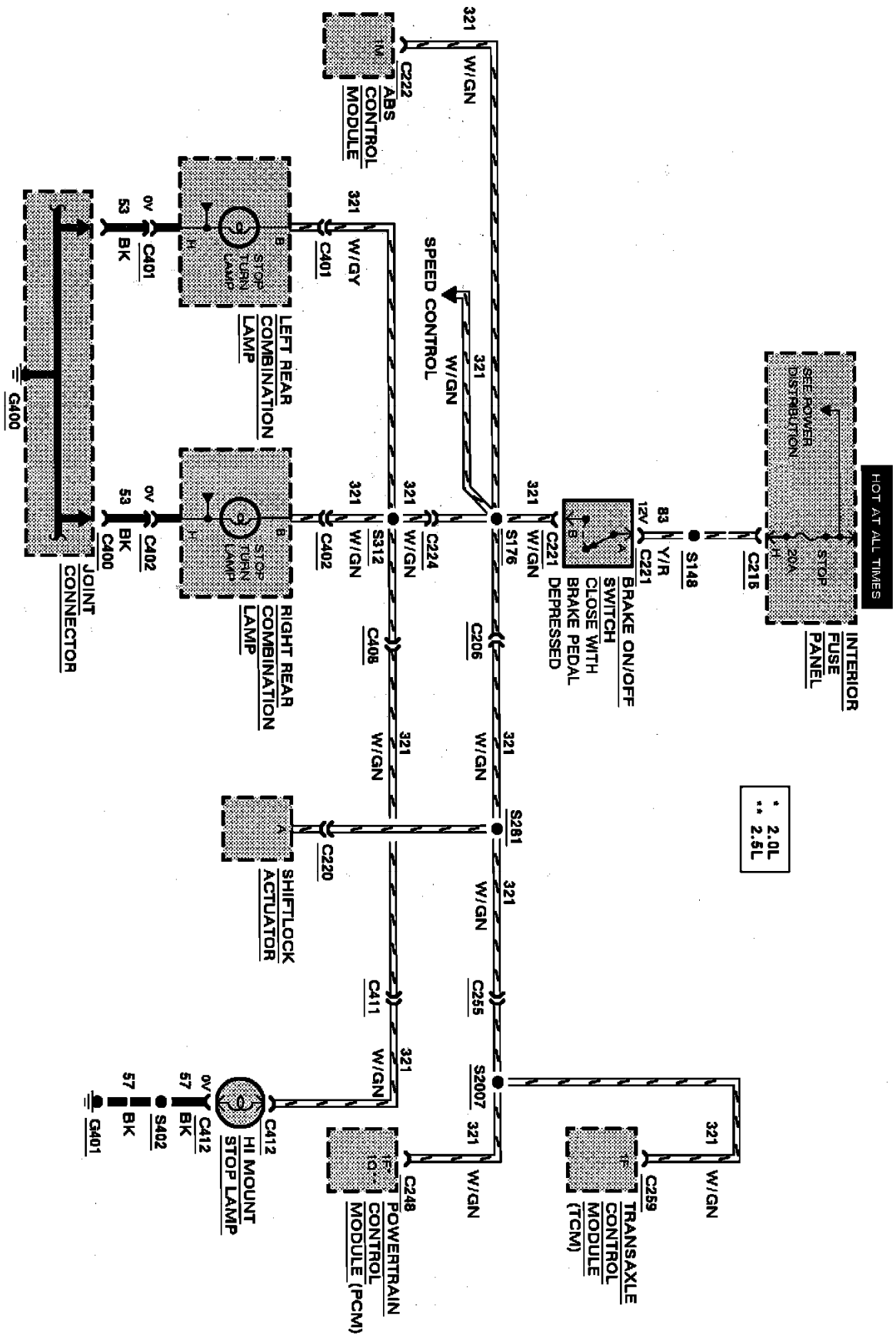

Turn/Hazard/Stop Lamps

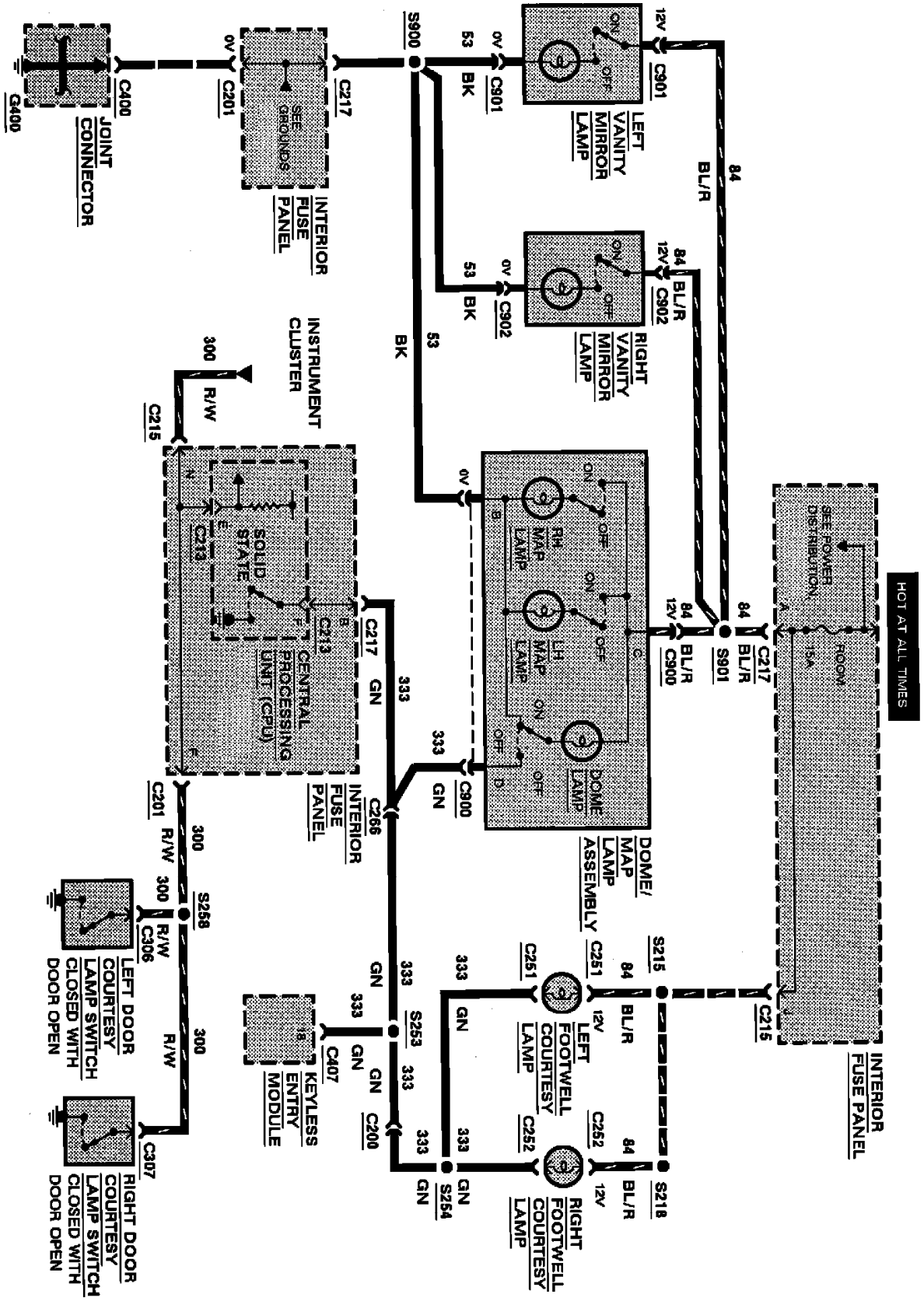

Courtesy Lamps

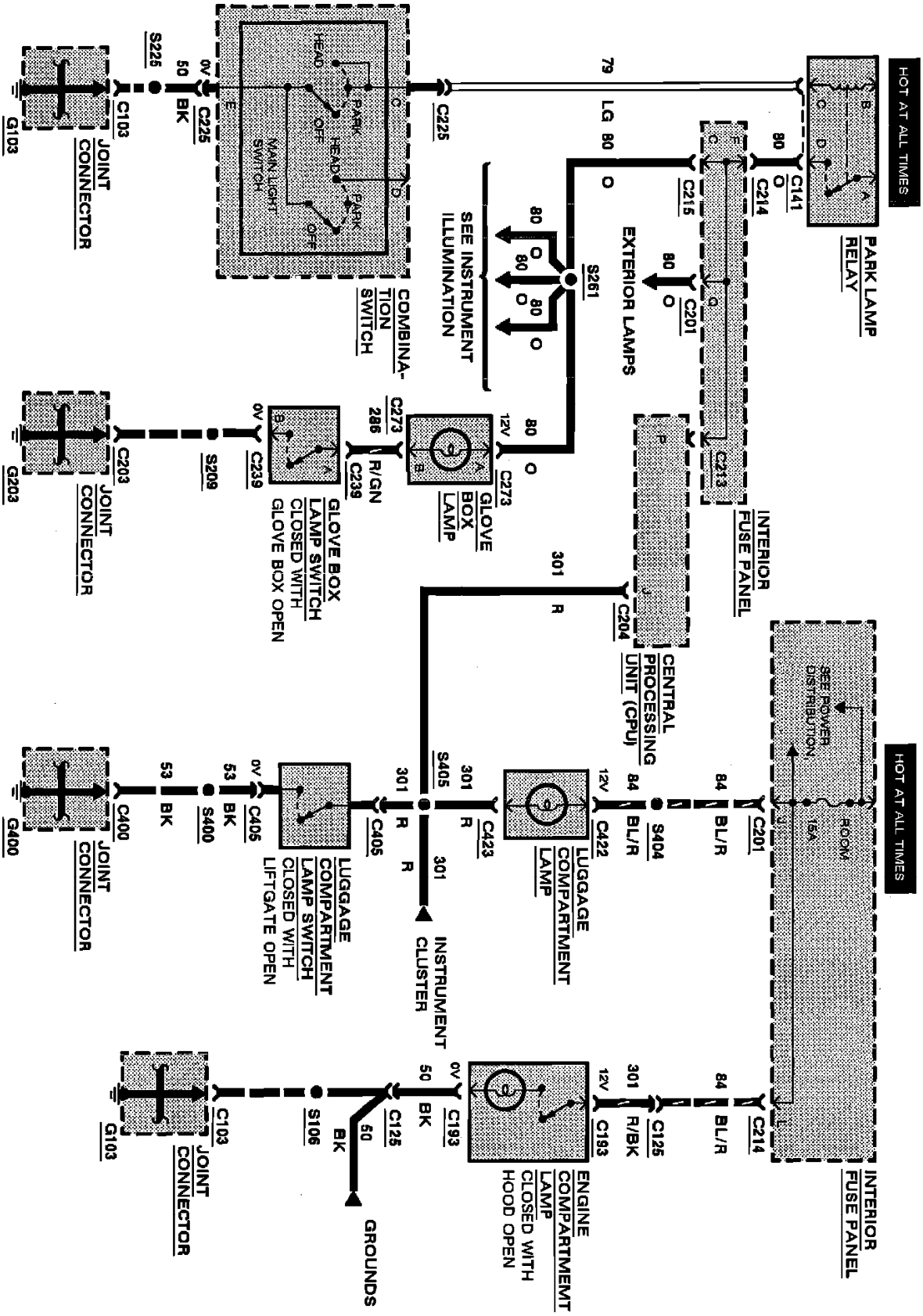

Courtesy Lamps

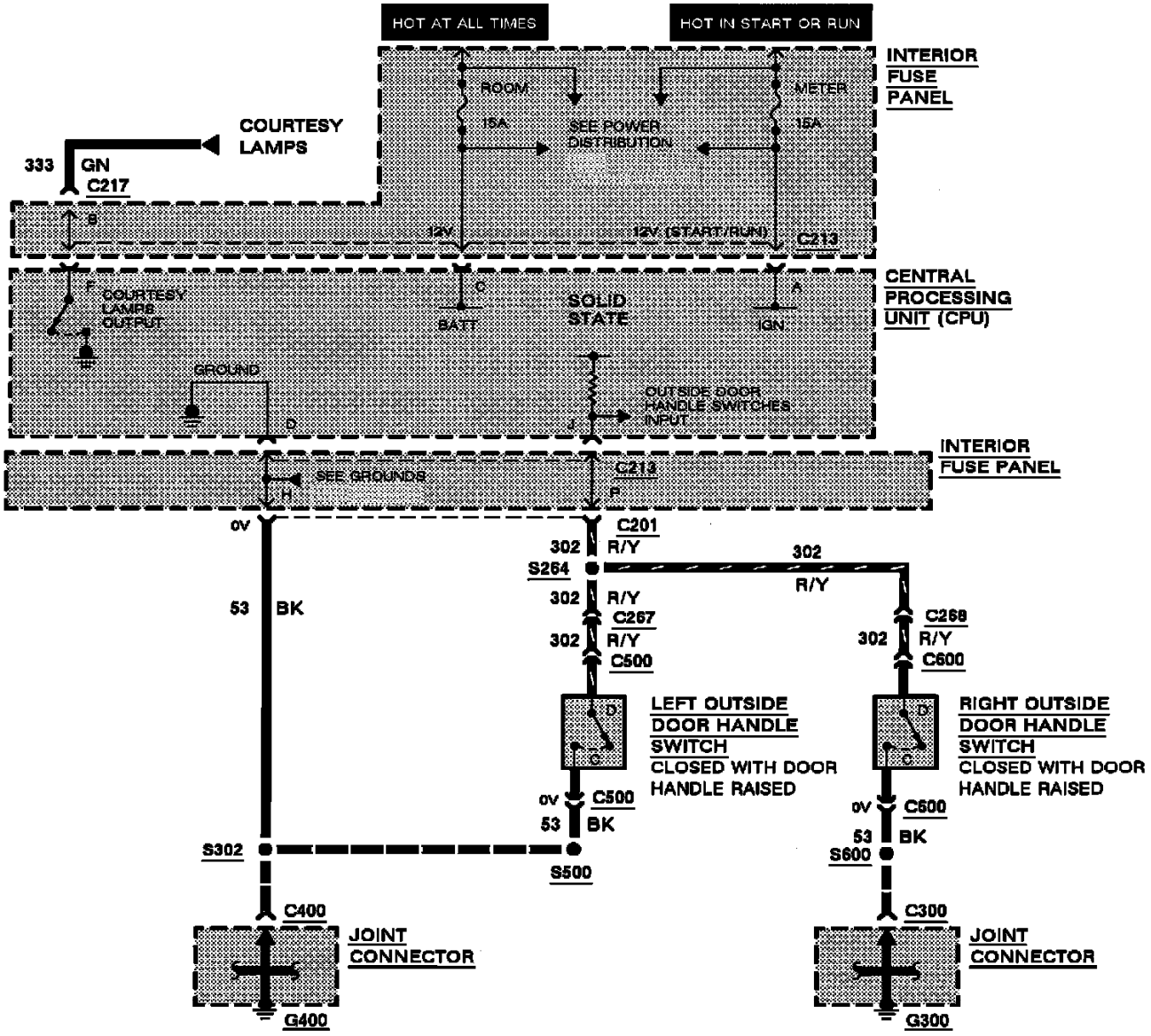

Illuminated Entry

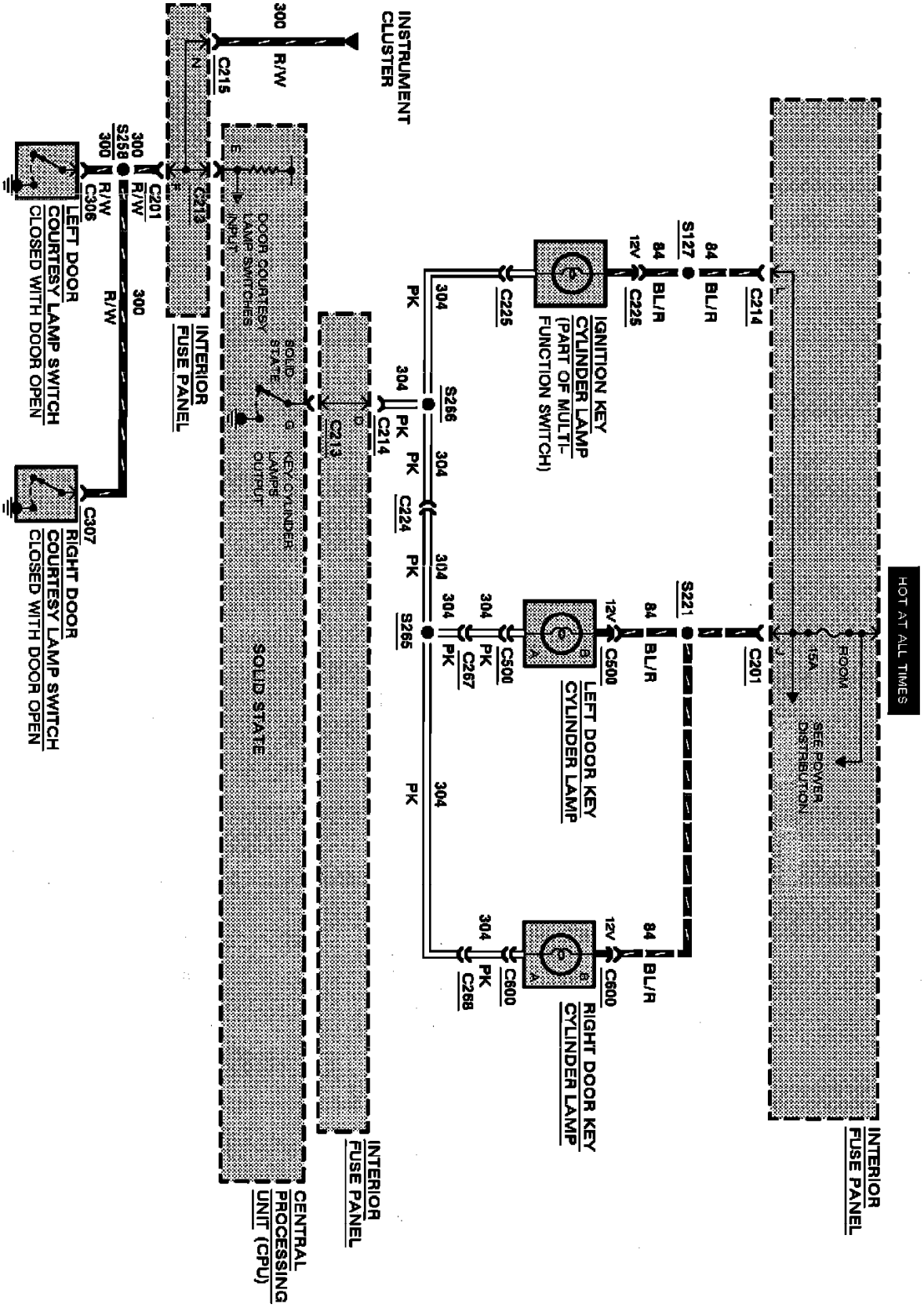

Illuminated Entry

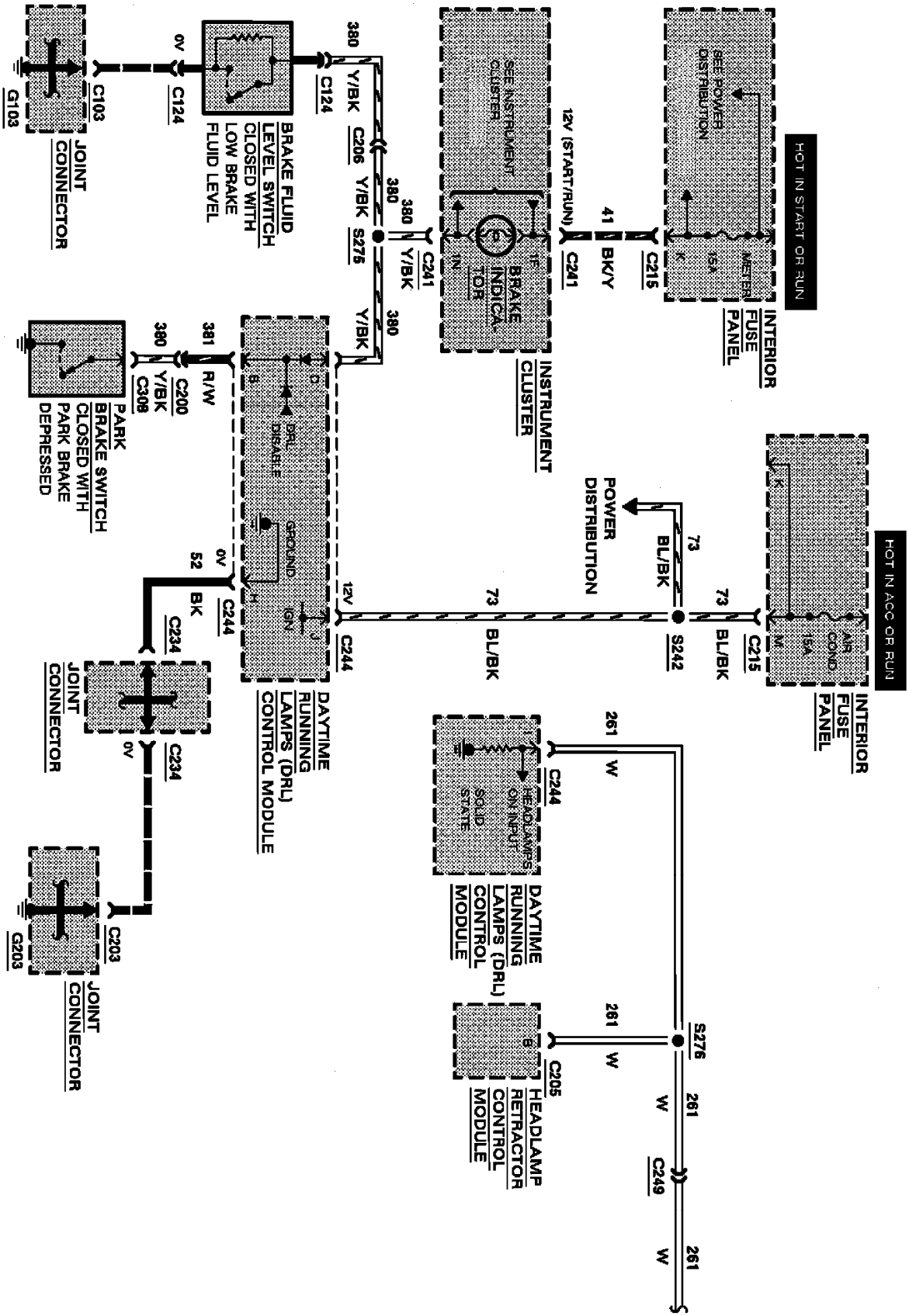

Daytime Running Lamps

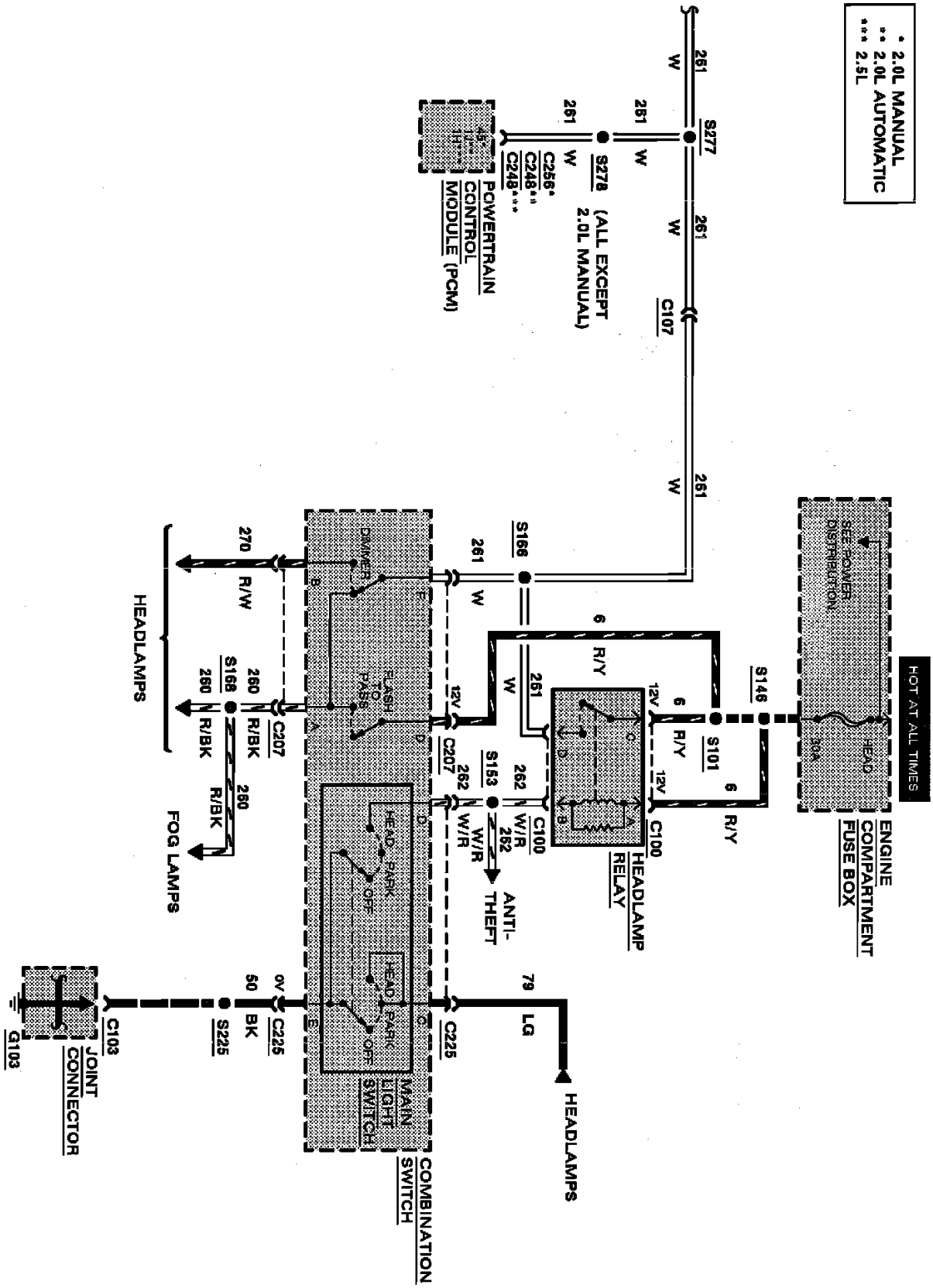

Daytime Running Lamps

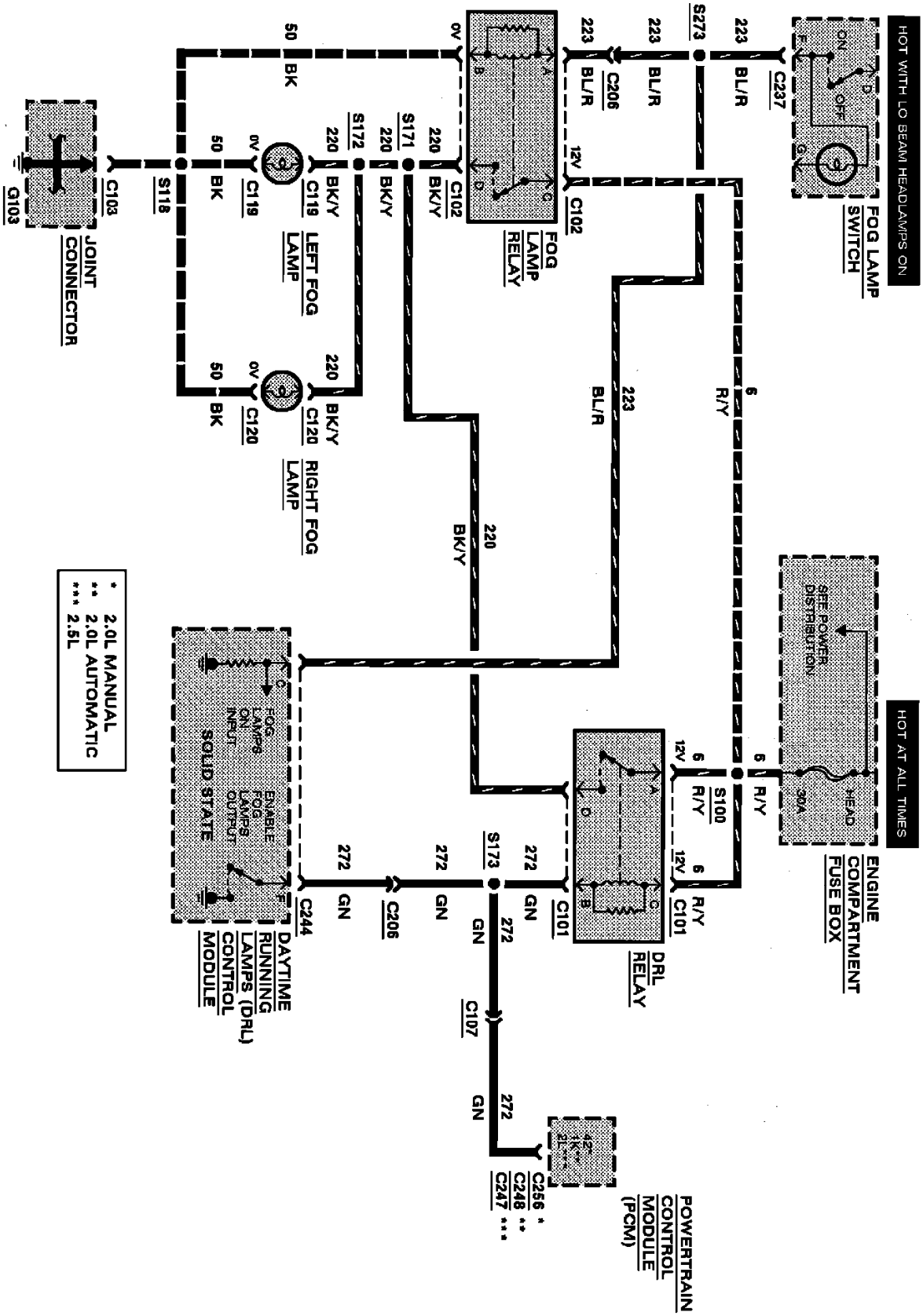

Daytime Running Lamps

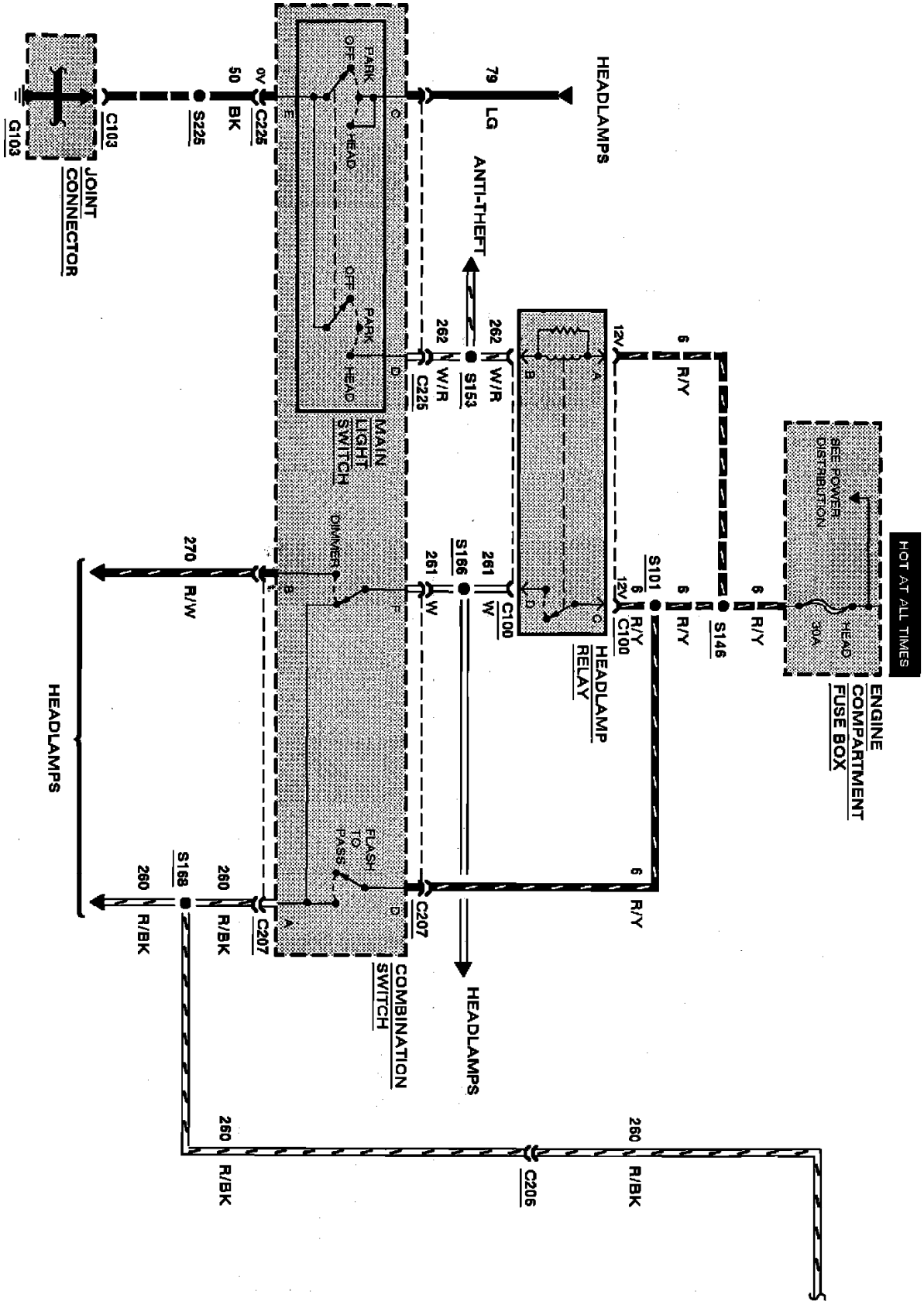
HOT AT ALL TIMES
ENGINE COMPARTMENT FUSE BOX
SEE POWER DISTRIBUTION
HEAD
30A
S146
6
R/Y
S101
12V
C100
HEADLAMP RELAY
A
B
C
D
W/R
262
S153
ANTI-THEFT
C225
MAIN LIGHT SWITCH
PARK
OFF
HEAD
DIMMER
FLASH TO PASS
E
F
79
LG
HEADLAMPS
0V
50
BK
S225
C103
JOINT CONNECTOR
G103
261
W
S166
270
R/W
C207
COMBINATION SWITCH
260
R/BK
S168
C206

Foglamps

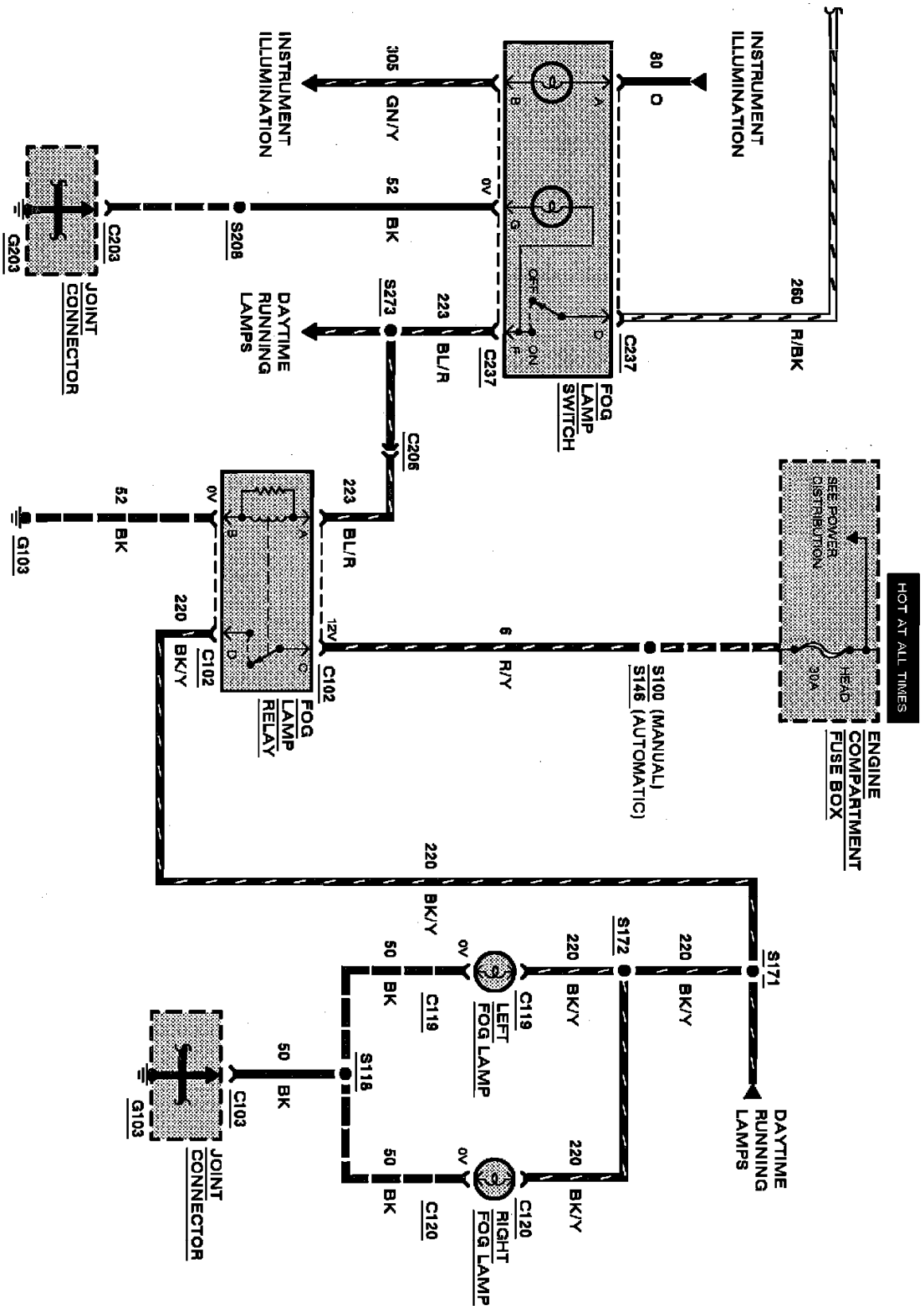
HOT AT ALL TIMES
ENGINE COMPARTMENT FUSE BOX
SEE POWER DISTRIBUTION
HEAD
20A
260
R/BK
C237
FOG LAMP SWITCH
OFF
ON
80
O
INSTRUMENT ILLUMINATION
305
GN/Y
INSTRUMENT ILLUMINATION
0V
52
BK
S208
C203
JOINT CONNECTOR
G203
223
BL/R
S273
DAYTIME RUNNING LAMPS
C206
223
BL/R
12V
C102
FOG LAMP RELAY
0V
52
BK
G103
220
BK/Y
C102
6
R/Y
S100 (MANUAL)
S146 (AUTOMATIC)
S171
DAYTIME RUNNING LAMPS
220
BK/Y
S172
220
BK/Y
C119
LEFT FOG LAMP
0V
C119
50
BK
S118
50
BK
C103
JOINT CONNECTOR
G103
220
BK/Y
220
BK/Y
C120
RIGHT FOG LAMP
0V
C120
50
BK

Foglamps

1993 Ford Probe L4-121 2.0L DOHC VIN A MFI

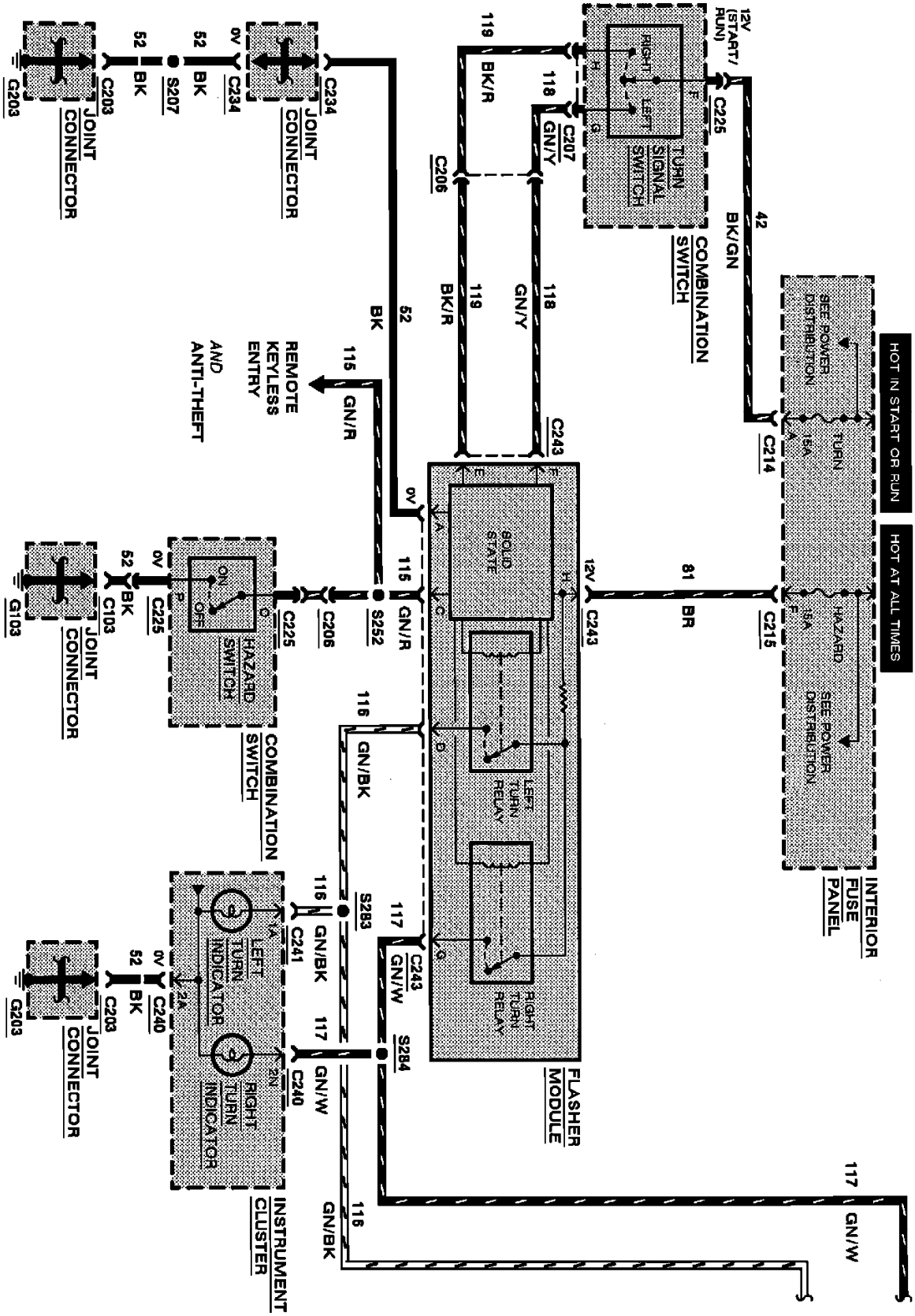

Turn/Hazard/Stop Lamps

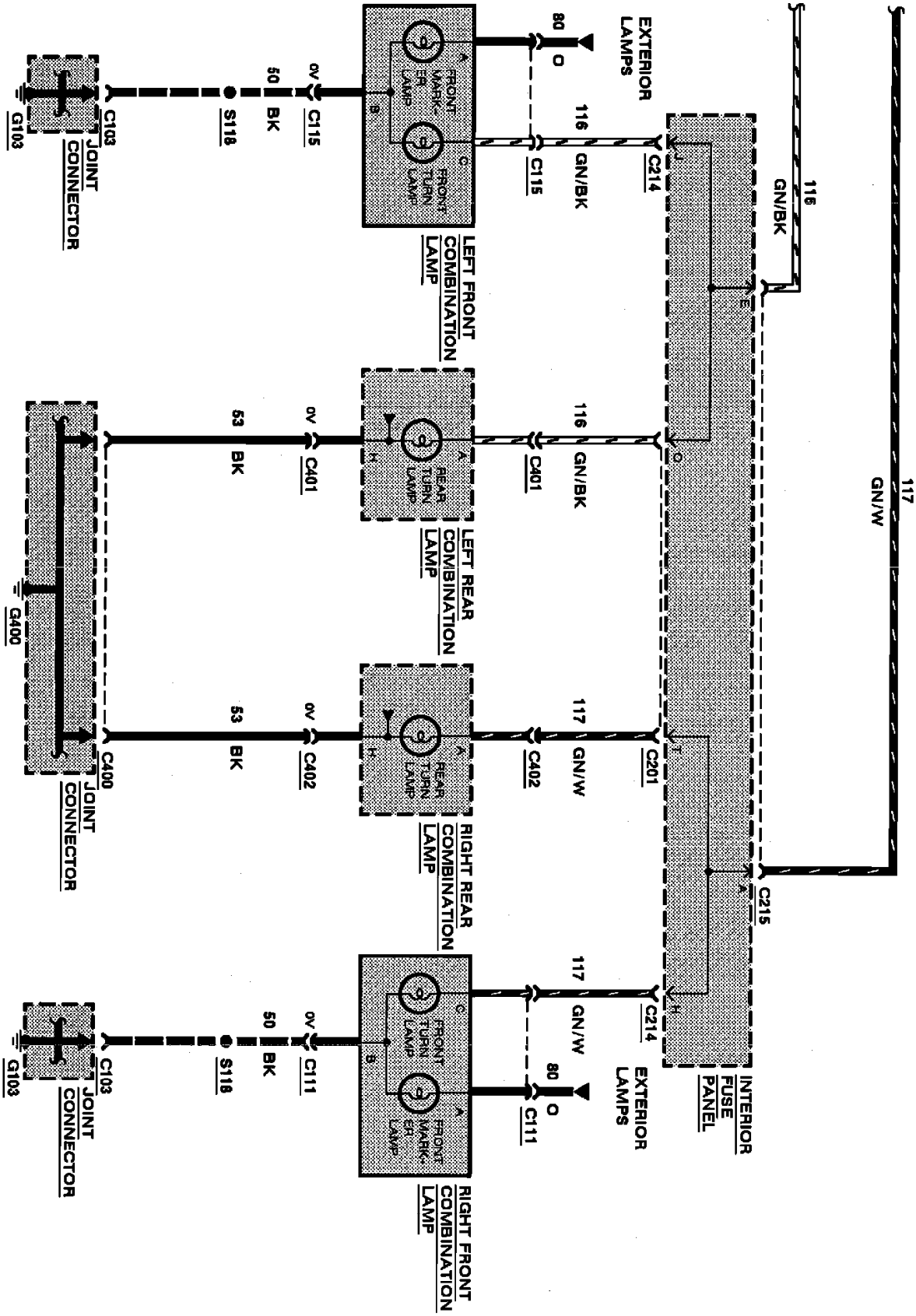

Turn/Hazard/Stop Lamps

1993 Ford Probe L4-121 2.0L DOHC VIN A MFI

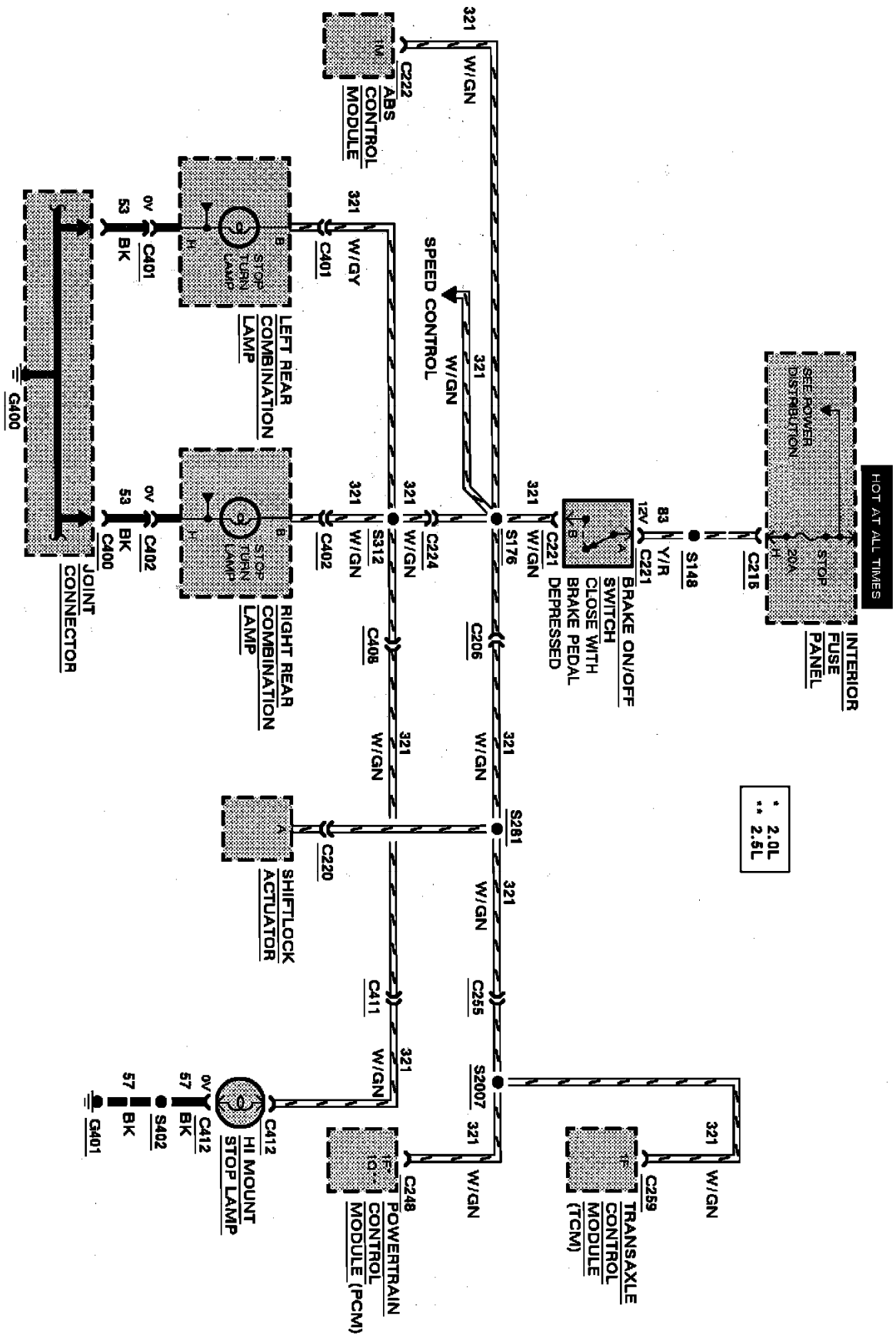

Turn/Hazard/Stop Lamps

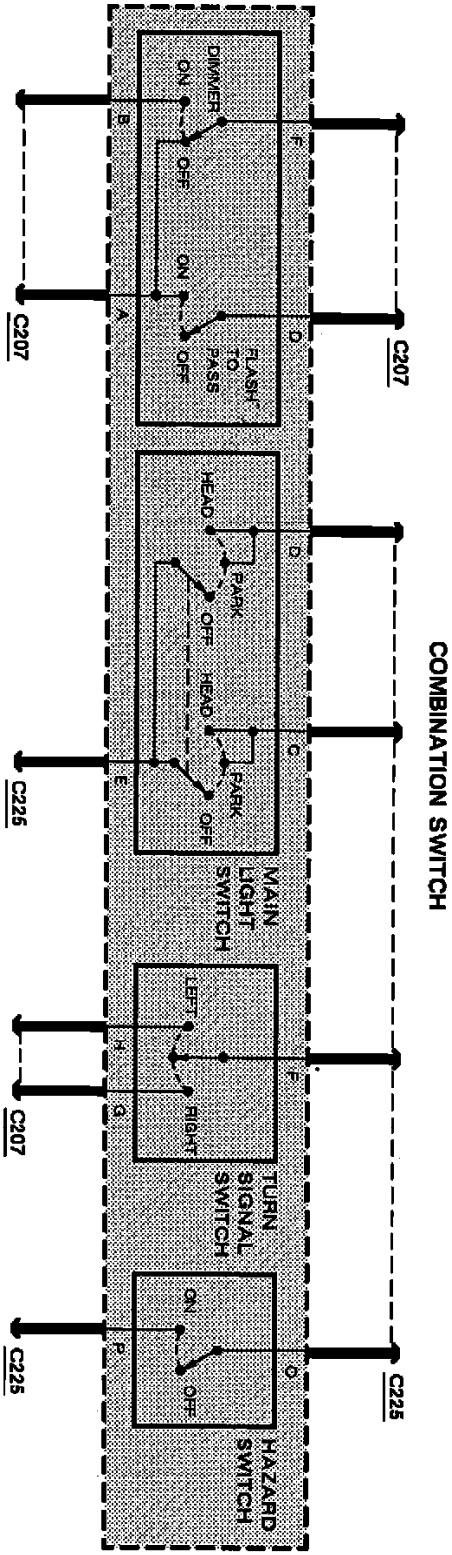
COMBINATION SWITCH
C207
C225
C207
C225
C207
C225
DIMMER
ON
OFF
ON
OFF
FLASH TO PASS
HEAD
PARK
OFF
HEAD
PARK
OFF
MAIN LIGHT SWITCH
LEFT
RIGHT
TURN SIGNAL SWITCH
ON
OFF
HAZARD SWITCH
F
B
D
A
D
C
E
F
H
G
Q
P

Schematic

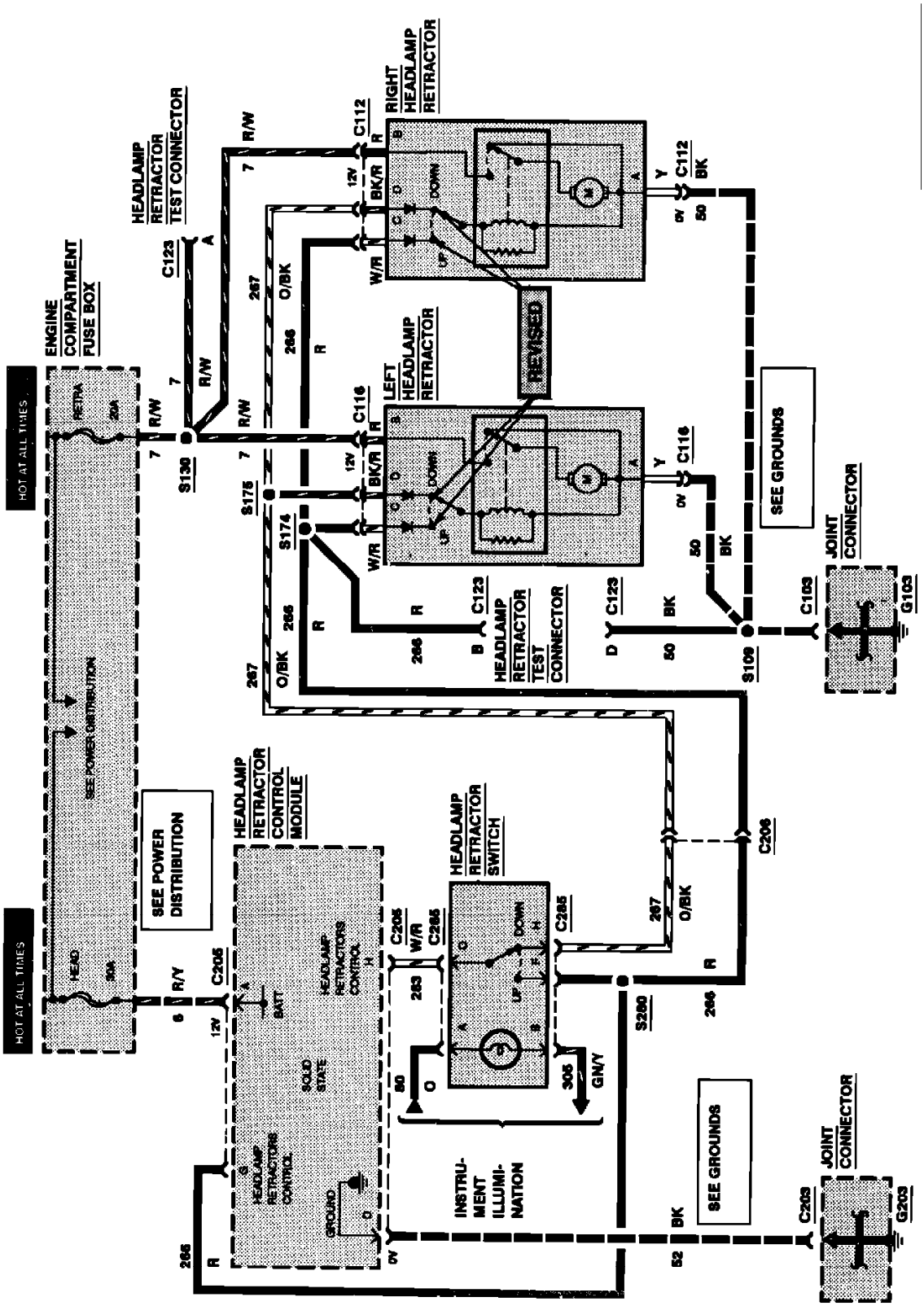
HOT AT ALL TIMES
ENGINE COMPARTMENT FUSE BOX
RETR
20A
HEAD
30A
SEE POWER DISTRIBUTION
SEE POWER DISTRIBUTION
HEADLAMP RETRACTOR TEST CONNECTOR
C123
HEADLAMP RETRACTOR CONTROL MODULE
SOLID STATE
HEADLAMP RETRACTORS CONTROL
BATT
GROUND
C206
S130
S175
S174
S280
S109
C116
C112
C205
C285
C203
C103
G103
G203
LEFT HEADLAMP RETRACTOR
RIGHT HEADLAMP RETRACTOR
REVISED
HEADLAMP RETRACTOR SWITCH
UP
DOWN
INSTRUMENT ILLUMINATION
SEE GROUNDS
SEE GROUNDS
JOINT CONNECTOR
JOINT CONNECTOR
R/W
R/Y
O/BK
W/R
BK/R
BK
GN/Y
12V
0V

Revised 8/93

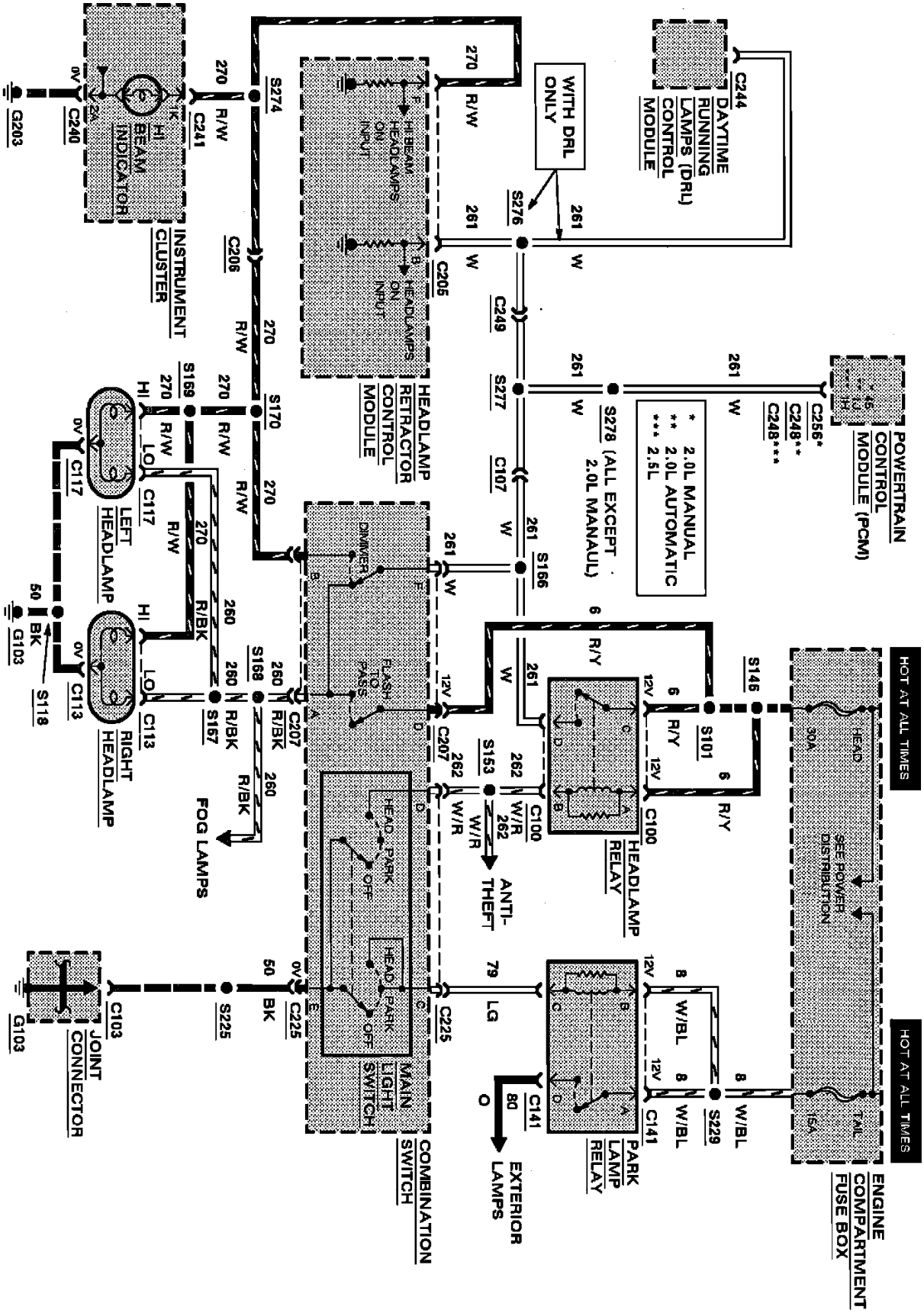
C244
DAYTIME RUNNING LAMPS (DRL) CONTROL MODULE
WITH DRL ONLY
S276
261
W
C249
S277
C107
S278 (ALL EXCEPT 2.0L MANAUL)
S166
POWERTRAIN CONTROL MODULE (PCM)
C256*
C248**
C248***
* 2.0L MANUAL
** 2.0L AUTOMATIC
*** 2.5L
270
R/W
S274
C206
C205
HEADLAMP RETRACTOR CONTROL MODULE
HI BEAM HEADLAMPS ON INPUT
HEADLAMPS ON INPUT
C241
C240
INSTRUMENT CLUSTER
HI BEAM INDICATOR
G203
S169
S170
C117
LEFT HEADLAMP
C113
RIGHT HEADLAMP
S118
G103
DIMMER
FLASH TO PASS
C207
S168
S167
R/BK
260
FOG LAMPS
6
R/Y
S146
S101
C100
HEADLAMP RELAY
12V
W/R
262
S153
ANTI-THEFT
HOT AT ALL TIMES
HEAD
30A
SEE POWER DISTRIBUTION
ENGINE COMPARTMENT FUSE BOX
TAIL
15A
W/BL
8
S229
C141
PARK LAMP RELAY
W/R
C225
79
LG
C141
80
O
EXTERIOR LAMPS
HEAD
PARK
OFF
MAIN LIGHT SWITCH
COMBINATION SWITCH
0V
50
BK
S225
C103
JOINT CONNECTOR
G103

Headlamps

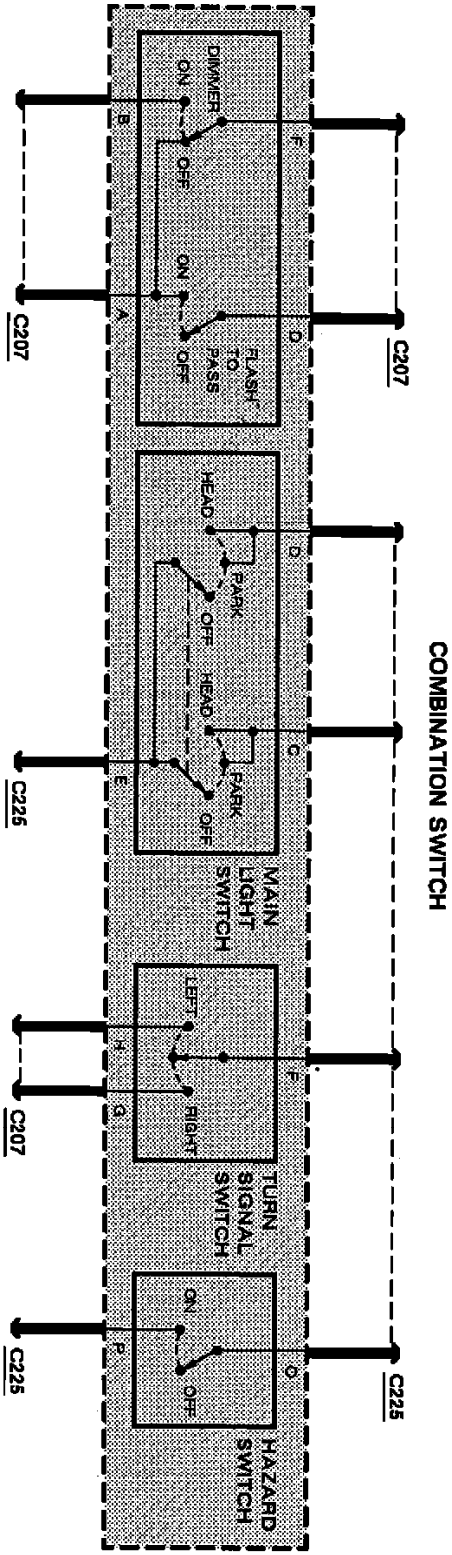
COMBINATION SWITCH
C207
C225
C207
C225
C207
C225
DIMMER
ON
OFF
FLASH TO PASS
ON
OFF
HEAD
PARK
OFF
HEAD
PARK
OFF
MAIN LIGHT SWITCH
LEFT
RIGHT
TURN SIGNAL SWITCH
ON
OFF
HAZARD SWITCH
F
B
D
A
D
C
E
F
H
G
Q
P

Schematic

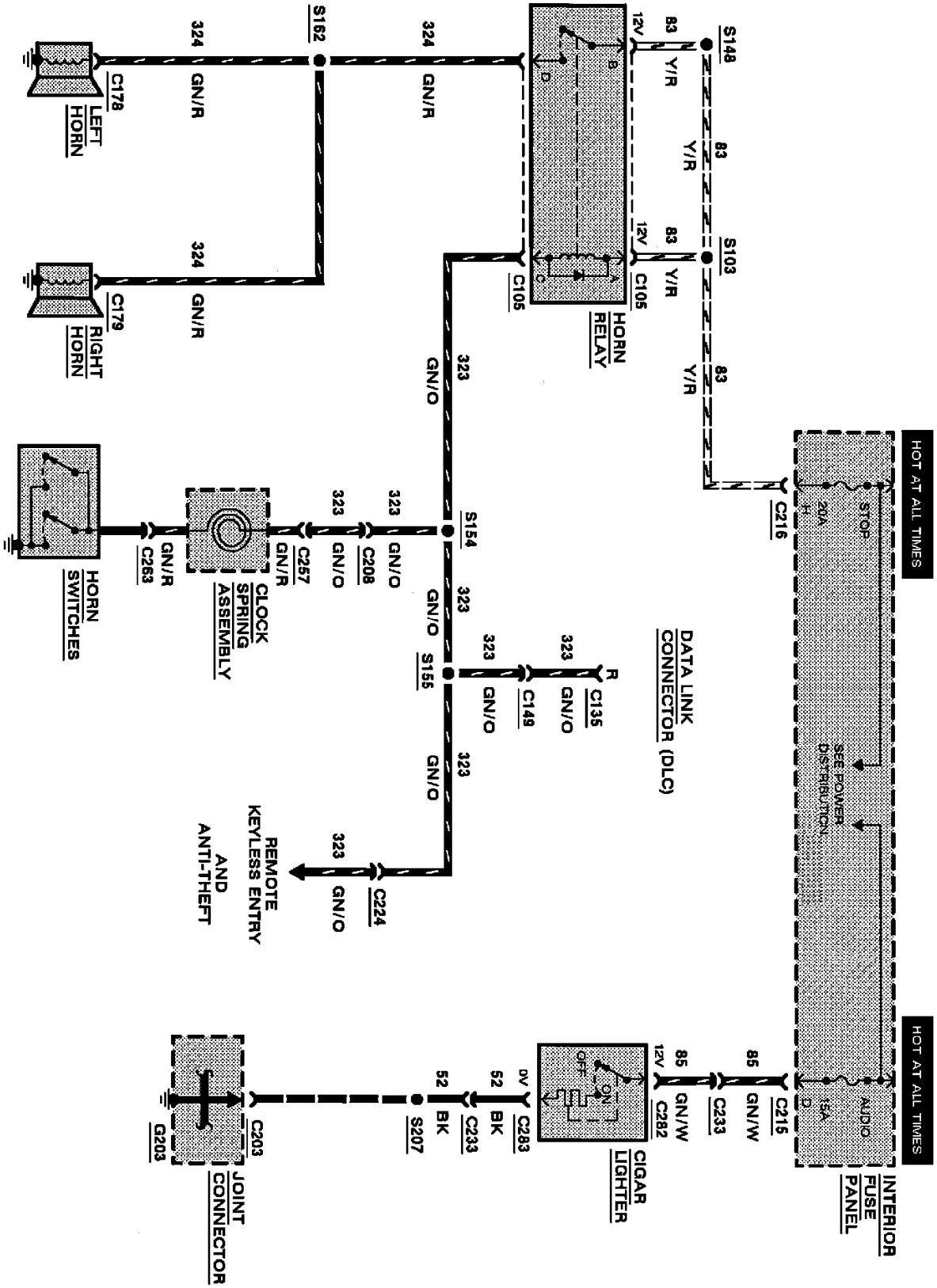

Horn/Cigar Lighter

1993 Ford Probe L4-121 2.0L DOHC VIN A MFI

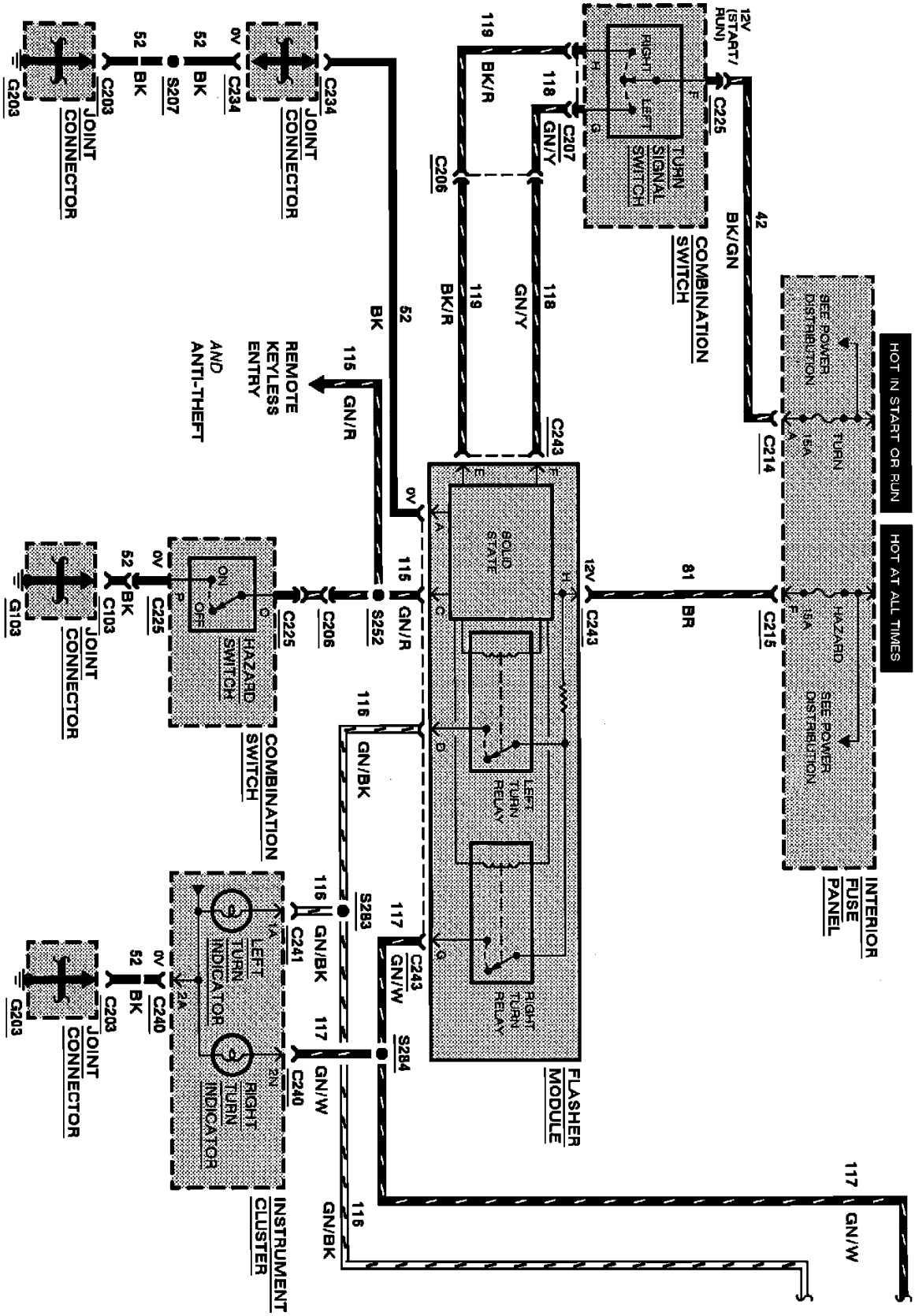

Turn/Hazard/Stop Lamps

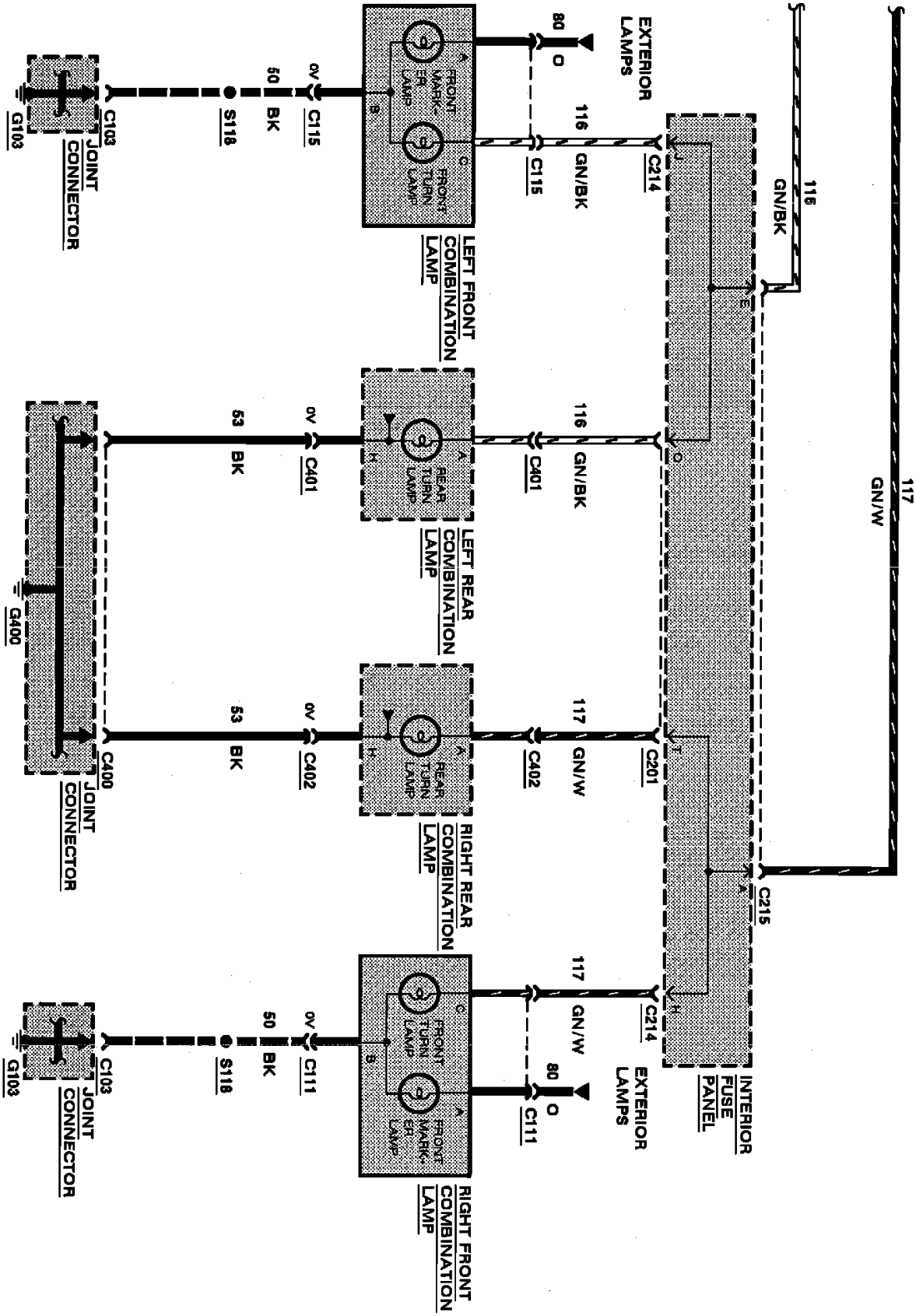

Turn/Hazard/Stop Lamps

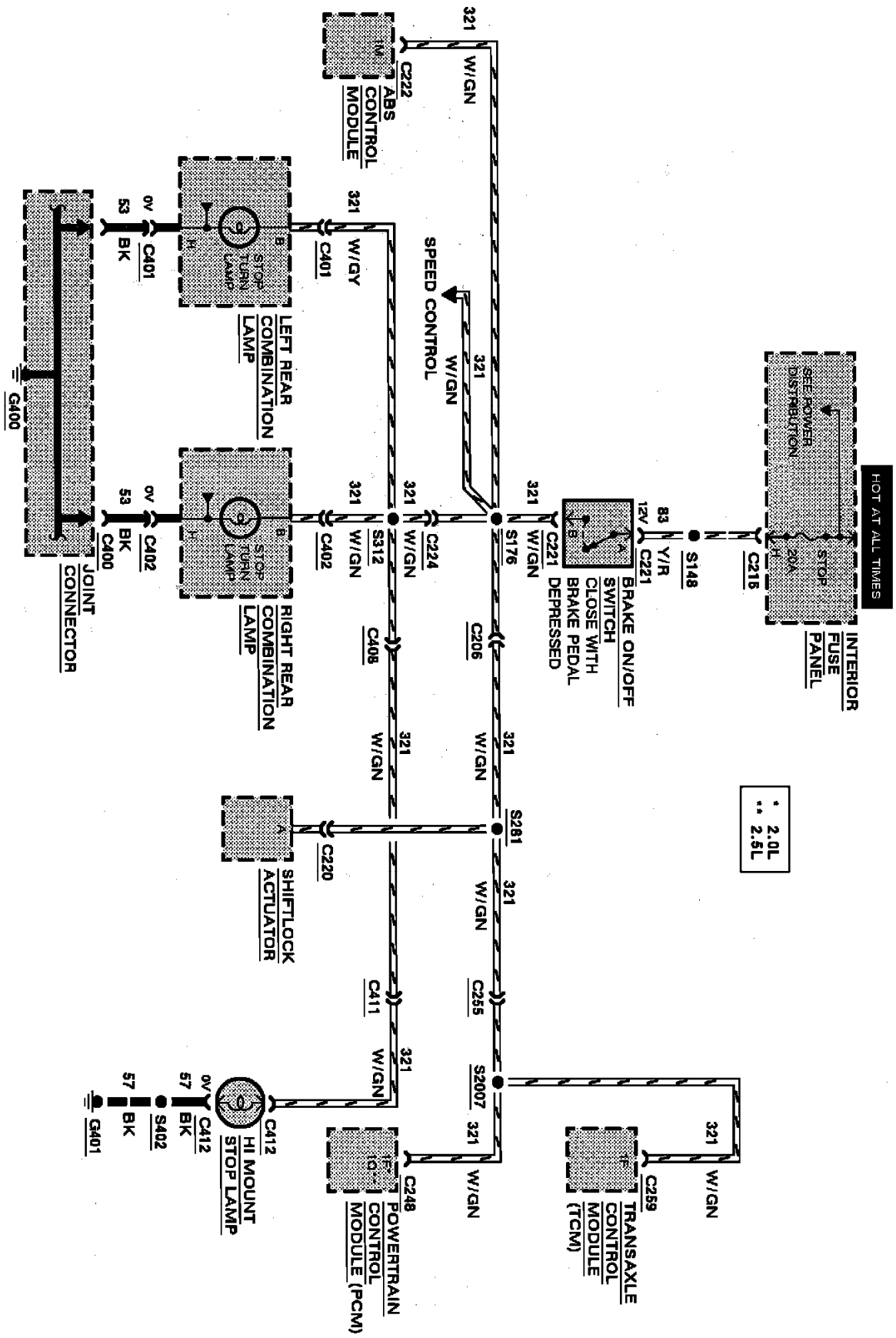

Turn/Hazard/Stop Lamps

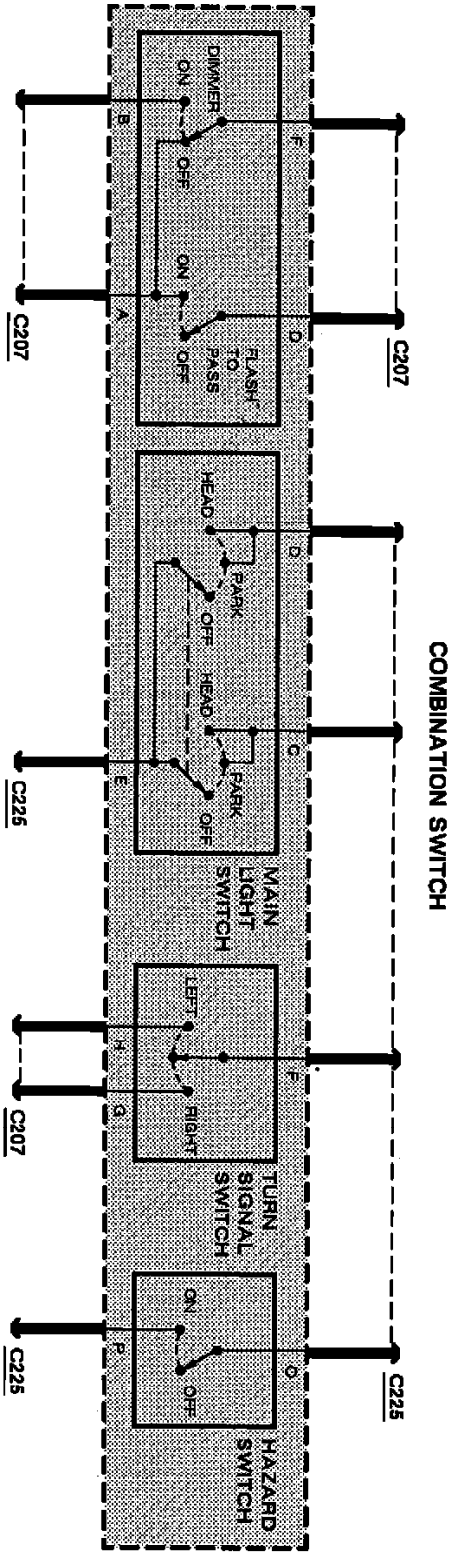
COMBINATION SWITCH
C207
C225
C207
C225
C207
C225
DIMMER
ON
OFF
FLASH TO PASS
ON
OFF
HEAD
PARK
OFF
HEAD
PARK
OFF
MAIN LIGHT SWITCH
LEFT
RIGHT
TURN SIGNAL SWITCH
ON
OFF
HAZARD SWITCH
F
B
D
A
D
C
E
F
H
G
Q
P

Schematic

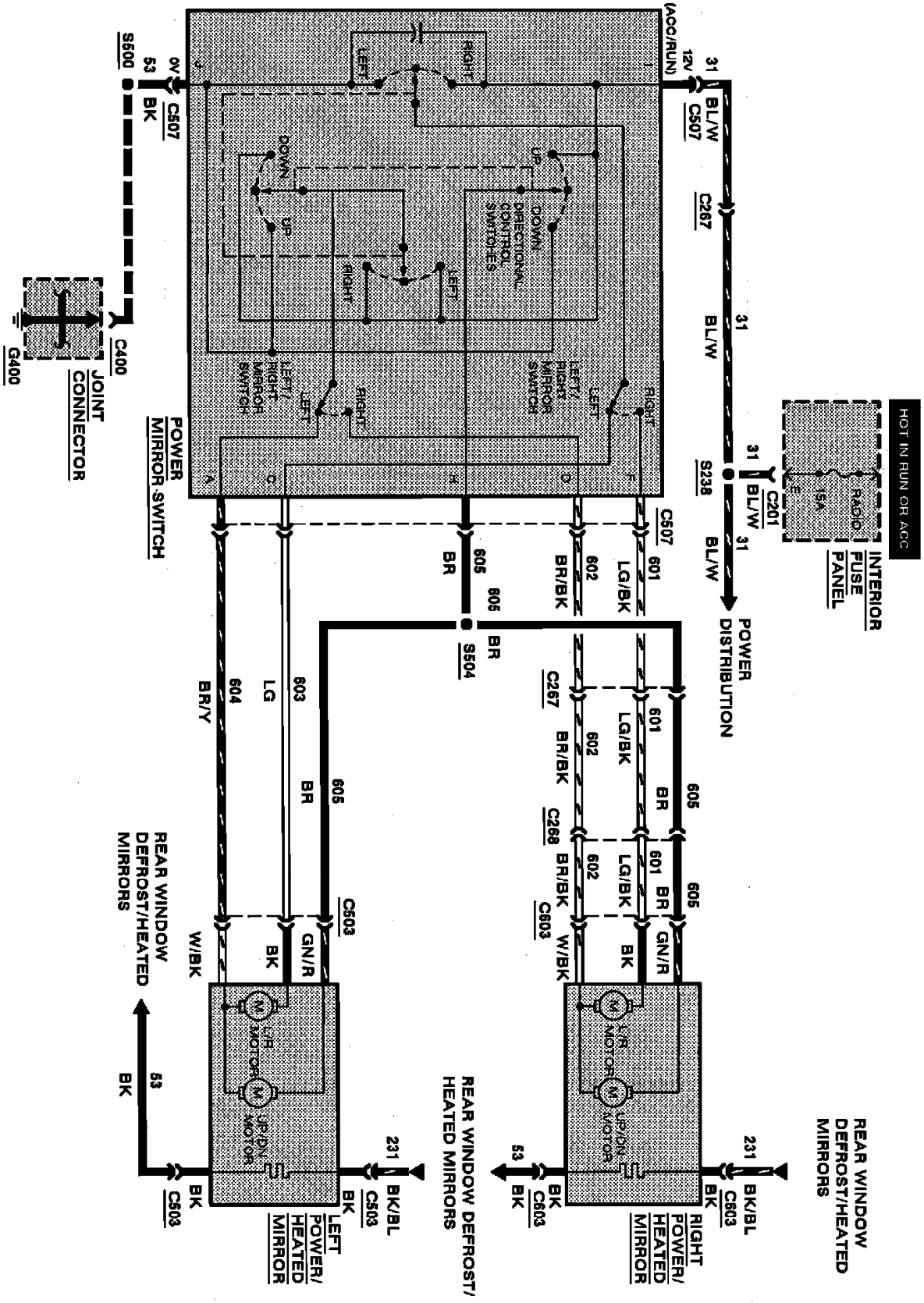

Power Mirrors

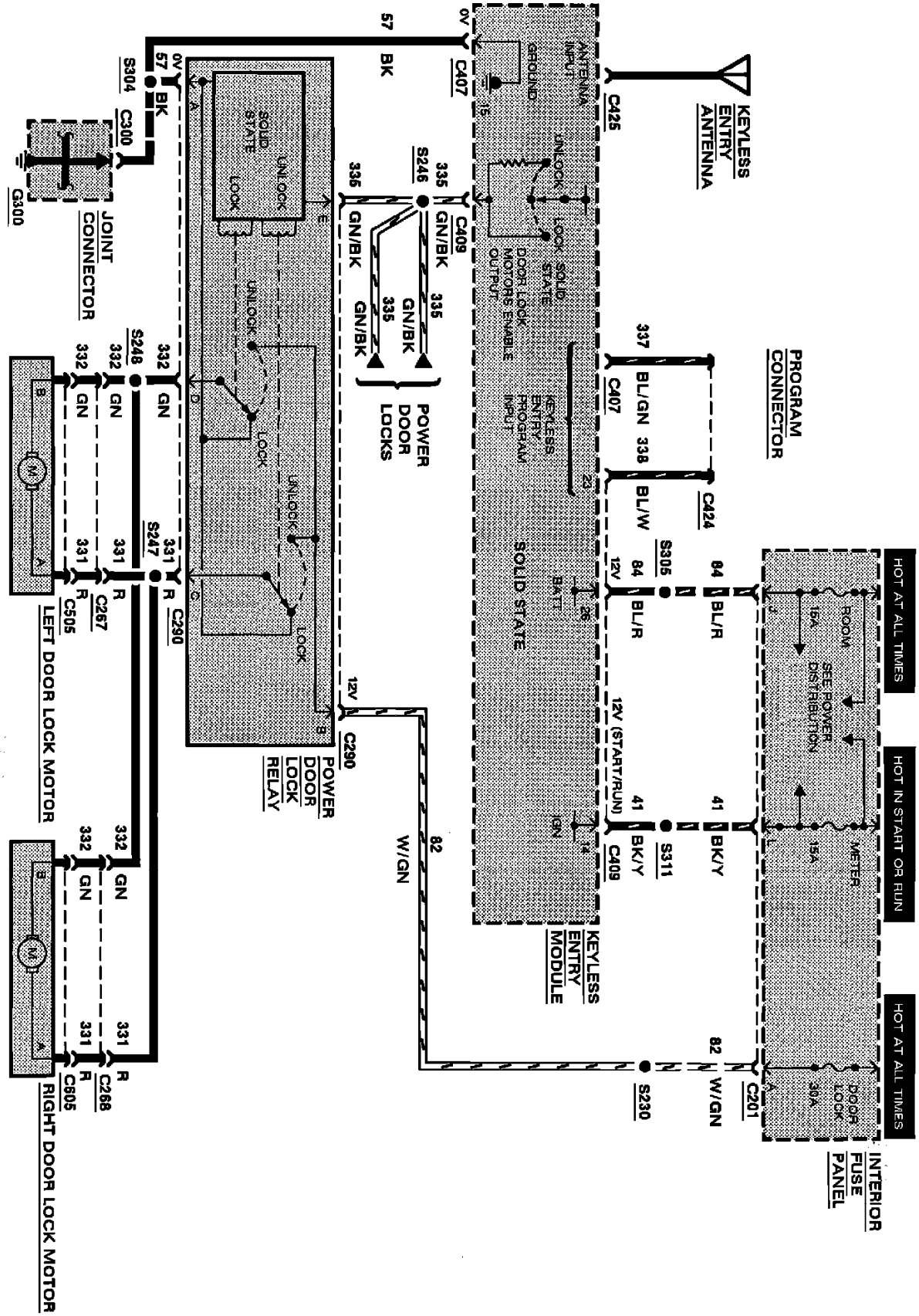

Remote Keyless Entry

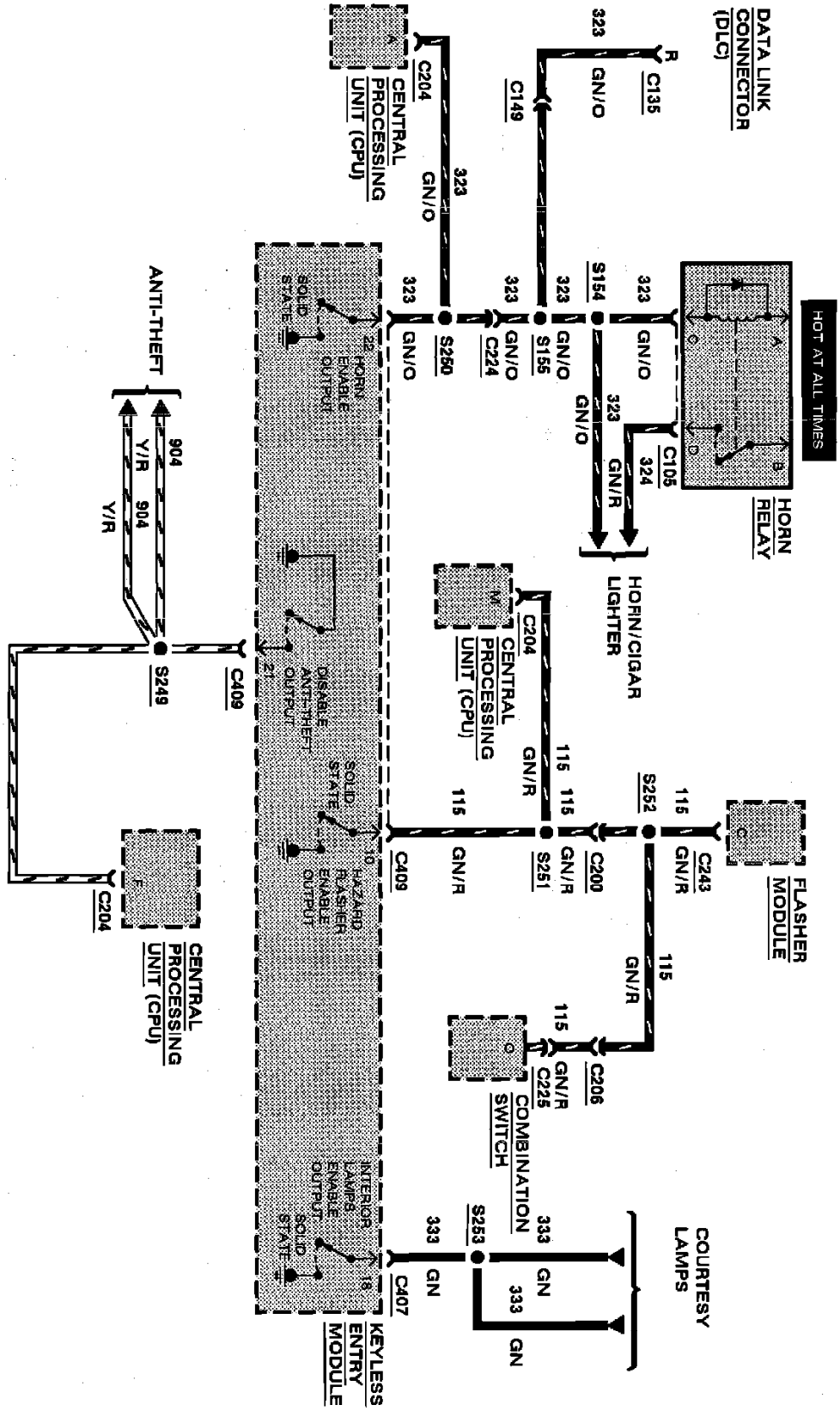

Remote Keyless Entry

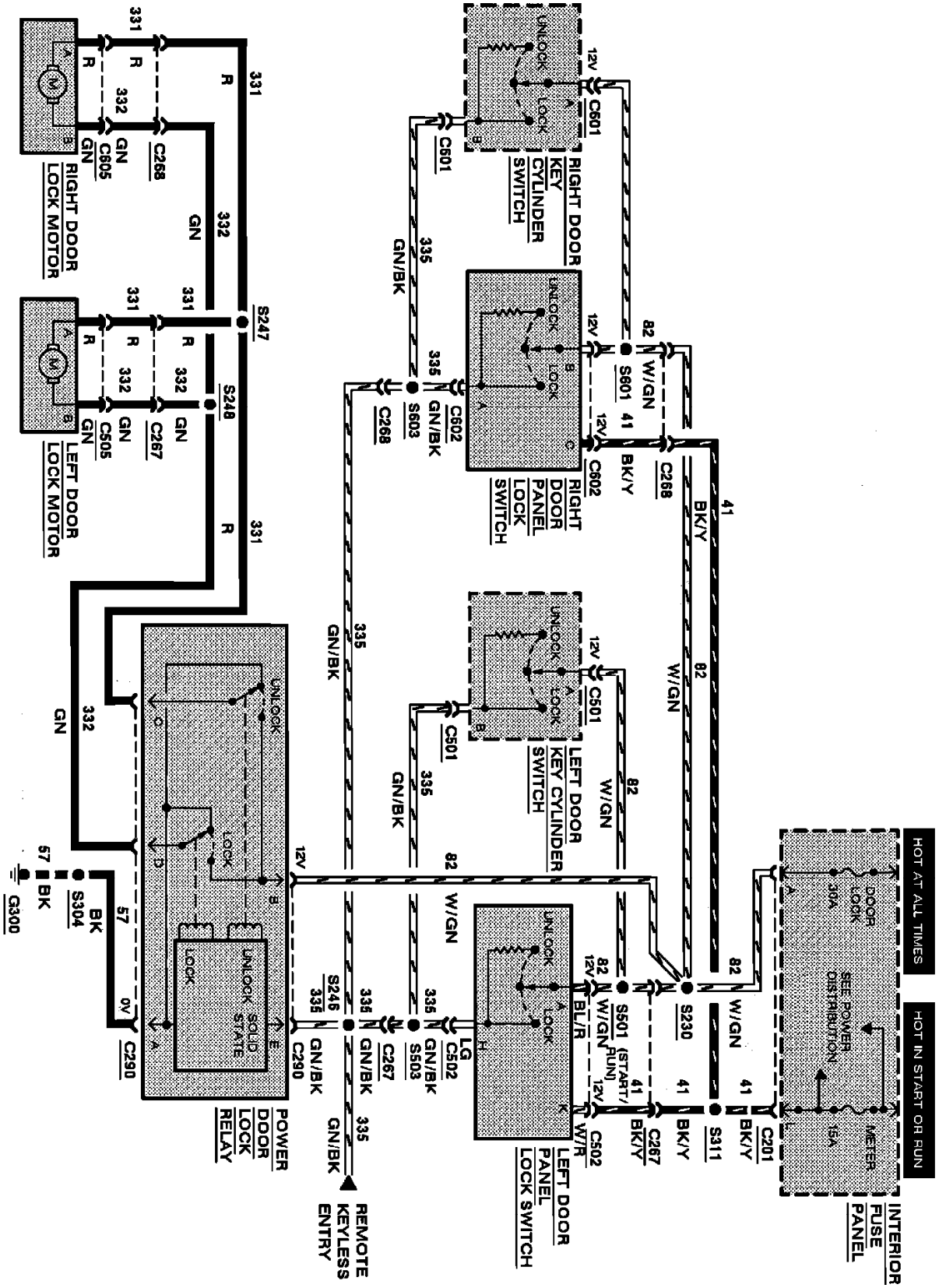

Power Door Locks

Automatic Transaxle

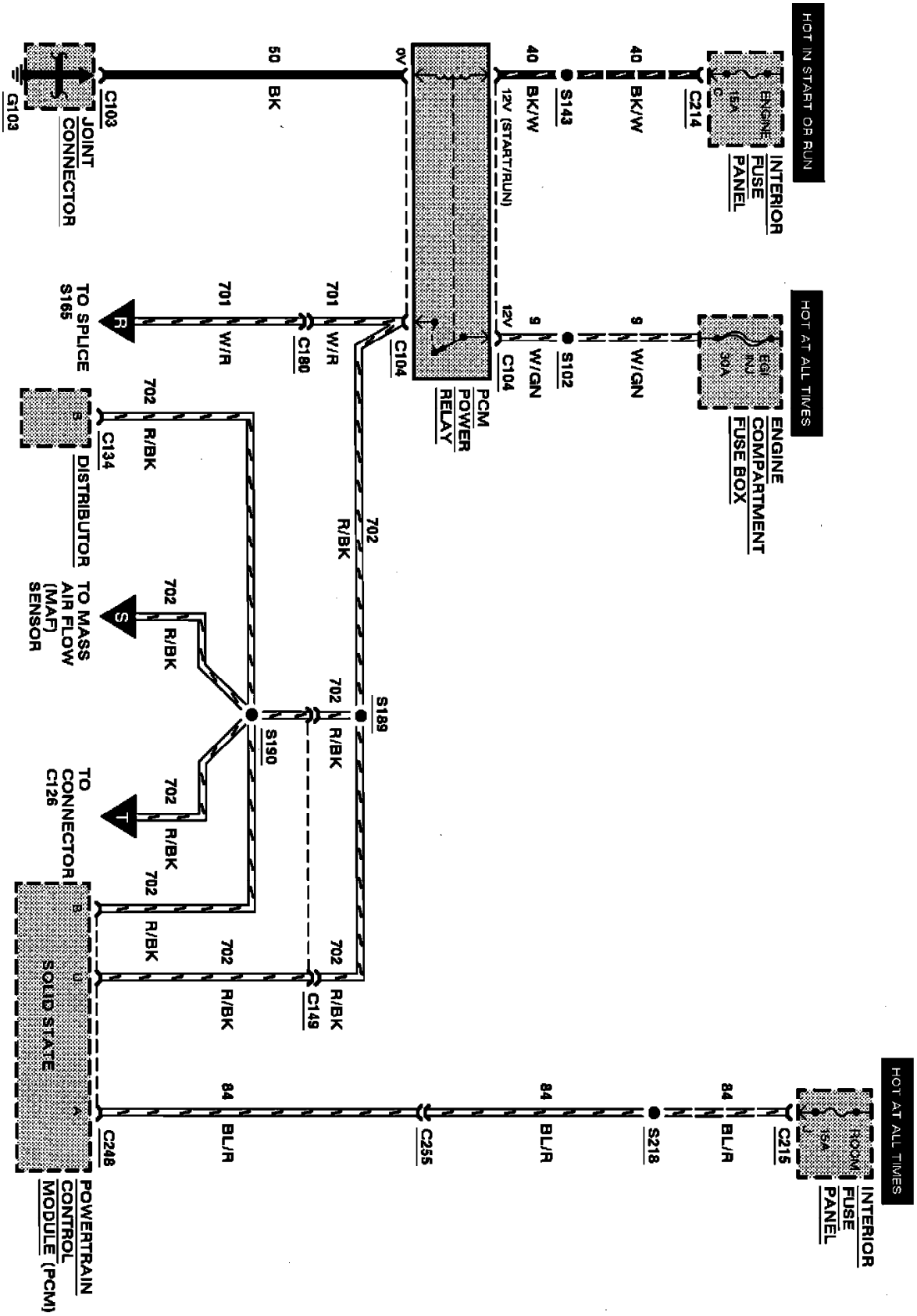

Electronic Engine Control

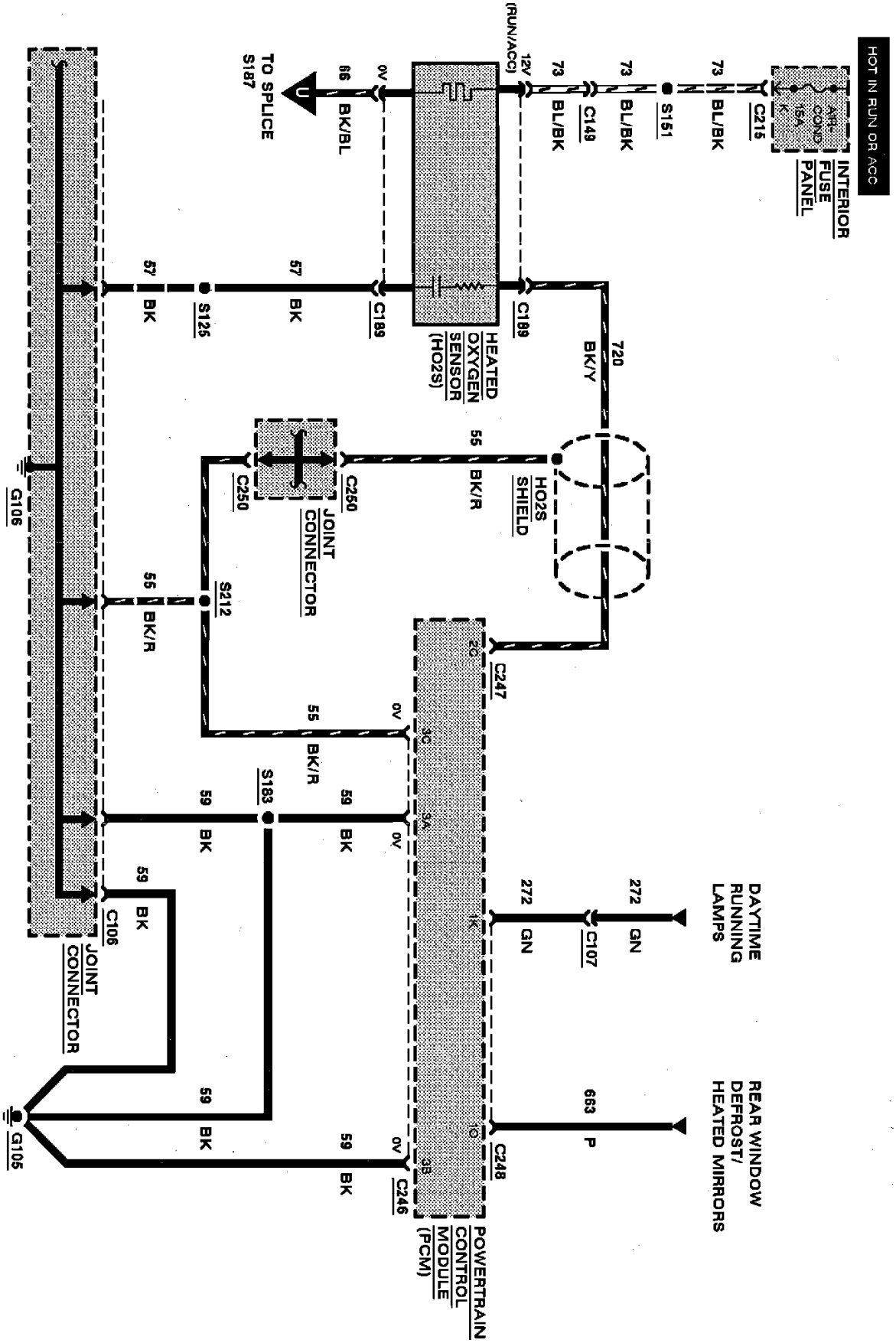

Electronic Engine Control

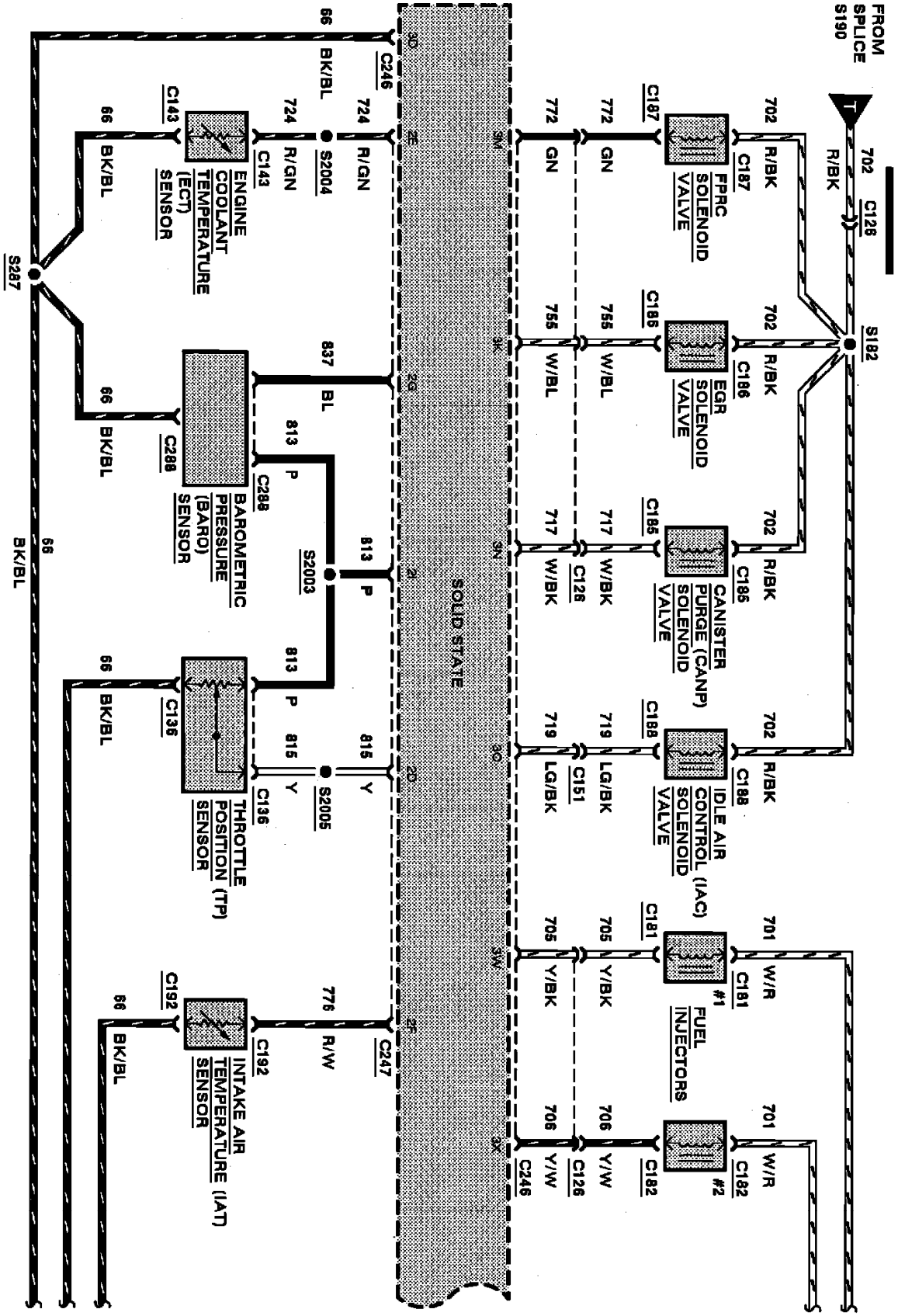

Electronic Engine Control

1993 Ford Probe L4-121 2.0L DOHC VIN A MFI

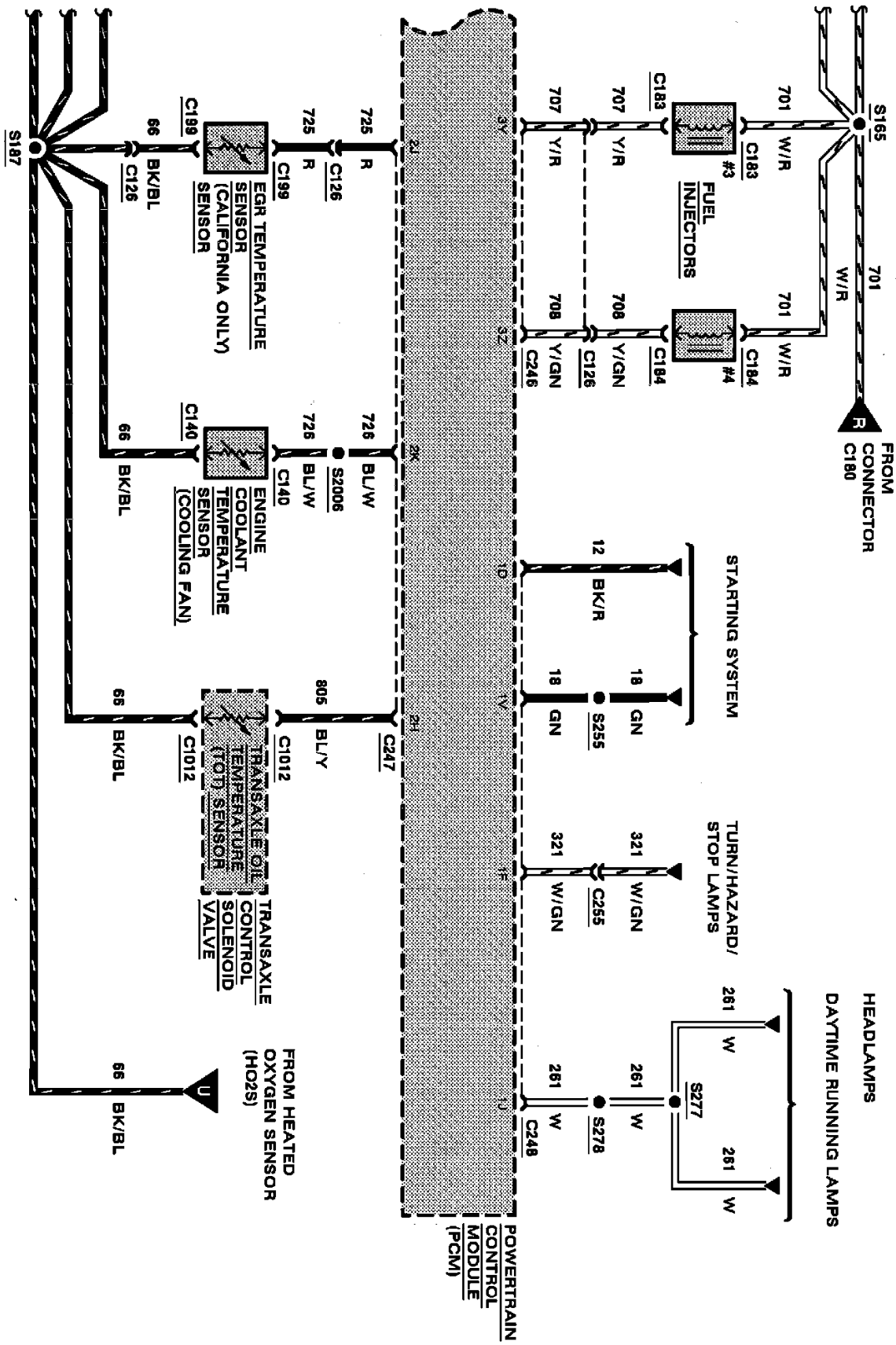

Electronic Engine Control

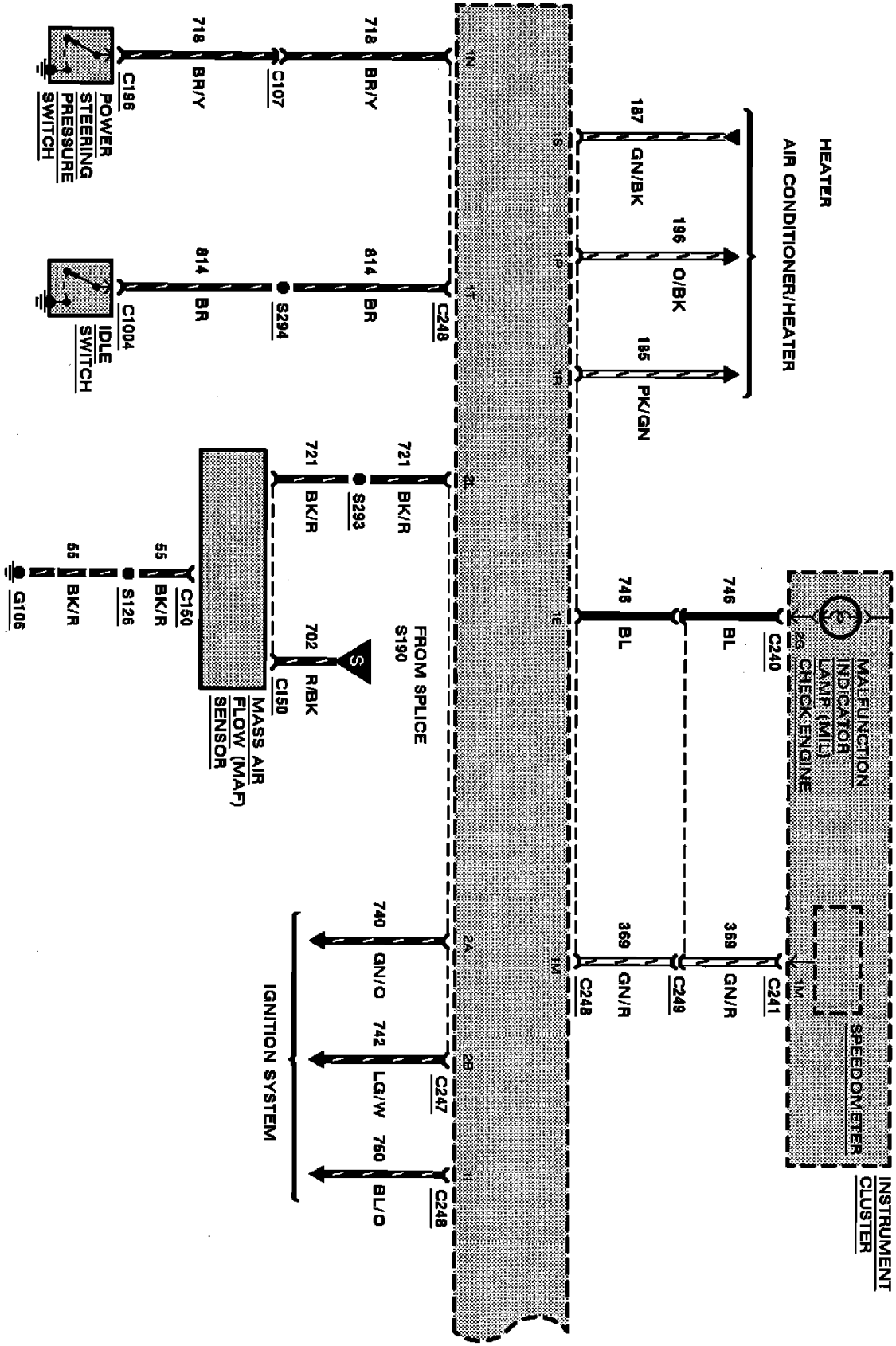

Electronic Engine Control

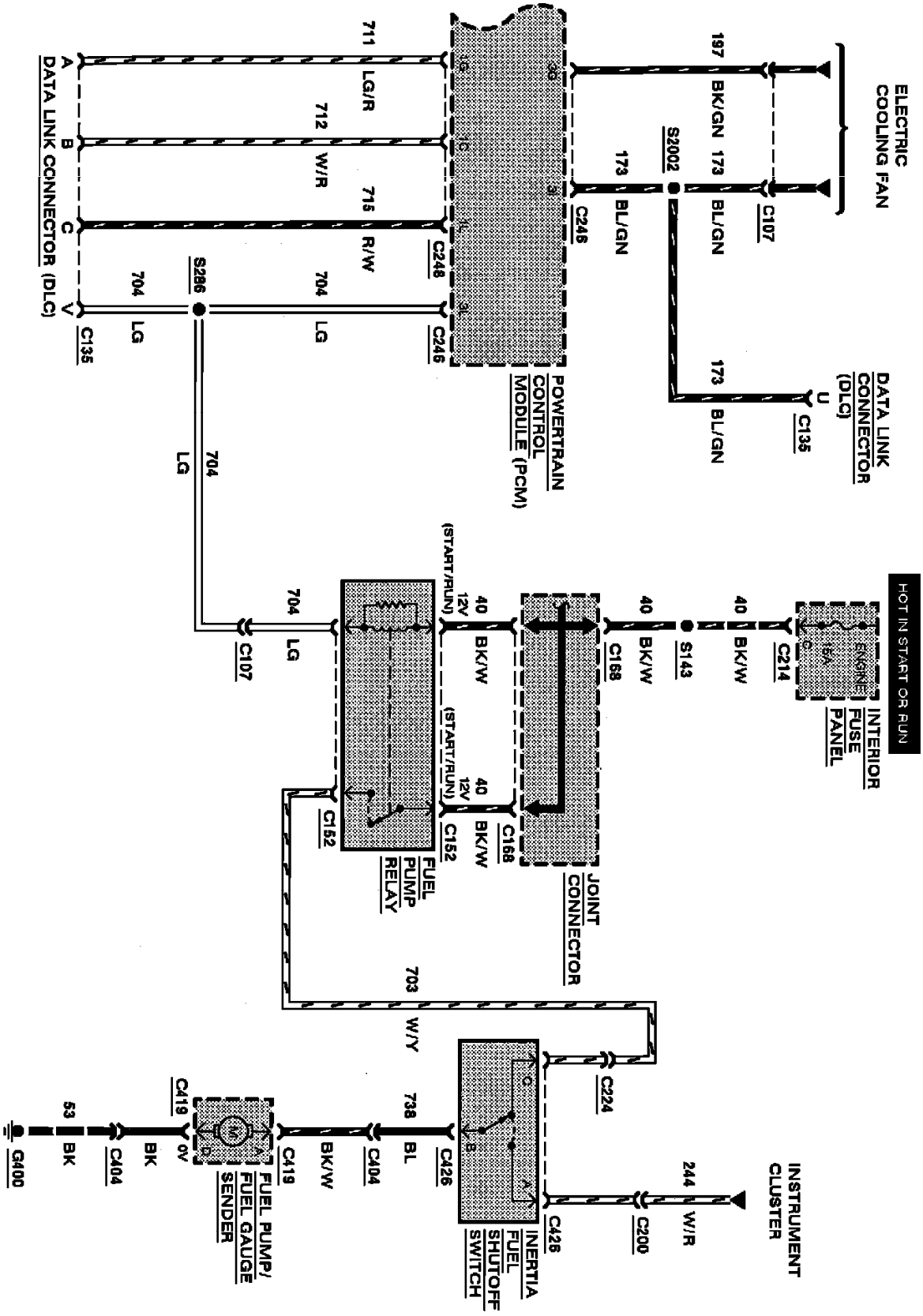

Electronic Engine Control

Manual Transaxle

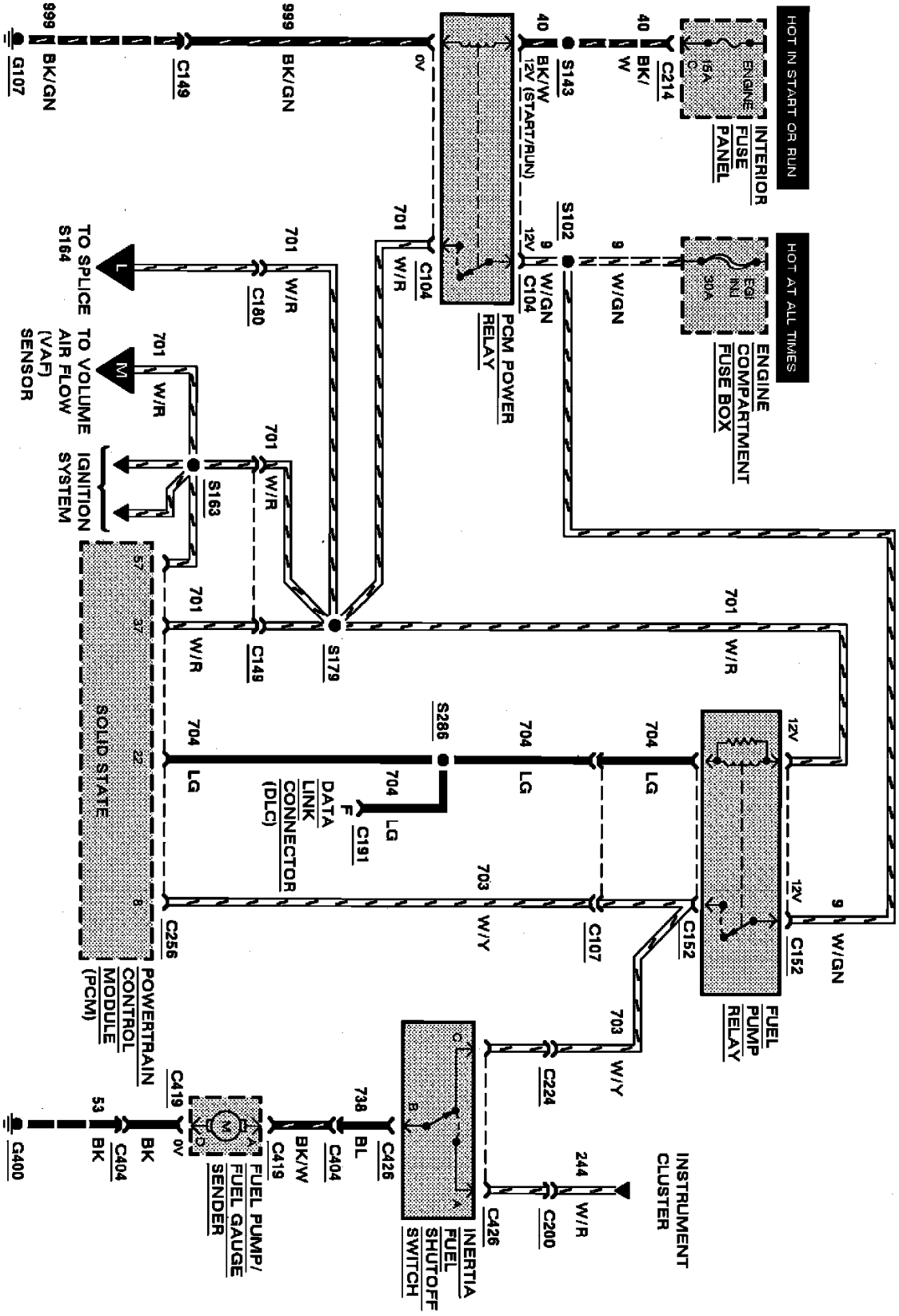

Electronic Engine Control

1993 Ford Probe L4-121 2.0L DOHC VIN A MFI

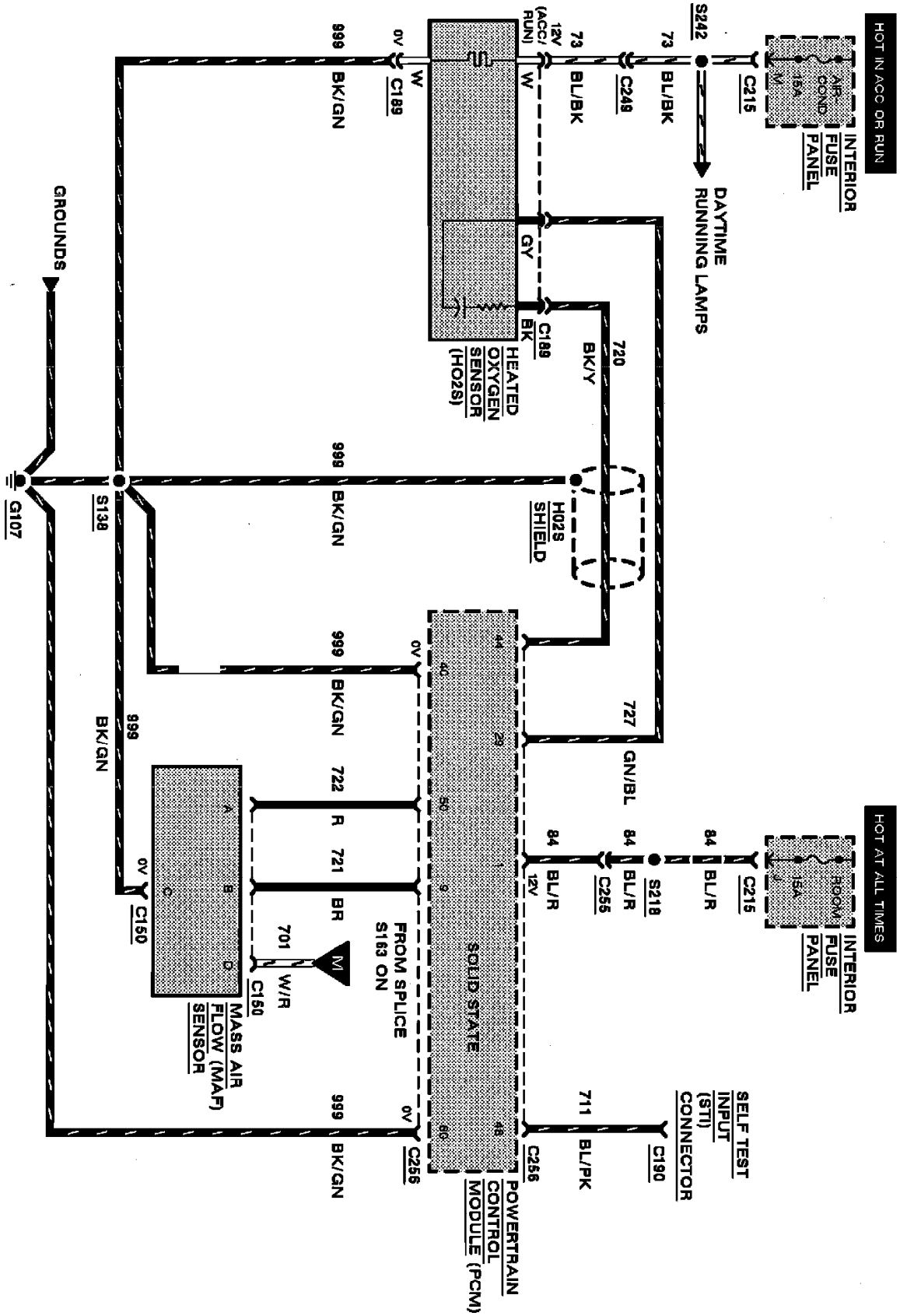

Electronic Engine Control

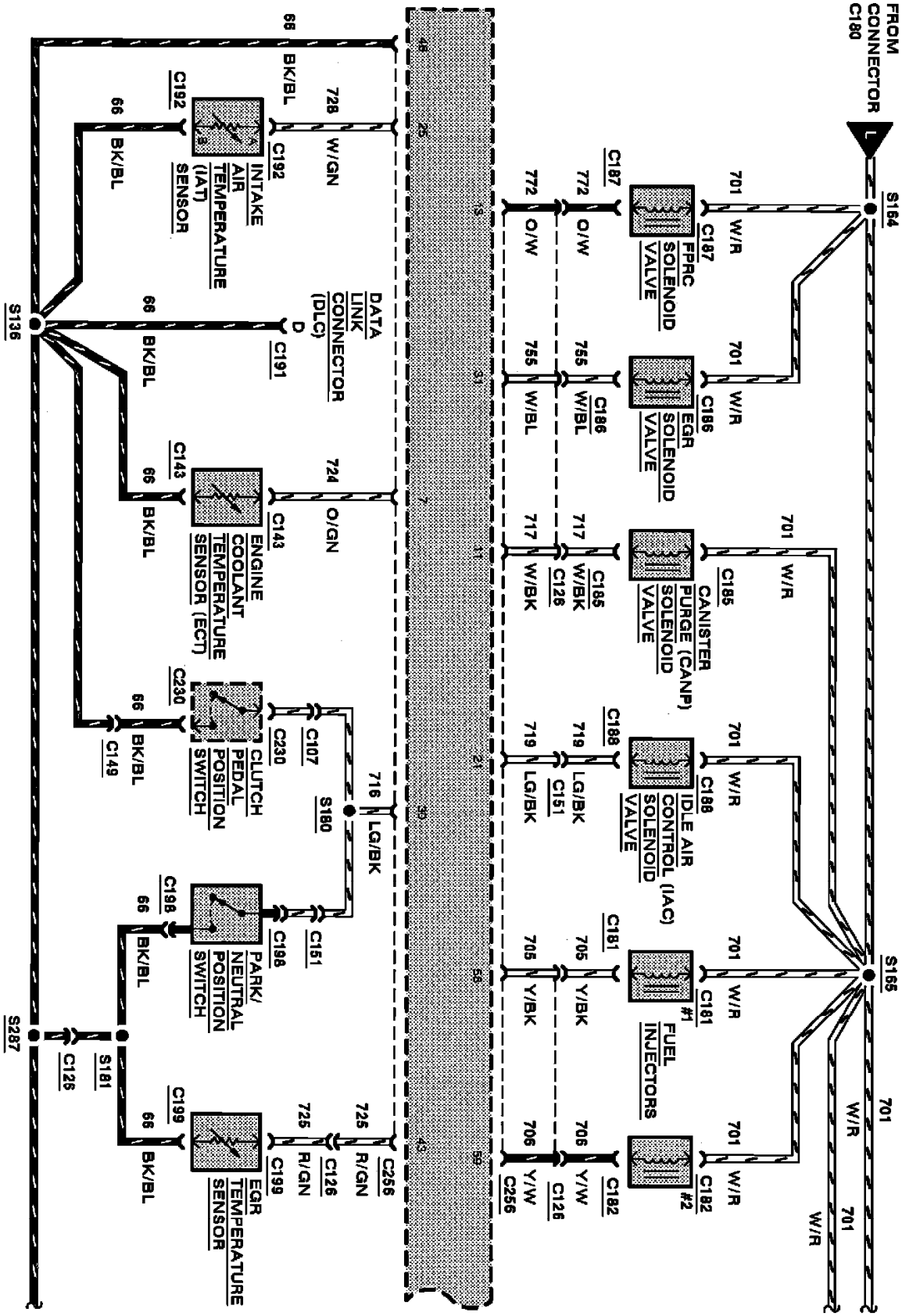

Electronic Engine Control

1993 Ford Probe L4-121 2.0L DOHC VIN A MFI

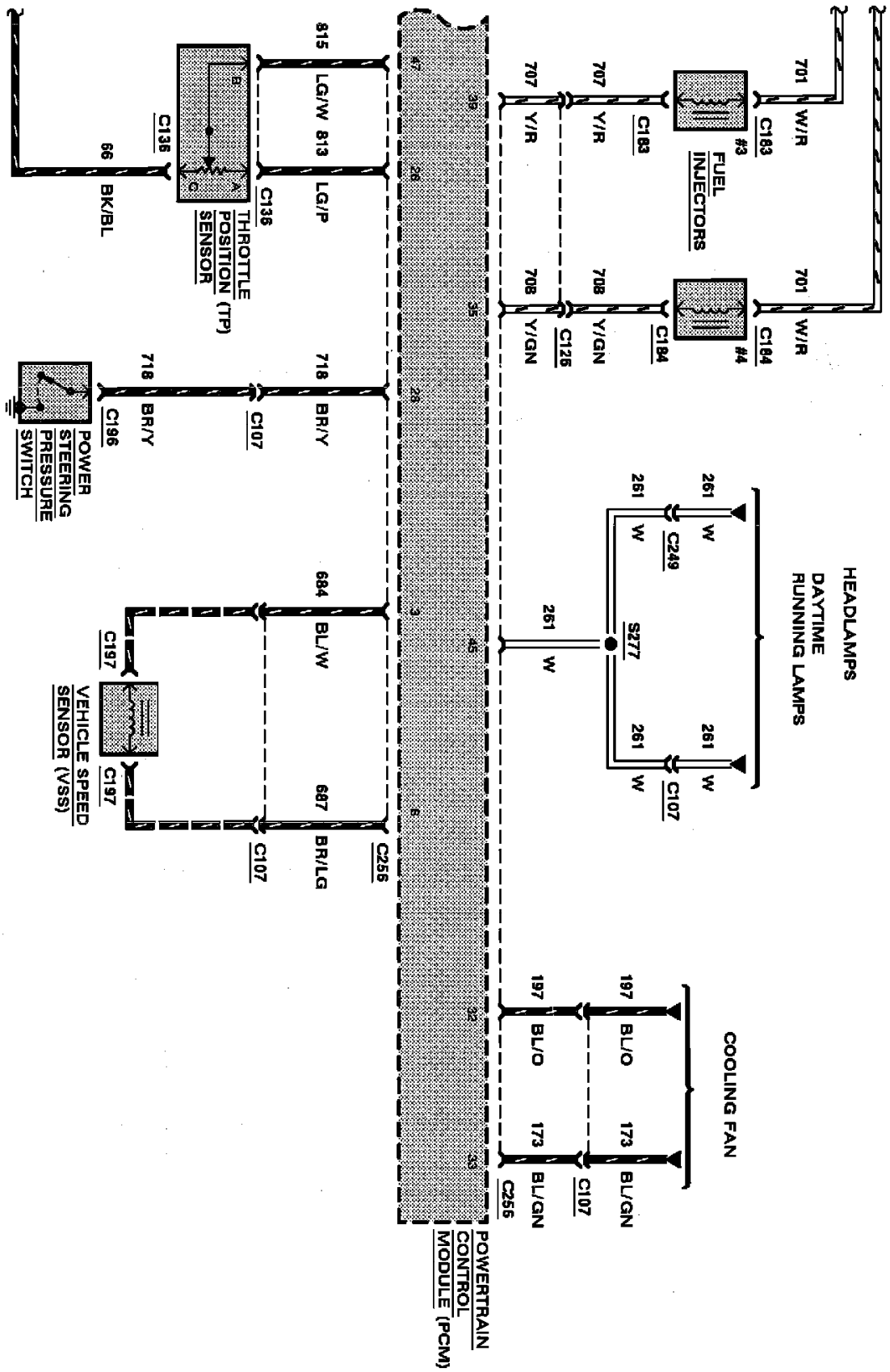

Electronic Engine Control

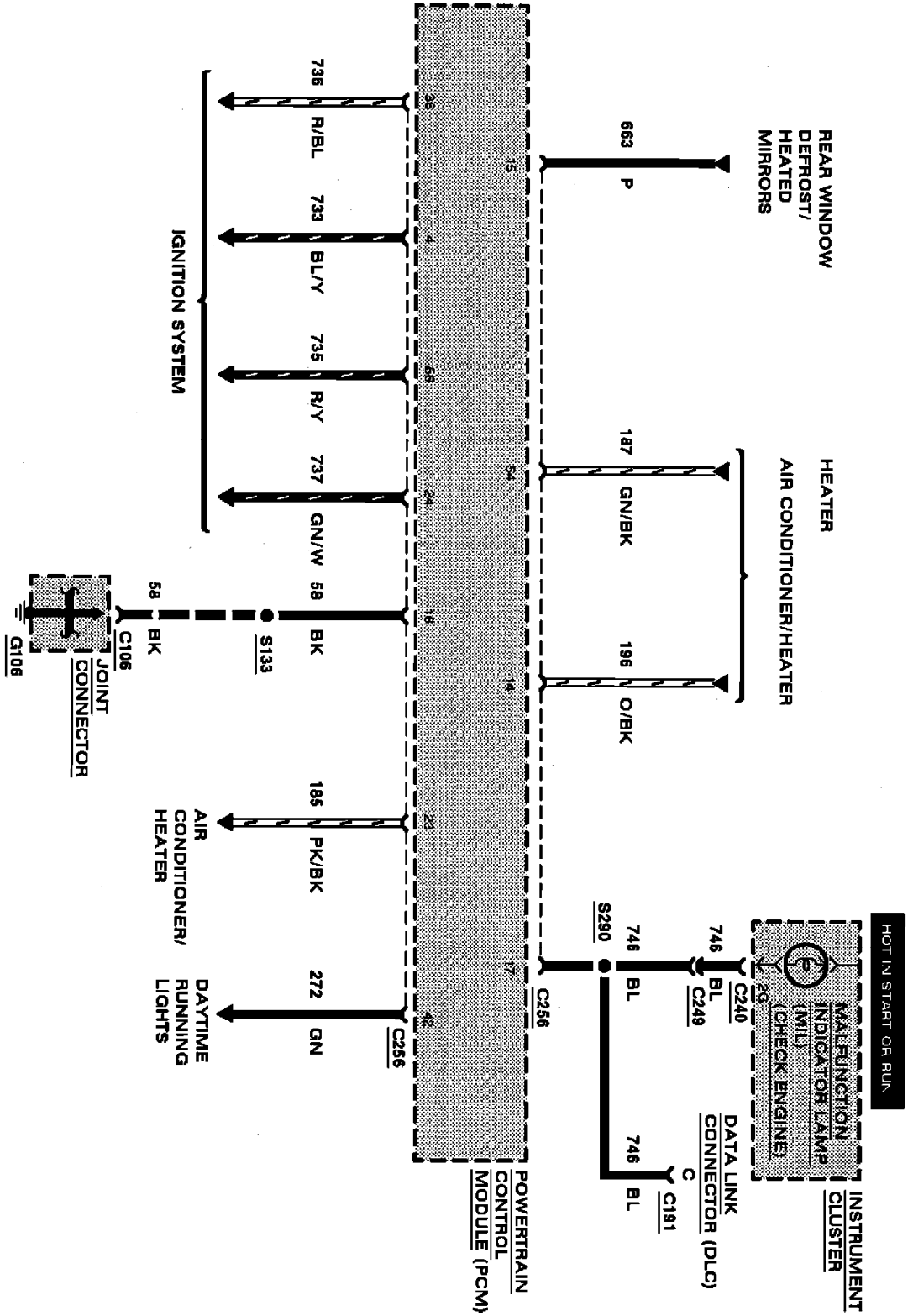

Electronic Engine Control

Powertrain Diagrams

For information regarding diagrams for this system, please refer to Powertrain Management diagrams. See: Powertrain Management/Diagrams

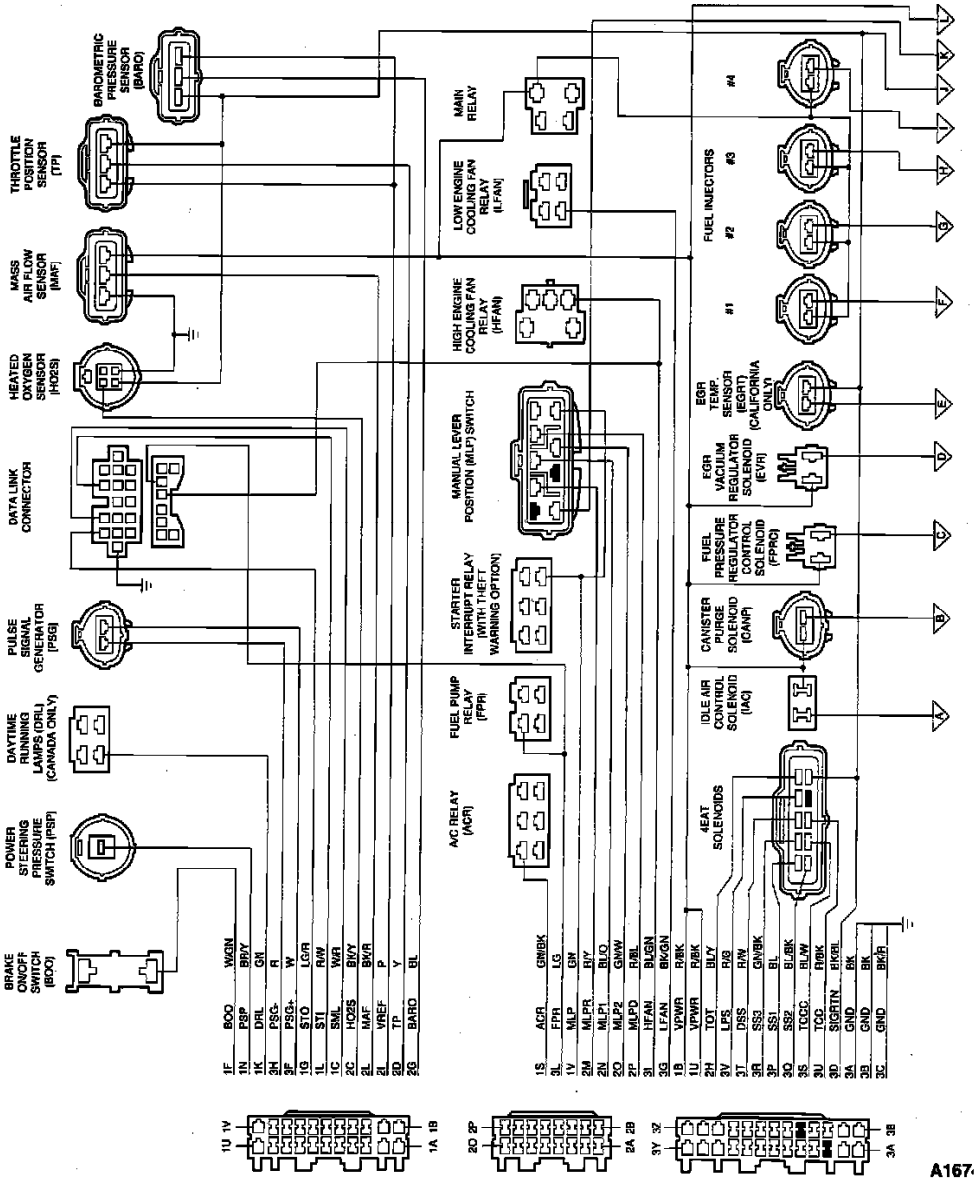

PCM Wiring Schematic (Part 1)

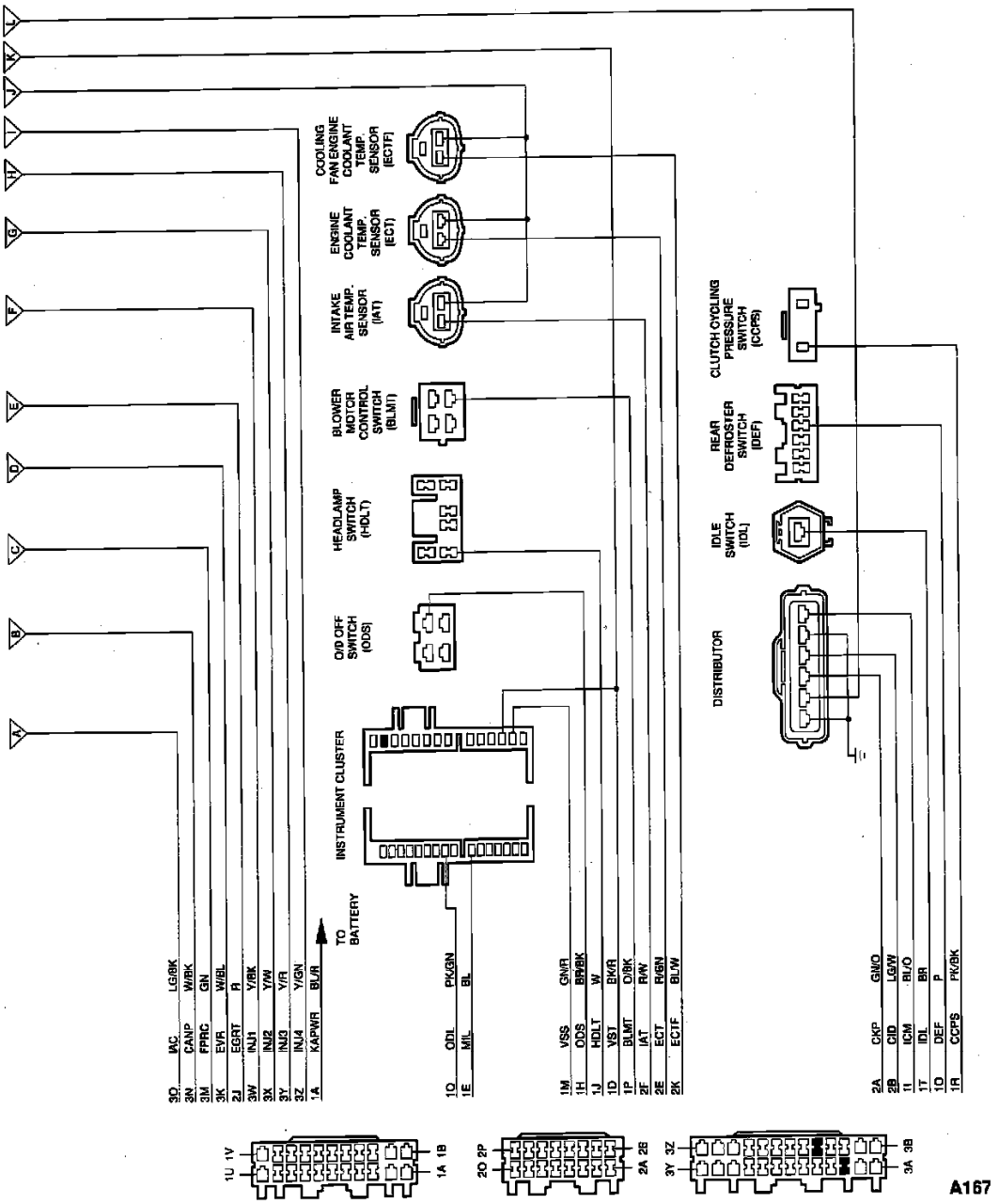

PCM Wiring Schematic (Part 2)

A/C Signal

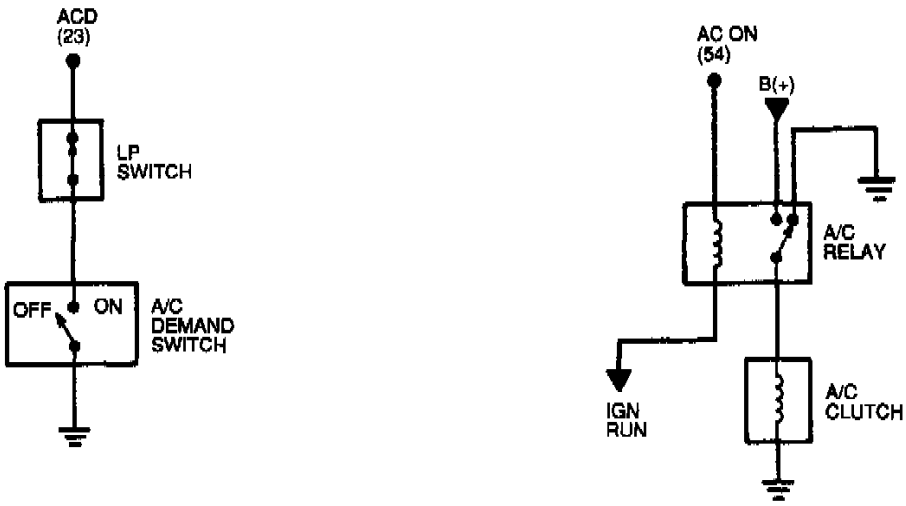

A/C Circuit Schematic

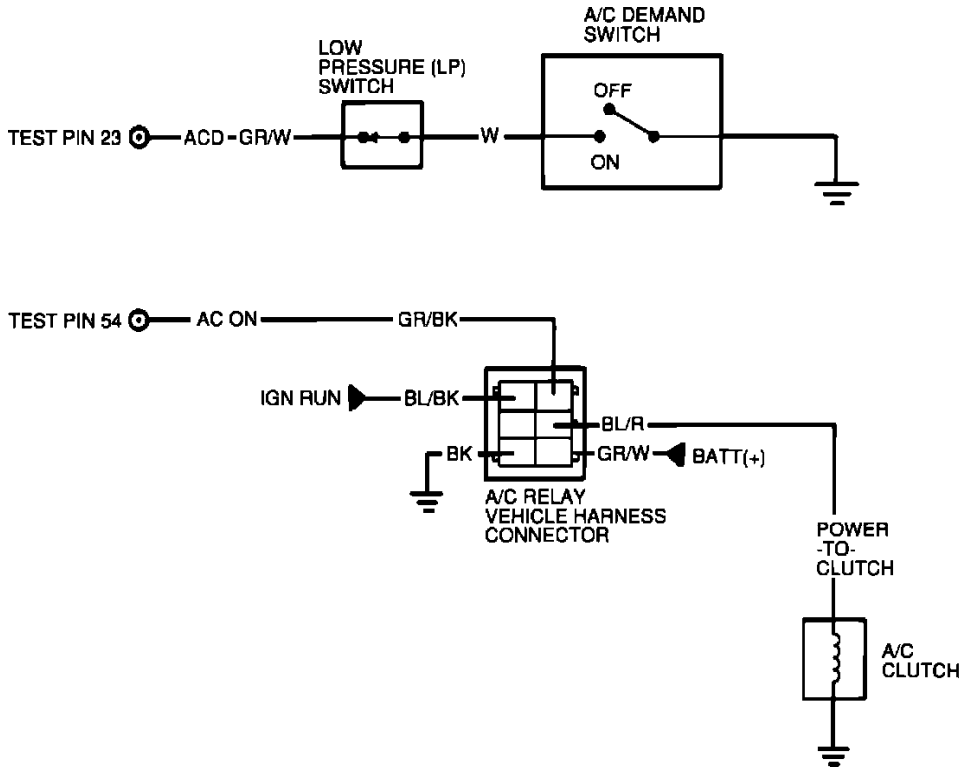

A/C Circuit Diagram

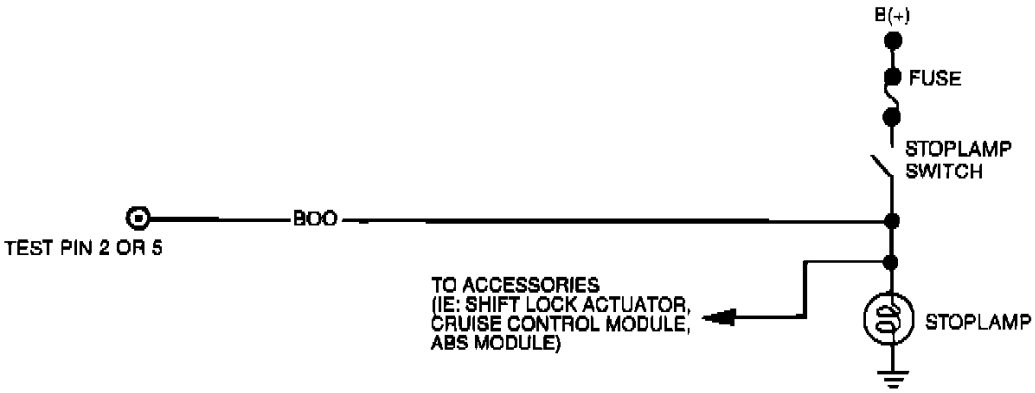

Brake On/Off (BOO) Signal

Camshaft Position Sensor

For information regarding diagrams for this system, please refer to Powertrain Management diagrams. See: Powertrain Management/Diagrams

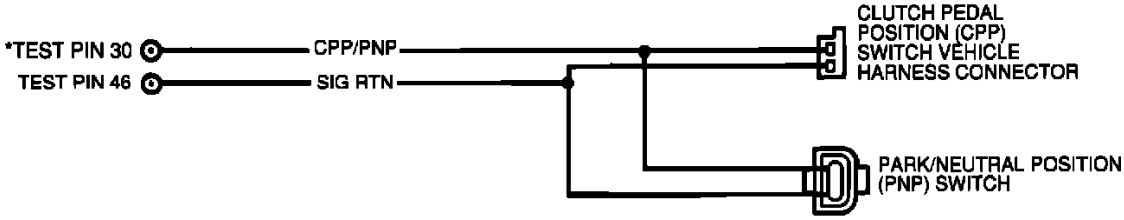

Schematic Diagram

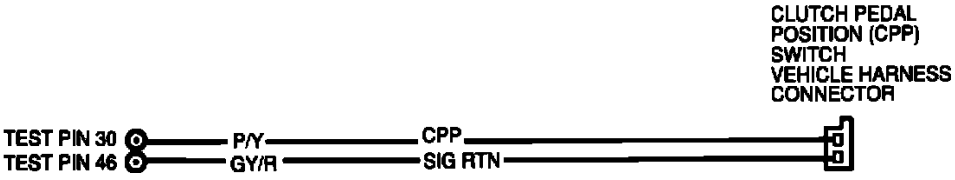

CPP Diagram

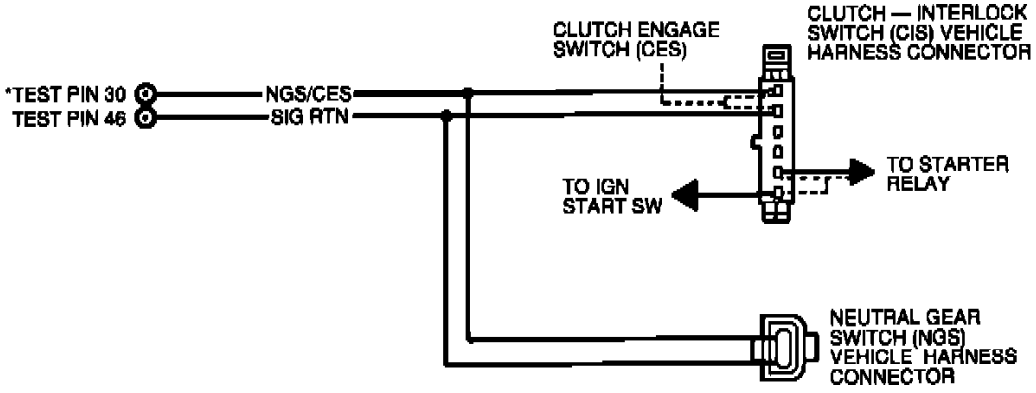

Neutral Drive Input

Crankshaft Position Sensor

For information regarding diagrams for this system, please refer to Powertrain Management diagrams. See: Powertrain Management/Diagrams

Engine Control Module

For information regarding diagrams for this system, please refer to Powertrain Management diagrams. See: Powertrain Management/Diagrams

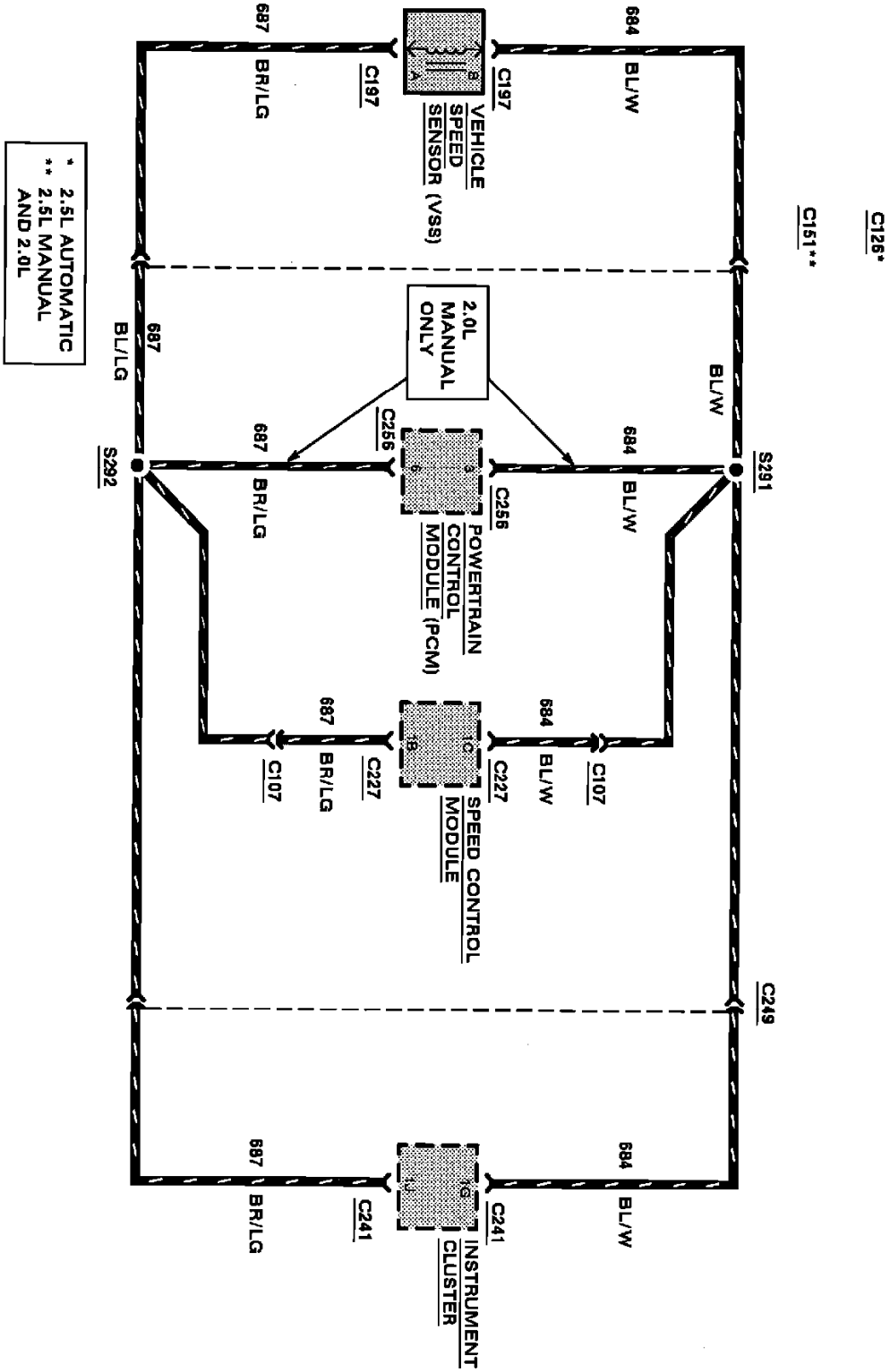

Vehicle Speed Sensor (VSS)

Emission Control Systems

For information regarding diagrams for this system, please refer to Powertrain Management diagrams. See: Powertrain Management/Diagrams

System Diagram

For information regarding diagrams for this system, please refer to Powertrain Management diagrams. See: Powertrain Management/Diagrams

Fuel Injector

For information regarding diagrams for this system, please refer to Powertrain Management diagrams. See: Powertrain Management/Diagrams

Fuel Pump

For information regarding diagrams for this system, please refer to Powertrain Management diagrams. See: Powertrain Management/Diagrams

Inertia Fuel Shutoff Switch

1993 Ford Probe L4-121 2.0L DOHC VIN A MFI

For information regarding diagrams for this system, please refer to Powertrain Management diagrams. See: Powertrain Management/Diagrams

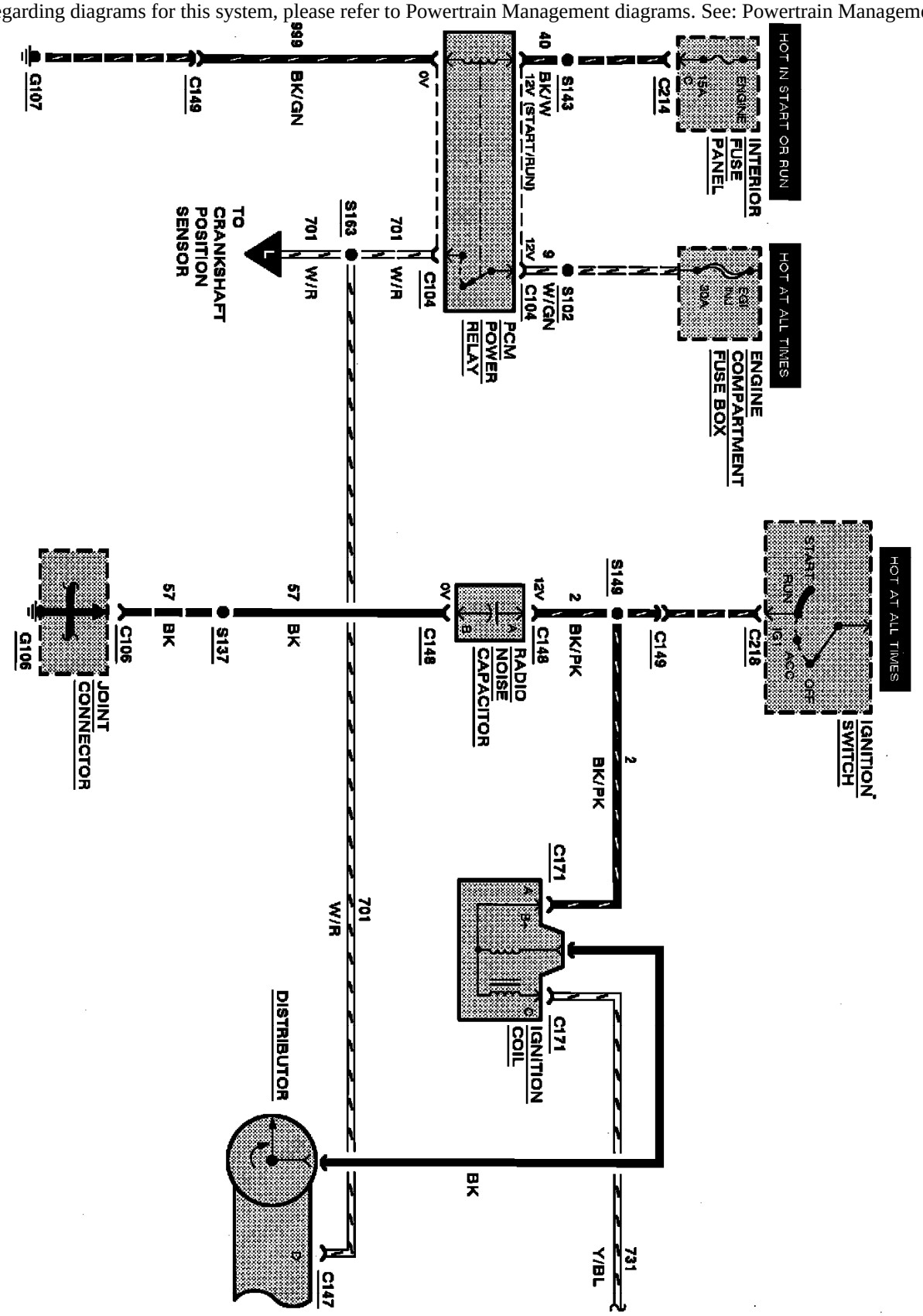

Ignition System W/Manual Transaxle

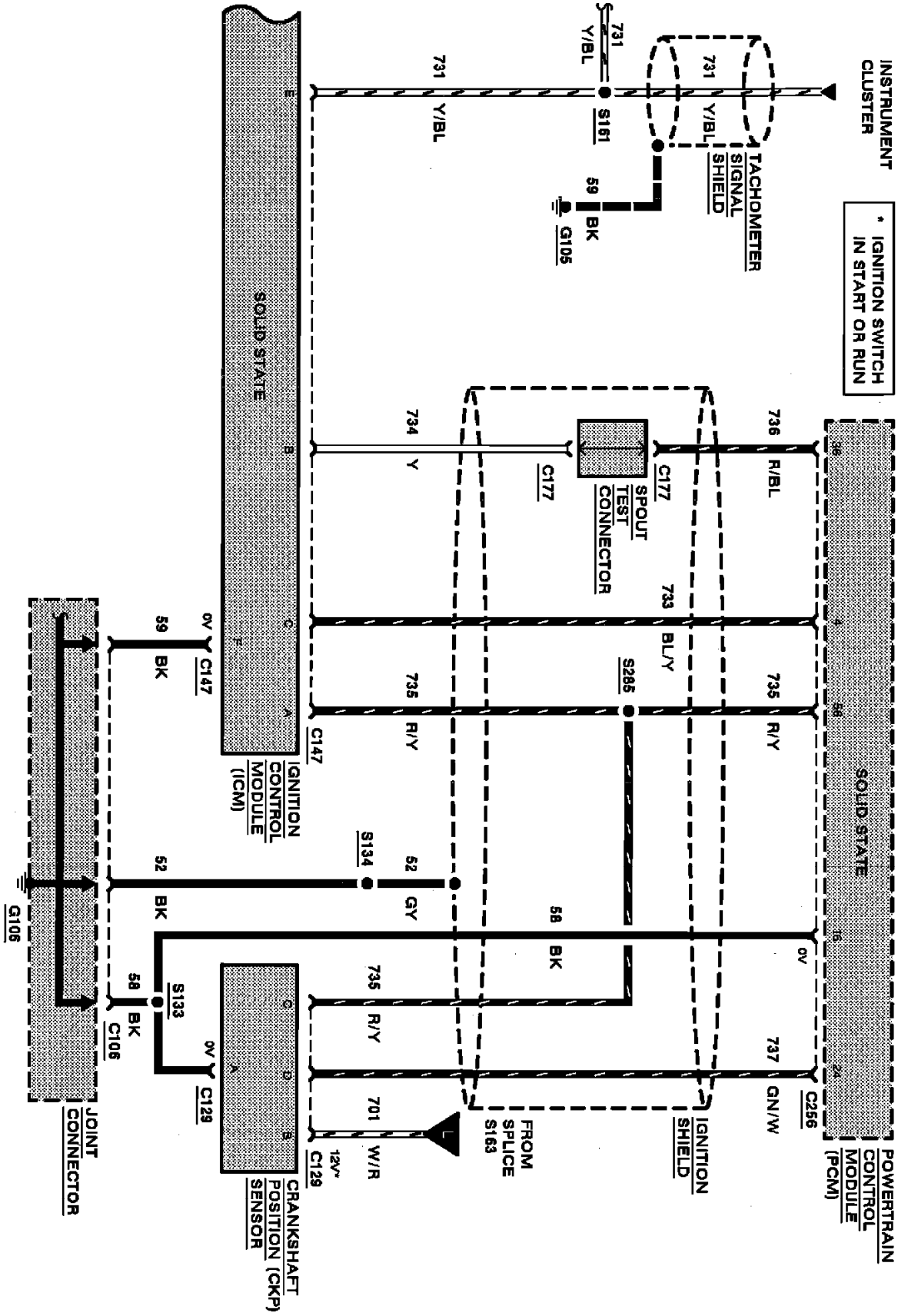

Ignition System W/Manual Transaxle

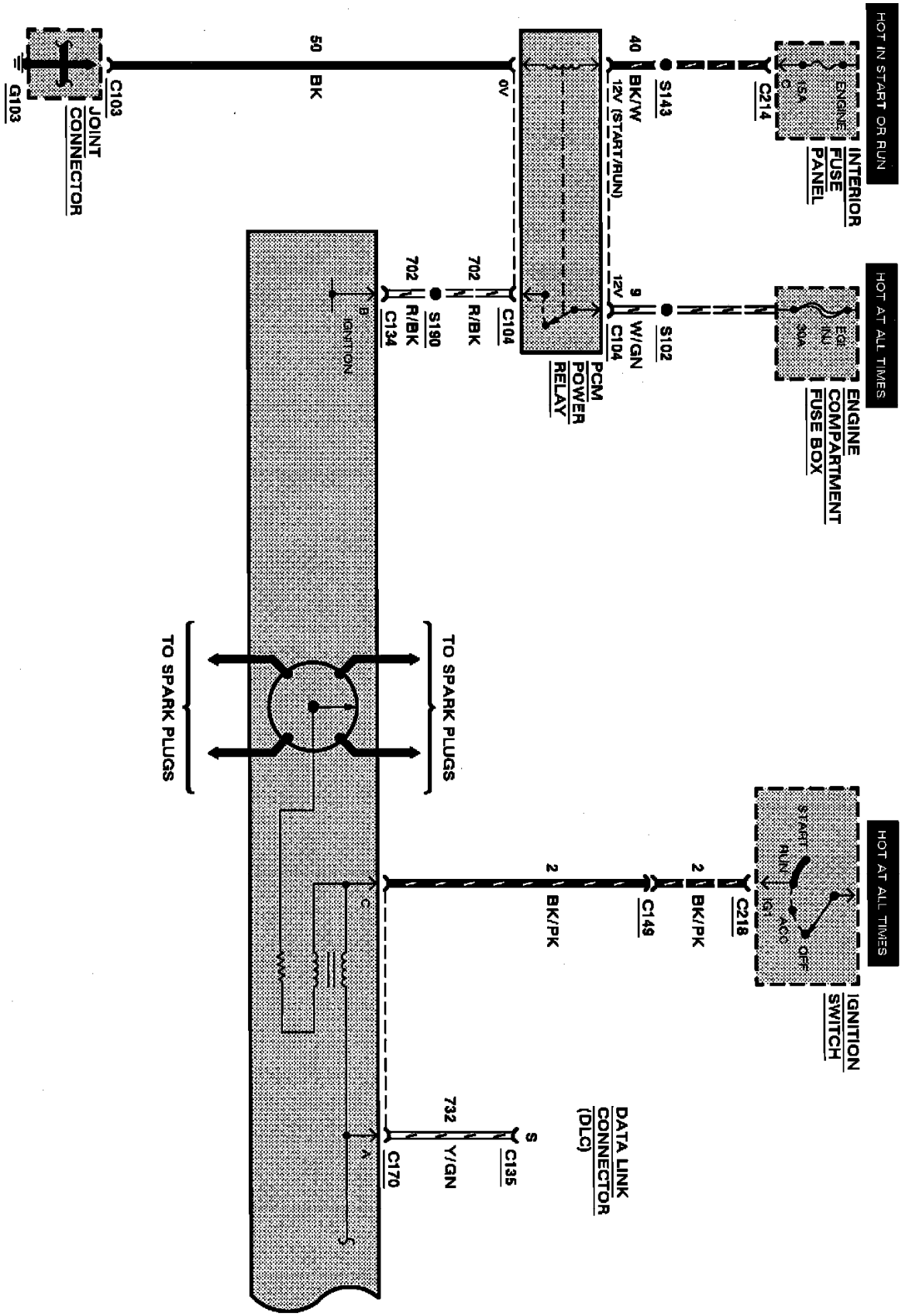

Ignition System W/Automatic Transaxle

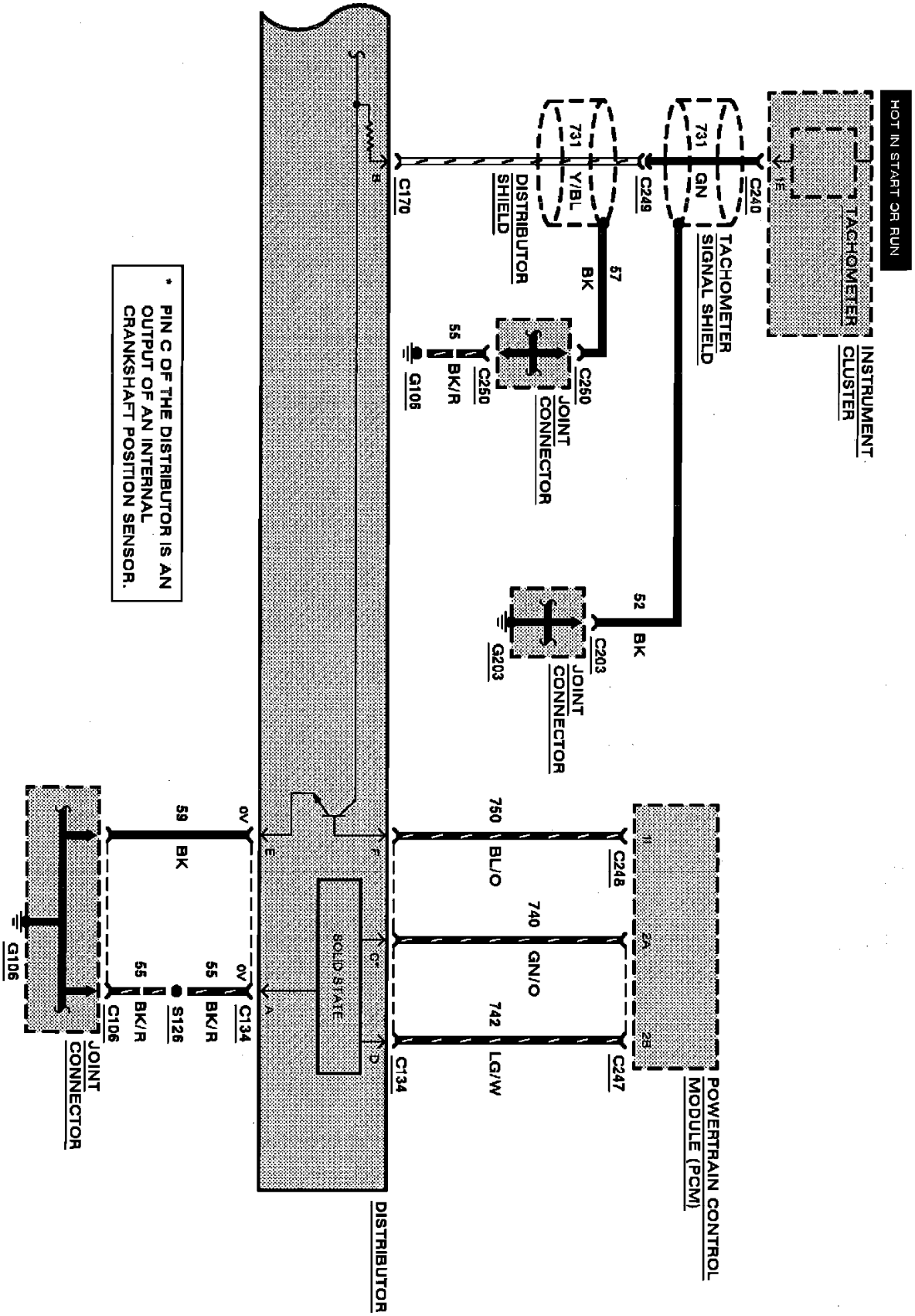

Ignition System W/Automatic Transaxle

Related Powertrain Wiring Diagrams

For information regarding diagrams for this system, please refer to Powertrain Management diagrams. See: Powertrain Management/Diagrams

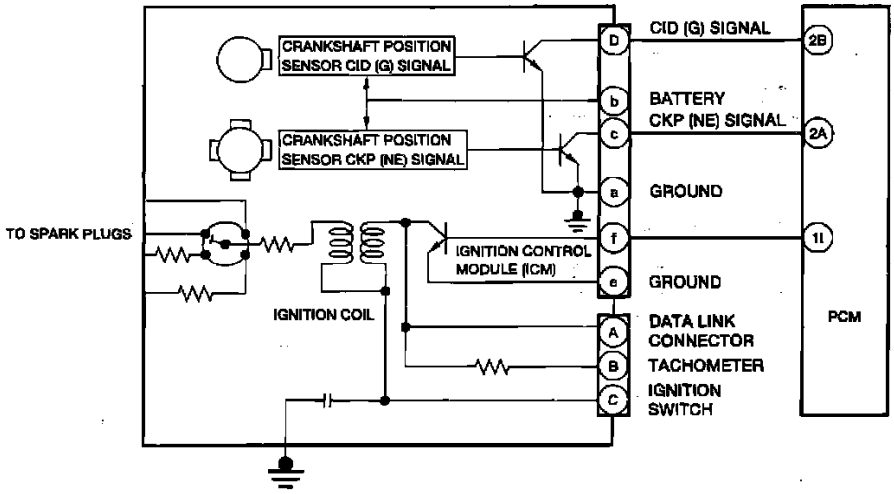

Ignition System Schematic

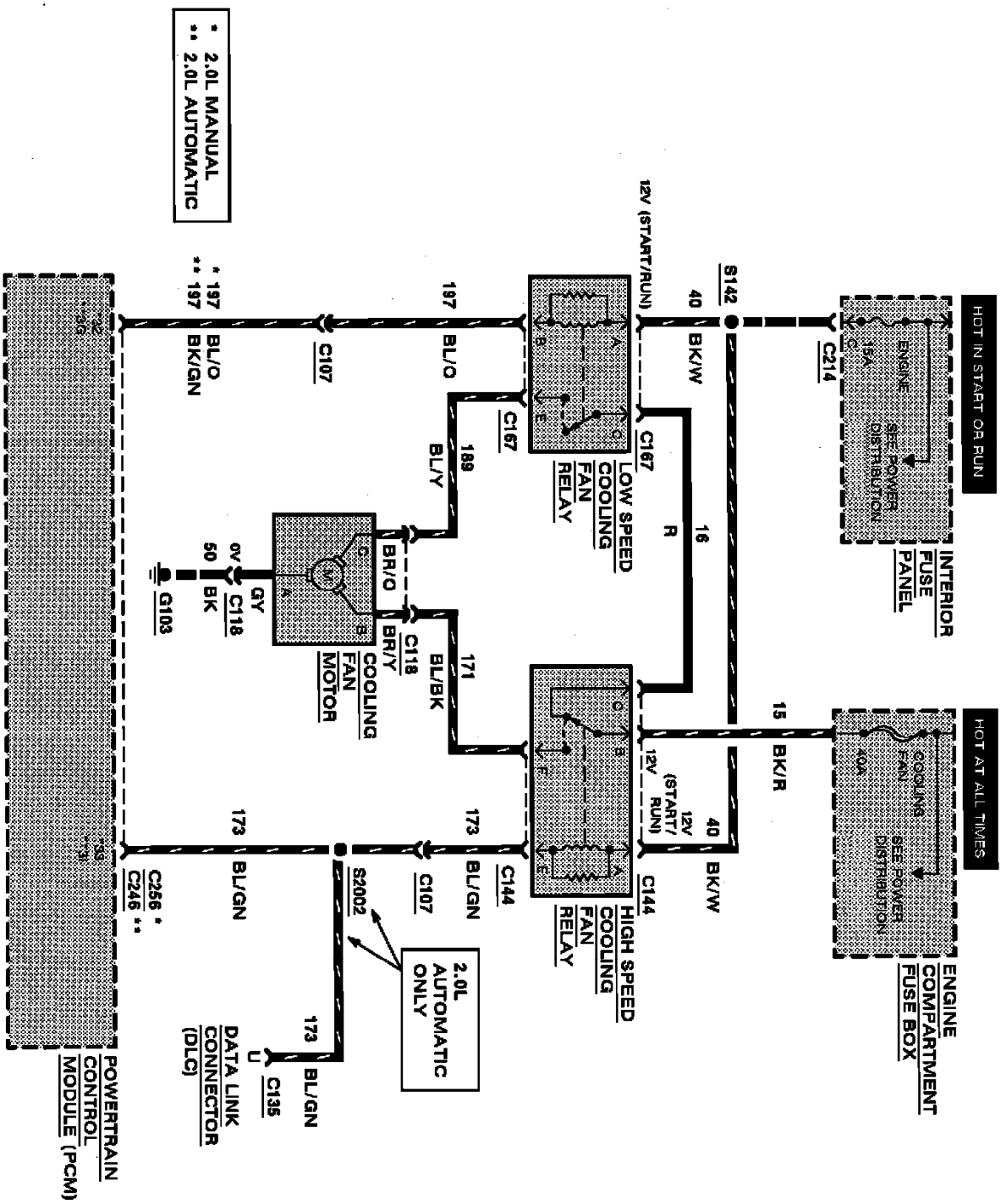

Electric Cooling Fan

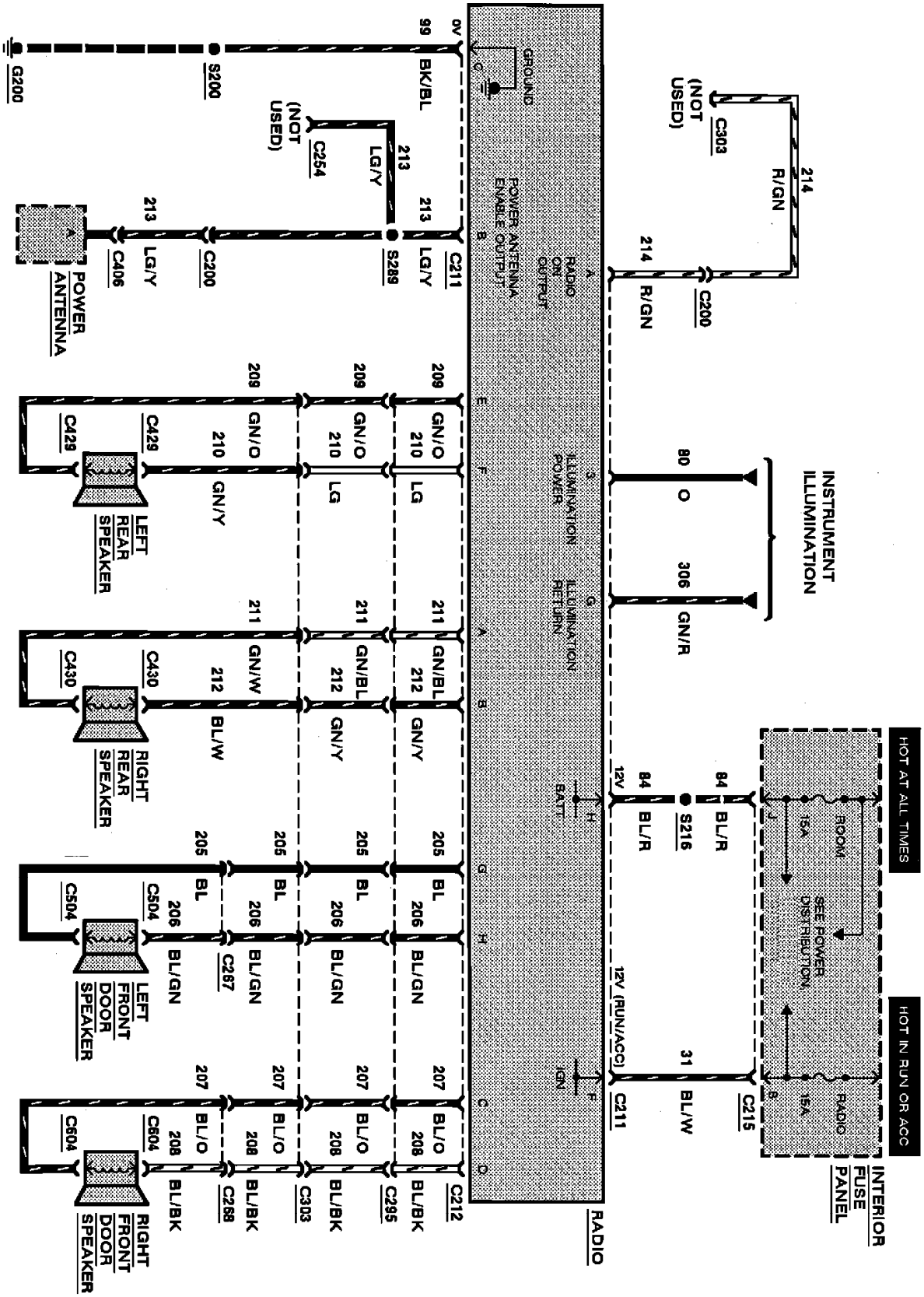

Radio (AM/FM Stereo)

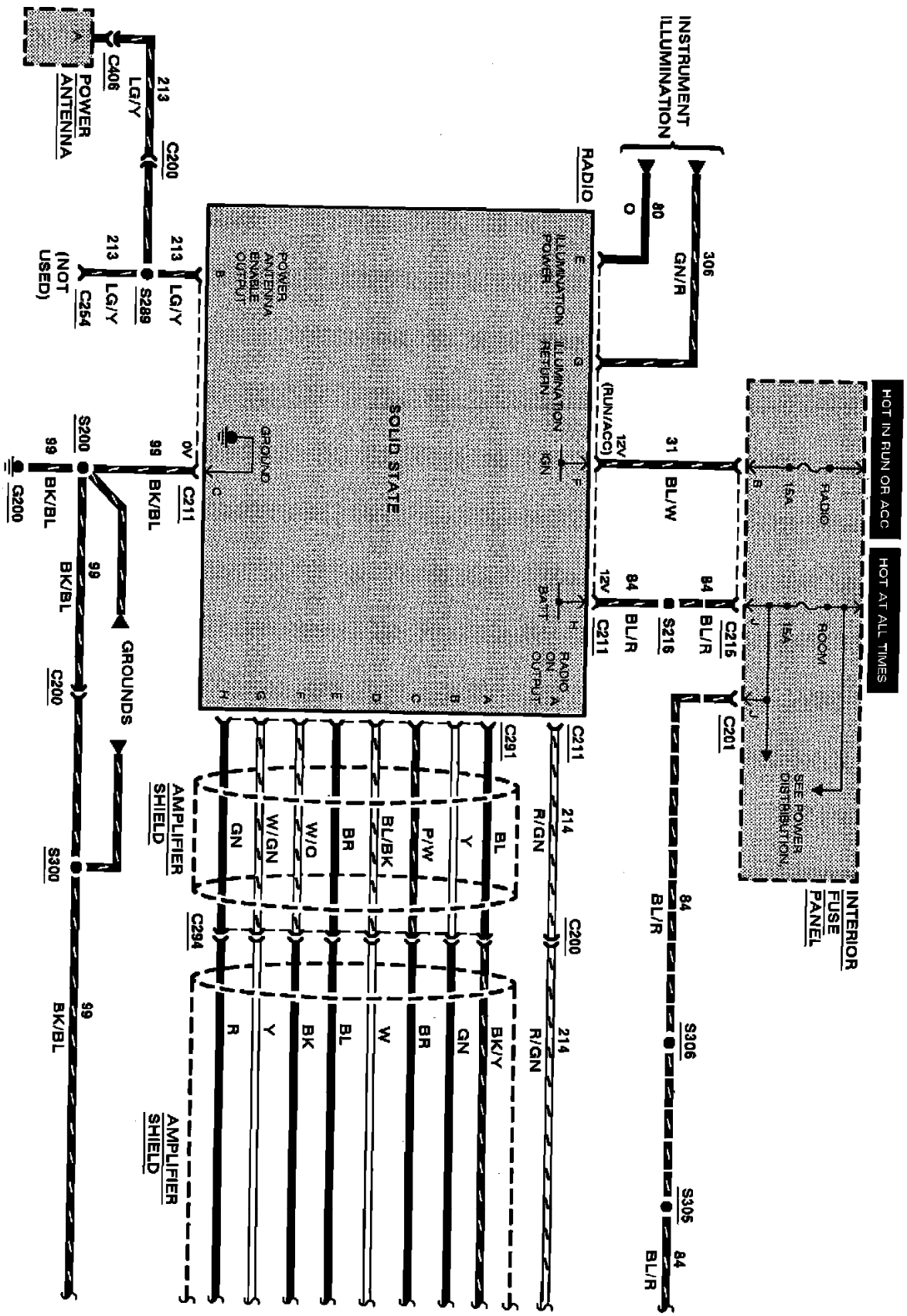

Radio (Premium Sound)

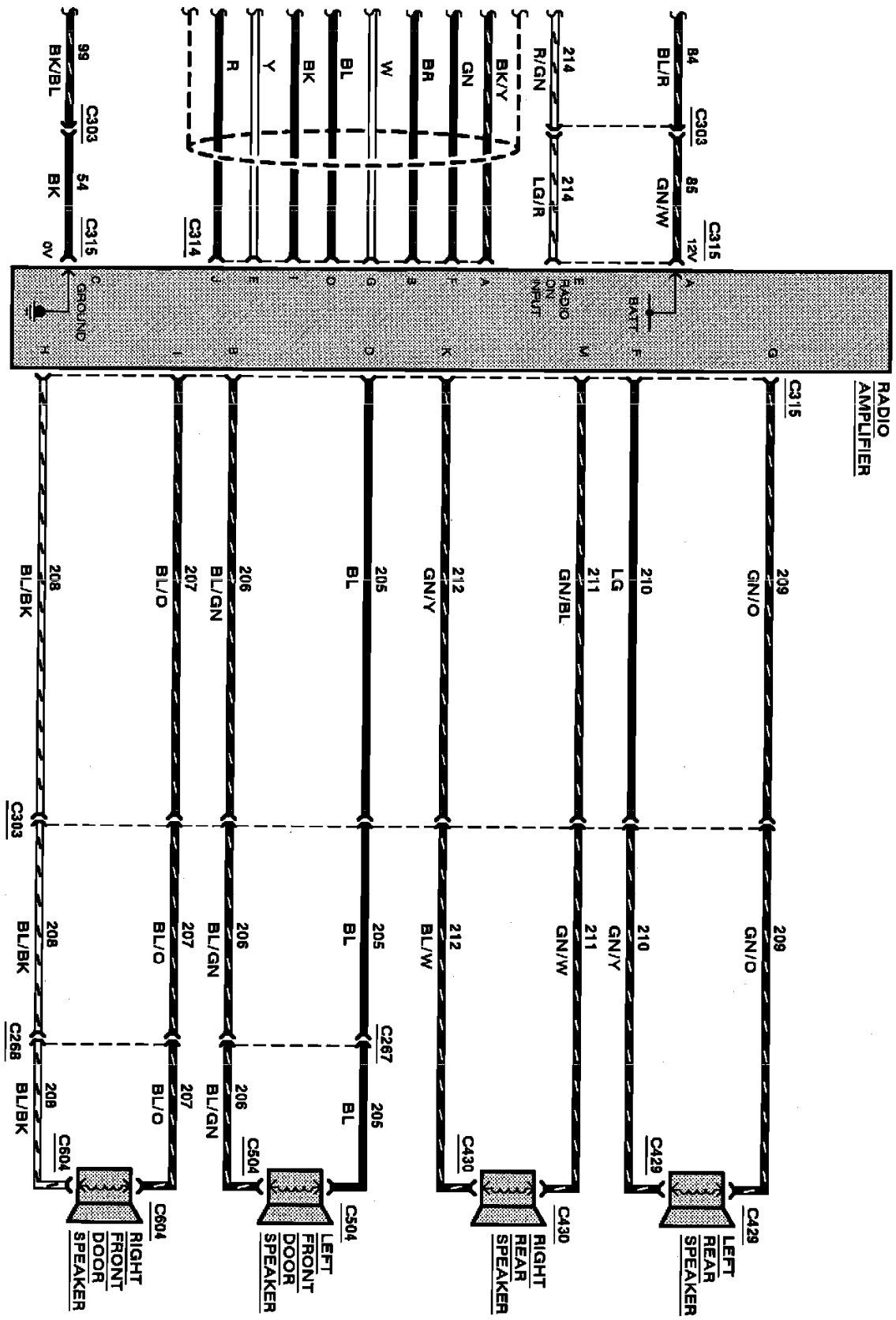

Radio (Premium Sound)

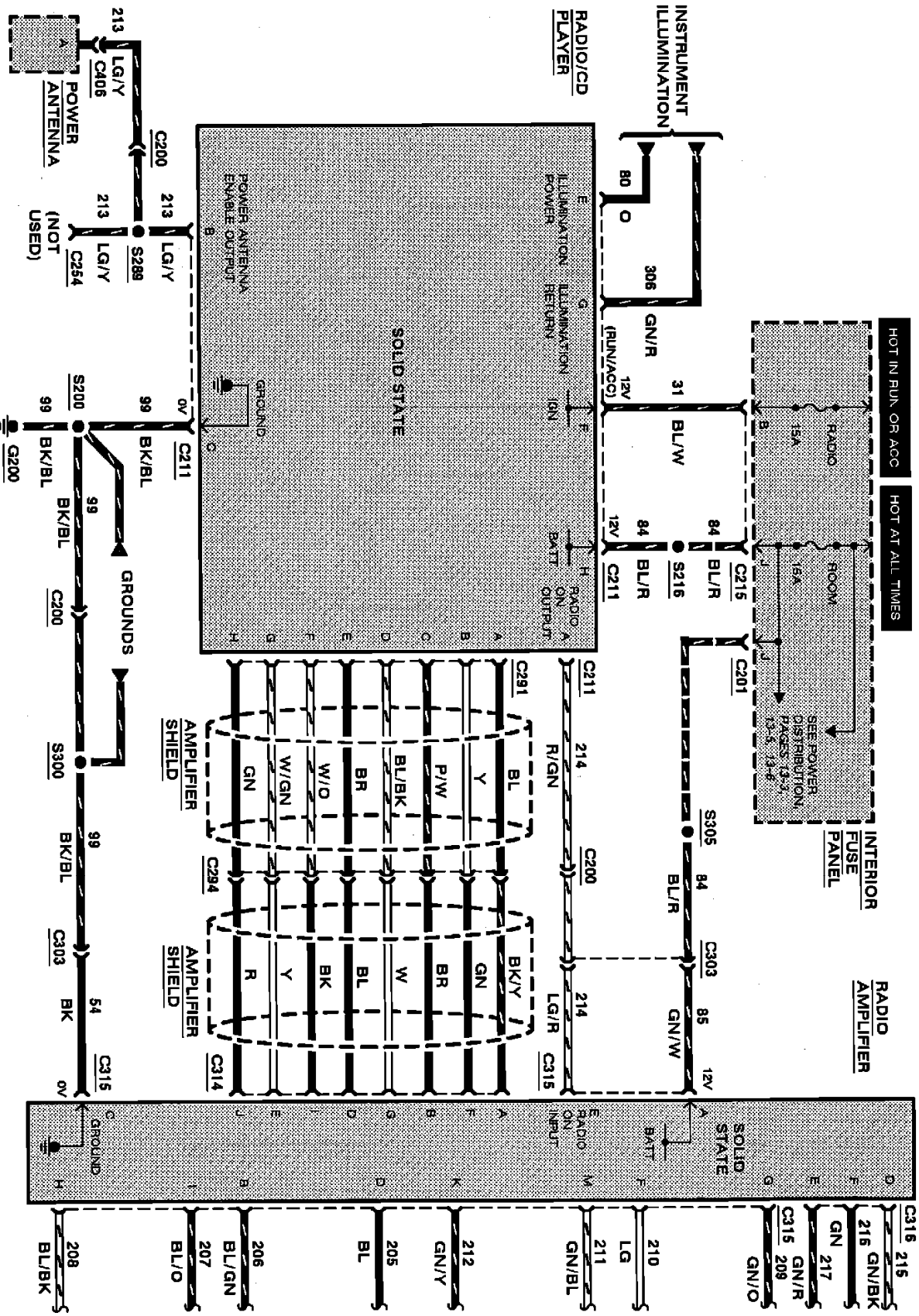

Radio (Premium Sound With CD Player And Subwoofer)

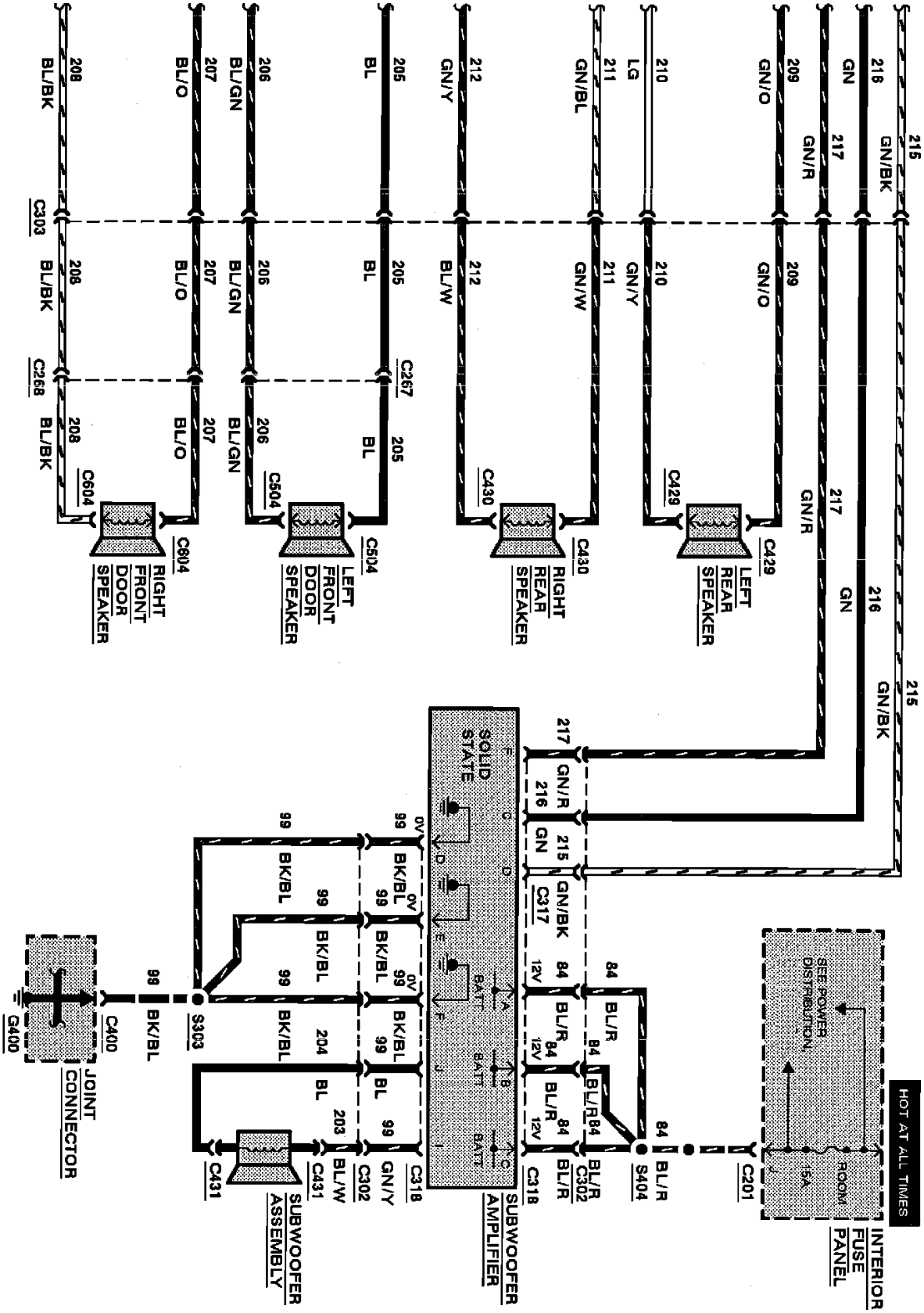

Radio (Premium Sound With CD Player And Subwoofer)

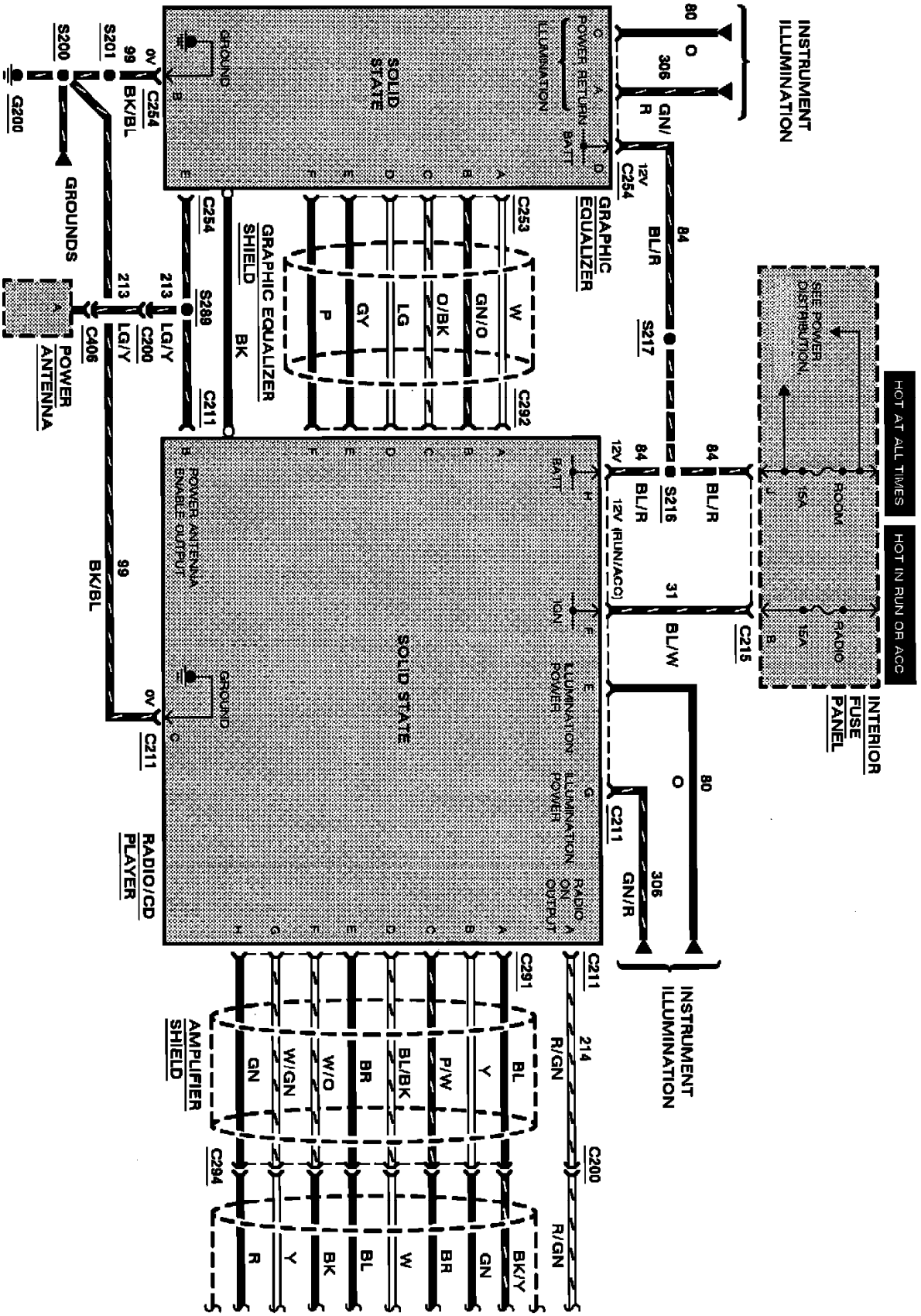

Radio (Premium Sound With CD Player, Graphic Equalizer And Subwoofer)

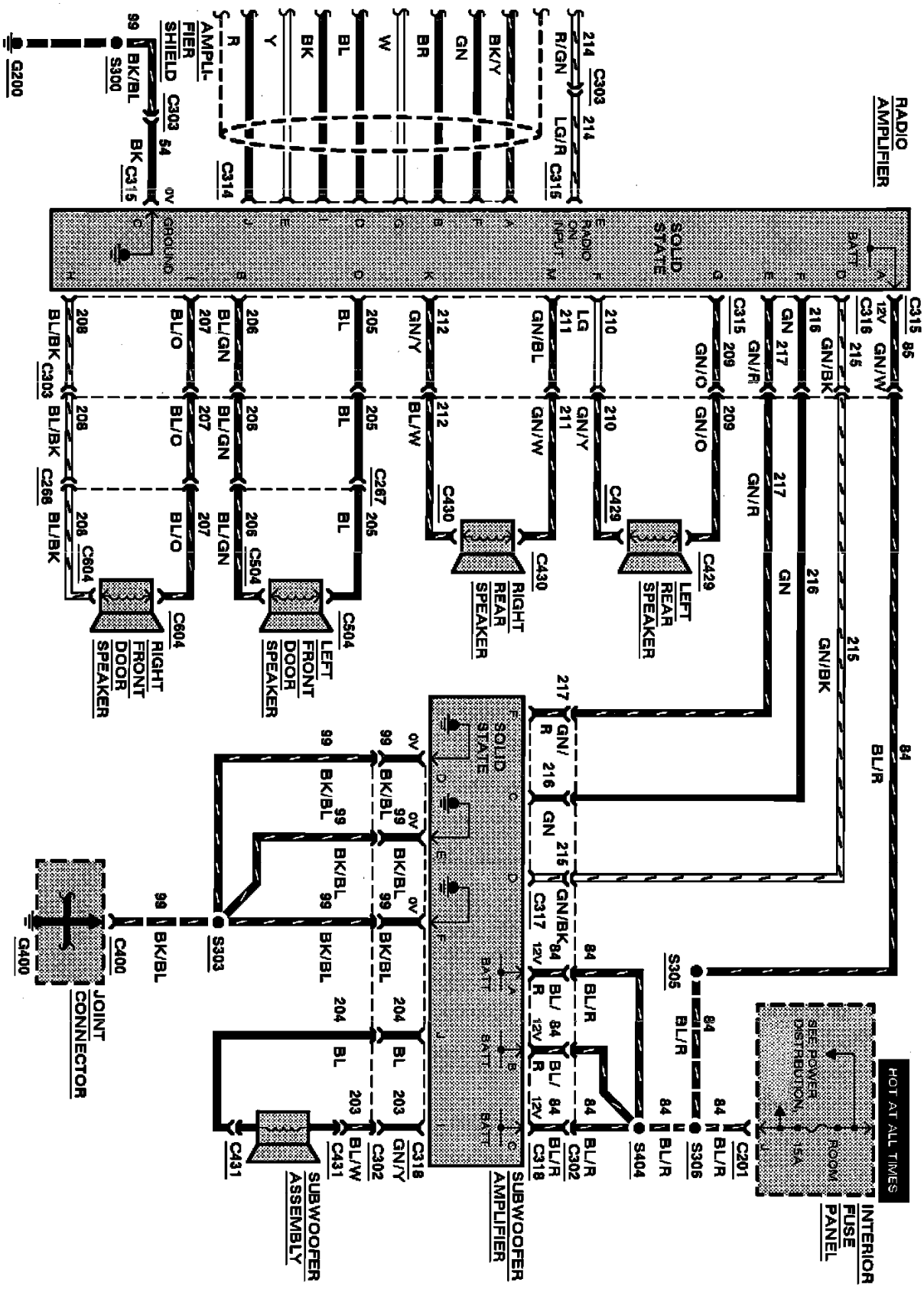

Radio (Premium Sound With CD Player, Graphic Equalizer And Subwoofer)

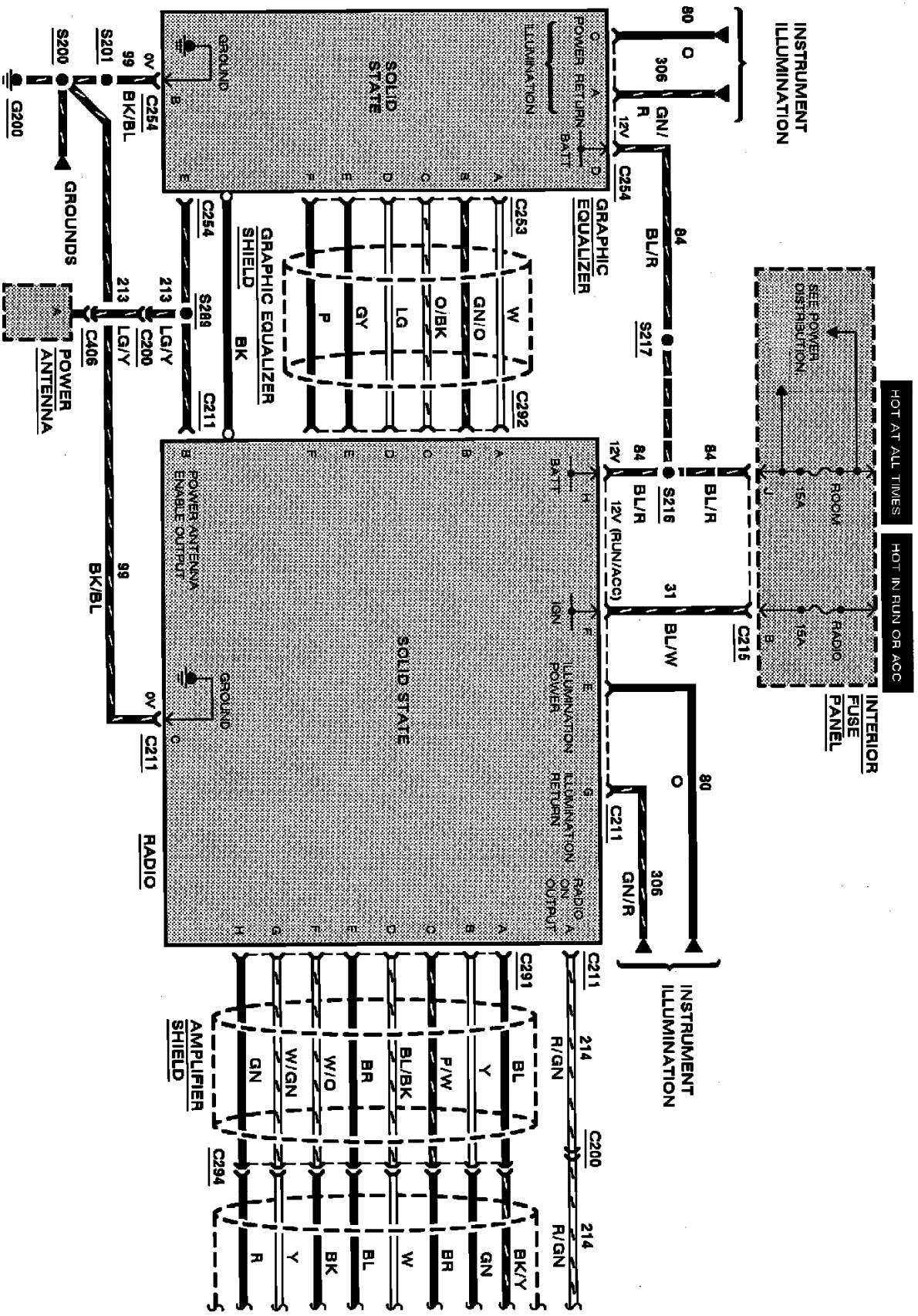

Radio (Premium Sound With Graphic Equalizer)

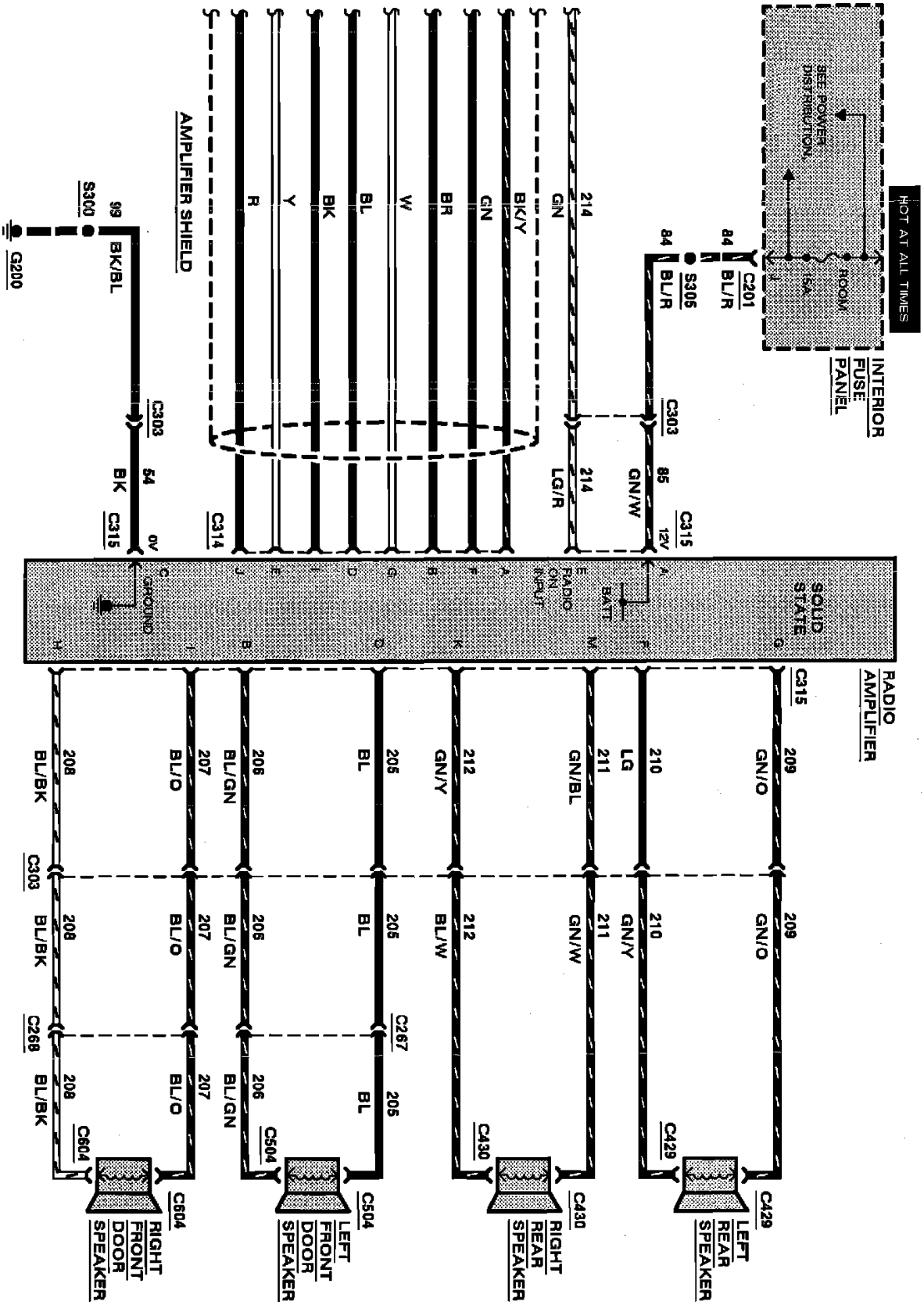

Radio (Premium Sound With Graphic Equalizer)

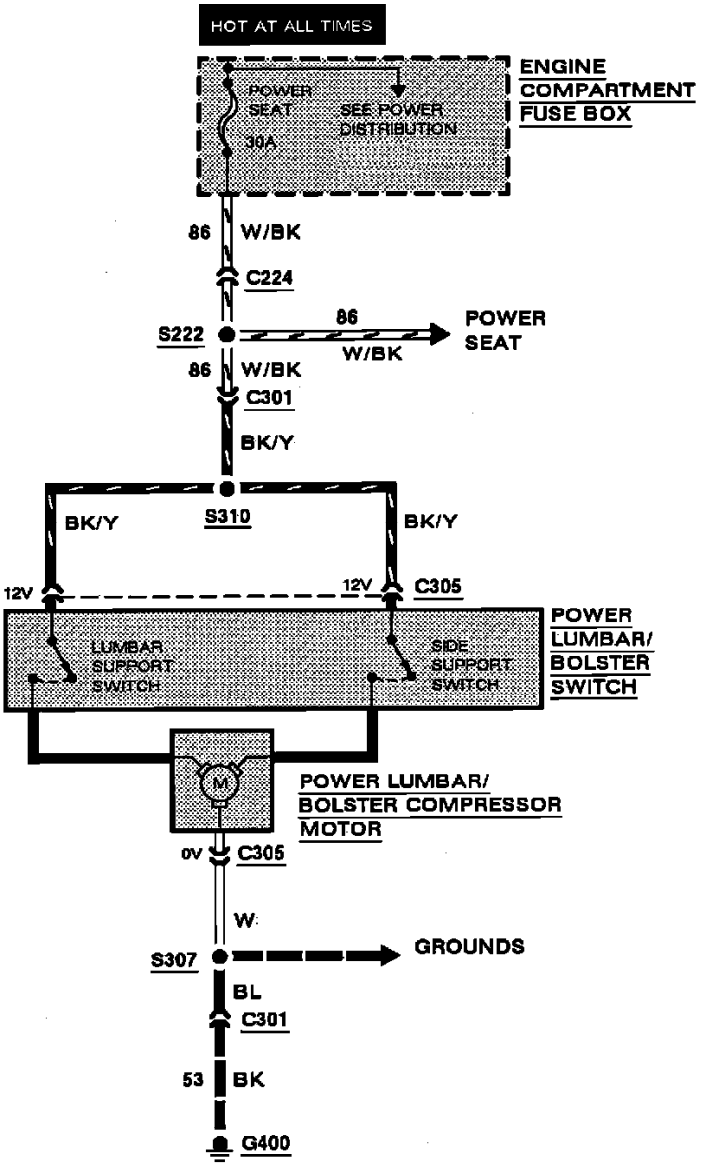

Power Lumbar Seat

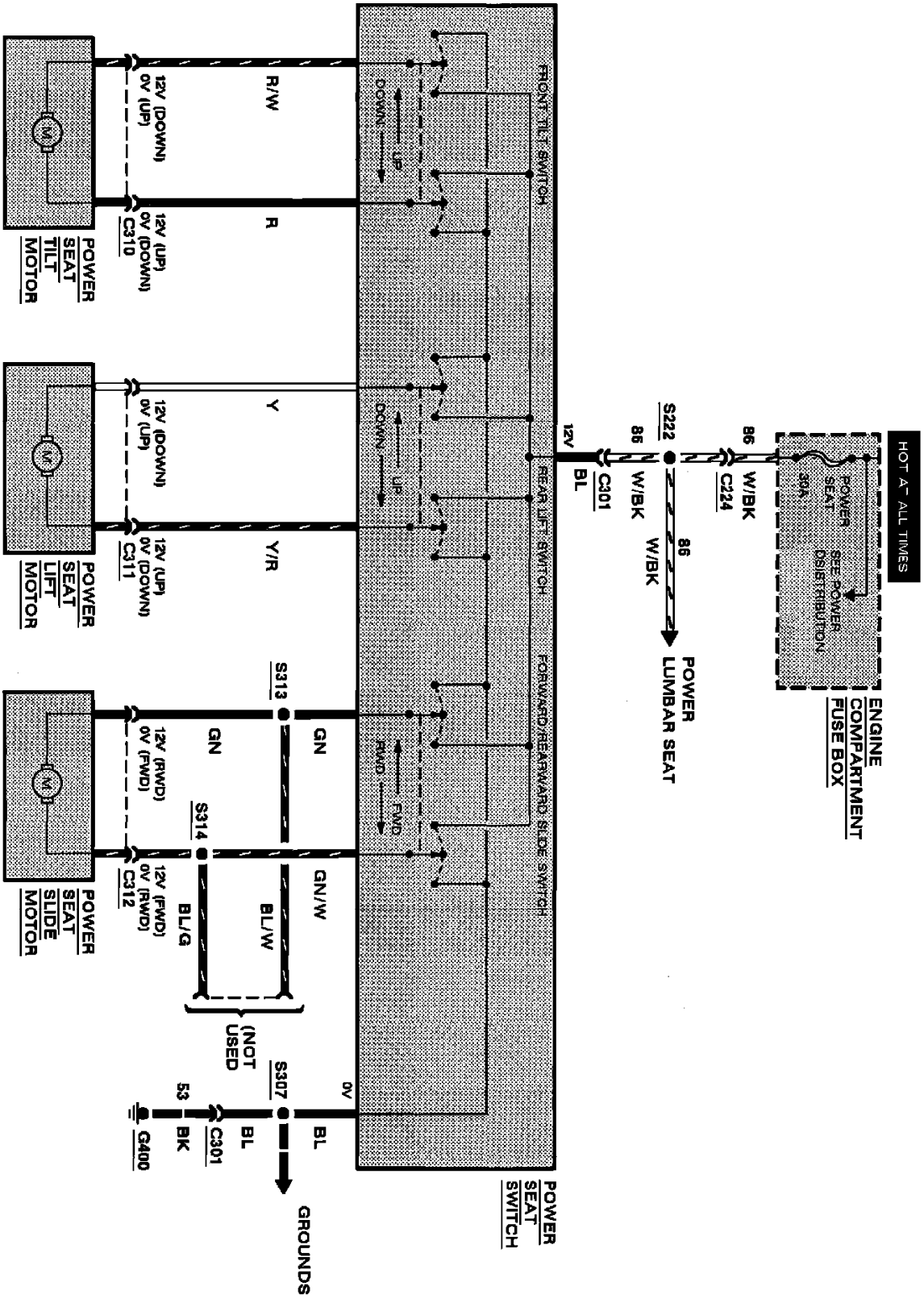
HOT AT ALL TIMES
ENGINE COMPARTMENT FUSE BOX
POWER SEAT
30A
SEE POWER DISTRIBUTION
86
W/BK
C224
S222
86
W/BK
86
W/BK
POWER LUMBAR SEAT
12V
C301
BL
FRONT TILT SWITCH
REAR LIFT SWITCH
FORWARD/REARWARD SLIDE SWITCH
UP
DOWN
FWD
POWER SEAT SWITCH
R/W
R
Y
Y/R
GN
GN/W
BL/W
BL/G
BL
0V
S313
S314
S307
C301
G400
53
BK
(NOT USED)
GROUNDS
12V (DOWN)
0V (UP)
12V (UP)
0V (DOWN)
C310
C311
12V (FWD)
0V (FWD)
12V (FWD)
0V (RWD)
C312
POWER SEAT TILT MOTOR
POWER SEAT LIFT MOTOR
POWER SEAT SLIDE MOTOR

Power Seat

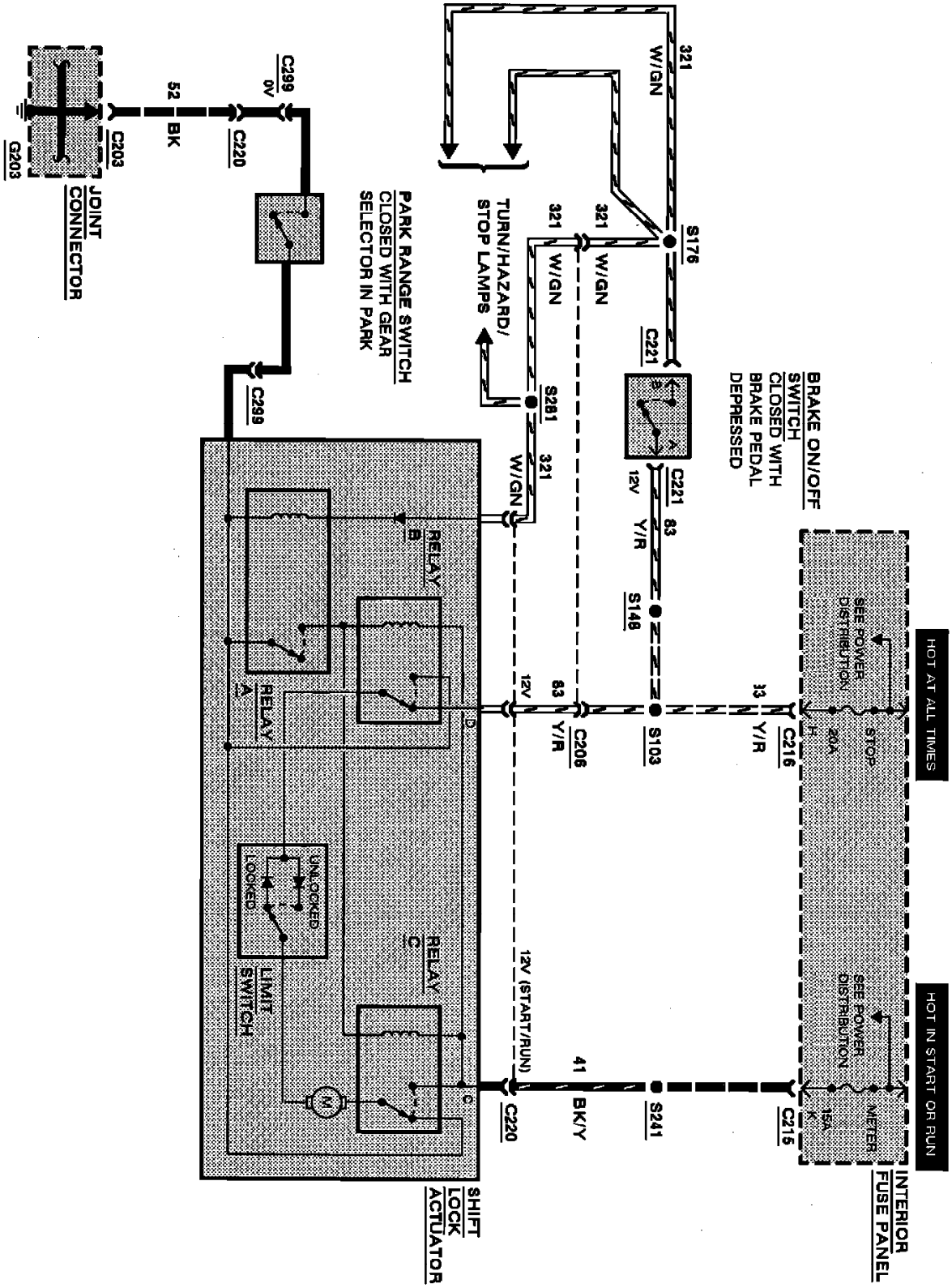
HOT AT ALL TIMES
HOT IN START OR RUN
INTERIOR FUSE PANEL
SEE POWER DISTRIBUTION
STOP
METER
20A
15A
H
K
C216
C215
S103
S241
33
Y/R
41
BK/Y
12V (START/RUN)
C220
BRAKE ON/OFF SWITCH
CLOSED WITH BRAKE PEDAL DEPRESSED
C221
12V
83
Y/R
S148
C206
12V
83
Y/R
S281
321
W/GN
TURN/HAZARD/ STOP LAMPS
S176
PARK RANGE SWITCH
CLOSED WITH GEAR SELECTOR IN PARK
C299
0V
C220
52
BK
C203
JOINT CONNECTOR
G203
RELAY
B
RELAY
A
RELAY
C
UNLOCKED
LOCKED
LIMIT SWITCH
M
SHIFT LOCK ACTUATOR

Shift Lock

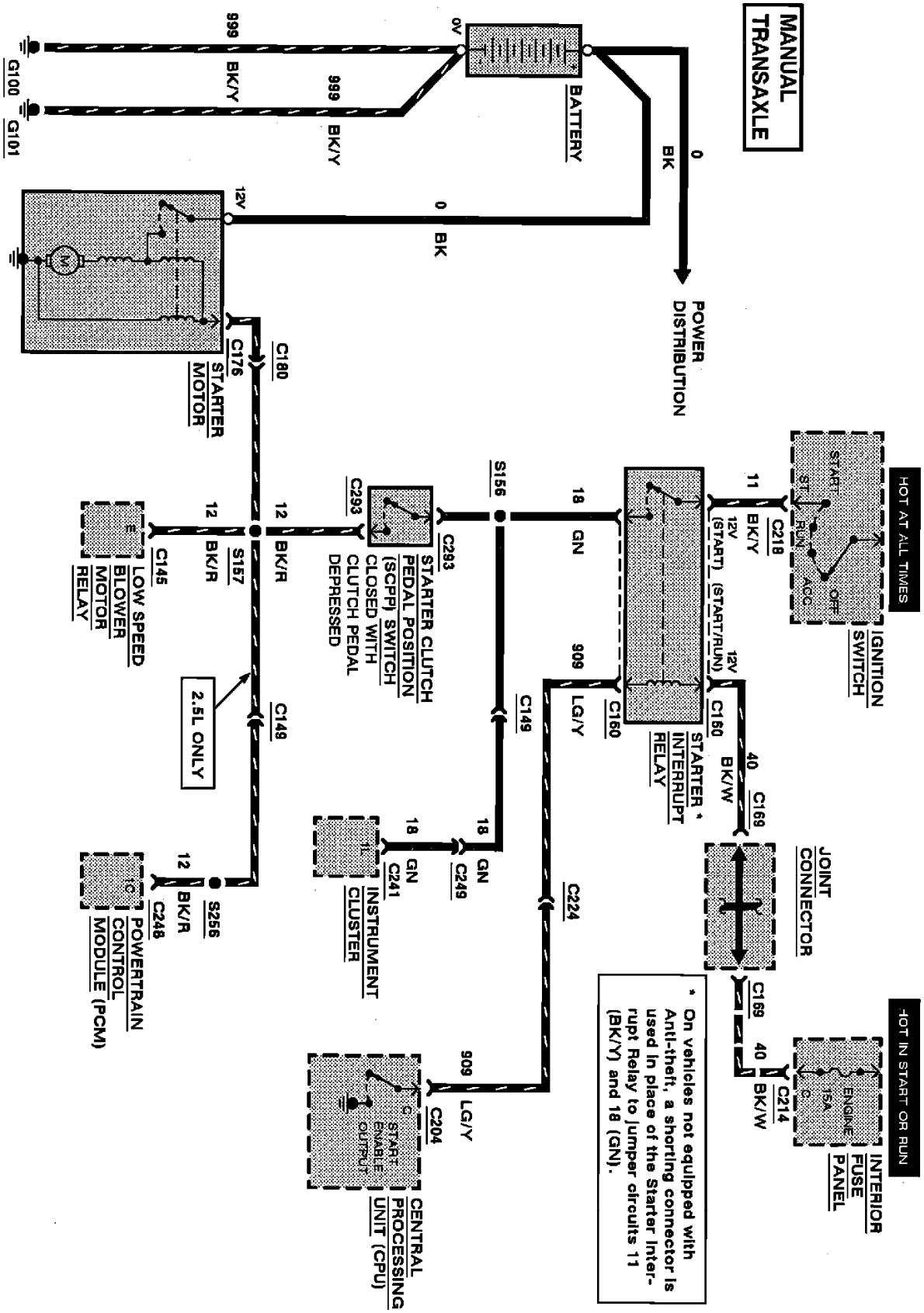

Manual Transaxle

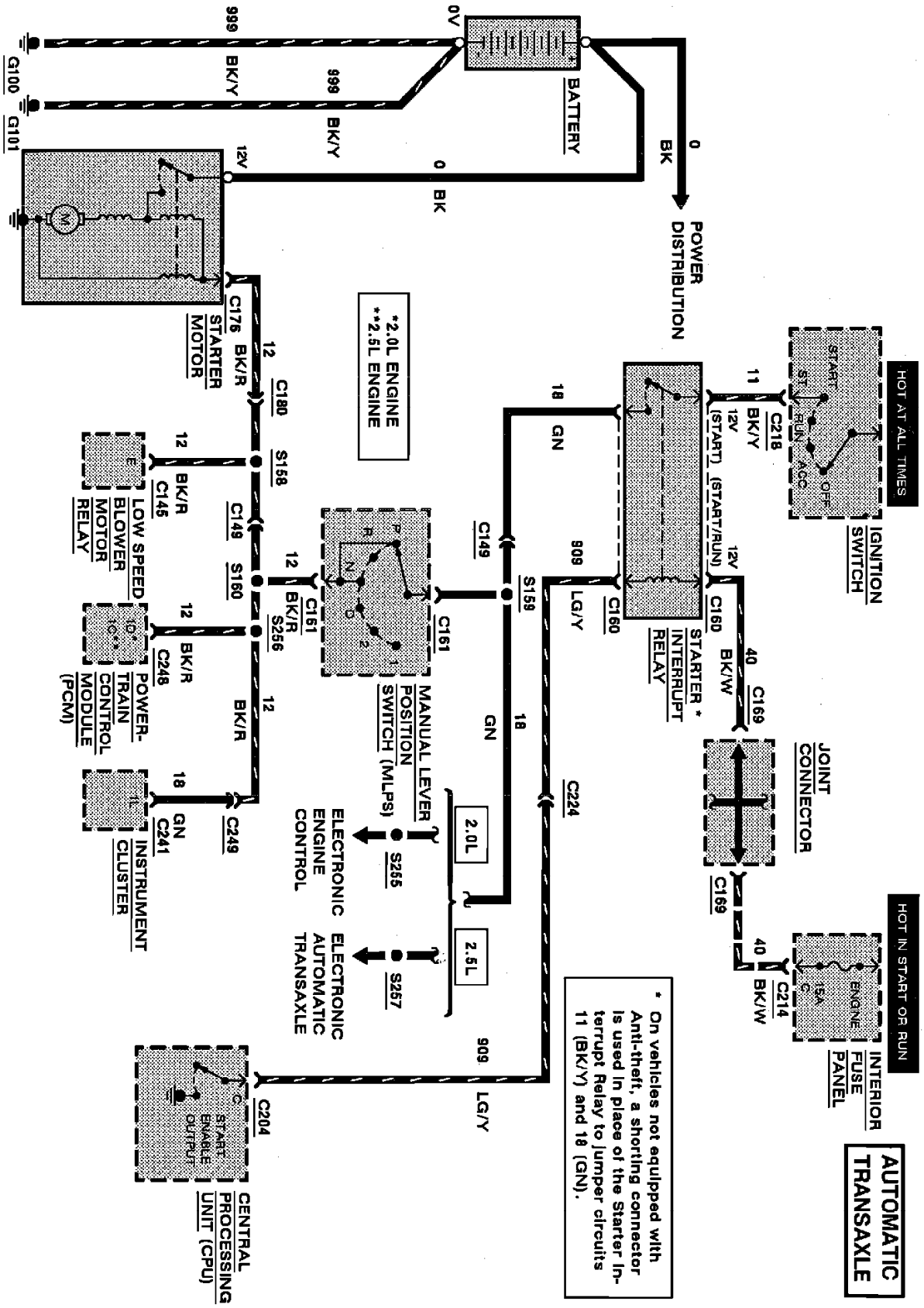

Automatic Transaxle

Ignition Lock

For Wiring Diagrams, please refer to: Starting System/Diagrams, See: Starting and Charging/Starting System/Diagrams

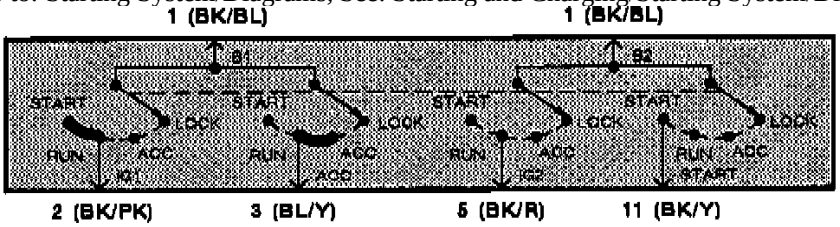

Schematic

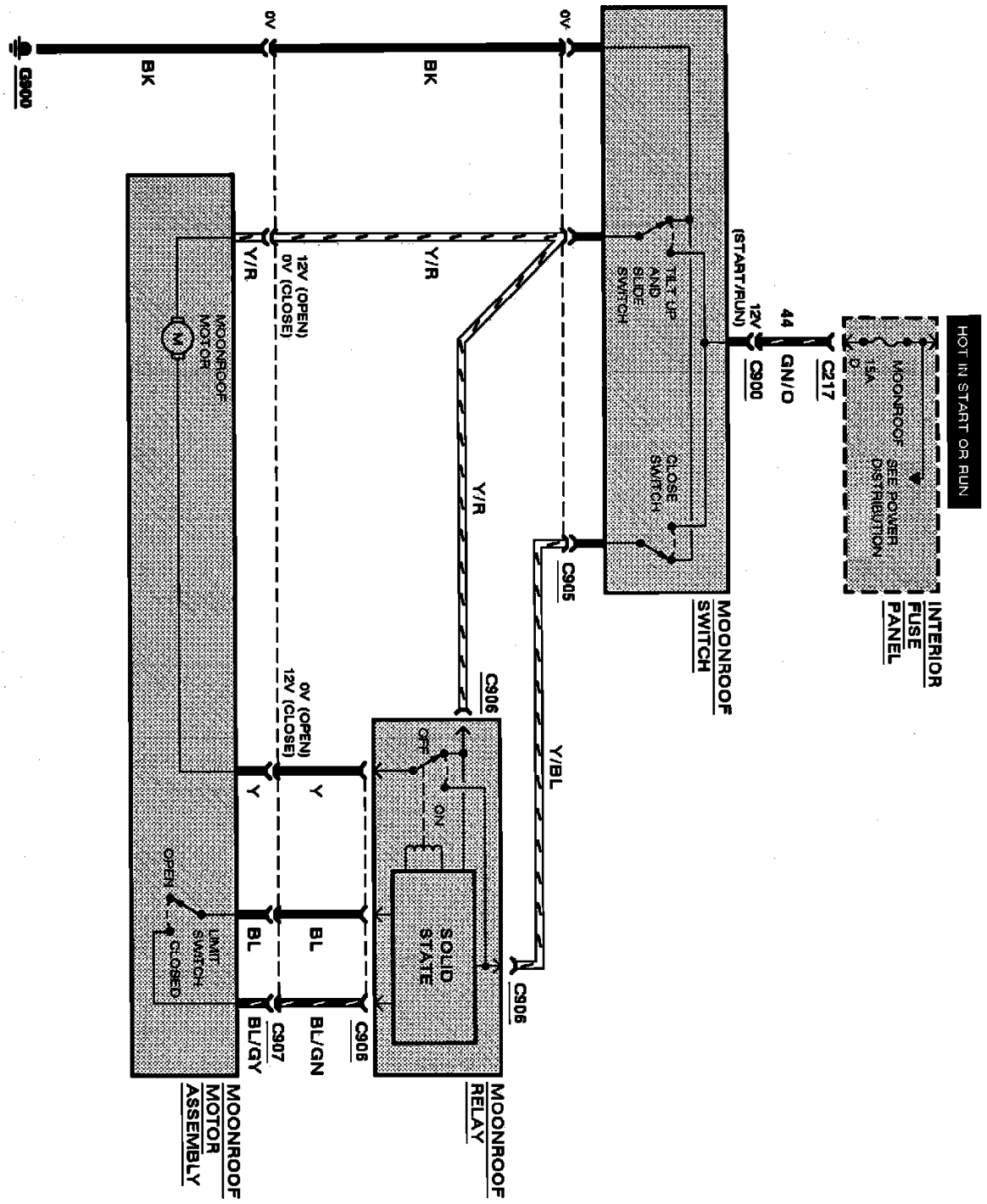

Power Moonroof

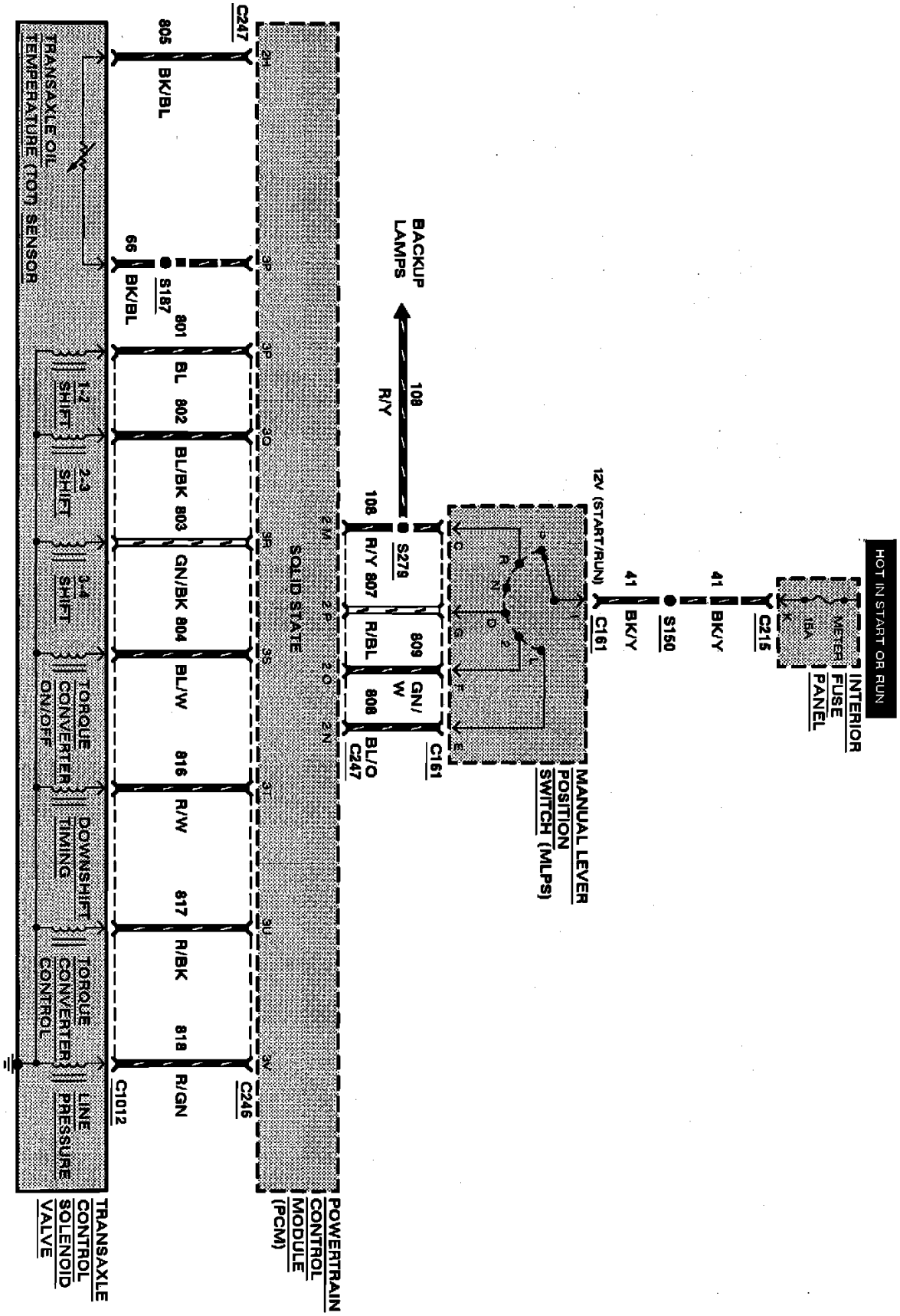

Automatic Transaxle

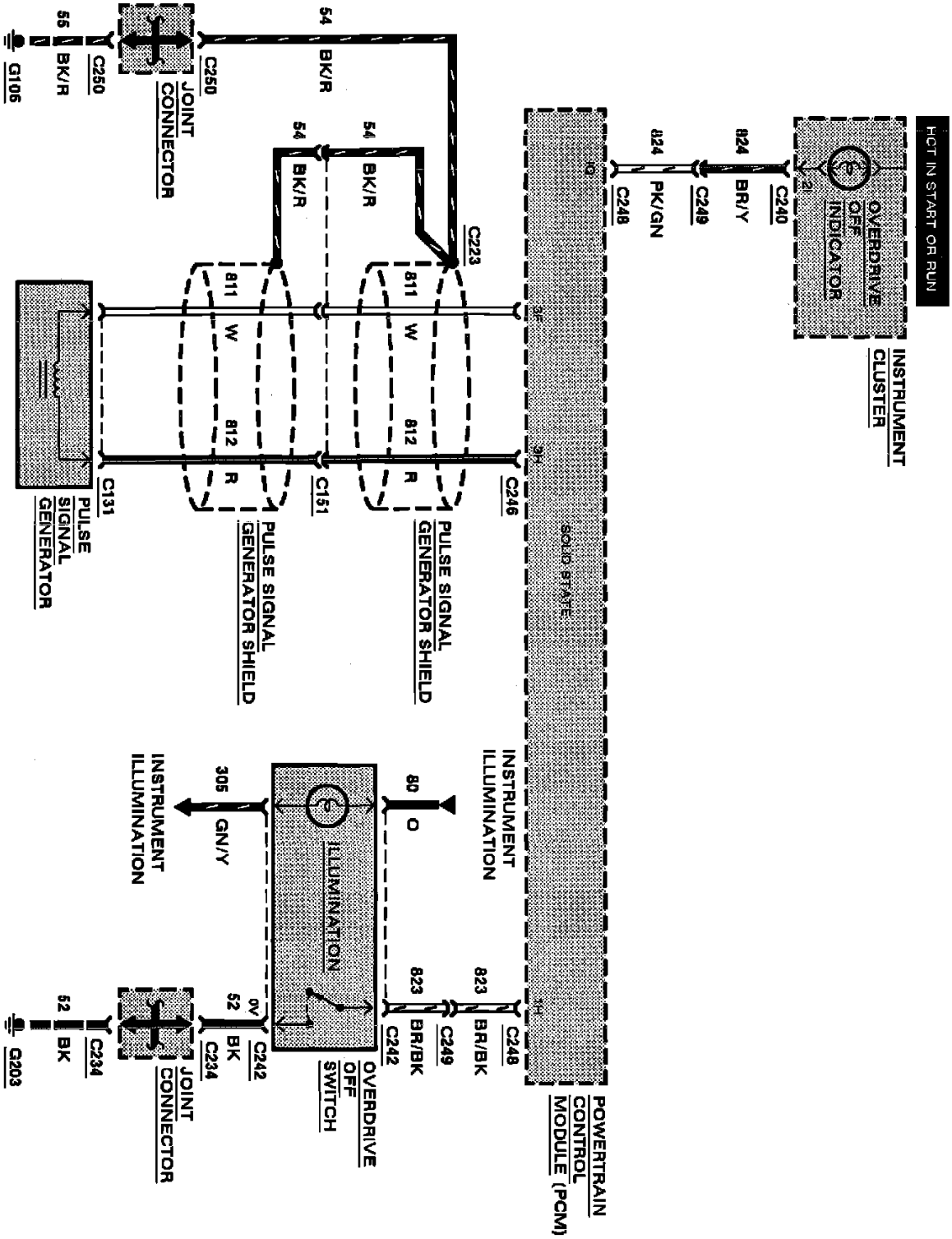

Automatic Transaxle

Transmission Position Switch/Sensor, A/T

Manual Lever Position (MLP) Sensor

1993 Ford Probe L4-121 2.0L DOHC VIN A MFI

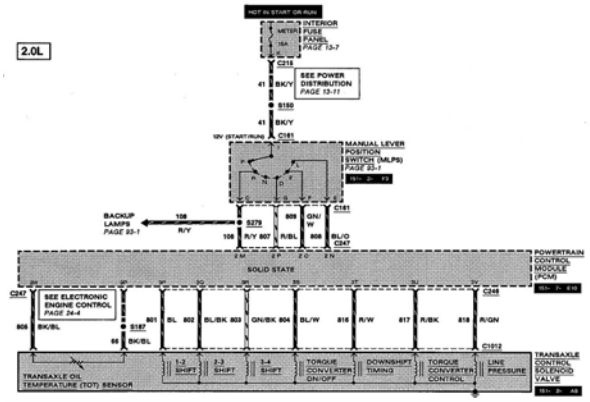

29-1

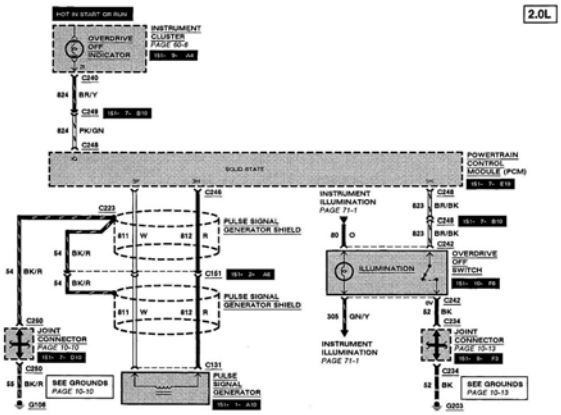

29-2

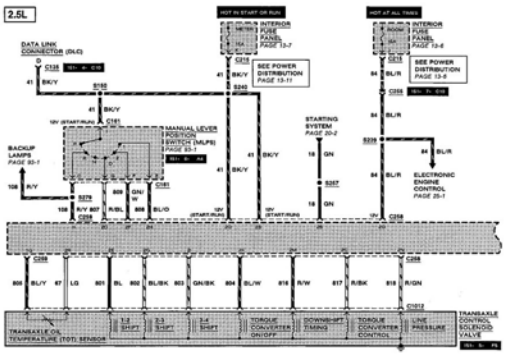

29-3

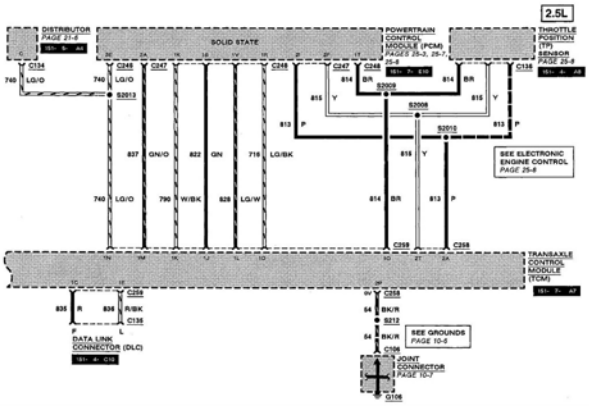

29-4

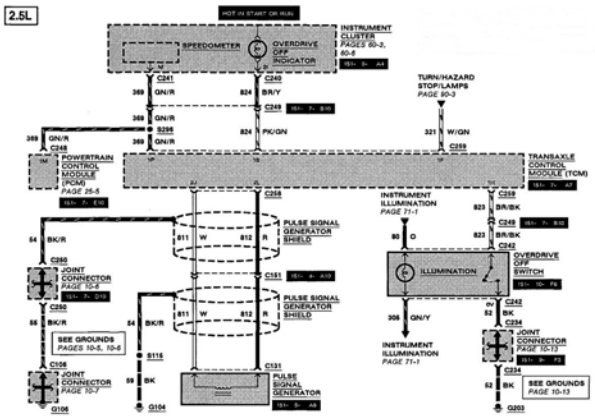
2.5L
HOT IN START OR RUN
INSTRUMENT CLUSTER
PAGES 60-3, 60-6
SPEEDOMETER
OVERDRIVE OFF INDICATOR
C241
C248
369 GN/R
824 BR/Y
C249
368 GN/R
S296
824 PK/GN
369 GN/R
369 GN/R
C245
TURN/HAZARD STOP/LAMPS
PAGE 90-3
321 W/GN
C255
POWERTRAIN CONTROL MODULE (PCM)
PAGE 26-5
TRANSAXLE CONTROL MODULE (TCM)
C258
INSTRUMENT ILLUMINATION
PAGE 71-1
823 BR/BK
C249
823 BR/BK
C242
80 O
ILLUMINATION
OVERDRIVE OFF SWITCH
54 BK/R
C250
JOINT CONNECTOR
PAGE 10-8
C250
56 BK/R
SEE GROUNDS
PAGES 10-5, 10-6
C106
JOINT CONNECTOR
PAGE 10-7
G106
S811 W
S812 R
PULSE SIGNAL GENERATOR SHIELD
C161
PULSE SIGNAL GENERATOR SHIELD
54 BK/R
S115
59 BK
G104
C131
PULSE SIGNAL GENERATOR
306 GN/Y
INSTRUMENT ILLUMINATION
PAGE 71-1
C242
52 BK
C234
JOINT CONNECTOR
PAGE 10-12
C234
52 BK
SEE GROUNDS
PAGE 10-13
G203

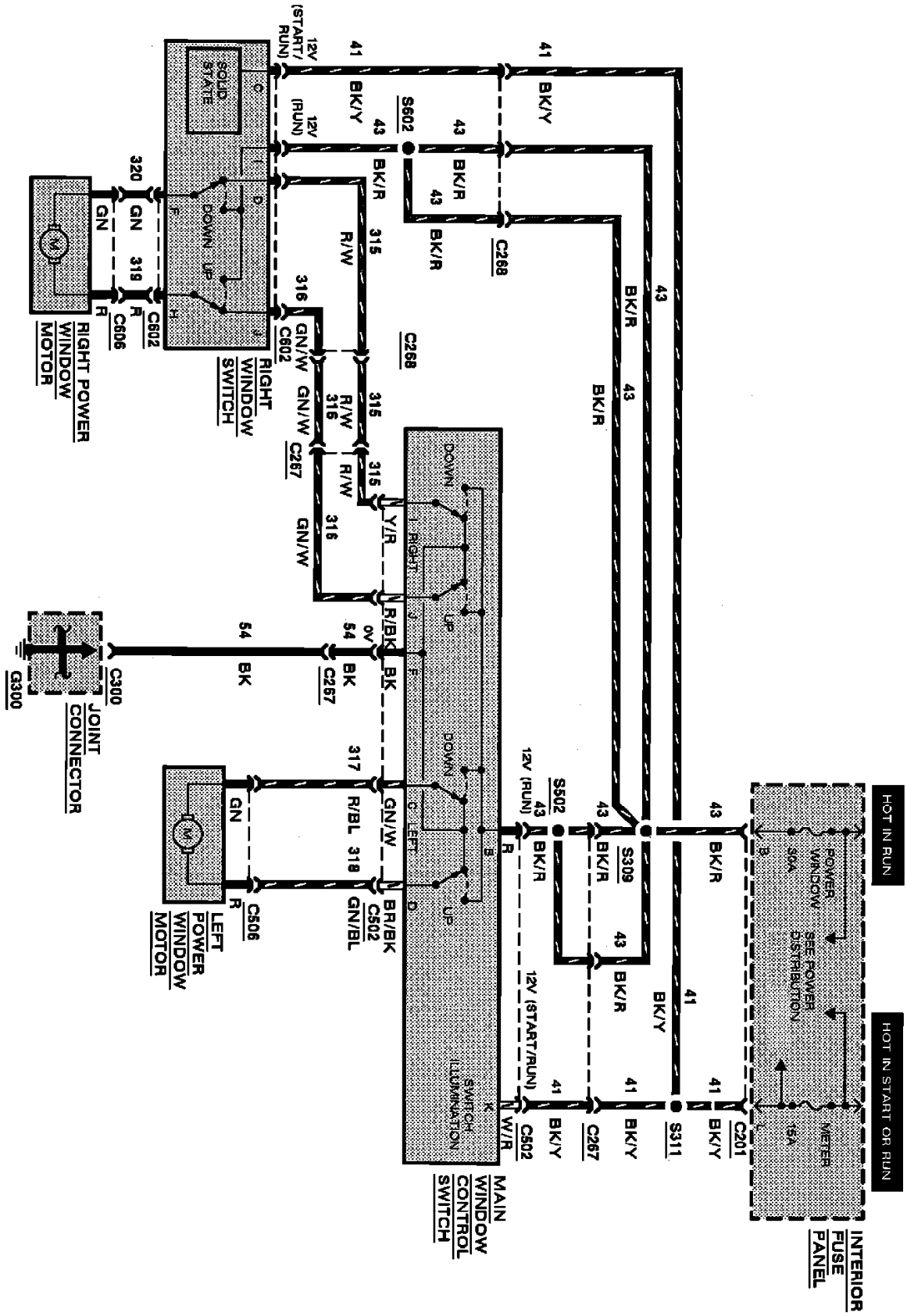

Power Window

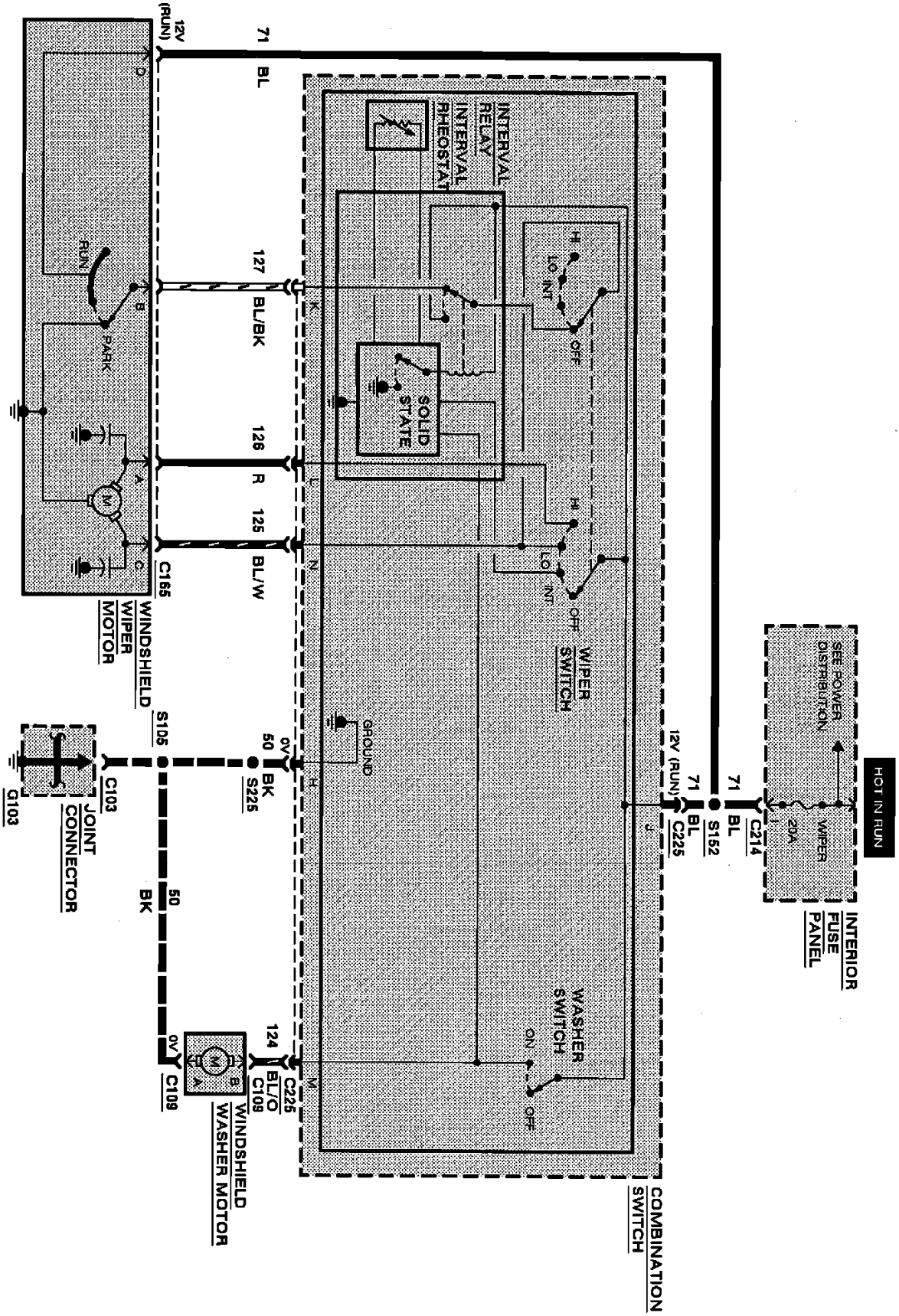

Interval Wiper/Washer

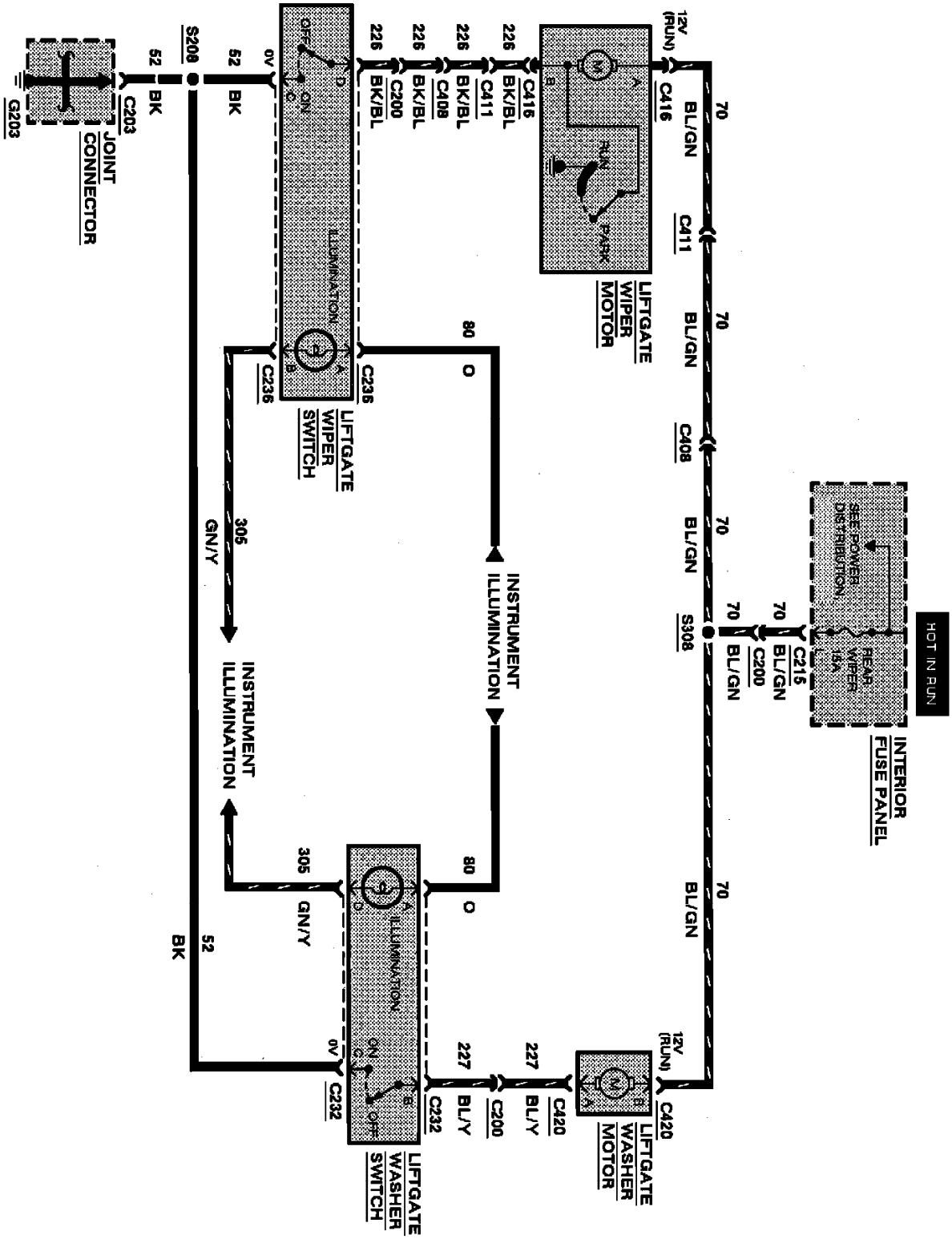

Liftgate Wiper/Washer

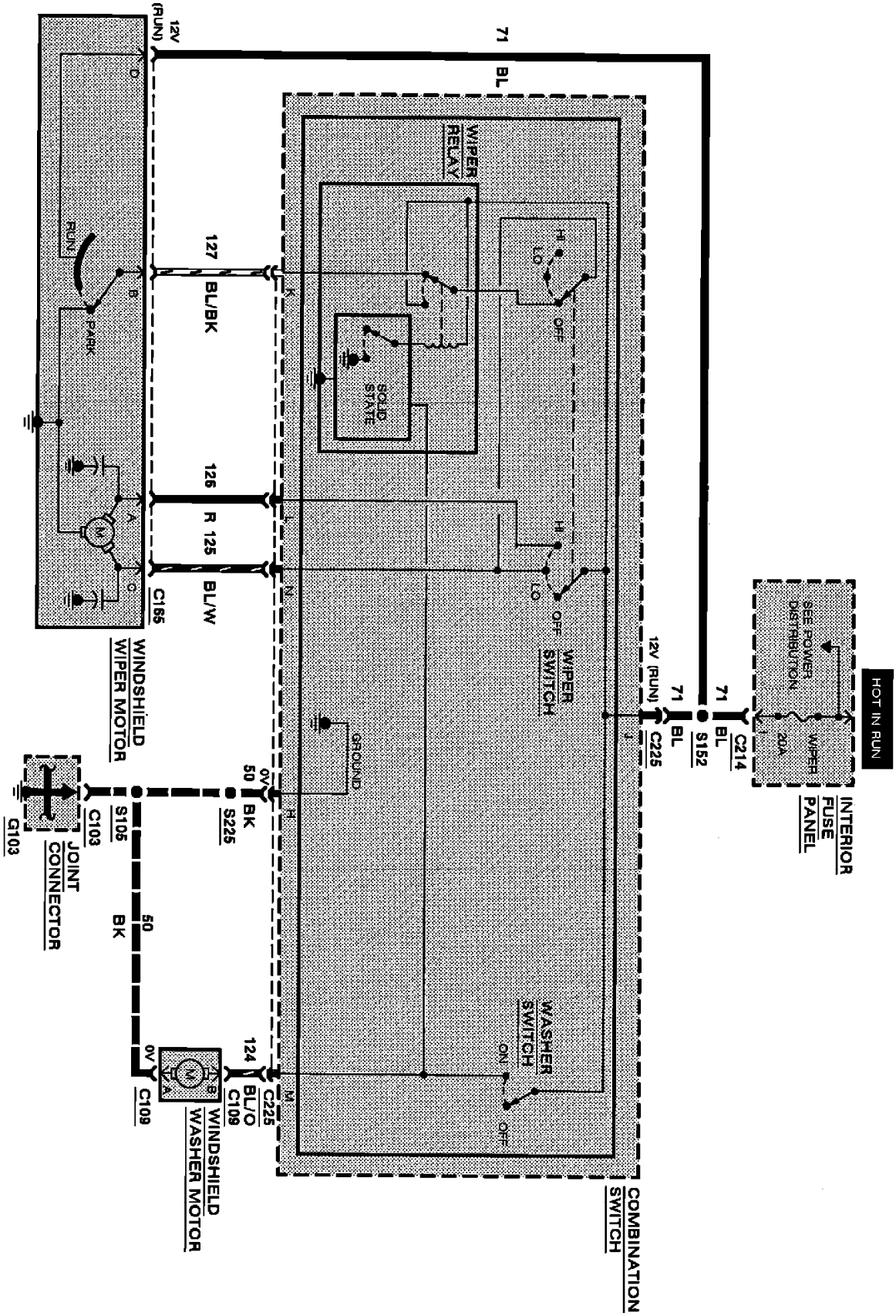

Wiper/Washer

1993 Ford Probe L4-121 2.0L DOHC VIN A MFI

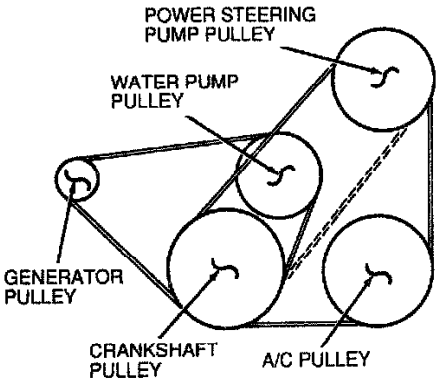

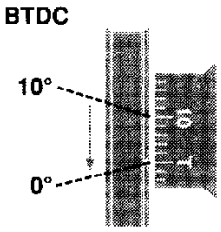

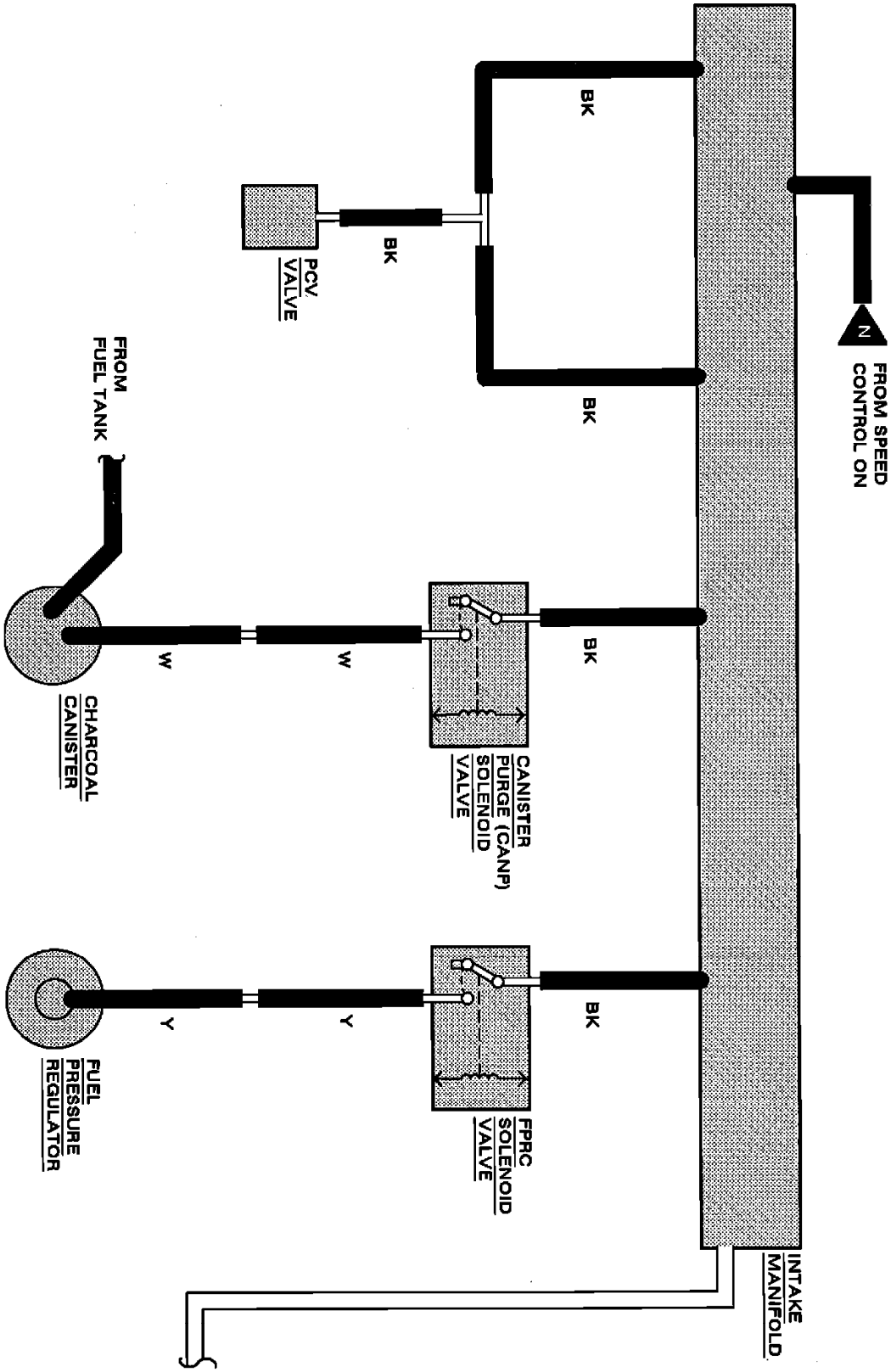

Vacuum Distribution

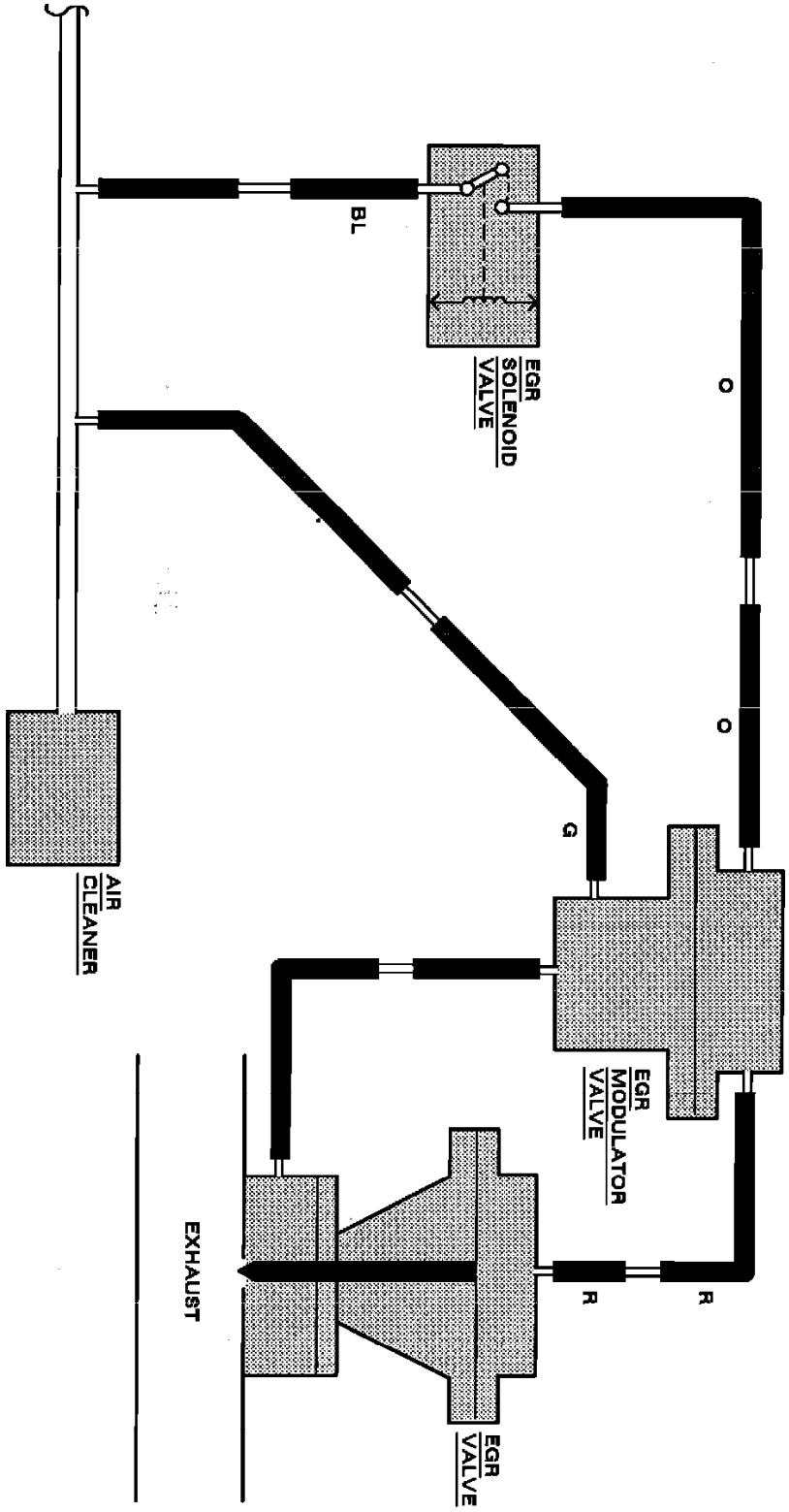

Vacuum Distribution

A/CL BI-MET — AIR CLEANER BI-METAL SENSOR	CC — CARBON CANISTER	PCV — PCV FLOW CONTROL VALVE	V-CBV — VACUUM BOWL VENT VALVE OR VACUUM/THERMO. BOWL VENT VALVE
A/CL CWM — COLD WEATHER MODULATOR (IN AIR CLEANER)	CPRV — CANISTER PURGE SOLENOID	PURGE CV — CANISTER PURGE CONTROL VALVE	VCKV — VACUUM CHECK VALVE
A/CL DV — AIR INLET DOOR VACUUM MOTOR (ON SNORKEL)	DIST — DISTRIBUTOR (VACUUM ADVANCE)	REG — BACKPRESSURE VARIABLE TRANSDUCER (BVT)	VCV 2-PORT; VCV 3-PORT; VCV 4-PORT — PORTED VACUUM SWITCH (PVS)
ACV — THERMACTOR AIR CONTROL VALVE	EFCA — FUEL CHARGING ASSEMBLY	SA-FV — FUEL-VACUUM SEPARATOR	
AIR BPV — THERMACTOR AIR BYPASS VALVE (DIFFERENTIAL WITHOUT VACUUM VENT)	EGR — EXHAUST GAS RECIRCULATION VALVE	SOL V — SOLENOID VACUUM VALVE (NORMALLY CLOSED)	VDV — VACUUM DELAY VALVE
AIR BPV AIR BPV — THERMACTOR AIR BYPASS VALVE (DIFFERENTIAL WITH VACUUM VENT)	EVR — ELECTRONIC VACUUM REGULATOR	SOLV SOL V — SOLENOID VACUUM VALVE (NORMALLY OPEN)	VRDV — VACUUM RETARD DELAY VALVE
ACV — THERMACTOR DIVERTER VALVE	HCV — EXHAUST HEAT CONTROL VALVE	SV-CBV — FUEL BOWL SOLENOID	VRESER — VACUUM RESERVOIR
AIR BPV — THERMACTOR AIR BYPASS VALVE (NON-DIFFERENTIAL)	IVV VAC — THERMACTOR IDLE VACUUM VALVE	TVS — TEMPERATURE VACUUM SWITCH	VREST — VACUUM RESTRICTOR
BVT — BACKPRESSURE VARIABLE TRANSDUCER	LCV — LOAD CONTROL VALVE (WOT VALVE)	TVV — THERMAL BOWL VENT VALVE	VRV — VACUUM REGUALTOR VALVE
CARB — CARBURETOR	MAN VAC — MANIFOLD VACUUM FITTING	VAC IVV — THERMACTOR IDLE VACUUM VALVE	VVVAC OR VACVV-D — VACUUM VENT VALVE

Vacuum And Vapor Hose Schematic Symbols

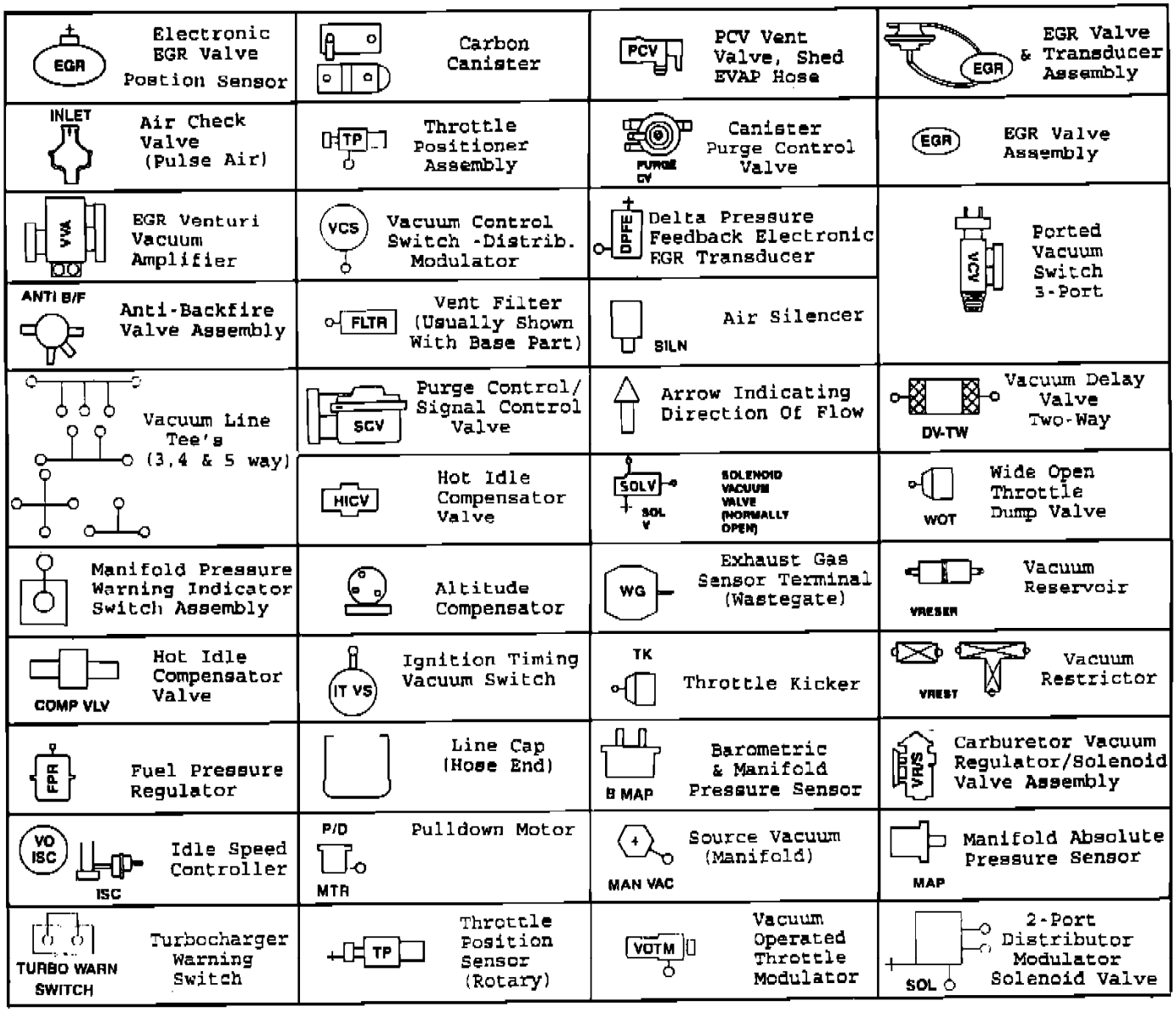

Vacuum And Vapor Hose Schematic Symbols

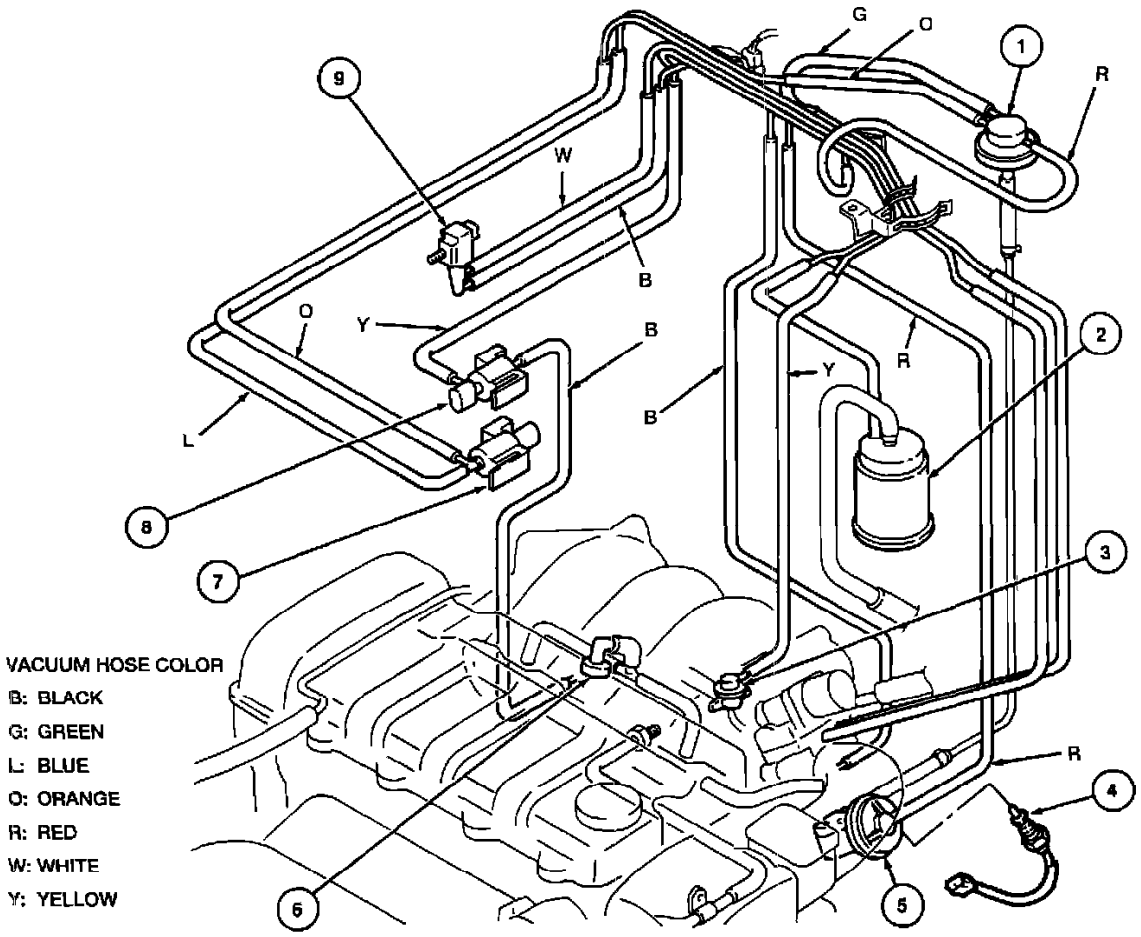

Item	Description
1	EGR Back-Pressure Variable Transducer (BVT)
2	Carbon Canister
3	Fuel Pressure Regulator
4	EGR Temperature Sensor (California Only)
5	EGR Valve
6	PCV Valve
7	Exhaust Gas Recirculation Control (EGRC) Solenoid
8	Fuel Pressure Regulator Control (FPRC) Solenoid
9	Canister Purge Regulator Valve

Vacuum Diagram

A/CL BI-MET — AIR CLEANER BI-METAL SENSOR	CC — CARBON CANISTER	PCV — PCV FLOW CONTROL VALVE	V-CBV — VACUUM BOWL VENT VALVE OR VACUUM/THERMO. BOWL VENT VALVE
A/CL CWM — COLD WEATHER MODULATOR (IN AIR CLEANER)	CPRV — CANISTER PURGE SOLENOID	PURGE CV — CANISTER PURGE CONTROL VALVE	VCKV — VACUUM CHECK VALVE
A/CL DV — AIR INLET DOOR VACUUM MOTOR (ON SNORKEL)	DIST — DISTRIBUTOR (VACUUM ADVANCE)	REG — BACKPRESSURE VARIABLE TRANSDUCER (BVT)	VCV 2-PORT; VCV 3-PORT; VCV 4-PORT — PORTED VACUUM SWITCH (PVS)
ACV — THERMACTOR AIR CONTROL VALVE	EFCA — FUEL CHARGING ASSEMBLY	SA-FV — FUEL-VACUUM SEPARATOR	
AIR BPV — THERMACTOR AIR BYPASS VALVE (DIFFERENTIAL WITHOUT VACUUM VENT)	EGR — EXHAUST GAS RECIRCULATION VALVE	SOL V — SOLENOID VACUUM VALVE (NORMALLY CLOSED)	VDV — VACUUM DELAY VALVE
AIR BPV AIR BPV — THERMACTOR AIR BYPASS VALVE (DIFFERENTIAL WITH VACUUM VENT)	EVR — ELECTRONIC VACUUM REGULATOR	SOLV SOL V — SOLENOID VACUUM VALVE (NORMALLY OPEN)	VRDV — VACUUM RETARD DELAY VALVE
ACV — THERMACTOR DIVERTER VALVE	HCV — EXHAUST HEAT CONTROL VALVE	SV-CBV — FUEL BOWL SOLENOID	VRESER — VACUUM RESERVOIR
AIR BPV — THERMACTOR AIR BYPASS VALVE (NON-DIFFERENTIAL)	IVV VAC — THERMACTOR IDLE VACUUM VALVE	TVS — TEMPERATURE VACUUM SWITCH	VREST — VACUUM RESTRICTOR
BVT — BACKPRESSURE VARIABLE TRANSDUCER	LCV — LOAD CONTROL VALVE (WOT VALVE)	TVV — THERMAL BOWL VENT VALVE	VRV — VACUUM REGUALTOR VALVE
CARB — CARBURETOR	MAN VAC — MANIFOLD VACUUM FITTING	VAC IVV — THERMACTOR IDLE VACUUM VALVE	VVVAC OR VACVV-D — VACUUM VENT VALVE

Vacuum And Vapor Hose Schematic Symbols

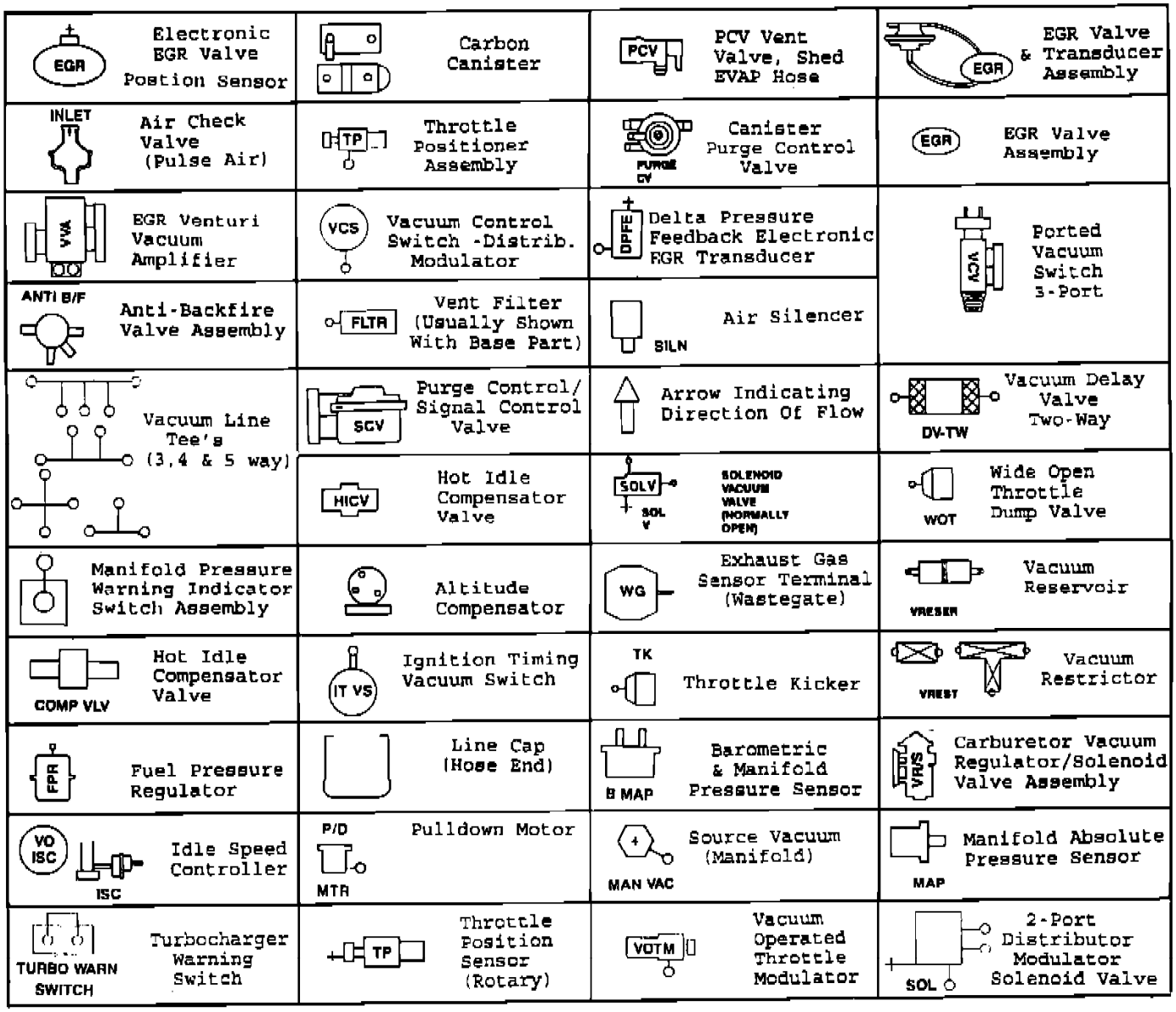

Vacuum And Vapor Hose Schematic Symbols

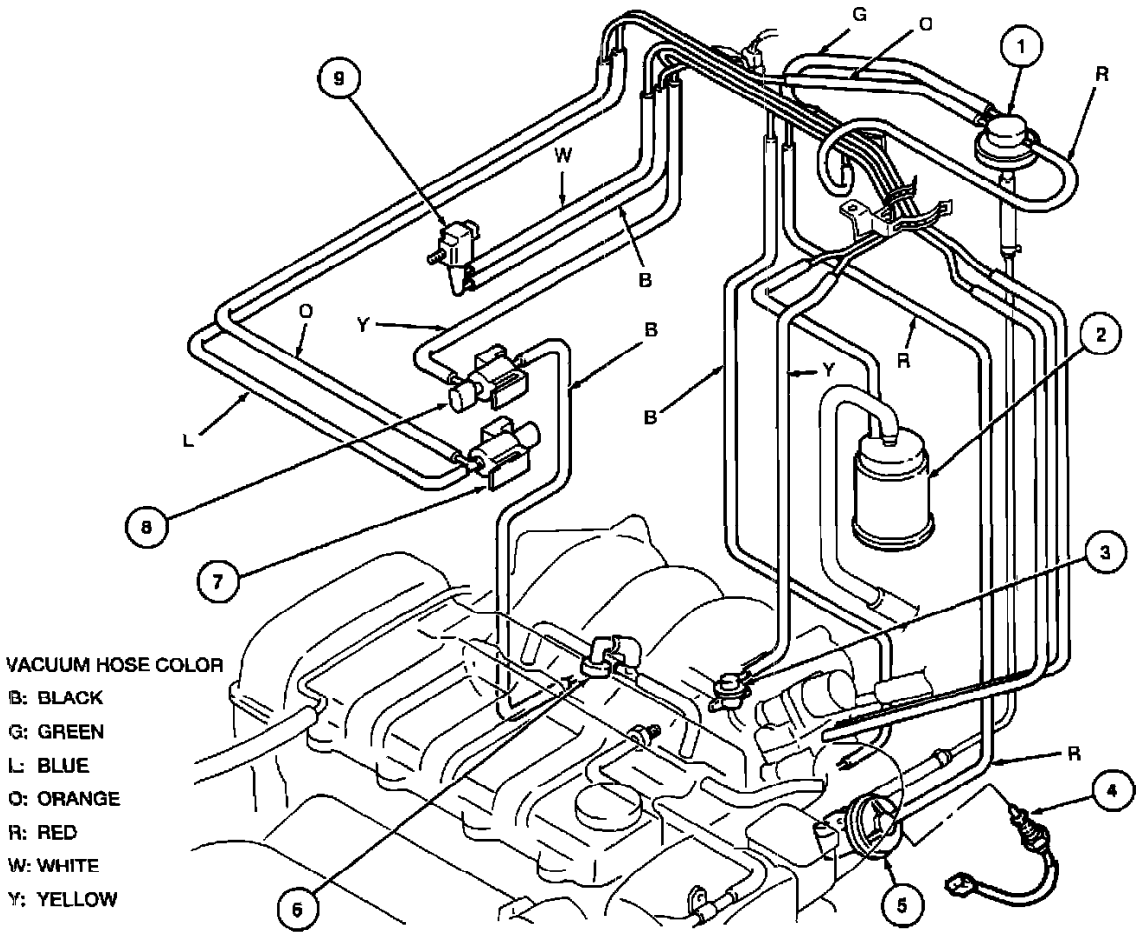

Item	Description
1	EGR Back-Pressure Variable Transducer (BVT)
2	Carbon Canister
3	Fuel Pressure Regulator
4	EGR Temperature Sensor (California Only)
5	EGR Valve
6	PCV Valve
7	Exhaust Gas Recirculation Control (EGRC) Solenoid
8	Fuel Pressure Regulator Control (FPRC) Solenoid
9	Canister Purge Regulator Valve

Vacuum Diagram

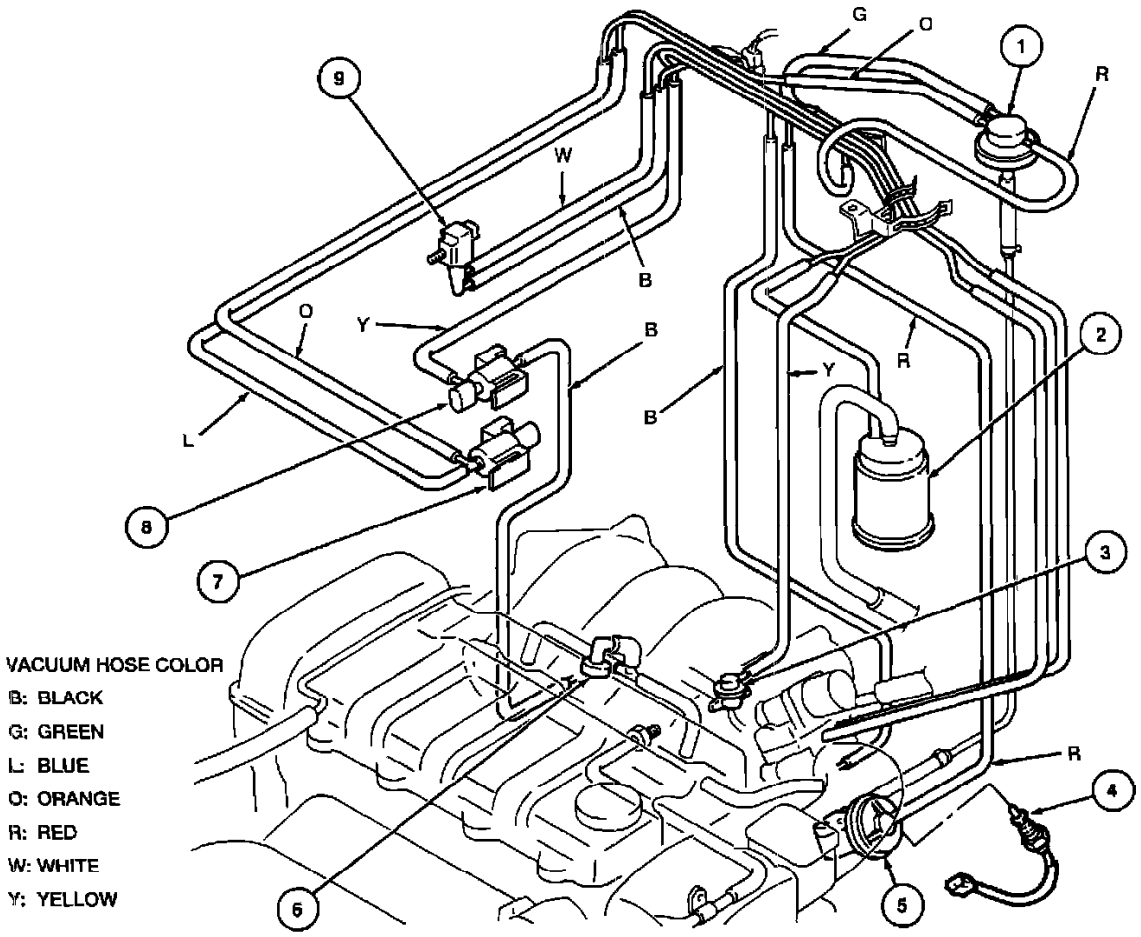

Item	Description
1	EGR Back-Pressure Variable Transducer (BVT)
2	Carbon Canister
3	Fuel Pressure Regulator
4	EGR Temperature Sensor (California Only)
5	EGR Valve
6	PCV Valve
7	Exhaust Gas Recirculation Control (EGRC) Solenoid
8	Fuel Pressure Regulator Control (FPRC) Solenoid
9	Canister Purge Regulator Valve

Vacuum Diagram

Computers and Control Systems: Testing and Inspection

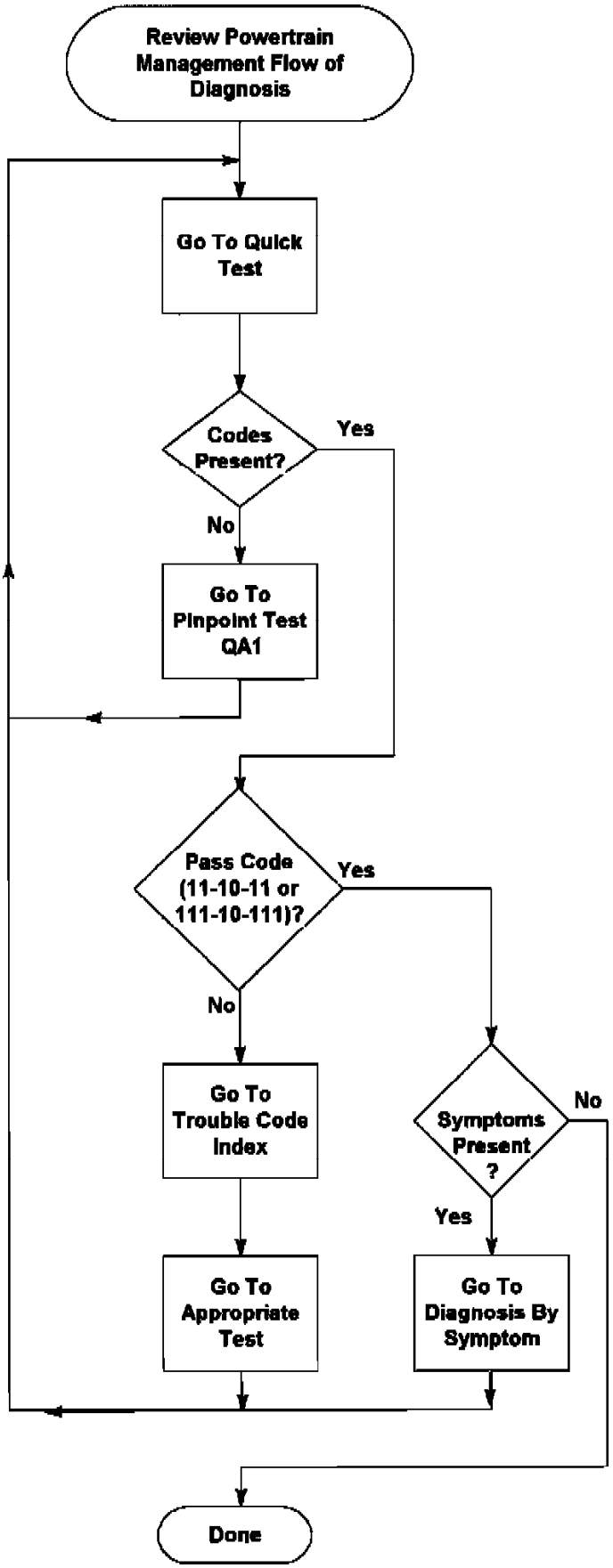

EEC Quick Test Flowchart With Manual Transaxle

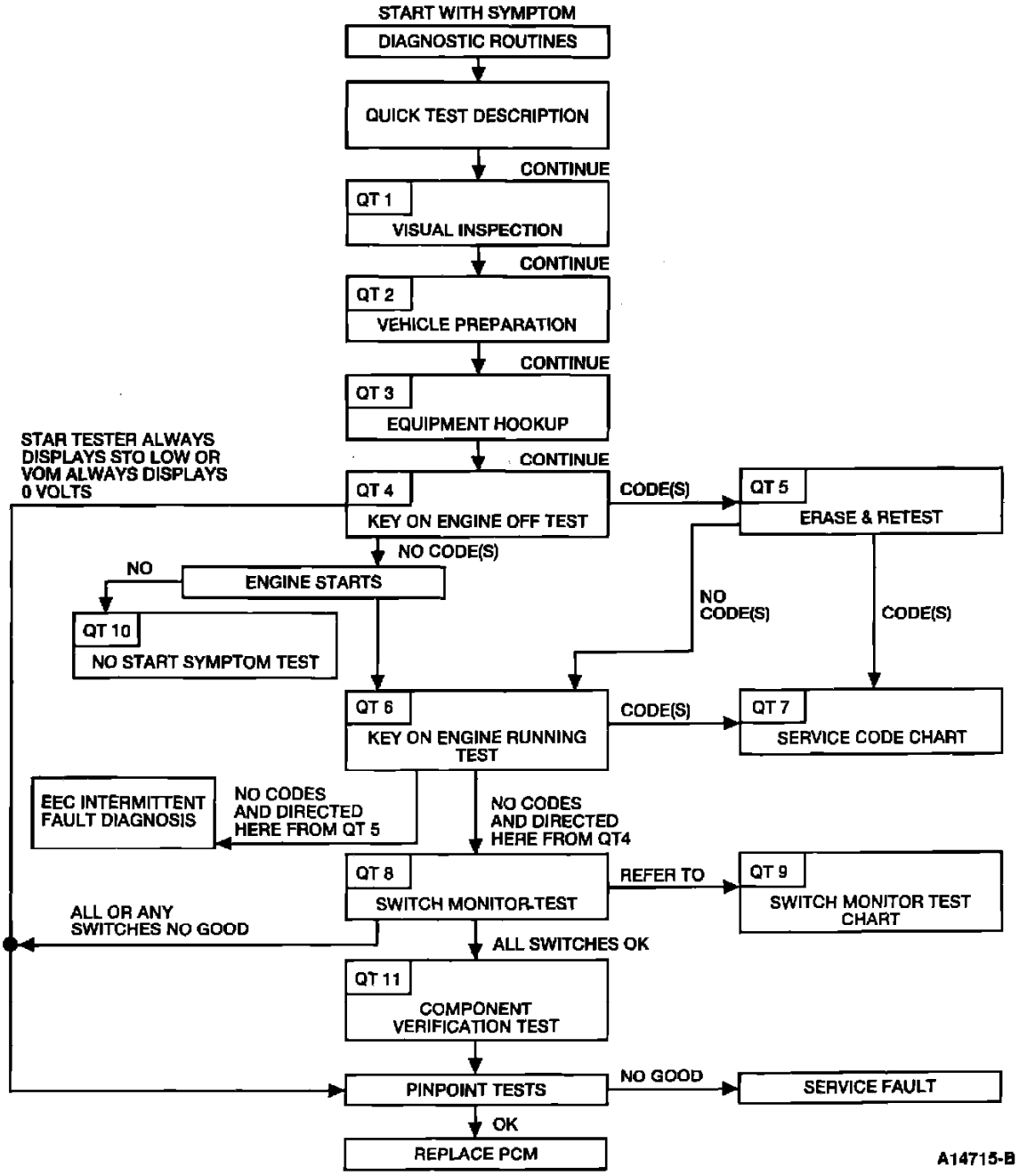

EEC Quick Test Flowchart With Automatic Transaxle

How Do I Tell Which EEC System I Have?

For All Probe 2.0L with **Automatic** Transmission refer to the **OBD I-B** system. See: Symptom Related Diagnostic Procedures/With EEC IV (OBD I-B System)

For All Probe 2.0L with **Manual** Transmission refer to the **OBD I-A** system. See: Symptom Related Diagnostic Procedures/With EEC IV (OBD I-A System)

Testing Notes - Start Here

The technician should be aware that diagnosis and testing starts at Diagnosis by Symptom and is narrowed to testing of a "specific" subsystem and it's related wiring and components or to Computers and Control Systems / Testing and Inspection for additional diagnostic testing.

Following the appropriate diagnostic routines may prevent misdiagnosis and unnecessary component replacement. See: Symptom Related Diagnostic Procedures/With EEC IV (OBD I-A System)

Customer Information Worksheet

Repair Order No. _____

CUSTOMER NAME _____ DATE _____

PLEASE HELP US HELP YOU by checking all the spaces that describe the drive problem that brought you here today.

When did problem start to occur? __ suddenly __ gradually; approximate miles _____

Problem Description

Engine Starting Problems	Engine Quits Running Problems	Engine Idle Problems With The Vehicle Not Moving	Engine/Transmission Problems While The Vehicle Is Moving
__ Will Not Start - Will Not Even Crank __ Cranks But Will Not Start __ Tries To Start, But Won't __ Starts, But Takes A Long Time	Engine Quits: __ Right After Starting __ While Idling __ When Put Into Gear __ On Acceleration __ During Steady Speed Driving __ On Deceleration __ Right After the Vehicle Is Brought To A Stop __ When Parking	__ Engine Speed Is Too Slow All The Time __ Engine Speed Is Too Slow When The A/C Is On __ Engine Speed Is Too Fast __ Engine Speed Is Rough Or Uneven	__ Runs Rough __ Bucks and Jerks __ Hesitates/Stumbles On Acceleration __ Misfires - Cuts Out __ Engine Knocks or Rattles __ Lack of Power __ Backfires __ Poor Fuel Economy __ Transmission Shifting Concerns

About how often does the problem happen? __ All the time __ Most of the time __ Occasionally

When does the problem usually occur? __ Morning __ Later in the day __ Anytime

About how long after starting the engine does the problem happen?
__ Within 2 minutes of starting the engine.
__ Between 2 and 10 minutes after the engine starts.
__ At least 10 minutes or longer after starting the engine.
__ It could happen any time after starting the engine.

About how long does the engine have to be off before the problem will happen again?
__ 4 hours or more.
__ More than 30 minutes but less than 4 hours.
__ Less than 30 minutes of being turned off.
__ It does not matter how long the engine was off.

Do weather conditions affect the problem? __ No __ Yes
If yes, which ones? __ Hot __ Cold __ Rain __ Fog __ Snow __ Humid __ Dry
Does outside temperature affect the problem? __ No __ Yes
If yes, what temperature? ____ °F

Please check any of these driving conditions that cause the problem. __ Accelerating __ Decelerating __ Turning Right/Left __ Steady Speed (approximate vehicle speed _____ MPH)

Type of fuel used? __ Regular unleaded __ Premium unleaded __ Gasohol __ Other

Was The Check Engine Light On? __ Yes __ No __ Flashing

Were Other Warning Lights On? __ Yes __ No __ Flashing Which Ones? _____

Additional Comments:

_____

_____

_____

_____

Please use the back of this sheet if needed.

Customer Information Worksheet

Verifying Customer Complaint

COMPLAINT VERIFICATION

Whenever possible, the technician should personally verify the complaint. Having experienced the malfunction, the technician is less likely to repair non-existent faults.

MALFUNCTION VERIFICATION

Today's sophisticated automotive systems are easily misunderstood, which can lead to repairs that attempt to force a particular system to perform in a way that it was never intended to operate. Therefore, the troubleshooting technician should compare the system operation to the nominal system operation.

PREVIOUS REPAIRS

Vehicle repair history can provide explanations to unusual complaints that seem to elude normal troubleshooting attempts. Incorrect components or unapproved repairs can have subtle influences on seemingly unrelated systems.

Checking the Basics

CHECKING THE BASICS

All troubleshooting must begin by **"Checking the Basics"**. Certain basic faults can be undetectable by the self-diagnostic systems of the fuel and ignition control units and in some cases can actually interfere with the self-checking and fault memory operation.

Fault codes should be retrieved at this time. This will prevent loss of codes in the event of power disruption to the control module, or similar event that could cause loss of codes.

Prior to any teardown, repair or component replacement, the following steps should always be considered:

Battery State of Charge
Batteries in a state of partial discharge can have a dramatic effect on control units and related components.

Positive Battery Cable Integrity
All positive electrical connections must be in perfect condition for trouble-free electronic system operation.

Fuse Integrity
Fuses are employed to prevent possible damage to electrical components and wiring harnesses. The fuses and their connections must be without dynamic resistance. Dynamic resistance can only be checked using the voltage drop method of testing.

Negative Ground Connections
As all electrical circuits are a circle, all negative battery connections must also be checked and verified to be in perfect condition. A poor "common" ground point will cause seemingly unrelated systems to influence one another. High current systems which encounter a poor "common" ground can back feed through other electrical systems causing unusual operation and perhaps premature component failure. As with the positive side of the electrical system, the ground side should be checked dynamically using the voltage drop technique.

Powertrain Cable Attachments
Metal cables attached to the engine or transmission that appear overheated and/or discolored indicate the need to thoroughly test all ground connections.

Power Supply Relays
The system relay as well as its plug connection can be a source of intermittent operation which will not set a fault in control unit fault memory.

Vehicle Sensors
Sensors should be checked statically and dynamically. Physical mounting and condition of the sensor must be assured.

Ignition System
The ignition primary and secondary systems should be inspected for loose connections, damaged insulation, moisture, and corrosion.

Fuel Delivery
Fuel delivery must begin at once when cranking and the pressure in the fuel rails must be within specifications. Fuel pressure retention must be maintained between the fuel pump outlet and the pressure regulator after engine shutdown.

Air/Fuel Ratio
When troubleshooting idle quality or driveability complaints, it is necessary to consider the following:

- Presence of unmetered air leaks
- Evaporative purge system
- Excessive engine oil dilution
- Color and odor of exhaust
- Condition of air and PCV filter
- Condition of air flow meter electrical connections

General Testing Description

The Powertrain Control Module (PCM) stores the self test program in its permanent memory. When activated, the EEC system checks and tests it's memory integrity and processing ability. The self test will verify various sensor and actuator connections and proper operation.

These tests are designed to:
- Test major subsystem elements
- Be used without special external test equipment
- Minimize manual diagnostic time

The self test is divided into three separate tests:
- Key On Engine Off (KOEO)
- Key On Engine Running (KOER)
- Continuous Self Test

The self test is not a conclusive test by itself, but is used as a part of the functional Quick Test diagnosis procedure.

Continuous Monitor Diagnostic Mode (Wiggle Test) Description

A special diagnostic aid is designed into the EEC-IV system called the continuous monitor diagnostic mode (wiggle test). During either the Key On Engine Off (KOEO) or Key On Engine Running (KOER) tests the technician can enter the wiggle test. The wiggle test is designed to help isolate intermittent faults. The technician can accomplish this by wiggling the harness and LIGHTLY tapping suspected circuits or components when in the wiggle test mode. When a fault is found the Self-Test Output (STO) will be activated and a continuous fault code will be stored.

Computed Timing Check Description

The computed timing check verifies that the Powertrain Control Module (PCM) is controlling the spark advance.
The test is performed by STARTING the engine with the SPOUT connector disconnected, checking the base timing, installing the SPOUT connector with the engine running, and checking for timing advance.

Cylinder Balance Diagnostic Test Mode (SEFI Only) Description

The purpose of the cylinder balance test is to aid the technician in finding a weak cylinder. The test is entered by depressing and releasing the throttle within two minutes after the Key On Engine Running (KOER) self test codes have been outputted.
Once the test is entered, the idle speed control duty is fixed and the engine is allowed to stabilize. The engine speed is measured and stored for comparison with the other readings received later in the testing. Then the fuel is shut OFF to the last cylinder in the engine. After the engine speed stabilizes, the rpm is measured and stored. The injector is turned ON and the process is repeated for each cylinder. At this point, the maximum rpm drop is selected from the table of drops for each cylinder. This maximum drop is now multiplied by a calibrated precentage. The resulting number (rpm) is now used as the minimum rpm that each cylinder must have dropped to pass the test. (Example: 150 rpm x 65% = 98 rpm).
If all cylinders drop at least this amount, then a code 90 is output indicating a pass. No further testing is necessary. If a cylinder did not drop at least this amount, then the cylinder number will be output. (Example: 30 is output for cylinder #3). This indicates that cylinder 3 is weak or non-contributing.
The test can now be repeated a second time if the throttle is depressed and released within two minutes of the last code output. This time the maximum rpm drop that occurs is multiplied by a lower percentage. This number is now used as the minimum rpm drop for each cylinder. (Example: 150 rpm x 43% = 65 rpm).
If all of the rpm drops are greater than 65 rpm, then a code 90 is output. If cylinder number 3 had failed the first level and passed the second, then cylinder 3 is considered to be weak. If cylinder 3 fails again, the code 30 will be output again.
This test can be repeated a third time by depressing and releasing the throttle within two minutes of the last code output. This time the maximum rpm drop that results is multiplied by a still lower percentage. This number is now used as the minimum rpm drop for each cylinder to pass this test. (Example: 150 rpm x 20% = 30 rpm).
If all of the rpm drops are greater than 30 rpm, then a code 90 is output. If cylinder number 3 had failed the previous two levels, but passed the third, then it is considered to be a very weak cylinder. If cylinder 3 again fails the test, then a code 30 is again output. In this case, cylinder 3 is considered a non-contributing cylinder.
The cylinder balance test may be repeated as many times as desired by depressing and releasing the throttle within two minutes of the last code output. All further testing will be done using the third percentage level.

Output State Diagnostic Test Mode (DTM) Description

The output state diagnostic test mode aids in servicing the output actuators associated with the Electronic Engine Control (EEC-IV) system. It enables the technician to ENERGIZE and DE-ENERGIZE most of the system output actuators on command. This mode is entered after all codes have been outputted during the Key On Engine Off (KOEO) and continuous testing. At this time, leave the self test activated and go to wide open throttle. Each time the throttle is depressed, the actuators will change state (ON/OFF). This procedure generally is used only when called for in one of the pinpoint tests to determine if an actuator is operating properly.

Key On Engine Off (KOEO) Self Test Description

The Key On Engine Off (KOEO) portion of the self-test looks for normal engine OFF sensor readings. Any sensor that is out of limits, open, or shorted will set an on-demand or hard fault code. If all sensors are within expected ranges, a code 11 will be displayed. Codes are repeated to make it easier for the technician to verify the code sequence. After the hard fault codes, a single pulse (displays as a 10) occurs to signal that the next set of codes will be from the continuous test.
The continuous self-test monitors sensor inputs during normal operation, and stores information in a special memory called Keep Alive Memory (KAM) when errors are detected. Generally, checks are made only for open or shorted circuits. In a few cases, improper sensor readings are noted. For example, if a coolant temperature sensor should change from cold to hot to cold in too short a period of time, an error is noted. When the number of errors in a given time period exceeds a pre-determined number, that code is stored in KAM. This means that the error will have to be seen several times by the computer before it will register. This helps prevent codes from being incorrectly set on components that are actually good. Codes indicating faults that have not occurred in 40-80 engine warm-up cycles are automatically erased from KAM. Continuous fault codes can also be manually erased by opening the STI circuit while codes are being displayed. Continuous test codes are issued using the same format as the hard fault codes, and are also repeated.
Finally the test enters the output state test, which simply activates the actuator outputs ON and OFF based on requests from the person performing the test.

Key On Engine Running (KOER) Self Test Description

The Key On Engine Running (KOER) portion of the quick test indicates that it has started by sending an engine identification code. It then tests inputs and EEC-IV controlled functions by forcing various conditions and looking for expected engine responses. A single output pulse (displayed as a code 10) is sent as a signal to goose the throttle, during which inputs are tested for dynamic response. If no rpm change is detected, a special code (77) is sent to indicate that the test was incorrectly performed. When the goose test has been completed, fault (on-demand/hard) codes will be displayed. On some models, the technician is required to turn the steering wheel and depress the brake pedal after the engine ID code is displayed.

Required Equipment

1993 Ford Probe L4-121 2.0L DOHC VIN A MFI

The following equipment is required to diagnose and repair the Electronic Engine Control (EEC-IV) system:

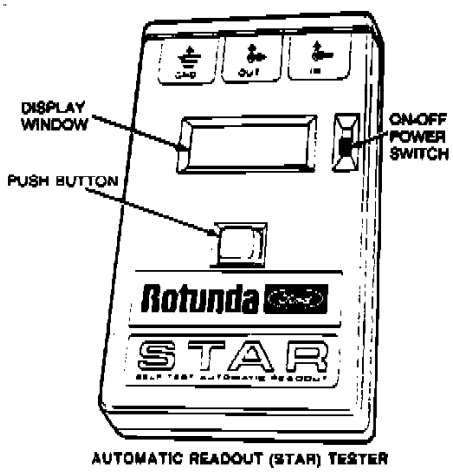

Self Test Automatic Readout (STAR) Tester

Self Test Automatic Readout (STAR) Tester (Rotunda 007-00004, or equivalent)

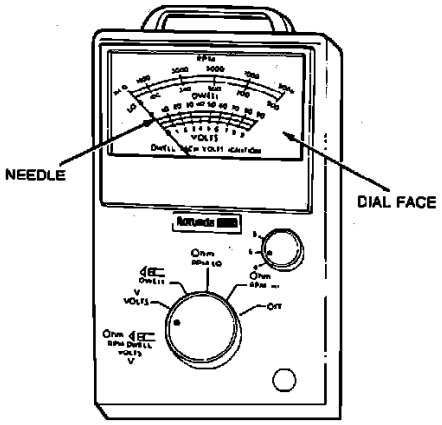

Analog Volt/Ohm Meter

Analog Voltmeter (If STAR tester not available)

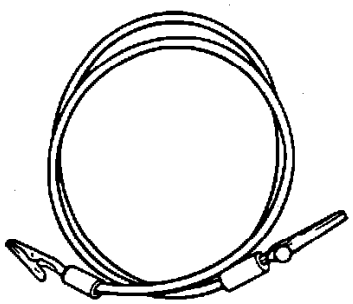

Jumper Wire

Jumper Wires

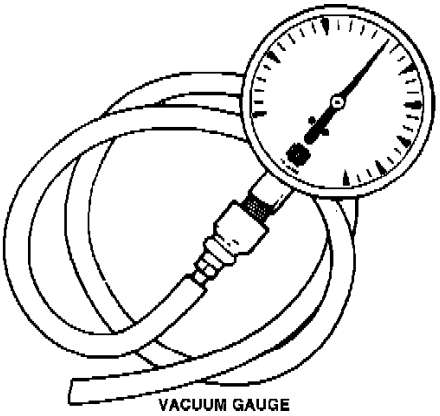

Vacuum Gauge

Vacuum Gauge (Rotunda 059-00008, or equivalent)

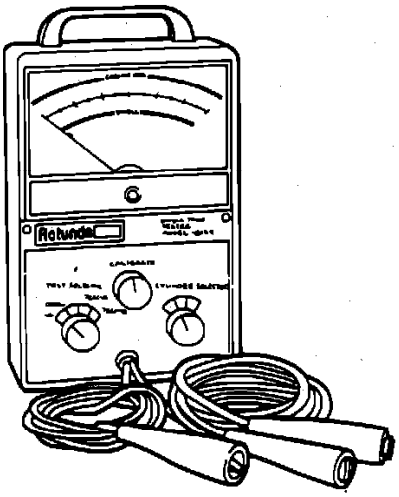

Tachometer

Tachometer (Rotunda 059-00010, or equivalent)

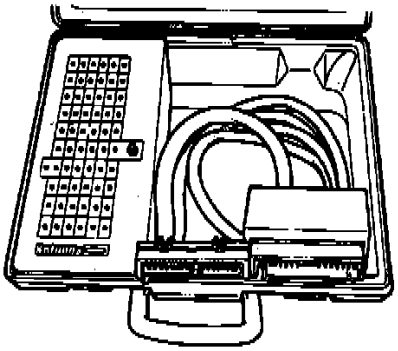

Breakout Box

Breakout Box (Rotunda 014-00322, or equivalent)

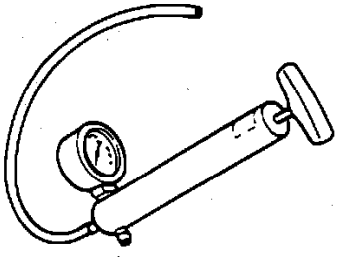

Vacuum Pump

Vacuum Pump (Rotunda 021-00014, or equivalent)

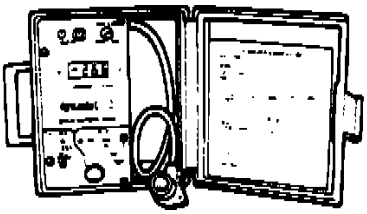

Digital Volt-Ohmmeter (DVOM)

Digital Volt-Ohm Meter (DVOM) (Rotunda 014-00407, or equivalent)

Optional Equipment

The following equipment is optional, but helpful, in diagnosing and repairing the Electronic Engine Control (EEC-IV) system.

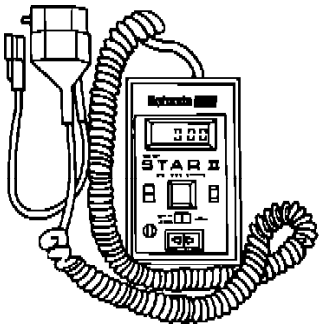

Super Star II Tester

Super STAR II Tester (Rotunda 007-00028, or equivalent)

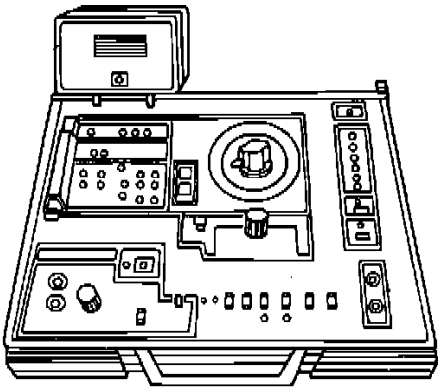

EEC-IV Monitor Box

EEC-IV Monitor Box (Rotunda 007-00018, or equivalent)

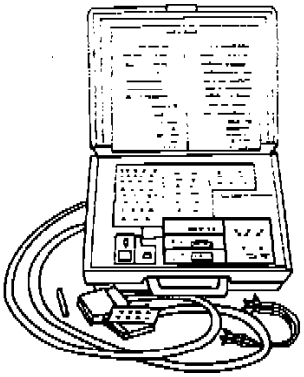

EEC-IV Monitor Recorder

EEC-IV Monitor Recorder (Rotunda 007-00021, or equivalent)

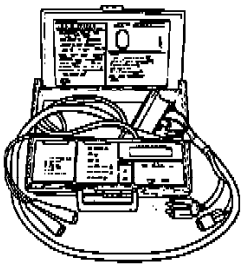

Integrated Relay Controller Module Tester

Integrated Relay Controller Module Tester (Rotunda 007-00050, or equivalent)

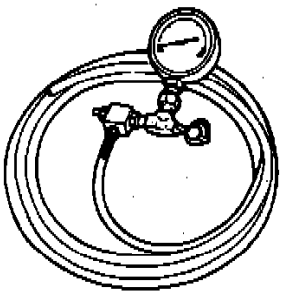

EFI Pressure Gauge

EFI Pressure Gauge (Ford T80L-9974-A, or equivalent)

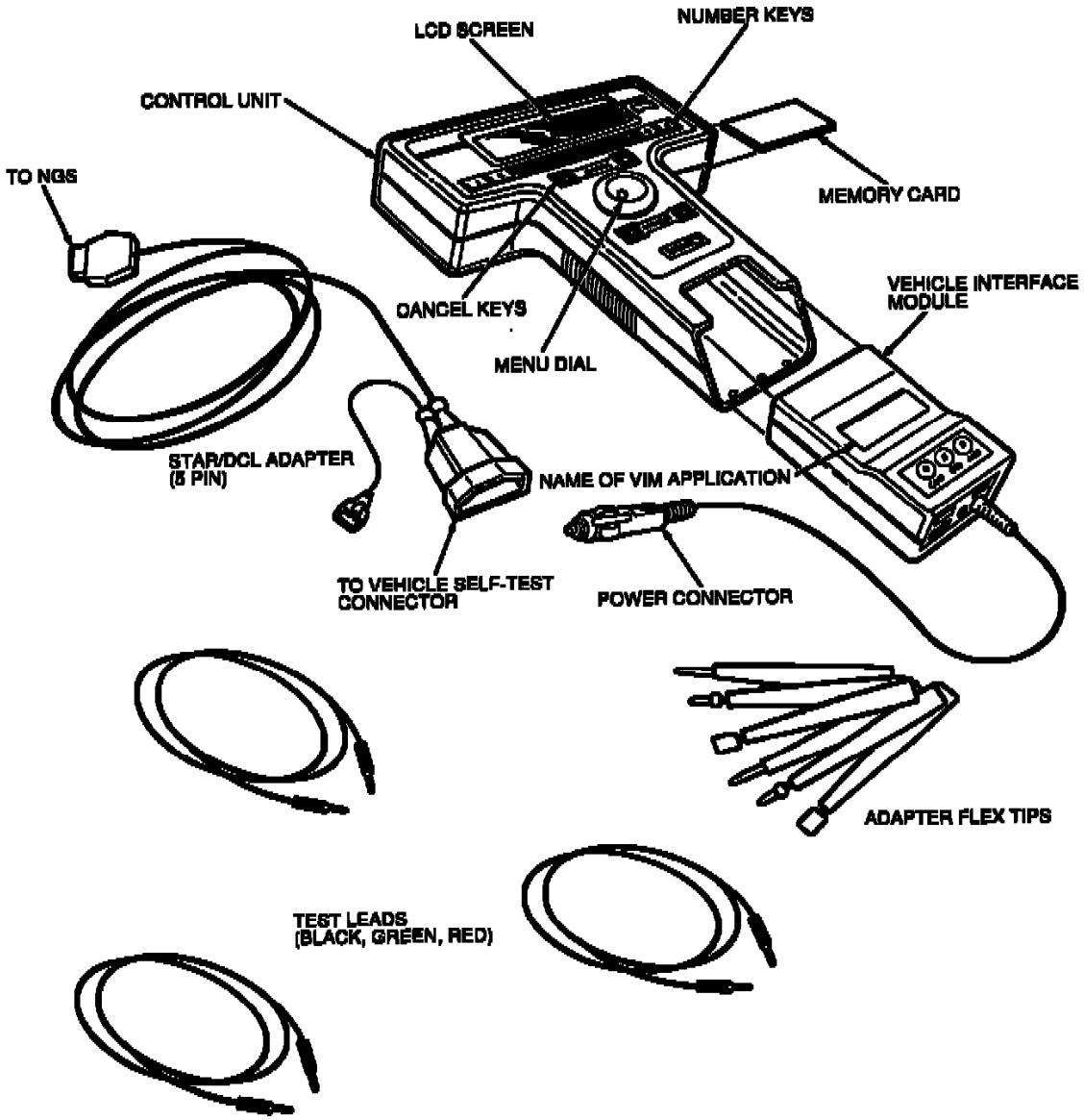

New Generation STAR (NGS) Scan Tool

New Generation STAR (NGS) Scan Tool (Rotunda 007-00500)

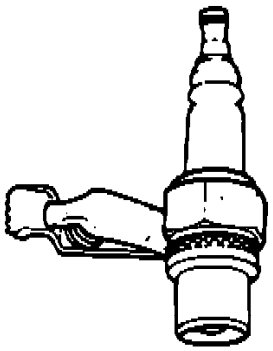

Spark Tester

Spark Tester (Ford D81P-6666-A, or equivalent)

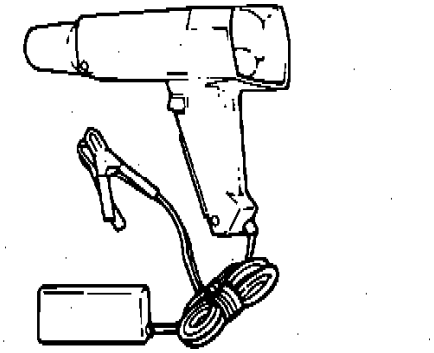

Timing Light (Rotunda 059-00006, or equivalent)

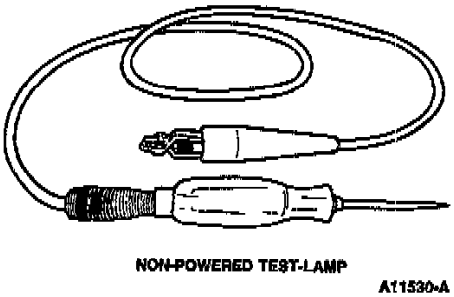

Non-Powered Test Light

Analyzing Data

Once the road test is completed, the results need to be analyzed to find and correct the exact fault that caused the problem.

INSIGHTS FROM THE RECORDER

The use of the recorder greatly enhances the view of the EEC-IV operation when the fault occurs and allows for a systems approach to the problem.
Look for abnormal behavior or values that are clearly incorrect. Inspect the signals for abrupt or unexpected changes. For example, during a steady cruise, most of the sensor values should be fairly stable. Signals such as the Throttle Position **(TP)**, Manifold Absolute Pressure **(MAP)**, and engine rpm changing abruptly during a steady cruise are clues to correcting the problem.
Look for agreement in related signals. For example, if the TP signal changes during gentle acceleration, a corresponding change should occur in MAP, rpm, and ignition timing signals.
Make sure that the signals act in proper sequence. An increase in rpm after the TP signal is increased is expected. However, if the rpm increases without a TP signal change, then a problem may exist.

ANALYZING METHODS

Use any of the following methods to further diagnose a suspected EEC-IV signal or device. Some methods pertain to a certain type of EEC-IV device. Follow the given strategy listed for each type of EEC-IV signal. Refer to **EEC-IV MONITOR MEASUREMENT METHODS** for more details.

Analyzing Data: Suggested Strategies for Sensors/Inputs

2 Wire Sensors

Device:

ACT
ECT
EGRT
TOT

Typical Schematic:

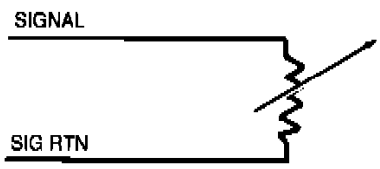

Strategy:

Check Value — Cold
Check Value — Warm
Wiggle Testing (DCV)
EEC-IV Input Check (STO)
Harness Shorts
Harness Opens

3 Wire Sensors

Device:

EVP
PFE
TP

Typical Schematic:

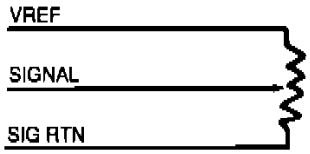

Strategy:

Check Value
Change Condition
Wiggle Testing (DCV)
EEC-IV Input Check (STO)
Harness Shorts
Harness Opens

Switches

Device:

ACC	HDL
ACCS	NDS
ACD	NGS
ACON	OCS
BLR	OCT ADJ
BOO	PSPS
CES	SCCS
DEF	4x4L

Typical Schematic:

Strategy:

Check Value
Change Condition
Wiggle Testing (DCV)
Harness Shorts
Harness Opens

Analyzing Data

Other Input Signals

Device:

BP	PIP
CID	PSOM
DPI	RPMS
FPM	STI
HEGO	VRS
IDM	VSS+
KS	TSR
MAF	TSOD
MAP	TSD
MLPS	TSL
OSS	TSS

Typical Schematic:

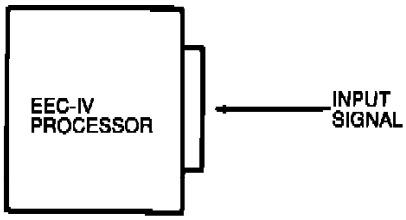

Strategy:

Check Value
Change Condition
*Wiggle Testing (DCV or ohms)
Input Check (STO)
Harness Shorts
Harness Opens

***Note: Applies only to BP, MAF, and MAP.**

Analyzing Data

Solenoids/Relays

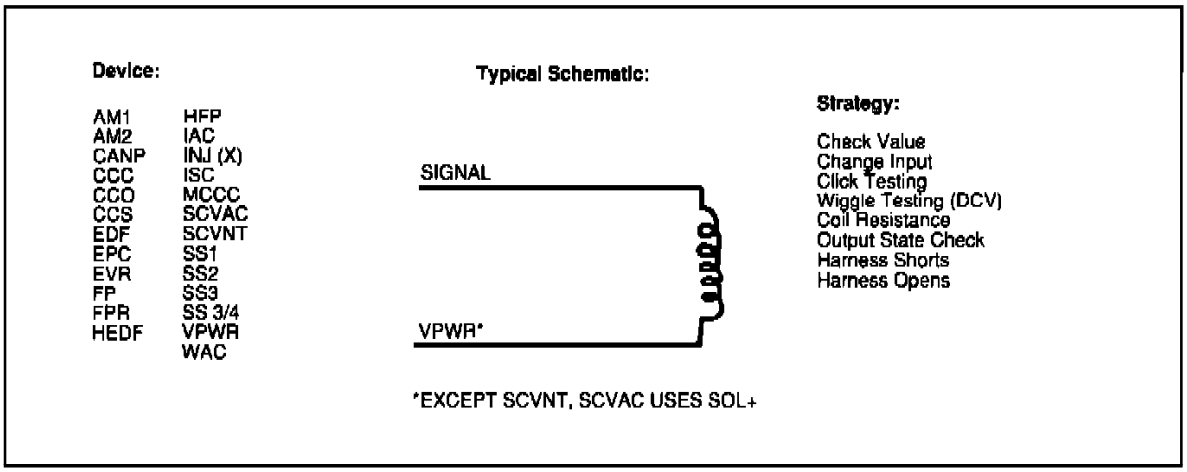

Other Output Signals

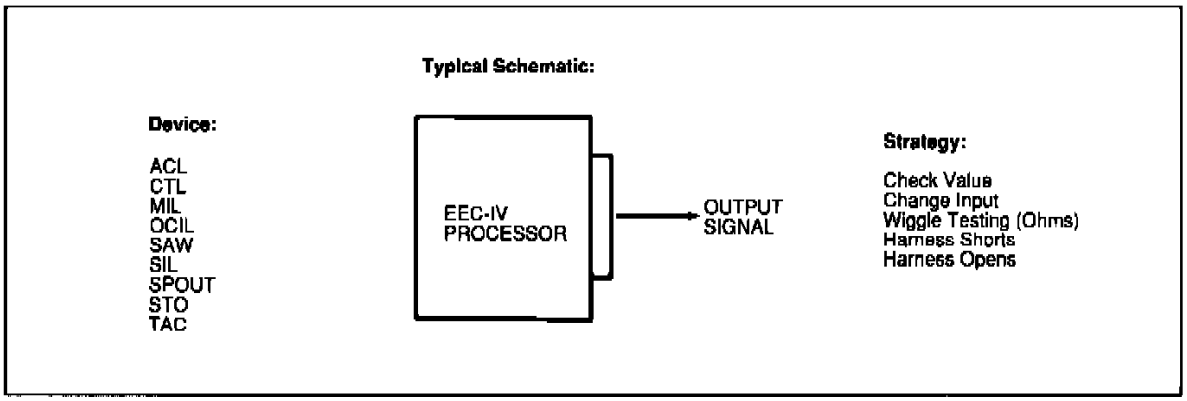

Analyzing Data

Initial Inspection

Perform thorough underhood inspection. Problems can frequently be resolved at this stage without further testing. Visually inspect the following:

- Vacuum hoses for proper routing, tight connections, splits, kinks, obvious tampering.
- Vacuum fittings for improperly capped or plugged ports. Be sure to check hidden areas around the throttle body and other components..

  NOTE: Some manufacturers use an orifice-insert within a vacuum line as a delay device. Do not mistake such a device for tampering and remove it.
- Electronic Engine Control system wiring harness for proper connections, bent or broken pins, corrosion, loose wires, and proper routing.
- Ignition wires for proper routing, cracking, hardness, and tight connections at distributor, coil, and spark plugs.
- Electrical wiring and harness connections for tight fit, abrasions, breaks, etc. Ground connections must be clean and tight.
- Verify that components are properly installed and have not been modified or damaged. Ensure that any replaced components are correct for the application.
- Check for air or vacuum leaks around intake and exhaust manifolds, throttle body, air flow meter, and air induction hoses.
- Catalytic converter(s), muffler, exhaust pipes, brackets, and hangers for modification or damage.
- Engine coolant for proper level and mixture.
- Transmission fluid level and quality.
- Engine oil for proper level and quality.

Testing Notes - Start Here

The technician should be aware that diagnosis and testing starts at Diagnosis by Symptom and is narrowed to testing of a "specific" subsystem and it's related wiring and components or to Computers and Control Systems / Testing and Inspection for additional diagnostic testing.

Following the appropriate diagnostic routines may prevent misdiagnosis and unnecessary component replacement. See: Symptom Related Diagnostic Procedures/With EEC IV (OBD I-B System)

Customer Information Worksheet

Repair Order No. _____

CUSTOMER NAME _____ DATE _____

PLEASE HELP US HELP YOU by checking all the spaces that describe the drive problem that brought you here today.

When did problem start to occur? __ suddenly __ gradually: approximate miles _____

Problem Description

Engine Starting Problems	Engine Quits Running Problems	Engine Idle Problems With The Vehicle Not Moving	Engine/Transmission Problems While The Vehicle Is Moving
__ Will Not Start - Will Not Even Crank __ Cranks But Will Not Start __ Tries To Start, But Won't __ Starts, But Takes A Long Time	Engine Quits: __ Right After Starting __ While Idling __ When Put Into Gear __ On Acceleration __ During Steady Speed Driving __ On Deceleration __ Right After the Vehicle Is Brought To A Stop __ When Parking	__ Engine Speed Is Too Slow All The Time __ Engine Speed Is Too Slow When The A/C Is On __ Engine Speed Is Too Fast __ Engine Speed Is Rough Or Uneven	__ Runs Rough __ Bucks and Jerks __ Hesitates/Stumbles On Acceleration __ Misfires - Cuts Out __ Engine Knocks or Rattles __ Lack of Power __ Backfires __ Poor Fuel Economy __ Transmission Shifting Concerns

About how often does the problem happen? __ All the time __ Most of the time __ Occasionally

When does the problem usually occur? __ Morning __ Later in the day __ Anytime

About how long after starting the engine does the problem happen?
__ Within 2 minutes of starting the engine.
__ Between 2 and 10 minutes after the engine starts.
__ At least 10 minutes or longer after starting the engine.
__ It could happen any time after starting the engine.

About how long does the engine have to be off before the problem will happen again?
__ 4 hours or more.
__ More than 30 minutes but less than 4 hours.
__ Less than 30 minutes of being turned off.
__ It does not matter how long the engine was off.

Do weather conditions affect the problem? __ No __ Yes
If yes, which ones? __ Hot __ Cold __ Rain __ Fog __ Snow __ Humid __ Dry
Does outside temperature affect the problem? __ No __ Yes
If yes, what temperature? ____ °F

Please check any of these driving conditions that cause the problem. __ Accelerating __ Decelerating __ Turning Right/Left __ Steady Speed (approximate vehicle speed _____ MPH)

Type of fuel used? __ Regular unleaded __ Premium unleaded __ Gasohol __ Other

Was The Check Engine Light On? __ Yes __ No __ Flashing

Were Other Warning Lights On? __ Yes __ No __ Flashing Which Ones? _____

Additional Comments:
_____
_____
_____
_____
_____

Please use the back of this sheet if needed.

Customer Information Worksheet

Verifying Customer Complaint

COMPLAINT VERIFICATION

Whenever possible, the technician should personally verify the complaint. Having experienced the malfunction, the technician is less likely to repair non-existent faults.

MALFUNCTION VERIFICATION

Today's sophisticated automotive systems are easily misunderstood, which can lead to repairs that attempt to force a particular system to perform in a way that it was never intended to operate. Therefore, the troubleshooting technician should compare the system operation to the nominal system operation.

PREVIOUS REPAIRS

Vehicle repair history can provide explanations to unusual complaints that seem to elude normal troubleshooting attempts. Incorrect

components or unapproved repairs can have subtle influences on seemingly unrelated systems.

Checking the Basics

CHECKING THE BASICS

All troubleshooting must begin by **"Checking the Basics"**. Certain basic faults can be undetectable by the self-diagnostic systems of the fuel and ignition control units and in some cases can actually interfere with the self-checking and fault memory operation.

Fault codes should be retrieved at this time. This will prevent loss of codes in the event of power disruption to the control module, or similar event that could cause loss of codes.

Prior to any teardown, repair or component replacement, the following steps should always be considered:

Battery State of Charge
Batteries in a state of partial discharge can have a dramatic effect on control units and related components.

Positive Battery Cable Integrity
All positive electrical connections must be in perfect condition for trouble-free electronic system operation.

Fuse Integrity
Fuses are employed to prevent possible damage to electrical components and wiring harnesses. The fuses and their connections must be without dynamic resistance. Dynamic resistance can only be checked using the voltage drop method of testing.

Negative Ground Connections
As all electrical circuits are a circle, all negative battery connections must also be checked and verified to be in perfect condition. A poor "common" ground point will cause seemingly unrelated systems to influence one another. High current systems which encounter a poor "common" ground can back feed through other electrical systems causing unusual operation and perhaps premature component failure. As with the positive side of the electrical system, the ground side should be checked dynamically using the voltage drop technique.

Powertrain Cable Attachments
Metal cables attached to the engine or transmission that appear overheated and/or discolored indicate the need to thoroughly test all ground connections.

Power Supply Relays
The system relay as well as its plug connection can be a source of intermittent operation which will not set a fault in control unit fault memory.

Vehicle Sensors
Sensors should be checked statically and dynamically. Physical mounting and condition of the sensor must be assured.

Ignition System
The ignition primary and secondary systems should be inspected for loose connections, damaged insulation, moisture, and corrosion.

Fuel Delivery
Fuel delivery must begin at once when cranking and the pressure in the fuel rails must be within specifications. Fuel pressure retention must be maintained between the fuel pump outlet and the pressure regulator after engine shutdown.

Air/Fuel Ratio
When troubleshooting idle quality or driveability complaints, it is necessary to consider the following:

- Presence of unmetered air leaks
- Evaporative purge system
- Excessive engine oil dilution
- Color and odor of exhaust
- Condition of air and PCV filter
- Condition of air flow meter electrical connections

Diagnostic Notes

The Diagnostic Routines list in test step form the systems that can contribute to a particular condition in the order of probability, ease of accomplishment, and accessibility. These routines can be used as check lists for reference in the event of unusual or infrequent causes of a malfunction.

The order in which the Diagnostic Routines are listed, has been carefully organized to include the most frequent faults at the top of each symptom list and least frequent at the bottom. In some cases a system is listed ahead of another due to the fact that it is much easier to diagnose and, therefore, less time consuming. Unless the fault is evident, it is recommended that all diagnosis begin with a thorough visual inspection of a suspected system or component, followed by a system by system diagnosis as presented in the following routines. After each repair is made, check to see if symptom(s) are still presented. If a particular system is determined to be operating normally, return to the **Diagnostic Routine Index** for other possible causes of the symptom.

SPECIAL NOTES:

The technician is not required to adhere to the order specified in the diagnostic routines due to variations in vehicle type, system accessibility, vehicle repair history or technician experience.

On-line Automotive Service Information System **(OASIS)** numbers have been included where applicable.

The technician should obtain OASIS special service information on the customer's concern prior to performing extensive diagnosis and repairs.

When referenced to another area, look at the Visual Inspection chart provided prior to the test procedure. These charts list obvious fault possibilities that may have been overlooked.

This section also contains a "Customer Information Worksheet."

This worksheet is to be filled in by the customer so that his/her description of the problem can be given to the technician working on the vehicle.

Quick Test Description

DEFINITION

Quick Test is a check of system electronics which uses the control module of each system to perform diagnostics on itself and its circuitry. This module capability is referred to as Diagnostic Test Mode. Since little effort is required to initiate Diagnostic Test Mode, but vital information is quickly retrieved in return, the procedure is called Quick Test.

CAUTION:

- Quick Test is a fast and powerful diagnostic aid, but it cannot detect all possible failures that can occur in EEC systems. The Quick Test procedure has been carefully constructed to guide and refer you to Pinpoint Tests that inspect components and circuitry associated with particular symptoms.

- Remember, everything that went wrong with cars before electronics can still go wrong, and still cause the majority of driveability problems. The best diagnosis starts with a list of symptoms and possible causes, followed by a careful checking of those causes in the most probable order.

DIRECTIONS

When directed to Quick Test, perform all of Quick Test step by step, following directions in the "Action To Take" column. If all phases of Quick Test give no indication of a problem, it is likely the problem is non-electronic and will be found elsewhere. When directed to a Pinpoint Test, always read the notes and carefully examine the test schematic. When a repair has been made, erase codes and rerun Quick Test to confirm the repair was effective.

Initial Inspection

Perform thorough underhood inspection. Problems can frequently be resolved at this stage without further testing. Visually inspect the following:

- Vacuum hoses for proper routing, tight connections, splits, kinks, obvious tampering.

- Vacuum fittings for improperly capped or plugged ports. Be sure to check hidden areas around the throttle body and other components..

  NOTE: Some manufacturers use an orifice-insert within a vacuum line as a delay device. Do not mistake such a device for tampering and remove it.

- Electronic Engine Control system wiring harness for proper connections, bent or broken pins, corrosion, loose wires, and proper routing.

- Ignition wires for proper routing, cracking, hardness, and tight connections at distributor, coil, and spark plugs.

- Electrical wiring and harness connections for tight fit, abrasions, breaks, etc. Ground connections must be clean and tight.

- Verify that components are properly installed and have not been modified or damaged. Ensure that any replaced components are correct for the application.

- Check for air or vacuum leaks around intake and exhaust manifolds, throttle body, air flow meter, and air induction hoses.

- Catalytic converter(s), muffler, exhaust pipes, brackets, and hangers for modification or damage.

- Engine coolant for proper level and mixture.

- Transmission fluid level and quality.

- Engine oil for proper level and quality.

Adaptive Strategy

Drive the the vehicle for at least ten miles to allow the PCM to relearn the values for optimum performance.

NOTE: During the ten mile relearn drive, the vehicle may exhibit some driveability symptoms. These should be eliminated when the KAM has relearned the operating values.

Address Continuous Memory DTC

If any continuous memory codes were received during the Key On Engine Off (KOEO) self test, refer to the DTC code charts for proper diagnostic path. See: Diagnostic Trouble Code Tests and Associated Procedures/With EEC IV (OBD I-A System)

If no codes were received, return to the diagnosis by symptom charts. See: Symptom Related Diagnostic Procedures

Base Ignition Timing Check

1. Turn the ignition key OFF.
2. Place the transmission in PARK (A/T) or NEUTRAL (M/T).
3. Turn OFF all electrical loads (A/C, heater, radio, lights, etc.).
4. Disconnect the SPOUT connector.
5. START the engine using the ignition switch. DO NOT use a remote starter for this step.
   NOTE: If engine starts then stalls go to pinpoint test S2. If the engine will not start, proceed to **IGNITION SYSTEMS**.
6. Using an inductive timing light, check ignition timing.
   NOTE: For a 2.3 Dual Plug engine use the exhaust side plug. If timing does not work, go to Key On Engine Running (KOER) self test. See: Reading and Clearing Diagnostic Trouble Codes/With EEC IV (OBD I-A System)/Reading Diagnostic Trouble Codes/Quick Test Appendix (Detailed Testing Instructions)/Key ON Engine Running (KOER) Self-Test
   a. If the timing is within ±2 degrees of specifications, continue with Computed Timing Check. See: Reading and Clearing Diagnostic Trouble Codes/With EEC IV (OBD I-A System)/Reading Diagnostic Trouble Codes/Quick Test Appendix (Detailed Testing Instructions)/Computed Timing Check
   b. If the timing is not within ±2 degrees of specifications, adjust ignition timing (Distributor Ignition (DI) systems) or refer to **IGNITION SYSTEMS** for possible causes of improper timing (Electronic Ignition (EI) systems).

With Scan Tool

NOTE: Using this procedure, the technician can attempt to recreate and detect an intermittent fault.

KEY ON ENGINE OFF

1. Ensure the ignition switch is in the OFF position and connect a scan tool to the diagnostic connector.
2. Turn the ignition key to the ON position.
3. ACTIVATE, DEACTIVATE, and REACTIVATE the self-test (refer to scan tool manual for instructions). You are now in the wiggle test mode.

   NOTE: Some scan tools have a "wiggle mode" test option on the scan tool menu. Enter the test through the menu instead of the manner described above.

4. Tap, move, and wiggle the suspected circuits sensors and wiring. When a fault is detected, the Powertrain Control Module **(PCM)** will set a code and the scan tool will signal a fault (refer to scan tool manual for signal).

   NOTE: If any codes are set, refer to the Diagnostic Trouble Code Charts for the appropriate pinpoint test. See: Diagnostic Trouble Code Tests and Associated Procedures/With EEC IV (OBD I-A System)

5. To exit the wiggle test mode, DEACTIVATE the self test and turn the key OFF.

KEY ON ENGINE RUNNING

NOTE: The Key On Engine Running **(KOER)** wiggle test may be entered any time the engine is running.

1. Ensure the ignition switch is in the OFF position and connect a scan tool to the diagnostic connector.
2. START the engine, then ACTIVATE, DEACTIVATE, and REACTIVATE the self test. You are now in the engine running wiggle test mode.

   NOTE: Some scan tools have a "wiggle mode" test option on the scan tool menu. Enter the test through the menu instead of the manner described above.

   NOTE: Do not turn the engine OFF.

3. Tap, move, and wiggle the suspected circuits sensors and wiring. When a fault is detected, PCM will set a code and the scan tool will signal a fault (refer to scan tool manual for signal).
   NOTE: If any codes are set, refer to the Diagnostic Trouble Code Charts for the appropriate pinpoint test. See: Diagnostic Trouble Code Tests and Associated Procedures/With EEC IV (OBD I-A System)
4. To exit the wiggle test mode, DEACTIVATE the self test and turn the key OFF.

Without Scan Tool

NOTE: Using this procedure, the technician can attempt to recreate and detect an intermittent fault.

KEY ON ENGINE OFF

1. Ensure the ignition switch is in the OFF position.
2. Turn the ignition key to the ON position.

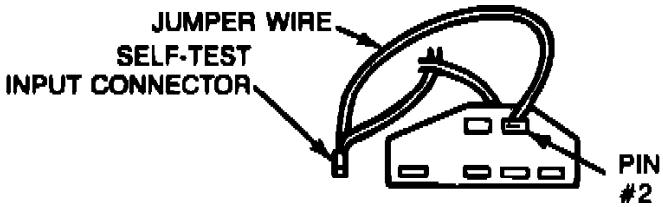

Jumper Wire Installed Between Pin #2 And Self Test Input (STI)

3. ACTIVATE, DEACTIVATE, and REACTIVATE the self-test by grounding, ungrounding, and re-grounding the STI connector. You are now in the wiggle test mode.
4. Tap, move, and wiggle the suspected circuits sensors and wiring. When a fault is detected, the Powertrain Control Module **(PCM)** will set a code and signal a fault by flashing the CHECK ENGINE light.

   NOTE: If any codes are set, refer to Diagnostic Trouble Code Charts for the appropriate pinpoint test. See: Diagnostic Trouble Code Tests and Associated Procedures/With EEC IV (OBD I-A System)

5. To exit the wiggle test mode, DEACTIVATE the self test and turn the key OFF.

KEY ON ENGINE RUNNING

NOTE: The Key On Engine Running **(KOER)** wiggle test may be entered any time the engine is running.

1. Ensure the ignition switch is in the OFF position.
2. START the engine, then ACTIVATE, DEACTIVATE, and REACTIVATE the self test. You are now in the engine running wiggle test mode.

   NOTE: Do not turn the engine OFF.

3. Tap, move, and wiggle the suspected circuits sensors and wiring. When a fault is detected, PCM will set a code and signal a fault.

   NOTE: If any codes are set, refer to Diagnostic Trouble Code Charts for the appropriate pinpoint test. See: Diagnostic Trouble Code Tests and Associated Procedures/With EEC IV (OBD I-A System)

4. To exit the wiggle test mode, DEACTIVATE the self test and turn the key OFF.

Cylinder Balance Test

The purpose of the cylinder balance test is to aid the technician in finding a weak cylinder. The test is entered by depressing and releasing the throttle within two minutes after the engine RUNNING self test codes have been outputted.
Once the test is entered, the idle speed control duty is fixed and the engine is allowed to stabilize. The engine speed is measured and stored for comparison with the other readings received later in the testing. Then the fuel is shut OFF to the last cylinder in the engine. After the engine speed stabilizes, the rpm is measured and stored. The injector is turned ON and the process is repeated for each cylinder. At this point, the maximum rpm drop is selected from the table of drops for each cylinder. This maximum drop is now multiplied by a calibrated precentage. The resulting number (rpm) is now used as the minimum rpm that each cylinder must have dropped to pass the test. (Example: 150 rpm x 65% = 98 rpm).
If all cylinders drop at least this amount, then a code 90 is output indicating a pass. No further testing is necessary. If a cylinder did not drop at least this amount, then the cylinder number will be output. (Example: 30 is output for cylinder #3). This indicates that cylinder 3 is weak or non-contributing.
The test can now be repeated a second time if the throttle is depressed and released within two minutes of the last code output. This time the maximum rpm drop that occurs is multiplied by a lower percentage. This number is now used as the minimum rpm drop for each cylinder. (Example: 150 rpm x 43% = 65 rpm).
If all of the rpm drops are greater than 65 rpm, then a code 90 is output. If cylinder number 3 had failed the first level and passed the second, then cylinder 3 is considered to be weak. If cylinder 3 fails again, the code 30 will be output again.
This test can be repeated a third time by depressing and releasing the throttle within two minutes of the last code output. This time the maximum rpm drop that results is multiplied by a still lower percentage. This number is now used as the minimum rpm drop for each cylinder to pass this test. (Example: 150 rpm x 20% = 30 rpm).
If all of the rpm drops are greater than 30 rpm, then a code 90 is output. If cylinder number 3 had failed the previous two levels, but passed the third, then it is considered to be a very weak cylinder. If cylinder 3 again fails the test, then a code 30 is again output. In this case, cylinder 3 is considered a non-contributing cylinder.
The cylinder balance test may be repeated as many times as desired by depressing and releasing the throttle within two minutes of the last code output. All further testing will be done using the third percentage level.

Output State Diagnostic Test Mode

1. Enter the self test procedure.
2. After the codes are outputted, briefly depress the throttle to the wide open throttle. The Powertrain Control Module (PCM) ENERGIZES the actuators.
3. Briefly depress the throttle to the wide open throttle. The Powertrain Control Module (PCM) DE-ENERGIZES the actuators.

With Scan Tool

NOTE: Correct results of the quick tests are dependent on the proper operation of related non-EEC-IV components.

It may be necessary to disconnect or disassemble harness connector assemblies to do some of the inspections. Pin locations should be noted prior to disassembly.

1. Turn OFF the ignition, place the transmission in PARK (A/T) or NEUTRAL (M/T), and place blocks around a wheel.
2. Inspect the air cleaner and inlet ducting.
3. Check all engine vacuum hoses for damage, leaks, cracks, blockage, proper routing, etc.
4. Check EEC-IV system wiring harness for proper connections, bent or broken pins, corrosion, loose wires, proper routing, etc.
5. Check the Powertrain Control Module **(PCM)**, sensors, and actuators for physical damage.
6. Check the engine coolant for proper level.
7. Check the transmission fluid level and quality.
8. Make all necessary repairs prior to continuing with test preparation.
9. Turn off all electrical loads (radios, lights, A/C-heater blower fans, etc.).
10. Turn the ignition switch OFF.
11. Connect the scan tool to the diagnostic connector.
12. Connect a timing light to the engine.
13. Continue with Key On Engine Off Self Test. See: Reading and Clearing Diagnostic Trouble Codes/With EEC IV (OBD I-A System)/Reading Diagnostic Trouble Codes/Quick Test Appendix (Detailed Testing Instructions)/Key On Engine Off (KOEO) Self Test

With Malfunction Indicator Light or Analog Voltmeter

NOTE: Correct results of the quick tests are dependent on the proper operation of related non-EEC-IV components.
It may be necessary to disconnect or disassemble harness connector assemblies to do some of the inspections. Pin locations should be noted prior to disassembly.

1. Turn OFF the ignition, place the transmission in PARK (A/T) or NEUTRAL (M/T), and place blocks around a wheel.
2. Inspect the air cleaner and inlet ducting.
3. Check all engine vacuum hoses for damage, leaks, cracks, blockage, proper routing, etc.
4. Check EEC-IV system wiring harness for proper connections, bent or broken pins, corrosion, loose wires, proper routing, etc.
5. Check the Powertrain Control Module **(PCM)**, sensors, and actuators for physical damage.
6. Check the engine coolant for proper level.
7. Check the transmission fluid level and quality.
8. Make all necessary repairs prior to continuing with test preparation.
9. Turn off all electrical loads (radios, lights, A/C-heater blower fans, etc.).
10. Turn the ignition switch OFF.
11. Connect a timing light to the engine.
12. Continue with Key On Engine Off Self Test. See: Reading and Clearing Diagnostic Trouble Codes/With EEC IV (OBD I-A System)/Reading Diagnostic Trouble Codes/Quick Test Appendix (Detailed Testing Instructions)/Key On Engine Off (KOEO) Self Test

With Scan Tool

NOTE: Correct results of the quick tests are dependent on the proper operation of related non-EEC-IV components.

It may be necessary to disconnect or disassemble harness connector assemblies to do some of the inspections. Pin locations should be noted prior to disassembly.

1. Turn OFF the ignition, place the transmission in PARK (A/T) or NEUTRAL (M/T), and place blocks around a wheel.
2. Inspect the air cleaner and inlet ducting.
3. Check all engine vacuum hoses for damage, leaks, cracks, blockage, proper routing, etc.
4. Check EEC-IV system wiring harness for proper connections, bent or broken pins, corrosion, loose wires, proper routing, etc.
5. Check the Powertrain Control Module **(PCM)**, sensors, and actuators for physical damage.
6. Check the engine coolant for proper level.
7. Check the transmission fluid level and quality.
8. Make all necessary repairs prior to continuing with test preparation.
9. Turn off all electrical loads (radios, lights, A/C-heater blower fans, etc.).
10. Turn the ignition switch OFF.
11. Connect the scan tool to the diagnostic connector.
12. Connect a timing light to the engine.
13. Continue with Diagnosis By Symptom KOEO Self Test. See: Reading and Clearing Diagnostic Trouble Codes/With EEC IV (OBD I-A System)/Reading Diagnostic Trouble Codes/Quick Test Appendix (Detailed Testing Instructions)/Key On Engine Off (KOEO) Self Test

With Check Engine Light

NOTE: Correct results of the quick tests are dependent on the proper operation of related non-EEC-IV components.

It may be necessary to disconnect or disassemble harness connector assemblies to do some of the inspections. Pin locations should be noted prior to disassembly.

1. Turn OFF the ignition, place the transmission in PARK (A/T) or NEUTRAL (M/T), and place blocks around a wheel.
2. Inspect the air cleaner and inlet ducting.
3. Check all engine vacuum hoses for damage, leaks, cracks, blockage, proper routing, etc.
4. Check EEC-IV system wiring harness for proper connections, bent or broken pins, corrosion, loose wires, proper routing, etc.
5. Check the Powertrain Control Module **(PCM)**, sensors, and actuators for physical damage.
6. Check the engine coolant for proper level.

7. Check the transmission fluid level and quality.
8. Make all necessary repairs prior to continuing with test preparation.
9. Turn off all electrical loads (radios, lights, A/C-heater blower fans, etc.).
10. Turn the ignition switch OFF.
11. Connect a timing light to the engine.
12. Continue with Diagnosis By Symptom KOEO Self Test. See: Reading and Clearing Diagnostic Trouble Codes/With EEC IV (OBD I-A System)/Reading Diagnostic Trouble Codes/Quick Test Appendix (Detailed Testing Instructions)/Key On Engine Off (KOEO) Self Test

With Scan Tool

NOTE: It may be necessary to service non-EEC-IV faults before running the quick test.

Continuous codes recorded in this step will be used for diagnosis in **ADDRESS CONTINUOUS MEMORY DTC** after a pass code is received in both Key On Engine Off **(KOEO)** and Key On Engine Running **(KOER)** self-tests.

Deviation from this procedure may cause false codes to be output.

1. START engine and bring to normal operating temperature.
   NOTE: If engine will not start or stalls after starting, proceed with the Key On Engine Off (KOEO) self test.
2. Turn the key OFF, then wait ten seconds.
3. ACTIVATE the self test (refer to scan tool manual for instructions).
4. Turn the ignition key to the ON position.
5. Record all codes received.
6. Turn the ignition key OFF and DEACTIVATE the self test.
7. If a pass code (11 or 111) is received for hard codes (11/111-10-any code), proceed with Base Timing Check. See: Ignition System/Ignition Timing
   If any hard codes are received, refer to the appropriate diagnostic trouble code chart for diagnostic path. See: Diagnostic Trouble Code Tests and Associated Procedures/With EEC IV (OBD I-A System)

With Malfunction Indicator Light (MIL)

NOTE: It may be necessary to service non-EEC-IV faults before running the quick test.
Continuous codes recorded in this step will be used for diagnosis in **ADDRESS CONTINUOUS MEMORY DTC** after a pass code is received in both Key On Engine Off **(KOEO)** and Key On Engine Running **(KOER)** self-tests.
Deviation from this procedure may cause false codes to be output.

1. START engine and bring to normal operating temperature.
   NOTE: If engine will not start or stalls after starting, proceed with the Key On Engine Off (KOEO) self test.
2. Turn the key OFF, then wait ten seconds.

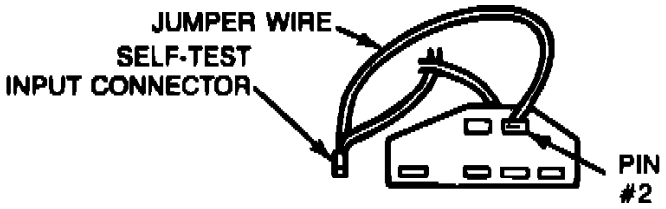

Jumper Wire Installed Between Pin #2 And Self Test Input (STI)

3. ACTIVATE the self test by grounding the STI connector.
4. Turn the ignition key to the ON position.
5. Record all codes received.
6. Turn the ignition key OFF and DEACTIVATE the self test.
7. If a pass code (11 or 111) is received for hard codes (11/111-10-any code), proceed with the next Base Timing Check. See: Reading and Clearing Diagnostic Trouble Codes/With EEC IV (OBD I-A System)/Reading Diagnostic Trouble Codes/Base Ignition Timing Check
   If any hard codes are received, refer to the appropriate diagnostic trouble code chart for diagnostic path. See: Diagnostic Trouble Code Tests and Associated Procedures/With EEC IV (OBD I-A System)

With Scan Tool

1. Ensure self test is DEACTIVATED, then START and run the engine at 2,000 rpm for two minutes.
   NOTE: IF the engine starts but stalls, or stalls during self test, refer to pinpoint test step S2. See: Pinpoint Tests/With EEC IV (OBD I-A System)/S - System Check/S2 - Check For RPM Drop

2. Turn the engine OFF and wait for ten seconds.
3. ACTIVATE the self test (refer to scan tool manual).
4. START the engine.
5. After the engine ID code, depress and release the brake pedal, then turn the steering wheel 1/2 turn and release it. If the vehicle is equipped with an E4OD transmission cycle the Overdrive Cancel Switch **(OCS)**.
6. When the dynamic response "goose" code appears, briefly go to wide open throttle.
7. Record all codes displayed.
   NOTE: Engine running service code 98/998 indicates vehicle is in Failure Mode Effects Management **(FMEM)** and DID NOT PASS the Key ON Engine OFF **(KOEO)** on demand/continuous memory self test. Engine running self test cannot be performed while in FMEM. Rerun KOEO self test and correct all fault codes. See: Reading and Clearing Diagnostic Trouble Codes/With EEC IV (OBD I-A

System)/Reading Diagnostic Trouble Codes/Quick Test Appendix (Detailed Testing Instructions)/Key On Engine Off (KOEO) Self Test

8. Turn OFF the engine and DEACTIVATE the self test.
9. If a pass code (11/111) was received in the KOER test, proceed with the Addressing Continuous Memory DTC. See: Reading and Clearing Diagnostic Trouble Codes/With EEC IV (OBD I-A System)/Reading Diagnostic Trouble Codes/Address Continuous Memory DTC
   If any other codes are received, refer to the proper diagnostic trouble code chart for the diagnostic path. See: Diagnostic Trouble Code Tests and Associated Procedures/With EEC IV (OBD I-A System)

With Check Engine Light

1. Ensure self test is DEACTIVATED, then START and run the engine at 2,000 rpm for two minutes.
   NOTE: IF the engine starts but stalls, or stalls during self test, refer to pinpoint test step S2. See: Pinpoint Tests/With EEC IV (OBD I-A System)/S - System Check/S2 - Check For RPM Drop
2. Turn the engine OFF and wait for ten seconds.
3. ACTIVATE the self test by grounding the STI connector.

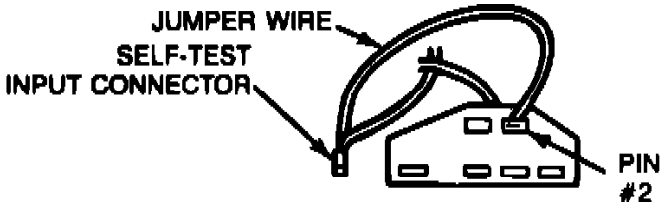

Jumper Wire Installed Between Pin #2 And Self Test Input (STI)

4. Start the engine.
5. After the engine ID code, depress and release the brake pedal, then turn the steering wheel 1/2 turn and release it. If the vehicle is equipped with an E4OD transmission cycle the Overdrive Cancel Switch **(OCS)**.
6. When the dynamic response "goose" code appears, briefly go to wide open throttle.
7. Record all codes displayed.
   NOTE: Engine running service code 98/998 indicates vehicle is in Failure Mode Effects Management **(FMEM)** and DID NOT PASS the Key ON Engine OFF **(KOEO)** on demand/continuous memory self test. Engine running self test cannot be performed while in FMEM. Rerun KOEO self test and correct all fault codes. See: Reading and Clearing Diagnostic Trouble Codes/With EEC IV (OBD I-A System)/Reading Diagnostic Trouble Codes/Quick Test Appendix (Detailed Testing Instructions)/Key On Engine Off (KOEO) Self Test
8. Turn OFF the engine and DEACTIVATE the self test.
9. If a pass code (11) was received in the KOER test, proceed with the Address Continuous Memory DTC. See: Reading and Clearing Diagnostic Trouble Codes/With EEC IV (OBD I-A System)/Reading Diagnostic Trouble Codes/Address Continuous Memory DTC
   If any other codes are received, refer to the proper diagnostic trouble code chart for the diagnostic path. See: Diagnostic Trouble Code Tests and Associated Procedures/With EEC IV (OBD I-A System)

Computed Timing Check

1. Disconnect the SPOUT connector.
2. Start the engine and allow to idle.
3. While observing ignition timing with a timing light, install the SPOUT connector.
   a. If the ignition timing changed when the SPOUT connector was installed continue with engine running self test.
   b. If the ignition timing did not change when the SPOUT connector was installed continue with engine running test and look for code 213/18.
      If the code is present, ignore any other codes and refer to the appropriate code chart for code 213/18.
      If the code is not present, continue with the engine running test as directed in the test.

Service Code Output Format

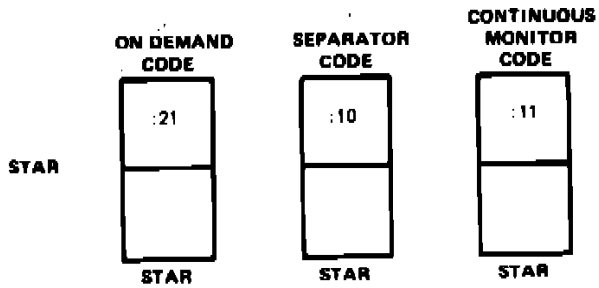

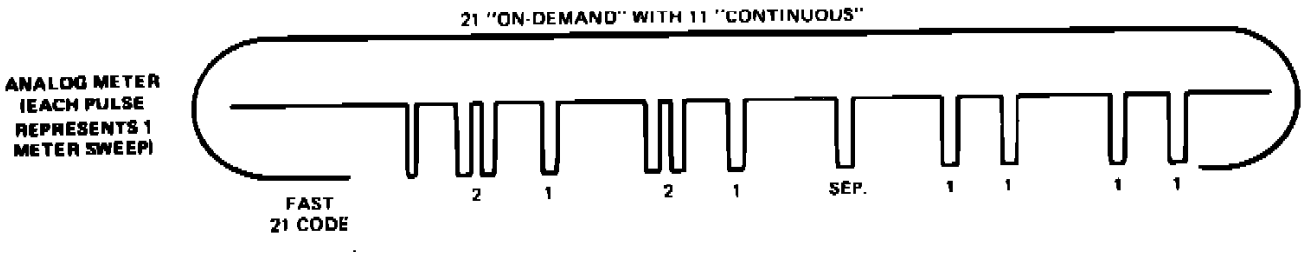

Self-Test Code Output Format. Key ON/Engine OFF

The Electronic Engine Control (EEC-IV) system communicates service through the self test codes. These codes are two or three digit numbers representing the results of the self test.
The Diagnostic Trouble Codes (DTCs) are transmitted on the Self Test Output (STO) wire located on the vehicle self test connector. The codes are in the form of timed pulses, and are read by the technician on a scan tool or the CHECK ENGINE light.
NOTE: Two digit codes are shown in the images. Three digit codes are similar.

Fast Codes Description

Fast codes are given prior to regular Diagnostic Trouble Codes (DTCs). These codes contain the identical information as the regular DTCs but are transmitted at 100 times the normal rate. These codes are used at the factory and should be ignored in the field.

Continuous Memory Diagnostic Test Codes Description

The continuous codes are issued as a result of information stored (memory codes) during continuous monitor testing, while the vehicle was in normal operation. These codes must be retrieved within 80 (40 on some models) warm-up cycles. On the 81st (41st on some models) warm-up cycle these codes will be erased. These codes can be manually erased during the Key On Engine Off (KOEO) self test. These codes are displayed only during the Key On Engine Off (KOEO) testing after the separator code.

Dynamic Response (Goose) Code Description

The dynamic response (goose) code is displayed during the Key On Engine Running (KOER) test only. It is displayed as single pulse (10 on a scanner) and is displayed after the engine ID code. When the "goose" code is displayed, the operator should briefly go to wide open throttle. This input is used to test the operation of the Throttle Position (TP) sensor, Mass Air Flow (MAF) sensor, Manifold Absolute Pressure (MAP) sensor, and Knock Sensor (KS) (where applicable).

Engine ID Code Description

Engine identification codes are issued at the beginning of the Key On Engine Running test. The engine identification code is equal to the number of engine cylinders when the number is multiplied by two and the zero dropped. These codes are used to verify that the proper processor is installed and that the self-test has been entered.

Hard Codes (On Demand) Description

The hard (on-demand) codes are displayed in both the Key On Engine Off (KOEO) and Key On Engine Running (KOER) self tests. If a hard code is displayed it means that there is a fault present in the system at the time the test was run. In the KOEO self test, the hard codes are displayed first. The hard codes are the codes up to, but not including the separator code (10). In the KOER self test the hard codes are the last codes displayed and will follow the "goose" code.

Separator Pulse Description

A single 1/2 second separator pulse is issued 6-9 seconds after the last functional test code (Key ON/Engine OFF only). Then 6-9 seconds after the single 1/2 second separator pulse, the continuous codes will be issued.

With Scan Tool

NOTE: DO NOT disconnect the battery to clear continuous memory codes. This will erase the Keep Alive Memory (KAM) information and may cause driveability symptoms.

Perform the Key On Engine Off (KOEO) self test. When the codes begin to be displayed, DEACTIVATE the self test by disconnecting the ground wire from the
STI connector. The continuous memory codes are now erased from the computers memory.

Without Scan Tool

NOTE: DO NOT disconnect the battery to clear continuous memory codes. This will erase the Keep Alive Memory (KAM) information and may cause driveability symptoms.

Perform the Key On Engine Off (KOEO) self test. When the codes begin to be displayed, DEACTIVATE the self test by disconnecting the ground wire from the STI connector. The continuous memory codes are now erased from the computer's memory.

Clearing Keep Alive Memory (KAM) and Relearn Procedure

The Powertrain Control Module **(PCM)** stores information about vehicle operating conditions and uses this information to compensate for component tolerances. When an emission related component is replaced, Keep Alive Memory **(KAM)** should be cleared to erase the information stored by the processor from the original component.

To clear the KAM, disconnect the battery negative terminal for five minutes or more. Drive the the vehicle for at least ten miles to allow the PCM to relearn the values for optimum performance.

NOTE: During the ten mile relearn drive, the vehicle may exhibit some driveability symptoms. These should be eliminated when the KAM has relearned the operating values.

TEST STEP		RESULT ▶	ACTION TO TAKE
QT1	PERFORM VISUAL INSPECTION		
	• Inspect the air cleaner and inlet ducting, tubes, and clamps. • Check all engine vacuum hoses for damage, leaks, cracks, blockage, improper routing, etc. • Check the PCM wiring harness for improper connections, bent or broken pins, corrosion, loose wires, improper routing, blown fuses, etc. • Check the processor, sensors and actuators for physical damage. • Check the engine coolant for proper level. • Check the engine oil level and quality. • Check the battery voltage. • **Do all components and fluids appear OK?**	Yes ▶ No ▶	GO to QT2, Vehicle Preparation. SERVICE the fault(s) in the system as required and REEVALUATE the symptom(s).

EEC Quick Test QT1

QT2	PERFORM VEHICLE PREPARATION		
	• Perform all the following safety steps required to start and run vehicle tests: — Apply the parking brake. — Place the selector lever firmly into the PARK position (NEUTRAL on manual transaxle). — Block the drive wheels. • Turn off all electrical loads: — Radios — Lights — A/C — Rear window defroster — Heater, blower fans, etc. • **Have all the safety steps been performed and all electrical loads been turned off?**	Yes ▶ No ▶	GO to QT3, Equipment Hookup. Personal safety and correct diagnostic results are dependent on test step QT2. MAKE all the necessary repairs to perform vehicle preparation.

EEC Quick Test QT2

TEST STEP	RESULT ▶	ACTION TO TAKE
QT3 PERFORM EQUIPMENT HOOKUP		
• **If using New Generation Star (NGS) Scan Tool** — Key OFF. — Connect the DLC Adapter to the Diagnostic Data Link (DDL) connector on the NGS Scan Tool. — Connect Rotunda Super MECS Adapter 007-00052 to the DLC Adapter. — Connect the adapter cable leads to the STO and STI connectors on 1.3L and 1.6L engines or to the Data Link Connector (DLC) on the 1.8L, 2.0L 4EAT and 2.5L engines. — Connect the adapter cable ground clip to the negative (-) battery terminal for the 1.3L and 1.6L engines. — Slide the adapter switch on the Super MECS Adapter to the PCM position for the 1.8L, 2.0L 4EAT and 2.5L engines. — Connect the NGS Power Cable to the battery with the battery adapter. • **If using SUPER STAR II Tester** — Key OFF. — Connect Rotunda Super MECS Adapter 007-00052 to the SUPER STAR II Tester. The previously issued Rotunda Adapter 007-00036 may still be used on the 1.3L and 1.6L engines while Rotunda Adapter 007-00049 may be used on the 1.8L, 2.0L 4EAT and 2.5L engines. — Connect the adapter cable leads to the STO and STI connectors on 1.3L and 1.6L engines or to the Data Link Connector (DLC) on the 1.8L, 2.0L 4EAT and 2.5L engines. — Connect the adapter cable ground clip to the negative (-) battery terminal for the 1.3L and 1.6L engines. — Slide the adapter switch on the Super MECS adapter to the PCM position for the 1.8L, 2.0L 4EAT and 2.5L engines. — Slide the SUPER STAR II Tester switch to the MECS position. • **Is equipment hooked up properly?**	Yes ▶ No ▶	GO to QT4, Key ON, Engine Off Test. SERVICE the fault(s) as necessary and REPEAT QT3.

EEC Quick Test QT3 (Part 1)

TEST STEP	RESULT ▶	ACTION TO TAKE
QT3 PERFORM EQUIPMENT HOOKUP (CONTINUED)		
• **If using Analog VOM** — Key OFF. — Connect the VOM positive (+) lead to the PCM STO line and the negative (-) lead to engine ground. — Jumper the PCM STI to engine ground. — Set the VOM on a DC voltage range to read from 0 to 20 volts. • **If using Malfunction Indicator Lamp (MIL)** NOTE: If the MIL flashes continuously prior to equipment hookup, go Pinpoint Test STI. — To use the MIL, jumper the PCM STI line to engine ground. • **Is equipment hooked up properly?**	Yes ▶ No ▶	GO to QT4, Key ON, Engine Off Test. SERVICE the fault(s) as necessary and REPEAT QT3.

EEC Quick Test QT3 (Part 2)

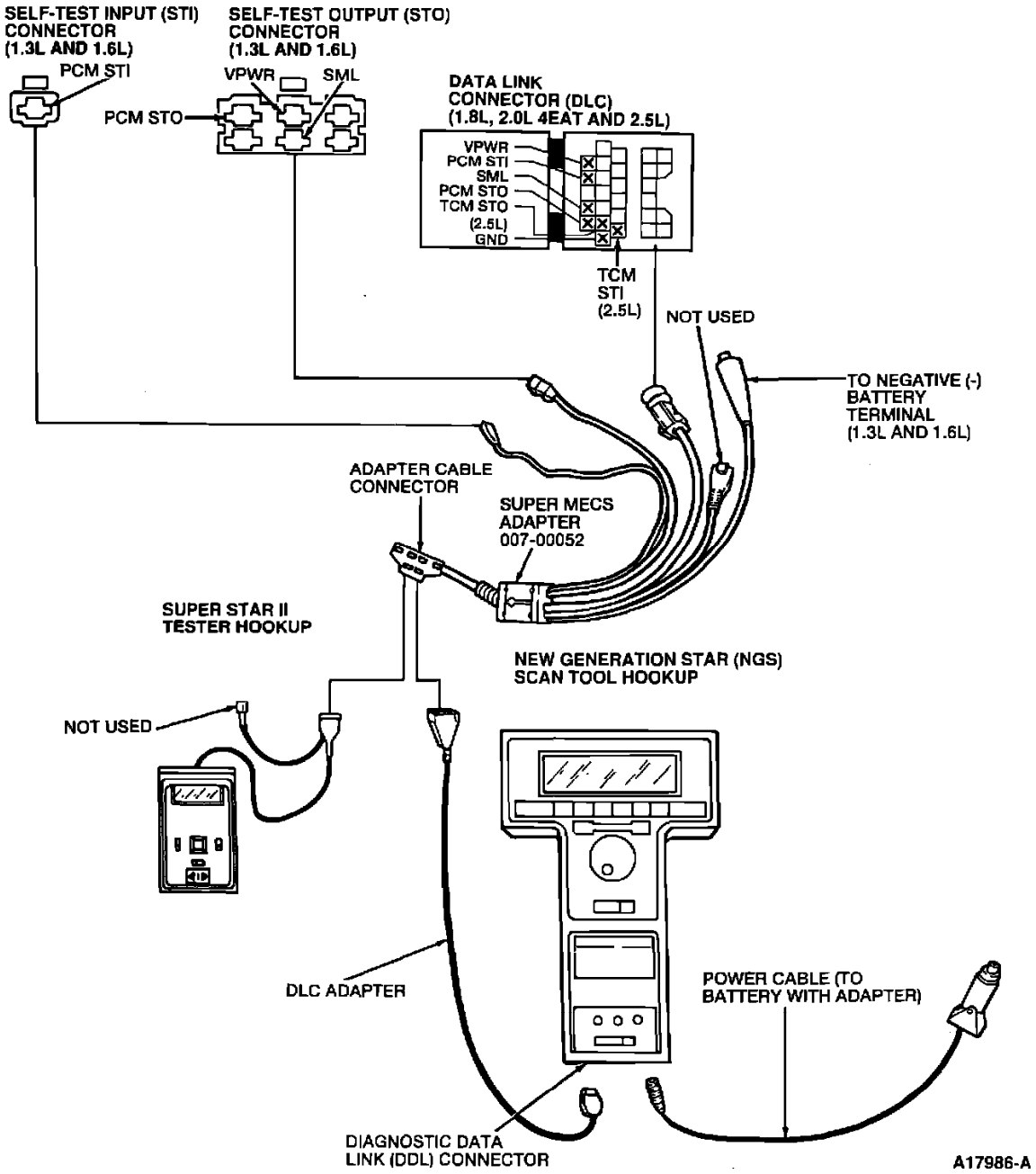

EEC Quick Test Equipment

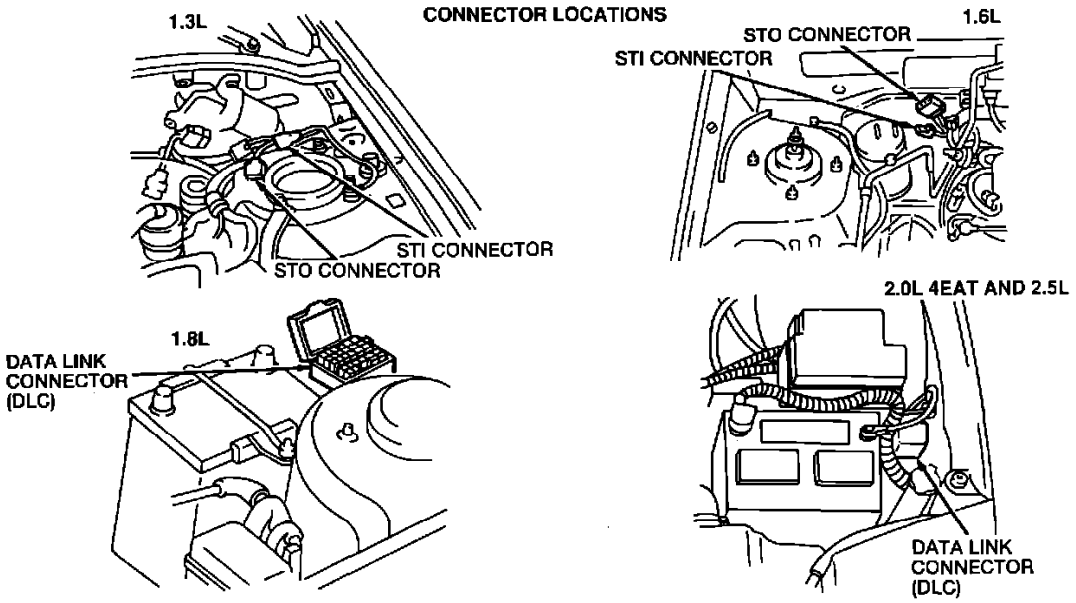

CONNECTOR INFORMATION CHART

Engine	Connector	Connector Location	Pin	Wire Color
1.3L	STO	LH Rear Corner of Engine Compartment	PCM STO	Y/W
			SML	BL/GN
	STI		PCM STI	Y/GN
1.6L	STO	RH Rear Corner of Engine Compartment	PCM STO	GN/BK
			SML	BK/BL
	STI		PCM STI	Y
1.8L	DLC	LH Rear Corner of Engine Compartment Near Battery	PCM STO	W/BK
			SML	W/Y
			PCM STI	LG/Y
2.0L 4EAT	DLC	LH Front Corner of Engine Compartment Near Battery	PCM STO	LG/R
			SML	W/R
			PCM STI	R/W
2.5L	DLC	LH Front Corner of Engine Compartment Near Battery	PCM STO	LG/R
			SML	W/R
			PCM STI	R/W

Connector Information Chart

TEST STEP	RESULT ▶	ACTION TO TAKE
QT4 PERFORM KEY ON ENGINE OFF TEST		
• Follow one of the test procedures based on the type of equipment used: NOTE: When performing the Diagnostic Test Mode on the 1.8L 4EAT or 2.0L 4EAT, either engine or transaxle codes can be received. Refer to the 4EAT Quick Test in Transmission Control Systems. • **If using New Generation Star (NGS) Scan Tool** — Follow the procedure to activate and deactivate the Diagnostic Test Mode. • **If using SUPER STAR II Tester** — Latch the center button to the TEST position. — Turn the SUPER STAR II Tester ON. (The tester will sound and "888" will be displayed for two seconds). — Key ON. — Unlatch and relatch the center test button. — After all codes are received, unlatch the center button to review all codes retained in tester memory. — **Record the diagnostic trouble codes.** • **If using Analog VOM** — Key ON. — Turn the VOM ON. — Observe the VOM needle for any code indications. — **Record the diagnostic trouble codes.** • **If using Malfunction Indicator Lamp (MIL)** — Key ON. — Observe the MIL. — **Record the diagnostic trouble codes.**	Code(s) ▶ STAR Tester always displays STO LO, or VOM always displays 0 volts ▶ No codes and engine starts ▶ No codes and no start ▶	GO to QT5. GO to EEC Pinpoint Test STI. GO to QT6, Key ON Engine Running Test. GO to QT10.

EEC Quick Test QT4

TEST STEP	RESULT ▶	ACTION TO TAKE
QT5 ERASE AND RETEST		
NOTE: Erasing diagnostic trouble codes and retesting will give an indication whether diagnostic trouble codes received in test step QT4 represent hard or intermittent faults. Hard faults will repeat immediately and codes will be displayed during retest. • Confirm code(s) were received in test step QT4. • Turn the SUPER STAR II Tester or VOM OFF, or disconnect the NGS Scan Tool. • Disconnect the negative battery cable and depress the brake pedal for 5-10 seconds to erase codes in memory. • Perform the Key ON Engine Off Test as instructed in test step QT4. NOTE: If codes retrieved the first time cannot be re-created, it may be necessary to tap suspect sensors, shake and wiggle harness, or drive the vehicle in order to induce a failure. Repeat step QT4 each time. • **Record the diagnostic trouble codes.**	Code(s) ▶ No Code(s) ▶ No codes and no start ▶	GO to QT7 and REFER to Diagnostic Charts (Pin Point Tests) for Pinpoint Test direction. GO to QT6, Key ON Engine Running Test. GO to QT10.

EEC Quick Test QT5

QT6	PERFORM KEY ON ENGINE RUNNING TEST		
	NOTE: If using the New Generation Star (NGS) Scan Tool, follow the procedure to activate and deactivate the Diagnostic Test Mode. • Deactivate the Diagnostic Test Mode by unlatching the center button on the SUPER STAR II Tester and turning the tester OFF or disconnect the jumper connecting PCM STI to ground. • Run the engine at 2000 rpm for three minutes. • If using Super Star II Tester, turn the SUPER STAR II Tester ON. • Latch the center button on the SUPER STAR II Tester or jumper the PCM STI to ground if using VOM or MIL. • Turn the engine off. • Start the engine and run the engine at idle. • Activate the Diagnostic Test Mode by unlatching and relatching the SUPER STAR II Tester. • **Record the diagnostic trouble codes.**	Code(s) ▶ No Codes and sent here by QT4 ▶ No Codes and sent here by QT5 ▶	GO to QT7 and REFER to the Diagnostic Charts (Pin Point Tests) for Pinpoint Test direction. GO to QT8, Switch Monitor Test. GO to Intermittent Fault Diagnosis.

EEC Quick Test QT6

TEST STEP		RESULT ▶	ACTION TO TAKE
QT7	DIAGNOSTIC TROUBLE CODE CHART		

Diagnostic Trouble Code	Component	Pinpoint Test Step Direction				
		1.3L	1.6L	1.8L	2.0L 4EAT	2.5L
01	Ignition Diagnostic Monitor	—	IDM	—	—	—
02	CKP Sensor	CKP	—	CKP	CKP1	CKP2
03	CID Sensor	—	CID	CID	CID	CID
04	CKP Sensor	—	—	—	—	CKP1
05	Knock Sensor	—	—	—	—	KS
08	Air Flow Meter	VAF	VAF	VAF	MAF	MC-VAF
09	ECT Sensor	ECT	ECT	ECT	ECT	ECT
10	IAT Sensor	IAT	IAT	IAT	—	IAT
11	IAT Sensor	—	—	—	IAT	—
12	TP Sensor	—	TP	TP	TP	TP
14	BARO Sensor	BARO	BARO	BARO	BARO	BARO
15	(Heated) Oxygen Sensor	O2S	O2S	O2S	HO2S	HO2S
16	EGRT Sensor/EVP Sensor	—	—	—	EGRT	EVP
17	(Heated) Oxygen Sensor	O2S	O2S	O2S	HO2S	HO2S
23	Heated Oxygen Sensor	—	—	—	—	HO2S
24	Heated Oxygen Sensor	—	—	—	—	HO2S
25	FPRC Solenoid	—	SCG	SCG	SCG	SCG
26	CANP Solenoid	SCG	SCG	SCG	SCG	SCG
28	EVR Solenoid/EGRC Solenoid	—	—	—	SCG	SCG
29	EGRV Solenoid	—	—	—	—	SCG
34	IAC Solenoid	SCG	SCG	SCG	SCG	SCG
41	HSIA Solenoid/VRIS1 Solenoid	—	—	SCG	—	SCG
46	VRIS2 Solenoid	—	—	—	—	SCG
67	LFAN Relay	—	—	—	ROC	ROC
68	HFAN Relay	—	—	—	ROC	—
69	ECTF Sensor	—	—	—	ECTF	ECTF
Codes Not Listed	—	PGC	PGC	PGC	PGC	PGC

EEC Quick Test QT7

TEST STEP		RESULT ▶	ACTION TO TAKE
QT8	PERFORM SWITCH MONITOR TEST		
	NOTE: If using the New Generation Star (NGS) Scan Tool, follow the procedure to activate and deactivate the Switch Monitor Test. • The Switch Monitor Test checks input signals from the individual input switches to the PCM. • Test all switches individually - leaving a switch ON while testing another will lead to a false test result. • Turn engine off, and allow to cool before starting Switch Monitor Test. • If using Super Star II Tester, deactivate Diagnostic Test Mode by unlatching the center button of the SUPER STAR II Tester and turning the tester OFF. • Turn all accessories off. • Apply the parking brake. • Place transaxle in NEUTRAL or PARK. • Key ON. • If using SUPER STAR II Tester, leave tester connected, turn tester ON, latch center button, and watch the output of the LED on the adapter cable as each switch is exercised. • If using VOM, jumper PCM STI to ground, connect VOM(+) lead to SML line and (-) lead to engine ground. (See illustration in QT3). • **Exercise all switches listed in QT9 and record results.**	All switches OK ▶ All switches fail ▶ One or more switches fail ▶	GO to QT11, Component Verification Test. GO to EEC Pinpoint Test SML GO to EEC Pinpoint Test(s) for all switches that fail. REFER to Test Step QT9 for the list of Pinpoint Tests.

EEC Quick Test QT8

TEST STEP		RESULT ▶	ACTION TO TAKE
QT9	SWITCH MONITOR TEST CHART		

Switch/Relay	1.3L	1.6L Non-Turbo	1.6L Turbo	1.8L	2.0L 4EAT	2.5L	Condition	Super Star II Tester / NGS Scan Tool LED, or Analog VOM Indication	EEC Pinpoint Test
A/C Selector (ACS) Switch	X	X	X	X	X	X	A/C selector switch on (and blower on for 1.3L, 1.6L and 1.8L)	LED on, or less than 1.5 volts	STG
Blower Motor (BLMT) Switch	X	X	X	X	X	X	Blower switch on 2nd or above position for 1.3L, 1.6L, 1.8L and 3rd or Hi position with mode switch on for 2.0L and 2.5L	LED on, or less than 1.5 volts	STG (ELU for 1.6L)
Brake ON/OFF (BOO) Switch	X	X	X	X MTX	X	X	Brake pedal depressed	LED on, or less than 1.5 volts	STP
Coolant Temperature Switch (CTS)	X	X	X	X			Cooling fan on low speed (ground fan if necessary)	LED on, or less than 1.5 volts	STP (ELU for 1.6L)
Daytime Running Lamp (DRL) Relay (Canada Only)						X	Parking brake released	LED on, or less than 1.5 volts	DRL
Headlamp (HDLP) Switch	X	X	X	X	X	X	Headlamp switch on	LED on, or less than 1.5 volts	STP (ELU for 1.6L)
High Cooling Fan (HFAN) Relay					X	X	Accelerator pedal depressed (fan should operate at high speed)	LED on, or less than 1.5 volts	ROC
Idle (IDL) Switch	X	X	X	X	X	X	Accelerator pedal depressed	LED on, or less than 1.5 volts	STG
Knock Control (KC)			X				Tap on engine lift bracket while engine running	LED on, or less than 1.5 volts	KC
Low Cooling Fan (LFAN) Relay					X		A/C selector switch on (fan should operate at low speed)	LED on, or less than 1.5 volts	ROC

EEC Quick Test QT9 (Part 1)

TEST STEP		RESULT ▶	ACTION TO TAKE
QT9	SWITCH MONITOR TEST CHART (CONTINUED)		

Switch/Relay	1.3L	1.6L Non-Turbo	1.6L Turbo	1.8L	2.0L 4EAT	2.5L	Condition	Super Star II Tester / NGS Scan Tool LED, or Analog VOM Indication	EEC Pinpoint Test
Manual Lever Position (MLP) Switch (ATX)	X	X		X	X	X	Selector lever in R, ⓝ, D, L for 1.3L, 1.6L, 1.8L or R, D, 2, 1 for 2.0L, 2.5L	LED on, or less than 1.5 volts	STP
Overdrive OFF Switch (ODS)					X		Overdrive OFF switch depressed	LED on, or less than 1.5 volts	STG
Park/Neutral Position (PNP) Switch / Clutch Pedal Position (CPP) Switch (MTX)	X	X	X	X		X	Transaxle in gear and clutch pedal released	LED on, or less than 1.5 volts	STG
Rear Defroster (DEF) Switch	X	X	X	X	X	X	Rear defroster switch on	LED on, or less than 1.5 volts	STP (ELU for 1.6L)
Wide Open Throttle (WOT) Switch	X		X	X MTX			Accelerator pedal fully depressed	LED off, or 12 volts	STG

EEC Quick Test QT9 (Part 2)

QT10	CHECK NO START SYMPTOM		
	• Key OFF. • Remove spark plug wire from # 1 spark plug. • Crank engine using ignition switch. • Repeat for all spark plug wires. • **Were sparks present at all wires?**	Yes ▶ No ▶	GO to FUEL DELIVERY + AIR INDUCTION GO to Ignition System

EEC Quick Test QT10

TEST STEP		RESULT ▶	ACTION TO TAKE
QT11	COMPONENT VERIFICATION TEST		
	NOTE: Refer to Emission Related Components to aid in determining possible causes of the symptom. • Refer to EEC Pinpoint Test Procedures, and perform the EEC Pinpoint Test for each component that could cause the symptom. • **Does each Pinpoint Test check out OK?**	Yes ▶ No ▶	REPEAT Test Step QT11 until all possible components have been checked. If all components check out OK, RETURN to the Diagnostic Routines. SERVICE the fault(s) as indicated in Pinpoint Test and RECHECK the symptom(s).

EEC Quick Test QT11

Clearing Diagnostic Trouble Codes

NOTE: Memory in radio, phone, and other programmable accessories may be erased when battery is disconnected.

1. Disconnect negative battery cable.
2. Depress brake pedal for 5 - 10 seconds.
3 Rerun Quick test to verify service code(s) have been cleared from memory.

DIAGNOSTIC TROUBLE CODES	DEFINITIONS
11 orc	System PASS
12 r	Cannot control rpm during KOER Self-Test high rpm check
13 r	Cannot control rpm during KOER Self-Test low rpm check
14 c	PIP circuit failure
15 o	PCM Read Only Memory (ROM) test failed
15 c	PCM Keep Alive Memory (KAM) test failed
16 r	Rpm too low to perform HO2S test
18 r	SPOUT circuit open
18 c	IDM circuit failure / SPOUT circuit grounded
19 o	Failure in PCM internal voltage
21 or	ECT out of Self-Test range
22 orc	MAP / BARO out of Self-Test range
23 or	TP out of Self-Test range
24 or	IAT out of Self-Test range
26 or	MAF out of Self-Test range
29 c	Insufficient input from the Vehicle Speed Sensor (VSS)
31 orc	EVP circuit below minimum voltage
32 orc	EVP voltage below closed limit
33 rc	EGR valve opening not detected
34 orc	EVP voltage above closed limit
35 orc	EVP circuit above maximum voltage
41 r	HO2S circuit indicates system lean (right HO2S)
41 c	No HO2S switch detected (right HO2S)
42 r	HO2S circuit indicates system rich (right HO2S)
44 r	Secondary Air Injection system inoperative (right side)
45 r	Secondary Air Injection upstream during Self-Test
46 r	Secondary Air Injection not bypassed during Self-Test
51 oc	ECT indicated -40°C (-40°F) / circuit open
53 oc	TP circuit above maximum voltage
54 oc	IAT indicated -40°C (-40°F) / circuit open
56 oc	MAF circuit above maximum voltage
61 oc	ECT indicated 123°C (254°F) / circuit grounded
63 oc	TP circuit below minimum voltage
64 oc	IAT indicated 123°C (254°F) / circuit grounded
66 c	MAF circuit below minimum voltage
67 o	Park / Neutral Position (PNP) switch circuit open - A / C ON during Self-Test
77 r	Brief WOT not sensed during Self-Test / Operator error
79 o	A / C on / Defrost on during Self-Test
81 o	Secondary Air Injection Diverter (AIRD) solenoid circuit failure
82 o	Secondary Air Injection Bypass (AIRB) solenoid circuit failure
84 o	EGR Vacuum Regulator (EVR) circuit failure
85 o	Canister Purge (CANP) circuit failure
87 oc	Fuel pump primary circuit failure
91 r	HO2S circuit indicates system lean (left HO2S)

2 Digit EEC-IV Diagnostic Trouble Code (DTC) Definitions

DIAGNOSTIC TROUBLE CODES	DEFINITIONS
91 c	No HO2S switching detected (left HO2S)
92 r	HO2S circuit indicates system rich (left HO2S)
94 r	Secondary Air Injection system inoperative (left side)
95 oc	Fuel pump secondary circuit failure
96 oc	Fuel pump secondary circuit failure
98 r	Hard fault is present - FMEM mode
NO DTC's	Unable to initiate Self-Test or unable to output DTC's
DTC's NOT LISTED	DTC's displayed are not applicable to the vehicle being tested

KEY: o = Key On Engine Off (KOEO), r = Engine Running (ER), c = Continuous Memory

TA18551A

2 Digit EEC-IV Diagnostic Trouble Code (DTC) Definitions

DIAGNOSTIC TROUBLE CODES	DEFINITIONS
111	System Pass
112	Intake Air Temp (IAT) sensor circuit below minimum voltage / 254°F indicated
113	Intake Air Temp (IAT) sensor circuit above maximum voltage / -40°F indicated
114	Intake Air Temp (IAT) higher or lower than expected
116	Engine Coolant Temp (ECT) higher or lower than expected
117	Engine Coolant Temp (ECT) sensor circuit below minimum voltage / 254°F indicated
118	Engine Coolant Temp (ECT) sensor circuit above maximum voltage / -40°F indicated
121	Closed throttle voltage higher or lower than expected
121	Indicates throttle position voltage inconsistent with the MAF sensor
122	Throttle Position (TP) sensor circuit below minimum voltage
123	Throttle Position (TP) sensor circuit above maximum voltage
124	Throttle Position (TP) sensor voltage higher than expected
125	Throttle Position (TP) sensor voltage lower than expected
126	MAP / BARO sensor higher or lower than expected
128	MAP sensor vacuum hose damaged / disconnected
129	Insufficient MAP / Mass Air Flow (MAF) change during dynamic response test KOER
136	Lack of Heated Oxygen Sensor (HO2S-2) switch during KOER, indicates lean (Bank #2)
137	Lack of Heated Oxygen Sensor (HO2S-2) switch during KOER, indicates rich (Bank #2)
138	Cold Start Injector (CSI) flow insufficient KOER
139	No Heated Oxygen Sensor (HO2S-2) switches detected (Bank #2)
144	No Heated Oxygen Sensor (HO2S-1) switches detected (Bank # 1)
157	Mass Air Flow (MAF) sensor circuit below minimum voltage
158	Mass Air Flow (MAF) sensor circuit above maximum voltage
159	Mass Air Flow (MAF) higher or lower than expected
167	Insufficient throttle position change during dynamic response test KOER
171	Fuel system at adaptive limits, Heated Oxygen Sensor (HO2S-1) unable to switch (Bank # 1)
172	Lack of Heated Oxygen Sensor (HO2S-1) switches, indicates lean (Bank # 1)
173	Lack of Heated Oxygen Sensor (HO2S-1) switches, indicates rich (Bank # 1)
175	Fuel system at adaptive limits, Heated Oxygen Sensor (HO2S-2) unable to switch (Bank #2)
176	Lack of Heated Oxygen Sensor (HO2S-2) switches, indicates lean (Bank #2)
177	Lack of Heated Oxygen Sensor (HO2S-2) switches, indicates rich (Bank #2)
179	Fuel system at lean adaptive limit at part throttle, system rich (Bank # 1)
181	Fuel system at rich adaptive limit at part throttle, system lean (Bank # 1)
184	Mass Air Flow (MAF) higher than expected
185	Mass Air Flow (MAF) lower than expected
186	Injector pulsewidth higher than expected (with BARO sensor)
186	Injector pulsewidth higher or MAF lower than expected (without BARO sensor)
187	Injector pulsewidth lower than expected (with BARO sensor)
187	Injector pulsewidth lower or MAF higher than expected (without BARO sensor)
188	Fuel system at lean adaptive limit at part throttle, system rich (Bank #2)
189	Fuel system at rich adaptive limit at part throttle, system lean (Bank #2)
193	Flexible Fuel (FF) sensor circuit failure

3 Digit EEC-IV Diagnostic Trouble Code (DTC) Definitions

DIAGNOSTIC TROUBLE CODES	DEFINITIONS
211	Profile Ignition Pickup (PIP) circuit failure
212	Loss of Ignition Diagnostic Monitor (IDM) input to PCM / SPOUT circuit grounded
213	SPOUT circuit open
214	Cylinder Identification (CID) circuit failure
215	PCM detected coil 1 primary circuit failure (EI)
216	PCM detected coil 2 primary circuit failure (EI)
217	PCM detected coil 3 primary circuit failure (EI)
218	Loss of Ignition Diagnostic Monitor (IDM) signal-left side (dual plug EI)
219	Spark timing defaulted to 10 degrees-SPOUT circuit open (EI)
221	Spark timing error (EI)
222	Loss of Ignition Diagnostic Monitor (IDM) signal-right side (dual plug EI)
223	Loss of Dual Plug Inhibit (DPI) control (dual plug EI)
224	PCM detected coil 1, 2, 3 or 4 primary circuit failure (dual plug EI)
225	Knock not sensed during dynamic response test KOER
226	Ignition Diagnostic Module (IDM) signal not received (EI)
232	PCM detected coil 1, 2, 3 or 4 primary circuit failure (EI)
238	PCM detected coil 4 primary circuit failure (EI)
241	ICM to PCM IDM pulsewidth transmission error (EI)
244	CID circuit fault present when cylinder balance test requested
311	AIR system inoperative during KOER (Bank # 1 w / dual HO2S)
312	AIR misdirected during KOER
313	AIR not bypassed during KOER
314	AIR system inoperative during KOER (Bank #2 w / dual HO2S)
326	EGR (PFE / DPFE) circuit voltage lower than expected
327	EGR (EVP / PFE / DPFE) circuit below minimum voltage
328	EGR (EVP) closed valve voltage lower than expected
332	Insufficient EGR flow detected (EVP / PFE / DPFE)
334	EGR (EVP) closed valve voltage higher than expected
335	EGR (PFE / DPFE) sensor voltage higher or lower than expected during KOEO
336	Exhaust pressure high / EGR (PFE / DPFE) circuit voltage higher than expected
337	EGR (EVP / PFE / DPFE) circuit above maximum voltage
338	Engine Coolant Temperature (ECT) lower than expected (thermostat test)
339	Engine Coolant Temperature (ECT) higher than expected (thermostat test)
341	Octane adjust service pin open
411	Cannot control RPM during KOER low RPM check
412	Cannot control RPM during KOER high RPM check
415	Idle Air Control (IAC) system at maximum adaptive lower limit
416	Idle Air Control (IAC) system at upper adaptive learning limit
452	Insufficient input from Vehicle Speed Sensor (VSS) to PCM
453	Servo leaking down (KOER IVSC test)
454	Servo leaking up (KOER IVSC test)
455	Insufficient RPM increase (KOER IVSC test)
456	Insufficient RPM decrease (KOER IVSC test)
457	Speed control command switch(s) circuit not functioning (KOEO IVSC test)

(Continued)

3 Digit EEC-IV Diagnostic Trouble Code (DTC) Definitions

• DIAGNOSTIC TROUBLE CODES	DEFINITIONS
458	Speed control command switch(s) stuck / circuit grounded (KOEO IVSC test)
459	Speed control ground circuit open (KOEO IVSC test)
511	PCM Read Only Memory (ROM) test failure KOEO
512	PCM Keep Alive Memory (KAM) test failure
513	PCM internal voltage failure (KOEO)
519	Power Steering Pressure (PSP) switch circuit open KOEO
521	Power Steering Pressure (PSP) switch circuit did not change states KOER
522	Vehicle not in PARK or NEUTRAL during KOEO / PNP switch circuit open
524	Low speed fuel pump circuit open—battery to PCM
525	Indicates vehicle in gear / A / C on
527	Park / Neutral Position (PNP) switch circuit open—A / C on KOEO
528	Clutch Pedal Position (CPP) switch circuit failure
529	Data Communication Link (DCL) or PCM circuit failure
532	Cluster Control Assembly (CCA) circuit failure
533	Data Communication Link (DCL) or Electronic Instrument Cluster (EIC) circuit failure
536	Brake On / Off (BOO) circuit failure / not actuated during KOER
538	Insufficient RPM change during KOER dynamic response test
538	Invalid cylinder balance test due to throttle movement during test (SFI only)
538	Invalid cylinder balance test due to CID circuit failure
539	A / C on / Defrost on during Self-Test
542	Fuel pump secondary circuit failure
543	Fuel pump secondary circuit failure
551	Idle Air Control (IAC) circuit failure KOEO
552	Secondary Air Injection Bypass (AIRB) circuit failure KOEO
553	Secondary Air Injection Diverter (AIRD) circuit failure KOEO
554	Fuel Pressure Regulator Control (FPRC) circuit failure
556	Fuel pump relay primary circuit failure
557	Low speed fuel pump primary circuit failure
558	EGR Vacuum Regulator (EVR) circuit failure KOEO
559	Air Conditioning On (ACON) relay circuit failure KOEO
563	High Fan Control (HFC) circuit failure KOEO
564	Fan Control (FC) circuit failure KOEO
565	Canister Purge (CANP) circuit failure KOEO
566	3-4 shift solenoid circuit failure KOEO (A4LD)
567	Speed Control Vent (SCVNT) circuit failure (KOEO IVSC test)
568	Speed Control Vacuum (SCVAC) circuit failure (KOEO IVSC test)
569	Auxiliary Canister Purge (CANP2) circuit failure KOEO
578	A / C pressure sensor circuit shorted (VCRM module)
579	Insufficient A / C pressure change (VCRM module)
581	Power to Fan circuit over current (VCRM module)
582	Fan circuit open (VCRM module)
583	Power to Fuel pump over current (VCRM module)
584	Power ground circuit open (Pin 1) (VCRM module)

3 Digit EEC-IV Diagnostic Trouble Code (DTC) Definitions

DIAGNOSTIC TROUBLE CODES	DEFINITIONS
585	Power to A/C clutch over current (VCRM module)
586	A/C clutch circuit open (VCRM module)
587	Variable Control Relay Module (VCRM) communication failure
617	1-2 shift error
618	2-3 shift error
619	3-4 shift error
621	Shift Solenoid 1 (SS1) circuit failure KOEO
622	Shift Solenoid 2 (SS2) circuit failure KOEO
624	Electronic Pressure Control (EPC) circuit failure
625	Electronic Pressure Control (EPC) driver open in PCM
626	Coast Clutch Solenoid (CCS) circuit failure KOEO
627	Torque Converter Clutch (TCC) solenoid circuit failure
628	Excessive converter clutch slippage
629	Torque Converter Clutch (TCC) solenoid circuit failure
631	Transmission Control Indicator Lamp (TCIL) circuit failure KOEO
632	Transmission Control Switch (TCS) circuit did not change states during KOER
633	4x4L switch closed during KOEO
634	Manual Lever Position (MLP) voltage higher or lower than expected
636	Transmission Oil Temp (TOT) higher or lower than expected
637	Transmission Oil Temp (TOT) sensor circuit above maximum voltage / -40°F (-40°C) indicated / circuit open
638	Transmission Oil Temp (TOT) sensor circuit below minimum voltage / 290°F (143°C) indicated / circuit shorted
639	Insufficient input from Transmission Speed Sensor (TSS)
641	Shift Solenoid 3 (SS3) circuit failure
643	Torque Converter Clutch (TCC) circuit failure
645	Incorrect gear ratio obtained for first gear
646	Incorrect gear ratio obtained for second gear
647	Incorrect gear ratio obtained for third gear
648	Incorrect gear ratio obtained for fourth gear
649	Electronic Pressure Control (EPC) higher or lower than expected
651	Electronic Pressure Control (EPC) circuit failure
652	Torque Converter Clutch (TCC) solenoid circuit failure
654	Manual Lever Position (MLP) sensor not indicating PARK during KOEO
656	Torque Converter Clutch continuous slip error
657	Transmission over temperature condition occurred
998	Hard fault present ****FMEM MODE****

TA18552A

3 Digit EEC-IV Diagnostic Trouble Code (DTC) Definitions

With EEC IV (OBD I-B System)

CODE	CODE DEFINITION
02	Crankshaft Position Sensor
03	Cylinder Identification Sensor
06	Vehicle Speed Sensor
08	Mass Air Flow Sensor
09	Engine Coolant Temperature Sensor
11	Intake Air Temperature Sensor
12	Throttle Position Sensor
14	Barometric Pressure Sensor
15	Heated Oxygen Sensor - voltage always below 0.55V
16	EGR Temperature Sensor
17	Heated Oxygen Sensor - voltage does not change
25	Fuel Pressure Regulator Control Solenoid

26	Canister Purge Solenoid
28	EGR Vacuum Regulator Solenoid
34	Idle Air Control Solenoid
55	Pulse Signal Generator
56	Transaxle Oil Temperature Sensor
60	1 - 2 Shift Solenoid
61	2 - 3 Shift Solenoid
62	3 - 4 Shift Solenoid
63	Torque Converter Clutch Control Solenoid
64	Downshift Solenoid
65	Torque Converter Clutch Solenoid
66	Line Pressure Solenoid
67	Low Cooling Fan Relay
68	High Cooling Fan Relay
69	Cooling Fan Engine Coolant Temp. Sensor

Diagnostic Trouble Code (DTC)	Application	Section 6A Pinpoint Test Step Go to Direction		
		KOEO	ER	Cont
175	All Others	—	—	H1
176	3.0L FF Taurus	—	—	HB1
176	All Others	—	—	H1
177	3.0L FF Taurus	—	—	HB1
177	All Others	—	—	H1
178	All	—	—	H1
179	All	—	—	HA1
181	All	—	—	HA1
182	All	—	—	HA1
183	All	—	—	HA1
184	All	—	—	G6
185	All	—	—	G6
186	All	—	—	G6
187	All	—	—	G6
188	All	—	—	HA1
189	All	—	—	HA1
192	All	—	—	HA1
193	All	DE1	—	—
194	All	—	—	H5
195	All	—	—	H5
211	Distributor Ignition (DI)	—	—	NA1
211	Electronic Ignition (EI)-Low Data Rate	—	—	NB1
211	Electronic Ignition (EI)-High Data Rate	—	—	NC1
212	Distributor Ignition (DI)	—	—	NA2
212	Electronic Ignition (EI)-Low Data Rate except 2.3L Mustang	—	—	NB2
212	2.3L Mustang	—	—	Ignition System
212	Electronic Ignition (EI)-High Data Rate	—	—	NC3
213	Distributor Ignition (DI)	—	PA1	—
213	Electronic Ignition (EI)-Low Data Rate	—	PB1	—
213	Electronic Ignition (EI)-High Data Rate	—	PC1	—
214	All	—	—	DR1
215	All	—	—	Ignition System
216	All	—	—	Ignition System
217	All	—	—	Ignition System
218	All	—	—	Ignition System
219	All	—	—	PB10

175-219 Updated By TSB

Diagnostic Trouble Code (DTC)	Application	Pinpoint Test Step Go to Direction		
		KOEO	ER	Cont
No DTC's	All	QA1	QA1	QA1
111	All	Pass	Pass	Pass
112	All	DA20	—	DA90
113	All	DA10	—	DA90
114	All	DA1	DA1	—
116	All	DA1	DA1	—
117	All	DA20	—	DA90
118	All	DA10	—	DA90
121	All	DH2	DH1	G1
122	All	DH10	—	DH94
123	All	DH3	—	DH90
124	All	—	—	G1
125	All	—	—	G1
126	All	DF1	DF1	DF90
128	All	—	—	DF11
129	All Cars, Ranger, Aerostar, Explorer, 5.0L SFI E-Series	—	DC13	—
129	All Other Trucks	—	DF10	—
136	3.0L FF Taurus	—	HB1	—
136	All Others	—	H1	—
137	3.0L FF Taurus	—	HB1	—
137	All Others	—	H1	—
138	All	—	HB26	—
139	All	—	—	H1
141	3.0L FF Taurus	—	—	HB1
144	All	—	—	H1
157	All	—	—	DC10
158	All	DC21	—	DC21
159	All	DC1	DC1	—
167	All	—	DH20	—
171	3.0L FF Taurus	—	—	HB1
171	All Others	—	—	H1
172	3.0L FF Taurus	—	HB1	HB1
172	All Others	—	H1	H1
173	3.0L FF Taurus	—	HB1	HB1
173	All Others	—	H1	H1
174	All	—	—	H1
175	3.0L FF Taurus	—	—	HB1

111-175 Updated By TSB

Diagnostic Trouble Code (DTC)	Application	Pinpoint Test Step Go to Direction		
		KOEO	ER	Cont
222	All	—	—	Ignition System
223	All	—	—	Ignition System
224	All	—	—	Ignition System
225	All	—	DG1	—
226	All	NC2	—	—
232	All	—	—	Ignition System
238	All	—	—	Ignition System
311	All	—	KC1	—
312	All	—	KC1	—
313	All	—	KC1	—
314	All	—	KC1	—
326	2.0L Probe	—	—	DB10
326	3.0L Taurus (Flex Fuel) 3.8L Taurus / Sable (Calif) 3.2L Taurus SHO, Town Car, Mark VIII 3.0L Ranger 4.0L SFI Ranger / Explorer	—	DL22	—
326	All Others With PFE or DPFE EGR System	—	DL20	DL90
327	2.0L Probe	—	—	DB1
327	Mustang, Thunderbird / Cougar (5.0L only), Bronco, Ranger (49 States), & All E/F Series	DN1	DN1	DN90
327	3.0L Taurus Flex Fuel 3.8L Taurus / Sable (Calif) 3.2L Taurus SHO, Town Car, Mark VIII 3.0L Ranger 4.0L Ranger / Explorer (Calif)	DL1	DL22	DL90
327	All Others With PFE or DPFE EGR System	DL1	DL21	DL90
328	All	DN25	DN25	DN90
332	2.0L Probe	—	—	DB20
332	Mustang, Thunderbird / Cougar (5.0L only), Bronco, Ranger (49 States), & All E/F Series	—	DN40	DN110
332	All Others With PFE or DPFE EGR System	—	DL30	DL90
334	All	DN20	DN20	DN115
335	All With PFE or DPFE EGR System	DL8	—	—
336	3.0L Taurus Flex Fuel 3.8L Taurus / Sable (Calif) 3.2L Taurus SHO, Town Car, Mark VIII 3.0L Ranger 4.0L SFI Ranger / Explorer	—	DL50	DL90
336	All Others With PFE or DPFE EGR System	—	DL25	DL90
337	2.0L Probe	—	—	DB5
337	Mustang, Thunderbird / Cougar (5.0L only), Bronco, Ranger (49 States), & All E/F Series	DN5	DN5	DN90

222-337 Updated By TSB

Diagnostic Trouble Code (DTC)	Application	Pinpoint Test Step Go to Direction		
		KOEO	ER	Cont
337	3.0L Taurus Flex Fuel 3.8L Taurus / Sable (Calif) 3.2L Taurus SHO, Town Car, Mark VIII 3.0L Ranger 4.0L SFI Ranger / Explorer	DL5	DL50	DL90
337	All Others With PFE or DPFE EGR System	DL5	DL25	DL90
338	All	—	—	DA100
339	All	—	—	DA101
341	All	KP1	—	—
411	All	—	KE15	—
412	All	—	KE1	—
415	All	—	—	KE30
416	All	—	—	KE35
452	Aerostar, E-Series / F-Series Trucks, Bronco	—	—	DS1
452	All Others	—	—	DP1
511	All	Replace PCM		
512	All	—	—	QB1
513	All	Replace PCM		
519	2.0L Probe	FF10	—	—
519	All Others	FF1	—	—
521	2.0L Probe	—	FF20	—
521	All Others	—	FF5	—
522	Continental, Taurus / Sable except 3.0L SHO, Crown Victoria / Grand Marquis with AODE, Town Car, Mark VIII	TD1	—	—
522	All Others	TA1	—	—
524	3.0L Taurus SHO	X98	—	X110
524	Mark VIII	XB135	—	XB150
524	3.0L Taurus Flex Fuel (FF)	X88	—	X110
525	All	TA1	—	TA1
528	All	—	—	TA1
529	All	—	—	ML25
533	All	—	—	ML25
536	All	—	FD1	FD90
538	All	—	M1	—
539	2.0L Probe	KM70	—	—
539	All Others	KM40	KM40	—
542	2.3L Mustang, Tempo / Topaz, Taurus / Sable, Continental	X80	—	X105
542	Mark VIII	XB120	—	XB155
542	All Others	J10	—	J90
543	Tempo / Topaz, 2.3L Mustang, Taurus / Sable, Continental	X90	—	X110
543	Mark VIII	XB135	—	XB150

337-543 Updated By TSB

Diagnostic Trouble Code (DTC)	Application	Pinpoint Test Step Go to Direction		
		KOEO	ER	Cont
543	All Others	J20	—	J93
551	All	KT1	—	—
552	All	KC8	—	—
553	All	KC8	—	—
554	All	KN1	—	—
556	Tempo/Topaz, 2.3L Mustang, Taurus/Sable, Continental	X70	—	X115
556	Mark VIII	XB110	—	XB150
556	All Others	J1	—	J95
557	3.0L Taurus SHO	X70	—	X115
557	Taurus Flex Fuel (FF)	X75	—	X115
558	Mustang, Thunderbird/Cougar (5.0L Only), Bronco, Ranger (49 States), All E/F Series	DN10	—	—
558	2.0L Probe	KA1	—	—
558	All Others With PFE or DPFE EGR System	DL11	—	—
559	All	KM60	—	—
563	Escort/Tracer, 2.0L Probe	KF1	—	—
563	All Others	X15	—	—
564	Escort/Tracer, 2.0L Probe	KF1	—	—
564	All Others	X20	—	—
565	3.0L Taurus Flexible Fuel (FF)	KB1	—	—
565	All Others	KD6	—	—
566	All	TC1	—	—
569	All	KD6	—	—
578	All	—	—	XB40
579	All	—	—	XB50
581	All	—	—	XB20
582	All	XB30	—	—
583	All	—	—	XB135
584	All	—	—	XB15
585	All	—	—	XB70
586	All	—	—	XB80
587	All	XB170	—	XB170
617	All	—	—	TG90
618	All	—	—	TG90
619	All	—	—	TG90
621	Escort/Tracer	TC20	—	TC30
621	All Others	TC1	—	—
622	Escort/Tracer	TC20	—	TC30

543-622 Updated By TSB

Diagnostic Trouble Code (DTC)	Application	Pinpoint Test Step Go to Direction		
		KOEO	ER	Cont
622	All Others	TC1	—	—
624	All	TC10	—	TG90
625	All	TC10	—	TG90
626	All	TC1	—	—
627	All	TC1	—	—
628	All	—	—	TG90
629	All	TC1	—	TG90
631	All	TB3	—	—
632	All	—	TB2	—
633	All	TB1	—	—
634	Escort/Tracer	—	—	TD10
634	E-Series/F-Series Trucks, Bronco	TD1	—	TD1
634	All Others	TD1	—	TG90
636	All	TE1	TE1	—
637	Escort/Tracer	TE10	—	TE90
637	All Others	TE10	—	TG90
638	Escort/Tracer	TE20	—	TE90
638	All Others	TE20	—	TG90
639	Escort/Tracer	—	TF10	TF95
639	All Others	—	TF1	TF90
641	Escort/Tracer	TC20	—	TC30
641	All Others	TC1	—	—
643	All	TC20	—	TC30
645	All	—	—	TG90
646	All	—	—	TG90
647	All	—	—	TG90
648	All	—	—	TG90
649	All	—	—	TG90
651	All	—	—	TG90
652	All	TC1	—	—
654	All	TD1	—	—
656	All	—	—	TG90
657	All	—	—	TE100
998	All	TC10	[2]	
DTC's Not Listed	All	QA1	QA1	QA1

622-998 Updated By TSB

Diagnostic Trouble Code (DTC)	Application	Pinpoint Test Step GO to Direction		
		KOEO	ER	CONT
No DTC's	All	QA1	QA1	QA1
11	All	Pass	Pass	Pass
12	All	—	KE1	—
13	All	—	KE15	—
14	7.3L Diesel	—	—	DJ1
14	All Others	—	—	NA1
15	All	Replace PCM		QB1
16	All	—	KE1	—
18	All	—	PA1	NA3
19	All	Replace PCM		—
21	All	DA1	DA1	—
22	Mustang	DF1	DF1	DF90
22	All Others	DF1	DF7	DF90
23	7.3L Diesel	DQ1	DQ1	—
23	All Others	DH2	DH1	—
24	All	DA1	DA1	—
25	All	—	DG1	—
26	E-Series/F-Series Trucks, Bronco	TE1	TE1	—
26	All Others	DC1	DC1	—
29	E-Series/F-Series Truck, Bronco	—	—	DS1
29	All Others	—	—	DP1
31	All	DN1	DN1	DN90
32	All	DN25	DN25	DN90
33	7.3L Diesel	—	—	DQ97
33	All Others	—	DN40	DN110
34	All	DN20	DN20	DN115
35	All	DN5	DN5	DN90
41	All	—	H1	H1
42	All	—	H1	—
43	All	—	—	DQ100
44	All	—	KC1	—
45	All	—	KC1	—
46	All	—	KC1	—
47	All	TB1	—	
49	All	—	—	TG90
51	All	DA10	—	DA90
52	All	FF1	FF5	—
53	7.3L Diesel	DQ2	—	DQ90

Diagnostic Trouble Code Chart

Diagnostic Trouble Code (DTC)	Application	Pinpoint Test Step GO to Direction		
		KOEO	ER	CONT
53	All Others	DH3	—	DH90
54	All	DA10	—	DA90
56	E-Series/F-Series Trucks, Bronco	TE10	—	TG90
56	All Others	DC21	—	DC21
57	All	KP1	—	—
59	All	—	—	TG90
61	All	DA20	—	DA90
62	All	—	—	TG90
63	7.3L Diesel	DQ10	—	DQ94
63	All Others	DH10	—	DH94
64	All	DA20	—	DA90
65	All	—	TB2	—
66	E-Series/F-Series Trucks, Bronco	TE20	—	TG90
66	All Others	—	—	DC10
67	All E-Series/F-Series Trucks and Bronco except 4.9L M/T	KM40	—	TG90
67	All Others	TA1	—	TA1
68	All	—	—	TE100
69	All	—	—	TG90
72	All	—	DF10	—
73	All	—	DH20	—
74	All	—	FD1	—
75	All	—	FD10	—
77	All	—	M1	—
79	All	KM40	—	—
81	All	KC8	—	DF11
82	All	KC8	—	—
84	All	DN10	—	—
85	All	KD6	—	—
86	All	TC1	—	—
87	All	J1	—	J95
89	All	TC1	—	—
91	All	TC1	H1	H1
92	All	TC1	H1	—
93	All	TC1	—	—
94	All	TC1	KC1	—
95	All	J10	—	J90
96	All	J20	—	J93

Diagnostic Trouble Code Chart

Diagnostic Trouble Code (DTC)	Application	Pinpoint Test Step GO to Direction		
		KOEO	ER	CONT
97	All	TB3	—	—
98	All	TC10		
99	All	TC10	—	TG90
Codes Not Listed	All	QA1	QA1	QA1

Diagnostic Trouble Code Chart

TEST STEP		RESULT ▶	ACTION TO TAKE
QT7	DIAGNOSTIC TROUBLE CODE CHART		

Diagnostic Trouble Code	Component	Pinpoint Test Step Direction				
		1.3L	1.6L	1.8L	2.0L 4EAT	2.5L
01	Ignition Diagnostic Monitor	—	IDM	—	—	—
02	CKP Sensor	CKP	—	CKP	CKP1	CKP2
03	CID Sensor	—	CID	CID	CID	CID
04	CKP Sensor	—	—	—	—	CKP1
05	Knock Sensor	—	—	—	—	KS
08	Air Flow Meter	VAF	VAF	VAF	MAF	MC-VAF
09	ECT Sensor	ECT	ECT	ECT	ECT	ECT
10	IAT Sensor	IAT	IAT	IAT	—	IAT
11	IAT Sensor	—	—	—	IAT	—
12	TP Sensor	—	TP	TP	TP	TP
14	BARO Sensor	BARO	BARO	BARO	BARO	BARO
15	(Heated) Oxygen Sensor	O2S	O2S	O2S	HO2S	HO2S
16	EGRT Sensor/EVP Sensor	—	—	—	EGRT	EVP
17	(Heated) Oxygen Sensor	O2S	O2S	O2S	HO2S	HO2S
23	Heated Oxygen Sensor	—	—	—	—	HO2S
24	Heated Oxygen Sensor	—	—	—	—	HO2S
25	FPRC Solenoid	—	SCG	SCG	SCG	SCG
26	CANP Solenoid	SCG	SCG	SCG	SCG	SCG
28	EVR Solenoid/EGRC Solenoid	—	—	—	SCG	SCG
29	EGRV Solenoid	—	—	—	—	SCG
34	IAC Solenoid	SCG	SCG	SCG	SCG	SCG
41	HSIA Solenoid/VRIS1 Solenoid	—	—	SCG	—	SCG
46	VRIS2 Solenoid	—	—	—	—	SCG
67	LFAN Relay	—	—	—	ROC	ROC
68	HFAN Relay	—	—	—	ROC	—
69	ECTF Sensor	—	—	—	ECTF	ECTF
Codes Not Listed	—	PGC	PGC	PGC	PGC	PGC

EEC Quick Test QT7

Symptom	OASIS Number
Starting Concerns	—
—No Crank	601300

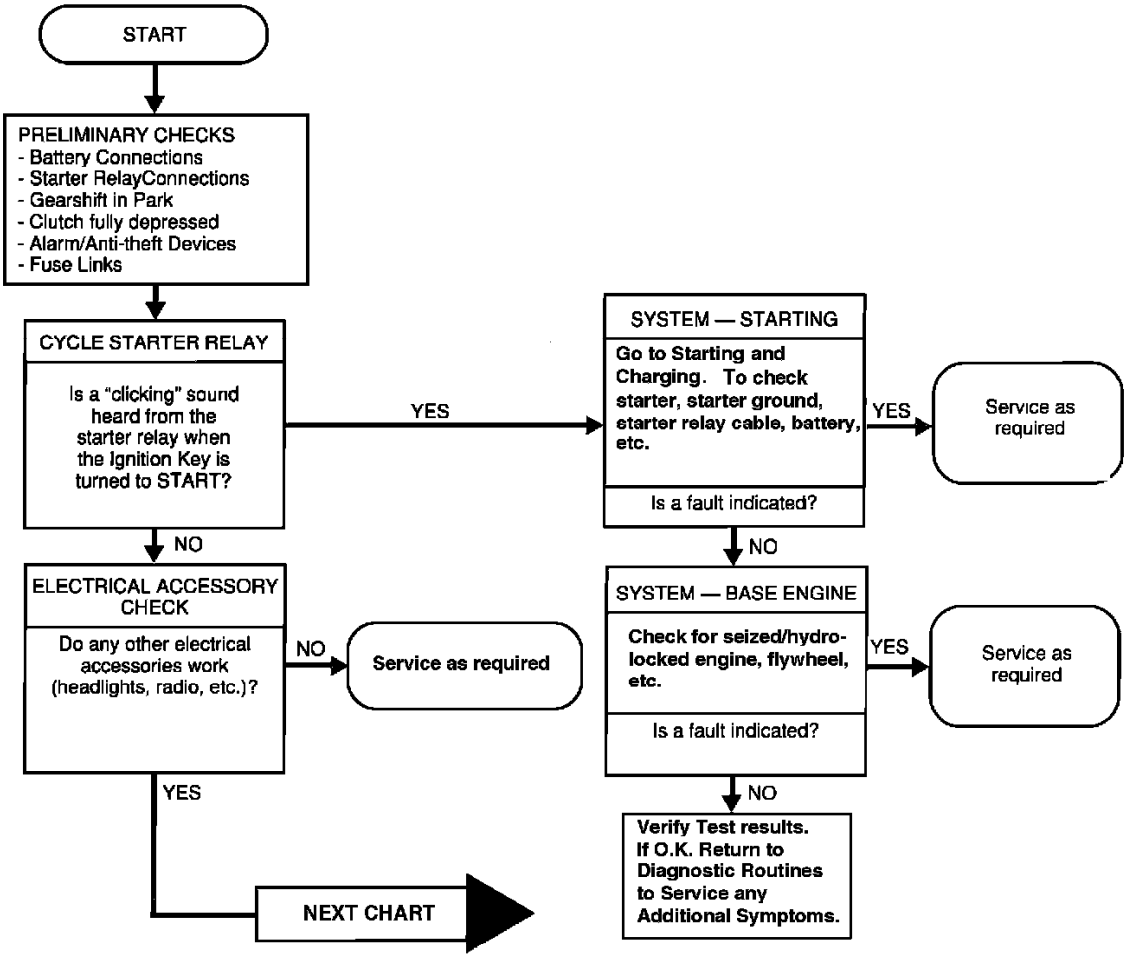

Chart 1 (Part 1 of 2)

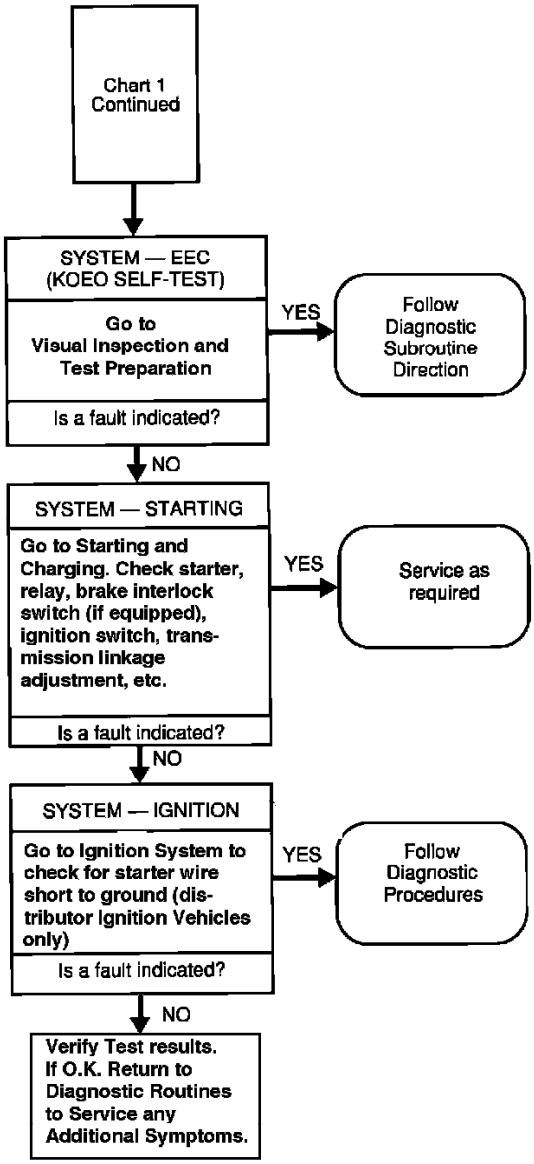

Chart 1 (Part 2 of 2)

Symptom	OASIS Number
Starting Concerns —Hard Start / Long Crank —Erratic Start / Erratic Crank	602300

NOTE: **It is good practice to confirm that the correct starting procedure was being used by the customer before proceeding with diagnosis.**

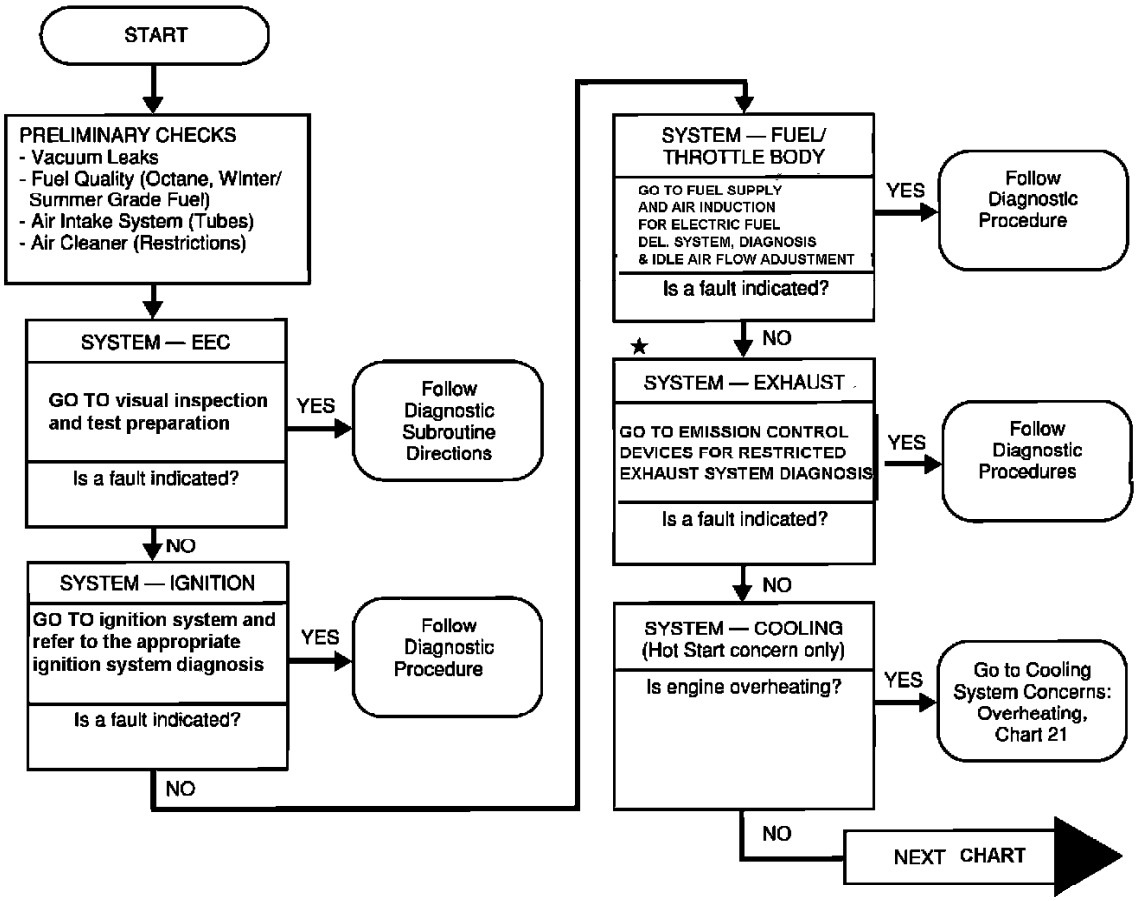

Diagnosis By Symptom Flow Chart

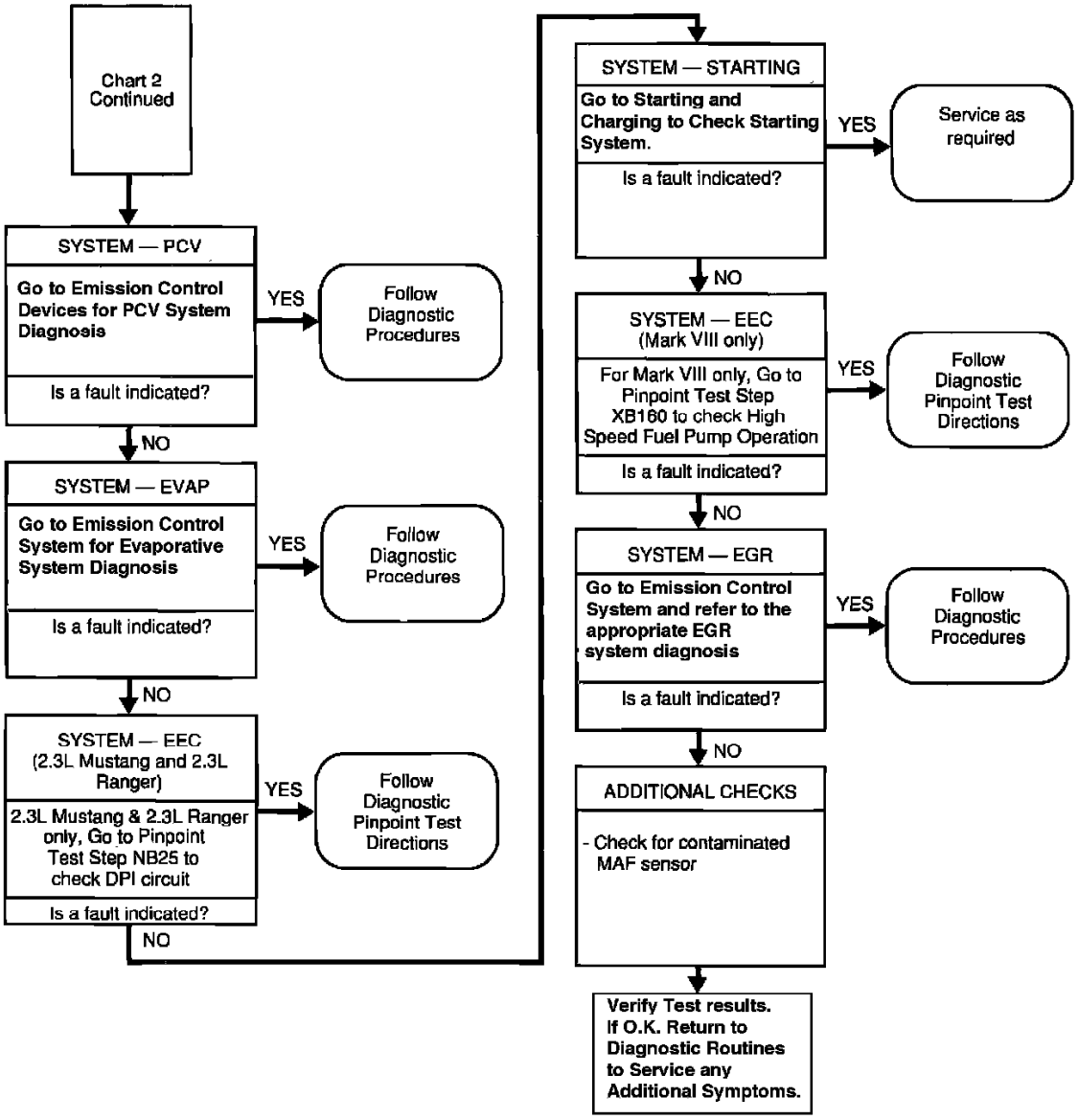

Diagnosis By Symptom Flow Chart

Symptom	OASIS Number
Starting Concerns —Stalls After Start	
Stalls/Quits —Idle	607000 607400

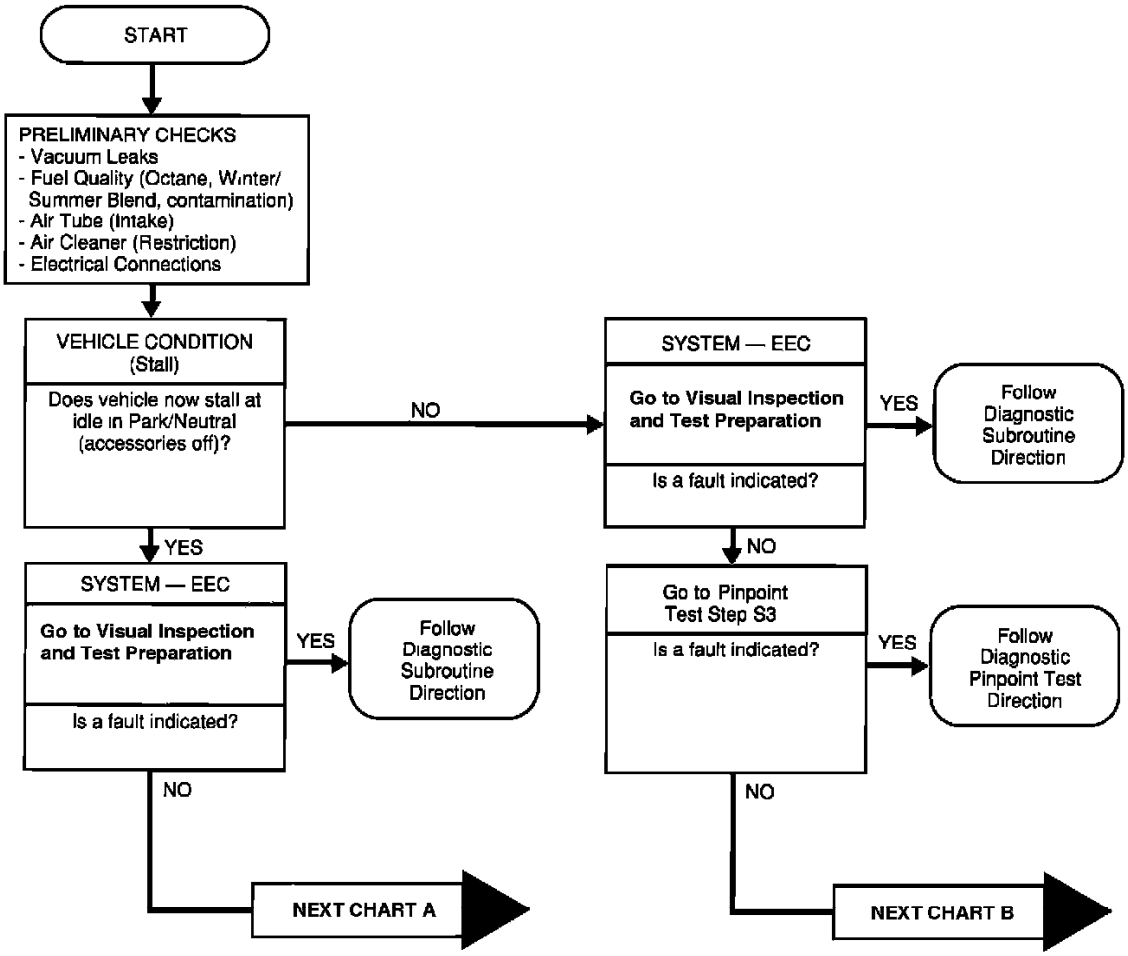

Chart 3 (Part 1 of 3)

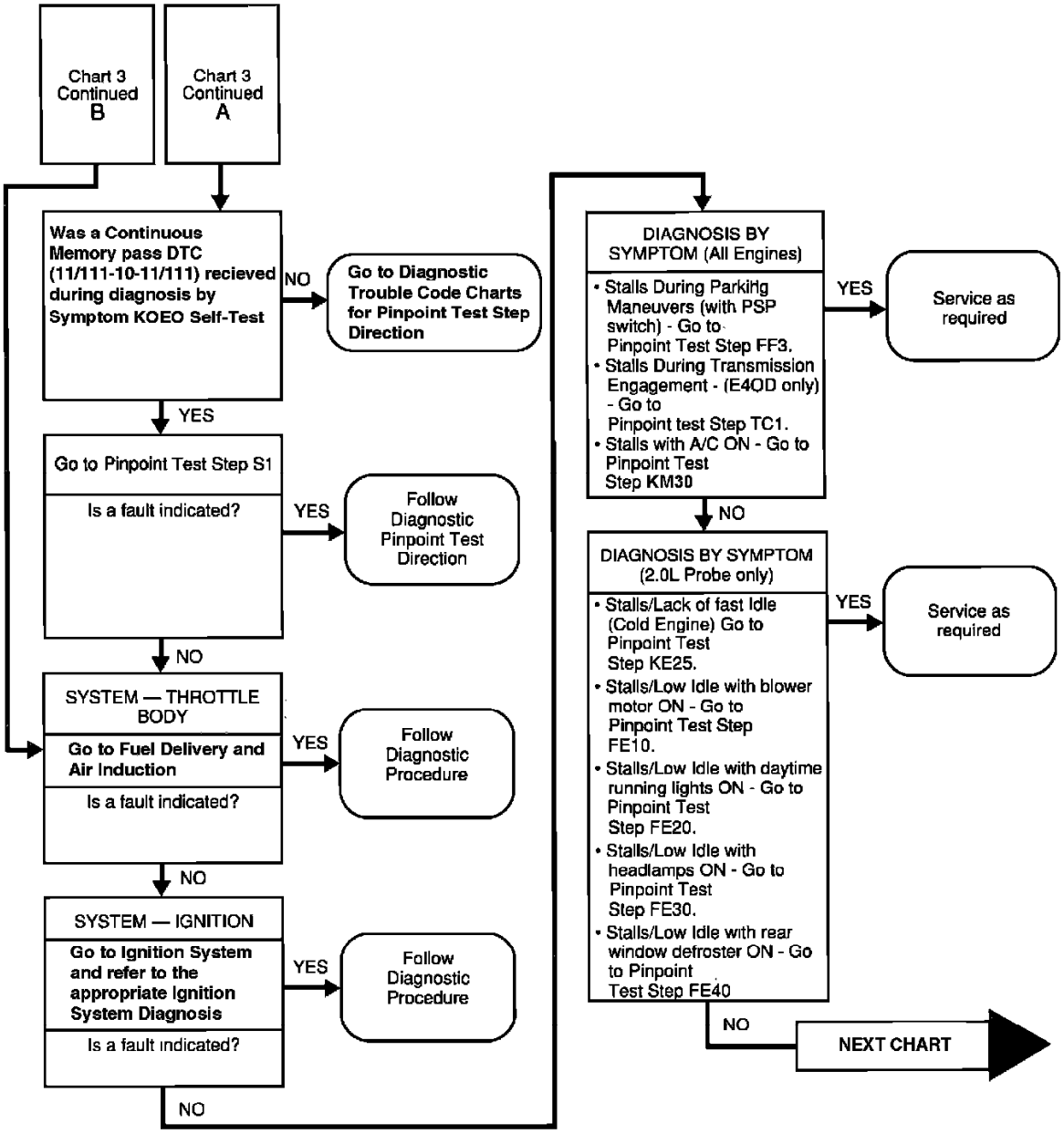

Diagnosis By Symptom Flow Chart

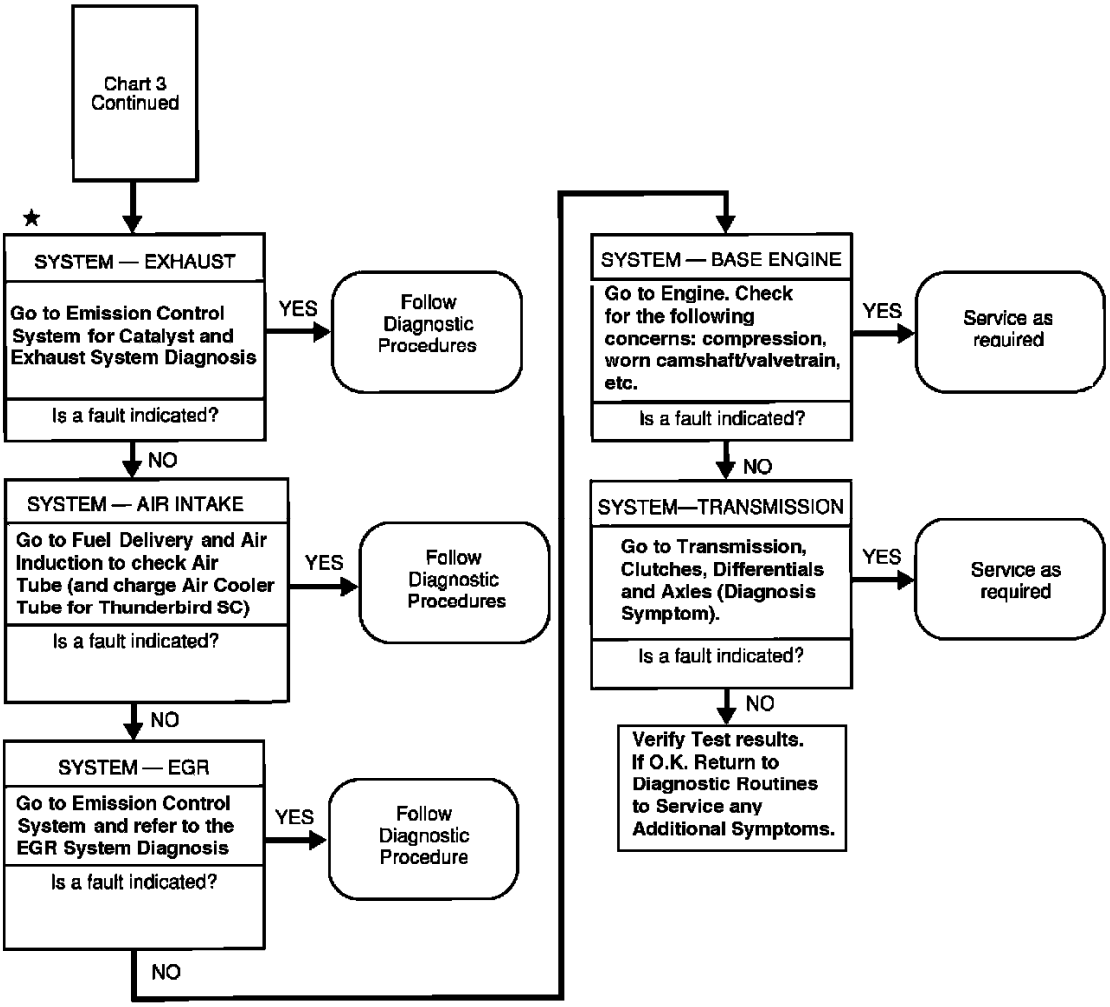

★ The technician is not required to adhere to the flow chart order specified from this Routine and beyond due to variations in vehicle type, system accessibility, vehicle history or technician experience.

Diagnosis By Symptom Flow Chart

Symptom	OASIS Number
Starting Concerns —No Start/Normal Crank	603300

NOTE: **Extended cranking because of a "No Start" can load the exhaust system with raw fuel, which can damage the catalytic converter after the engine starts. After the "No Start" condition has been repaired, disconnect the secondary air supply, run the engine until surplus fuel is used up, and reconnect the secondary air supply.**

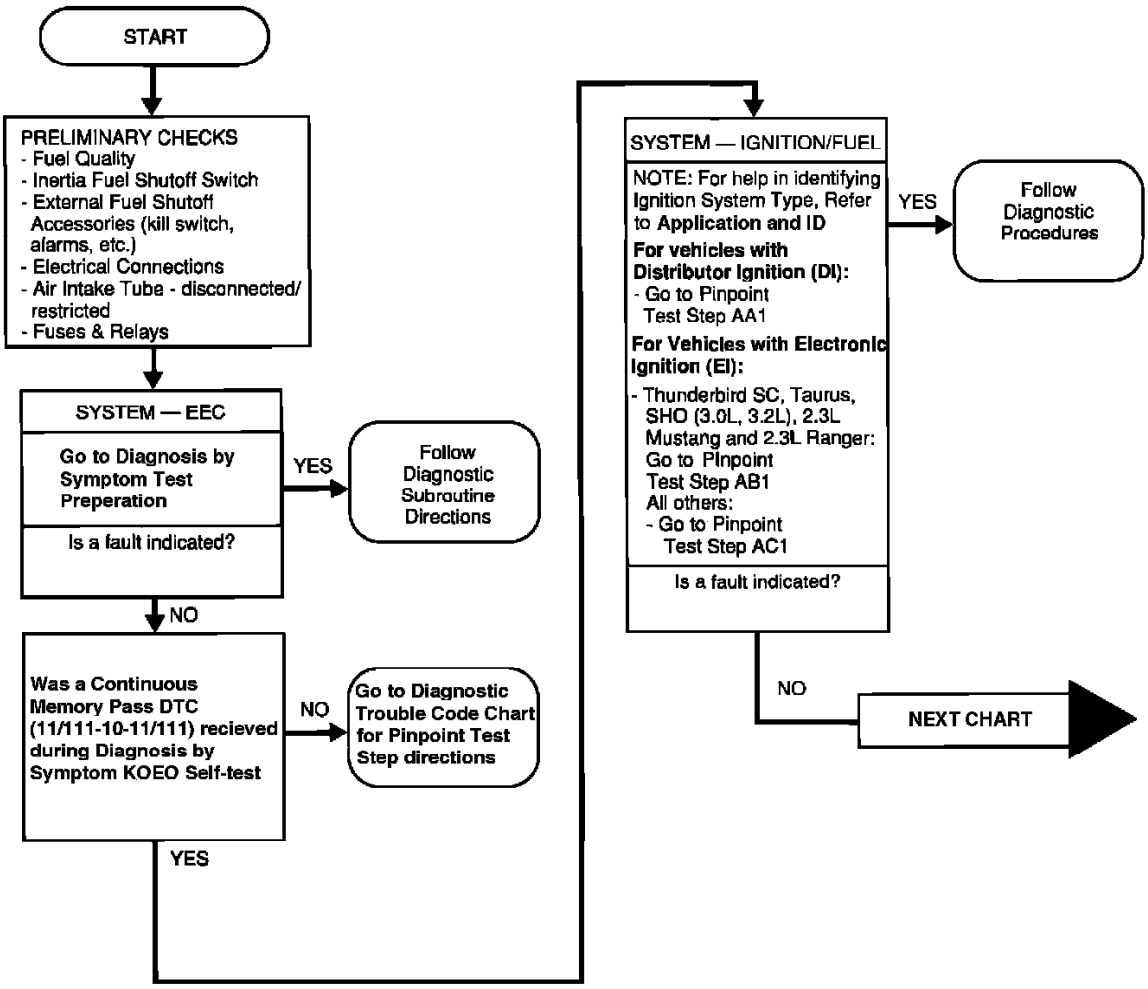

Diagnosis By Symptom Flow Chart

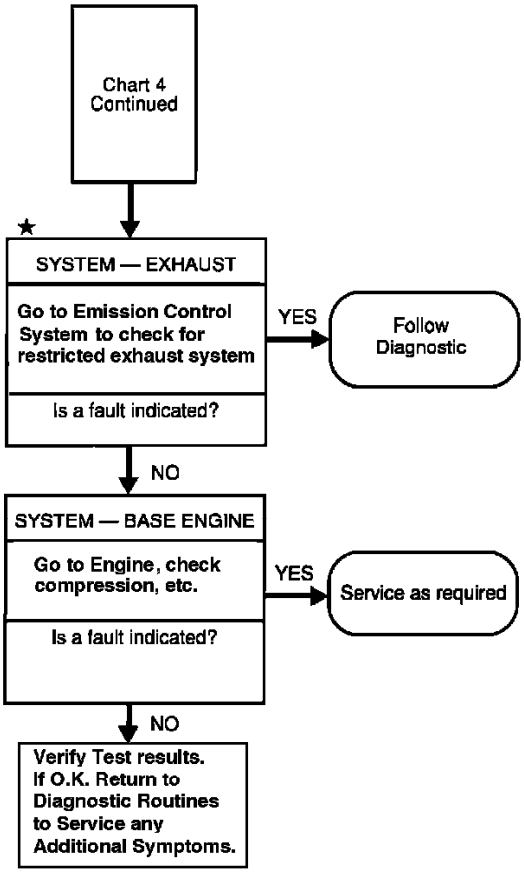

★ The technician is not required to adhere to the flow chart order specified from this Routine and beyond due to variations in vehicle type, system accessibility, vehicle history or technician experience.

Chart 4 (Part 2 of 2)

Symptom	OASIS Number
Unique Idle Concerns —Slow Return to Idle	617400

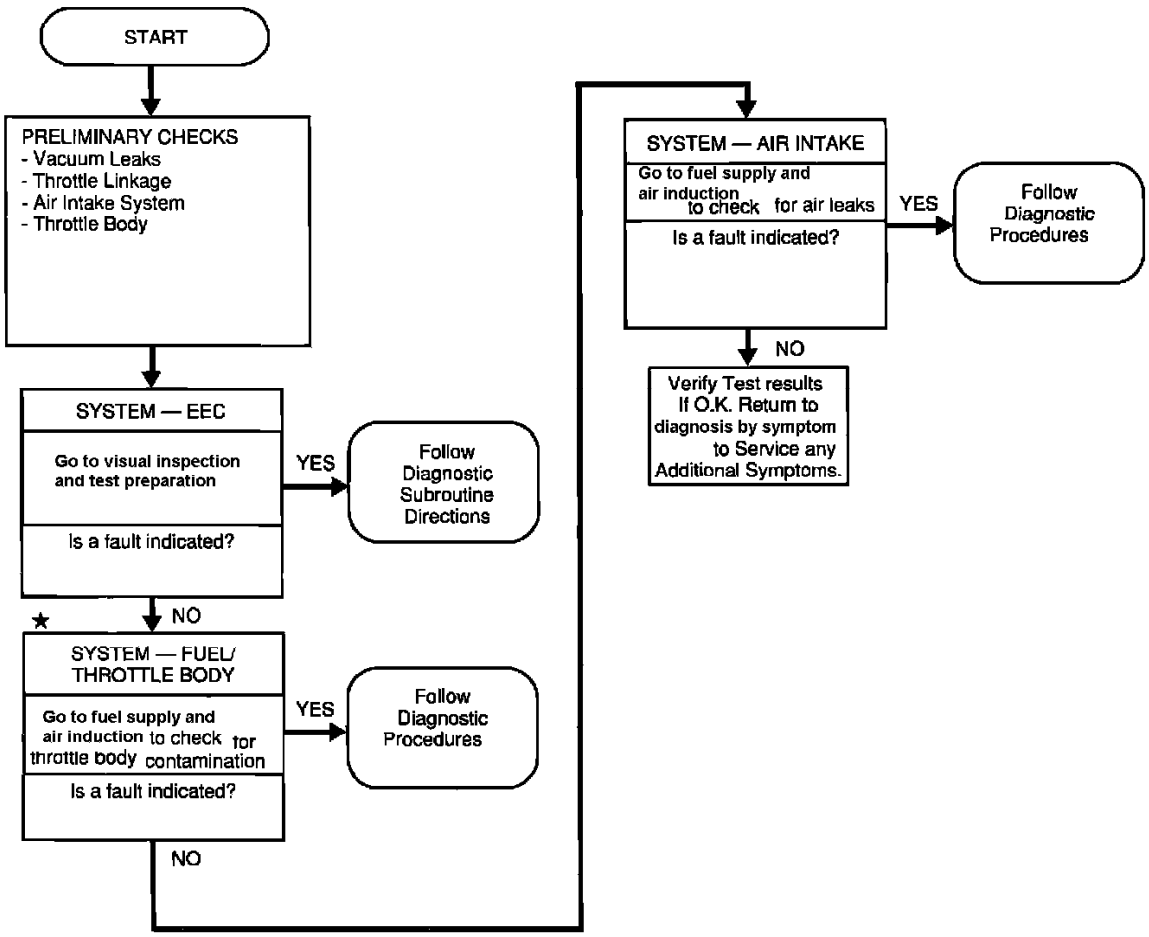

★ The technician is not required to adhere to the flow chart order specified from this Routine and beyond due to variations in vehicle type, system accessibility, vehicle history or technician experience.

Diagnosis By Symptom Flow Chart

Symptom	OASIS Number
Unique Idle Concerns —Rolling Idle	618400
Runs Rough —Idle	608000 608400

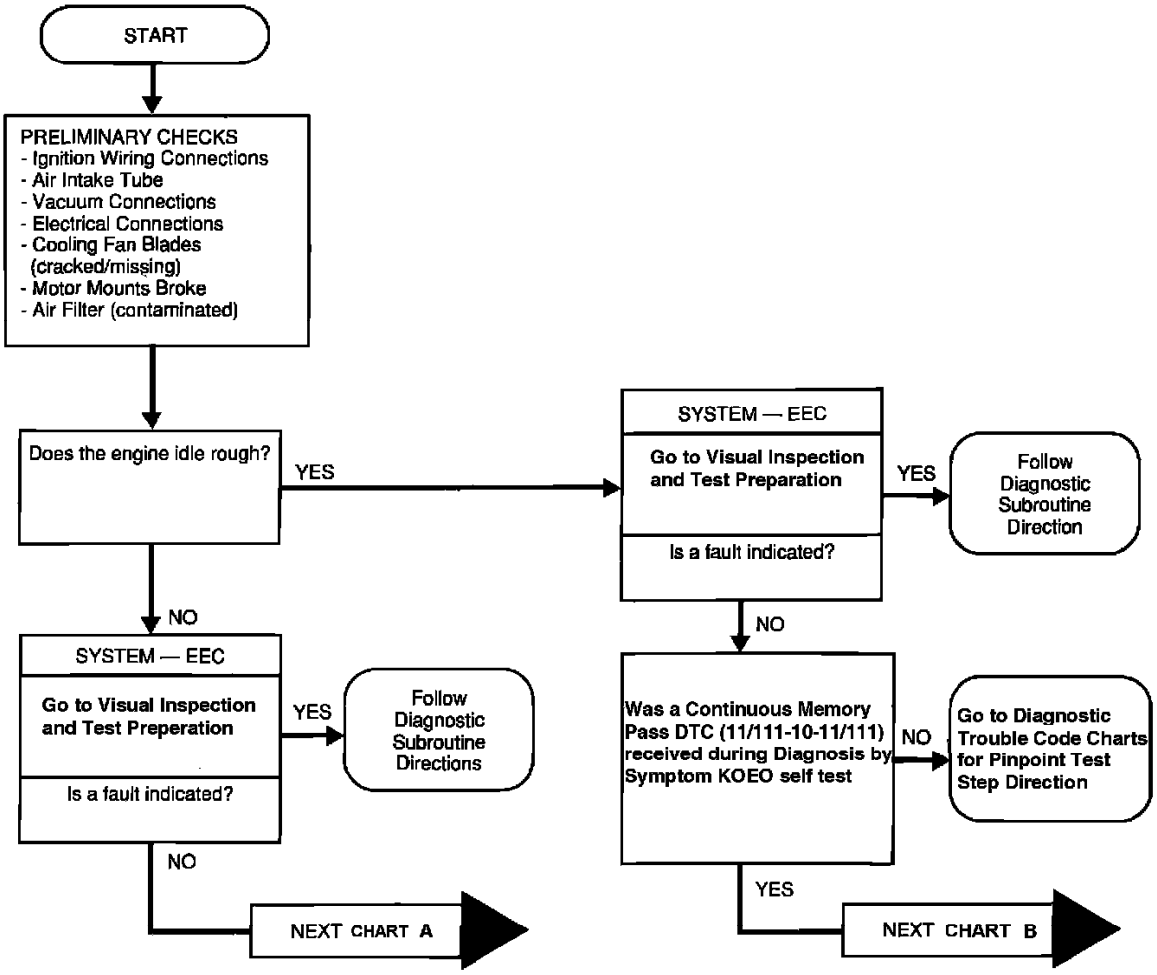

Chart 6 (Part 1 Of 4)

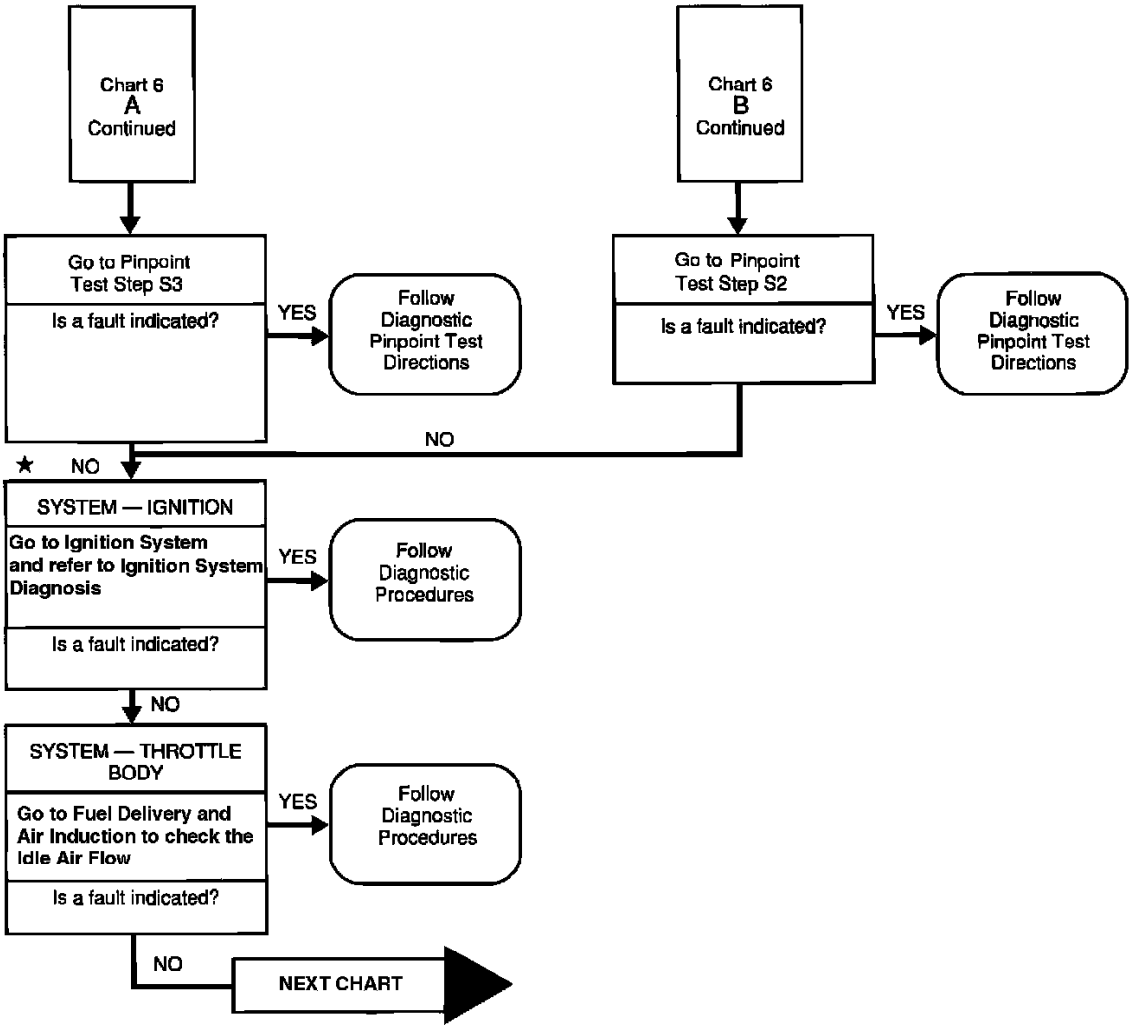

★ The technician is not required to adhere to the flow chart order specified from this Routine and beyond due to variations in vehicle type, system accessibility, vehicle history or technician experience.

Chart 6 (Part 2 Of 4)

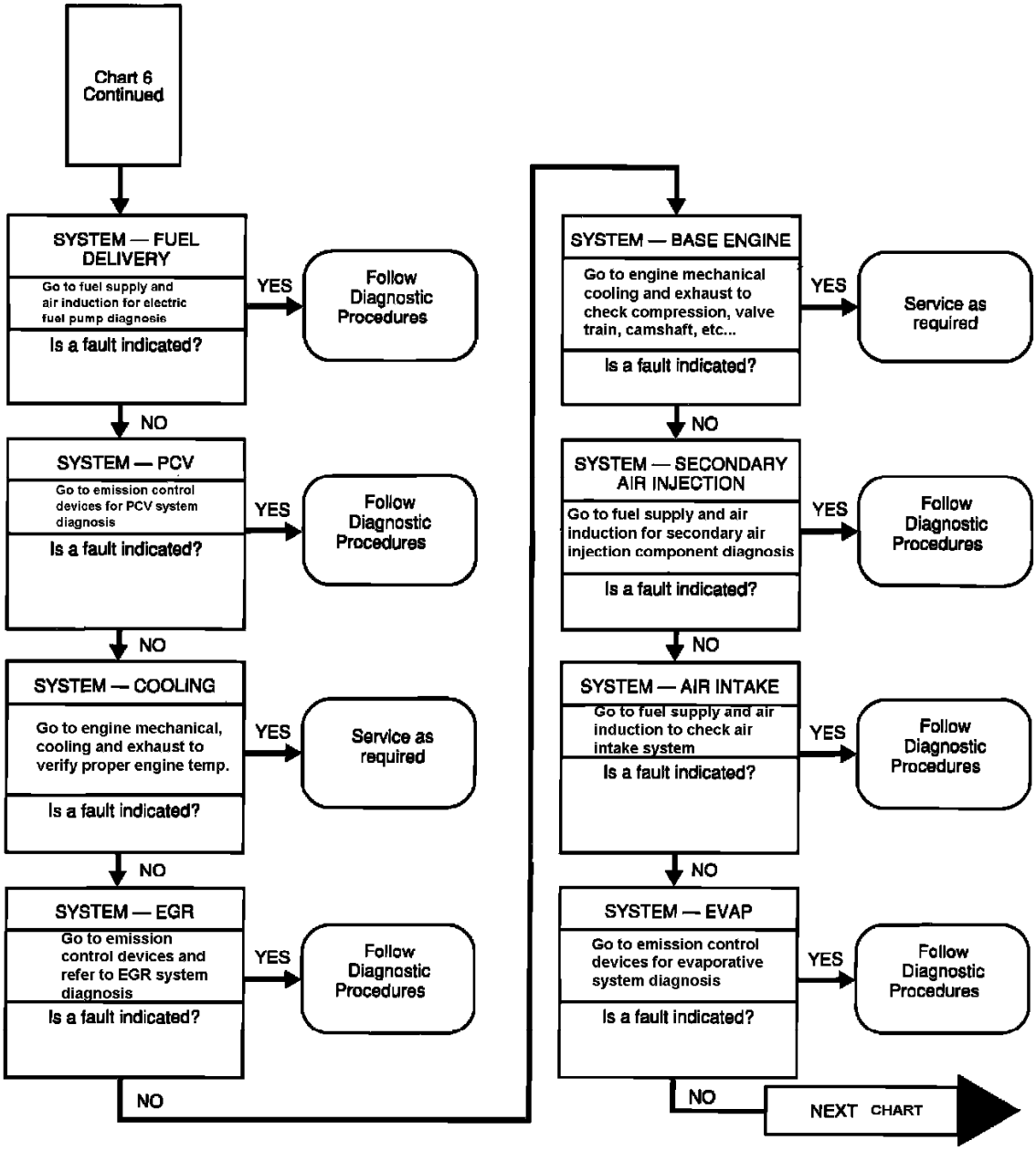

Diagnosis By Symptom Flow Chart

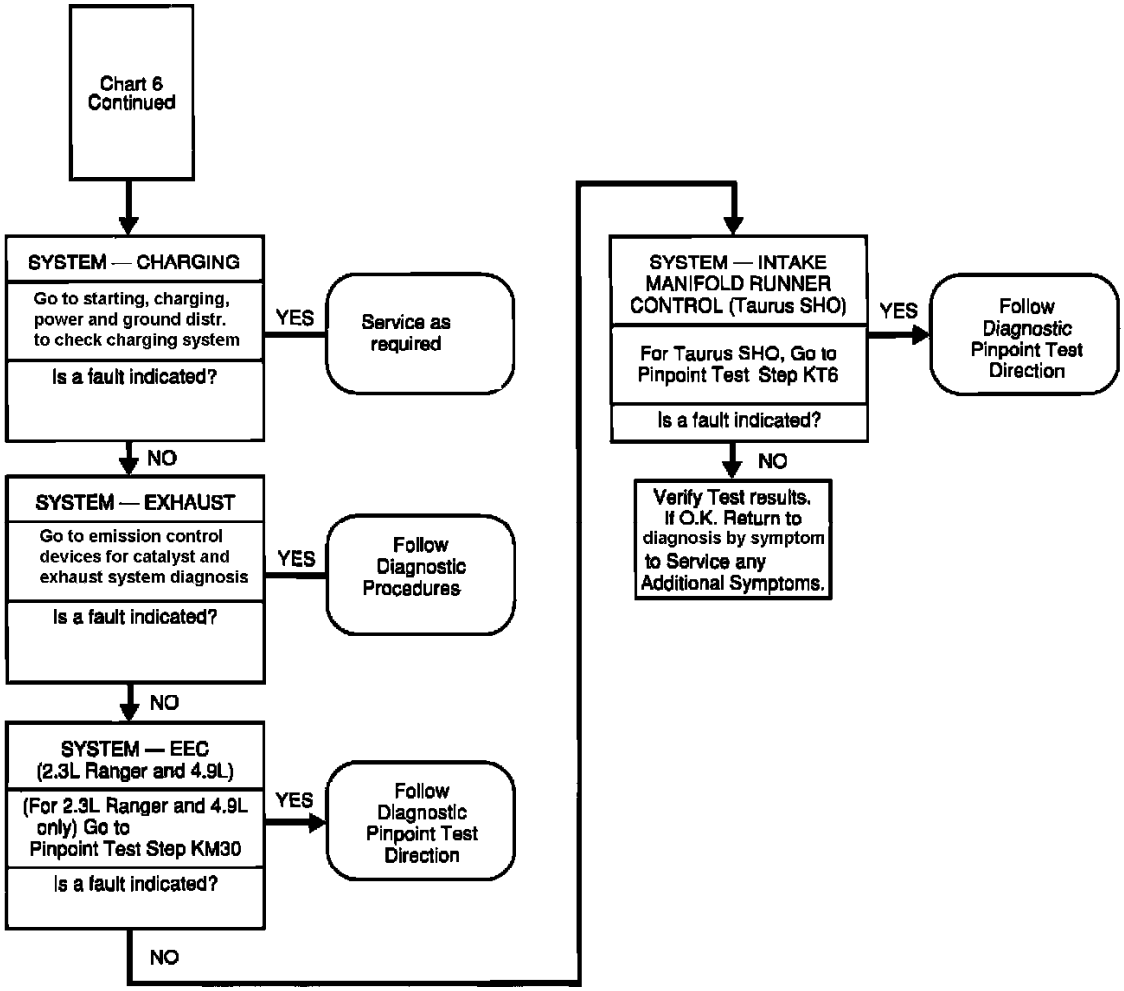

Diagnosis By Symptom Flow Chart

Symptom	OASIS Number
Unique Idle Concerns —Fast Idle	619400
Additional Driveability Concerns —Diesels/Runs On	621000

NOTE: **If the vehicle normally runs after the ignition key is turned off, check for faulty ignition switch, IGN RUN circuit short to power, etc. Refer to IGNITION SYSTEM**

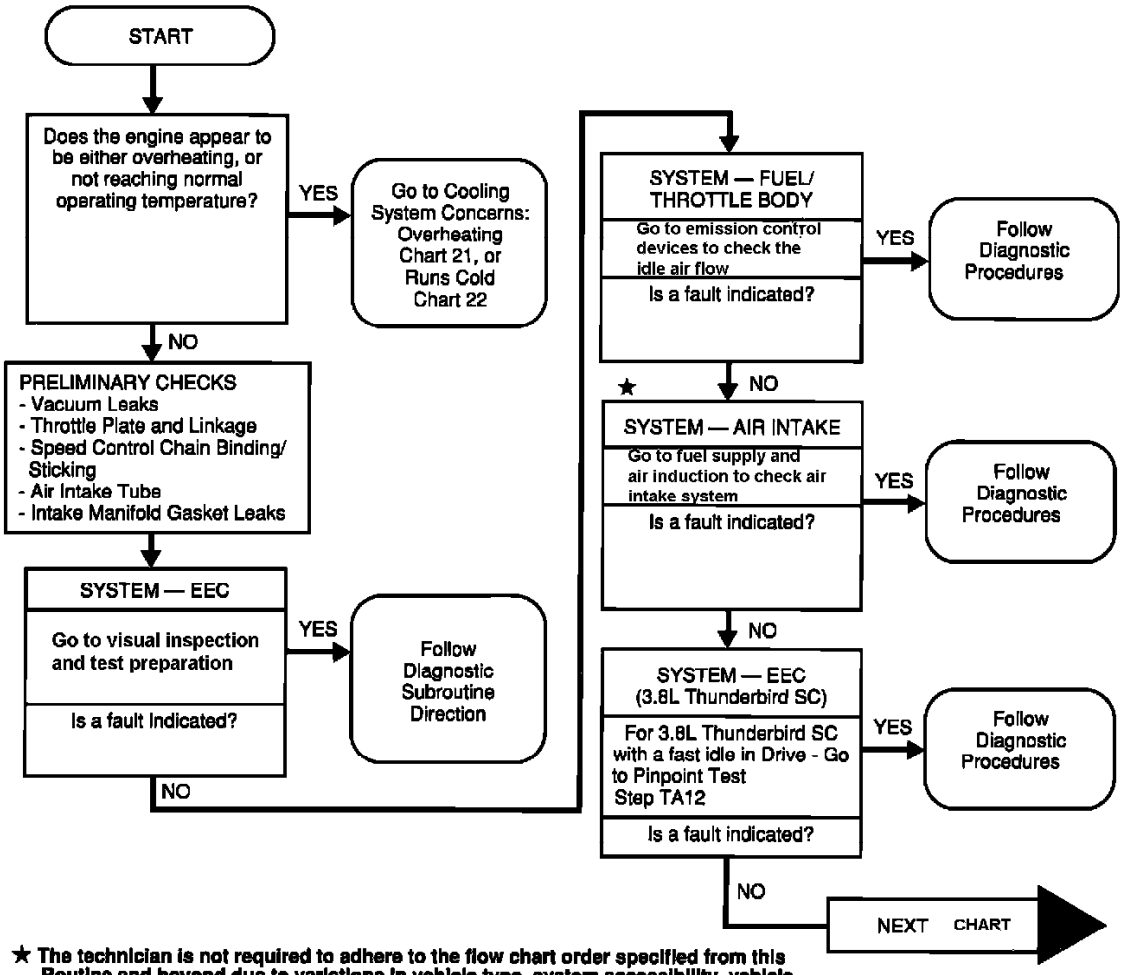

★ **The technician is not required to adhere to the flow chart order specified from this Routine and beyond due to variations in vehicle type, system accessibility, vehicle history or technician experience.**

Diagnosis By Symptom Flow Chart

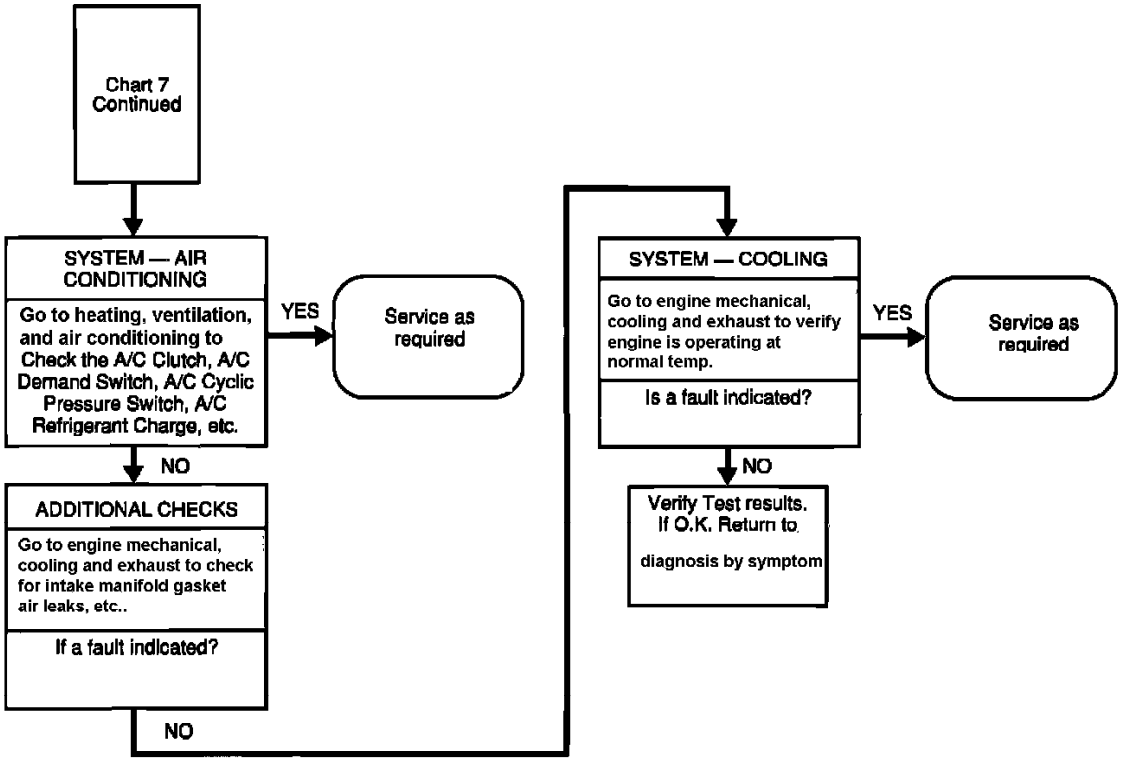

Diagnosis By Symptom Flow Chart

Symptom	OASIS Number
Unique Idle Concerns —Low Idle	
Stalls/Quits —Deceleration	607000 607700

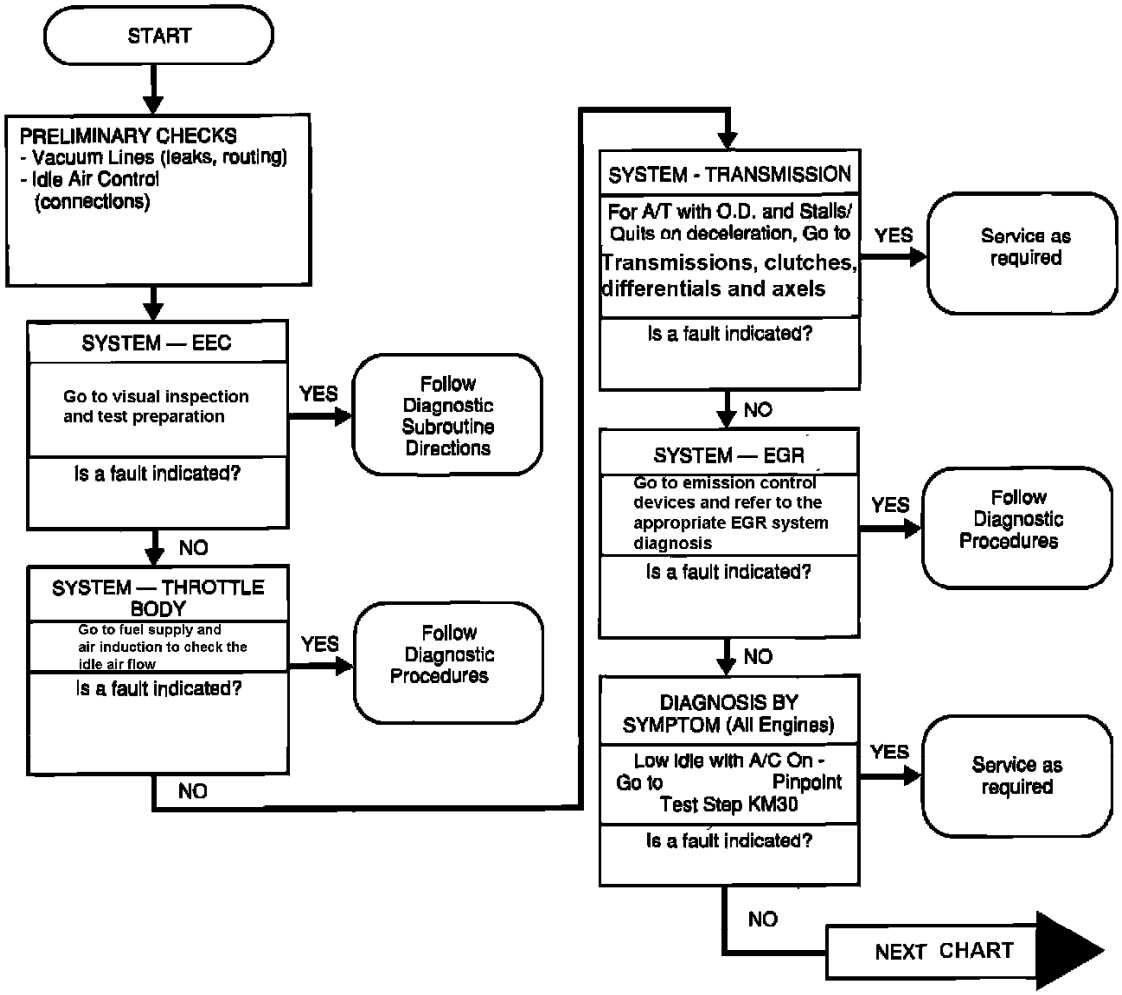

Diagnosis By Symptom Flow Chart

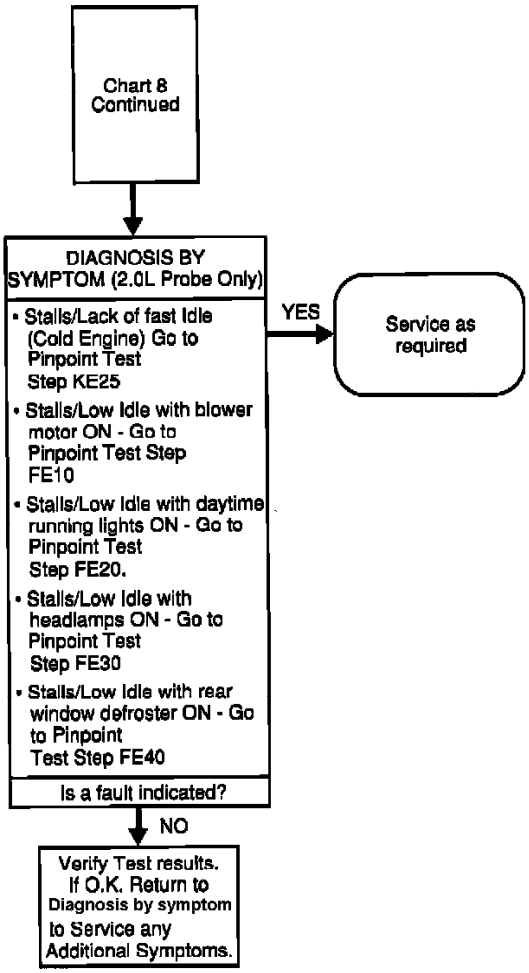

Diagnosis By Symptom Flow Chart

Symptom	OASIS Number
Stalls/Quits	607000
—Acceleration	607500
—Cruise	607600
Runs Rough	608000
—Acceleration	608500
—Cruise	608600
Misses	609000
—Acceleration	609500
—Cruise	609600
Buck/Jerk	610000
—Acceleration	610500
—Cruise	610600
—Deceleration	610700
Hesitation/Stumble	611000
—Acceleration	611500

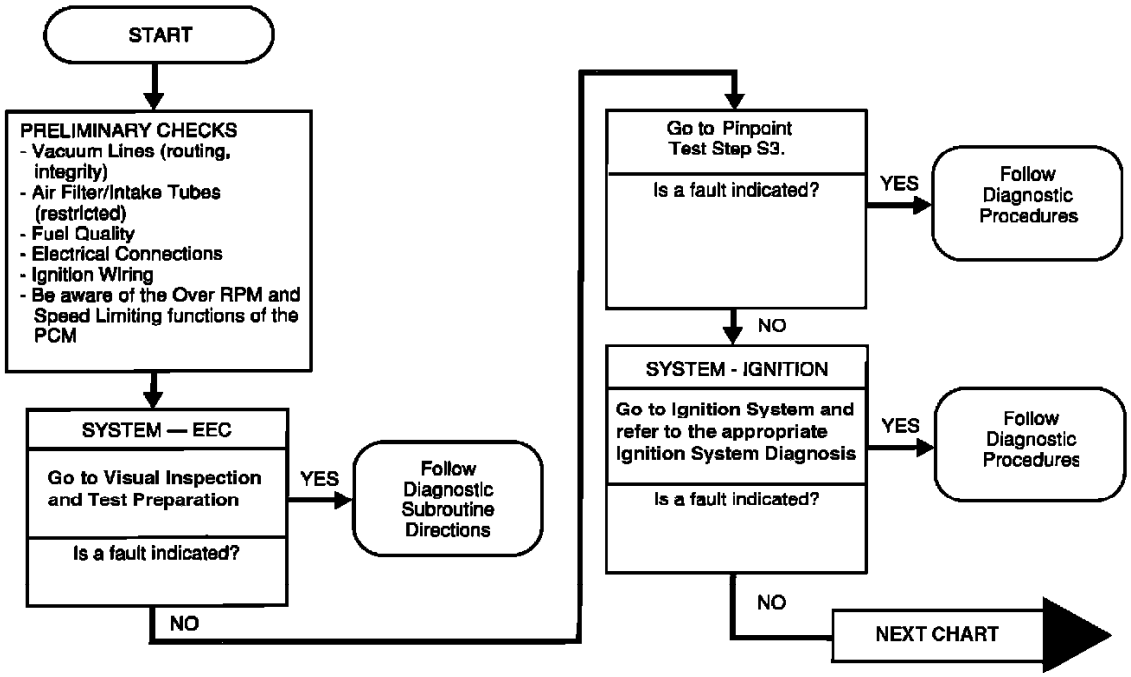

Chart 9 (Part 1 of 3)

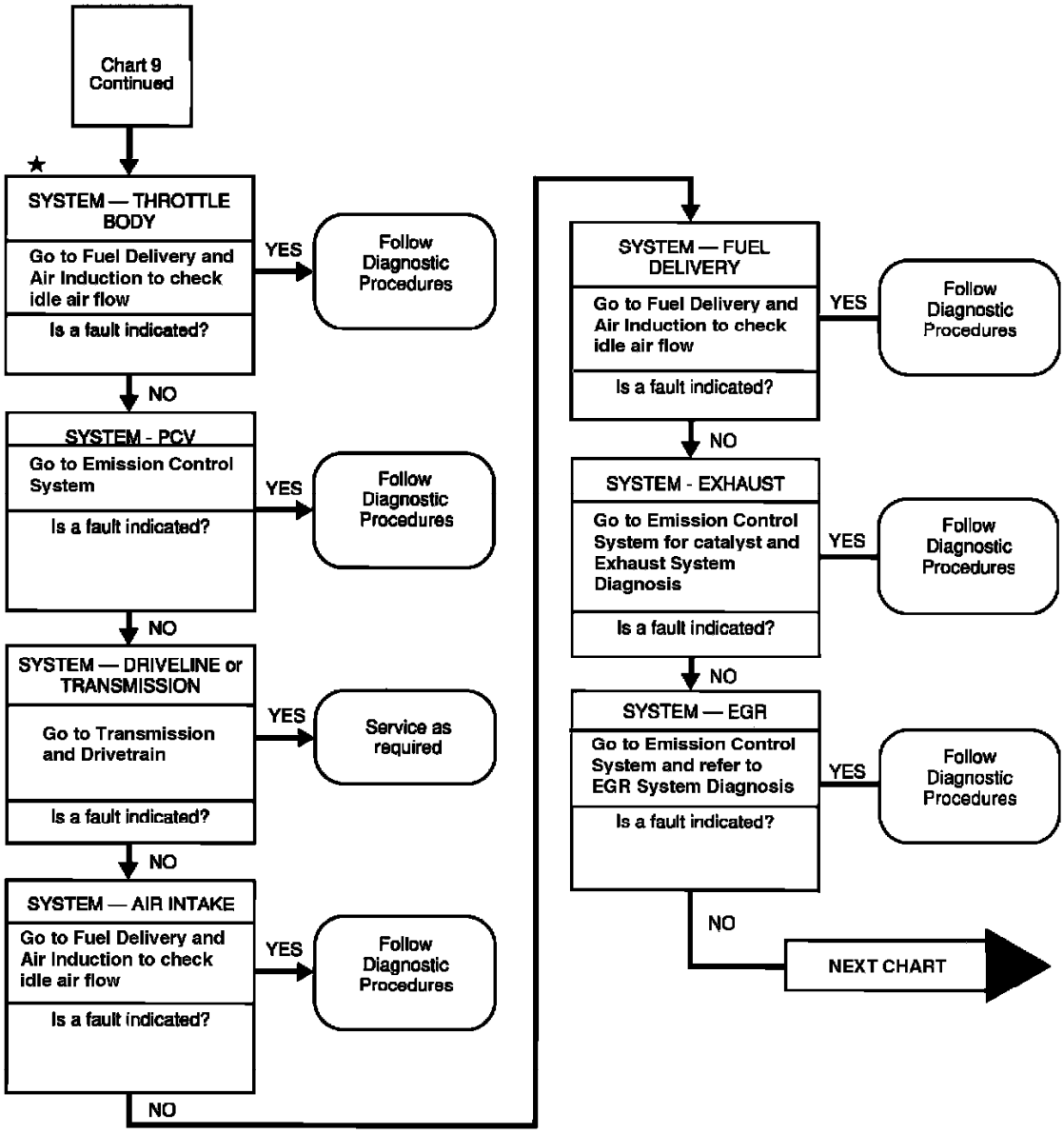

★ The technician is not required to adhere to the flow chart order specified from this Routine and beyond due to variations in vehicle type, system accessibility, vehicle history or technician experience.

Chart 9 (Part 2 of 3)

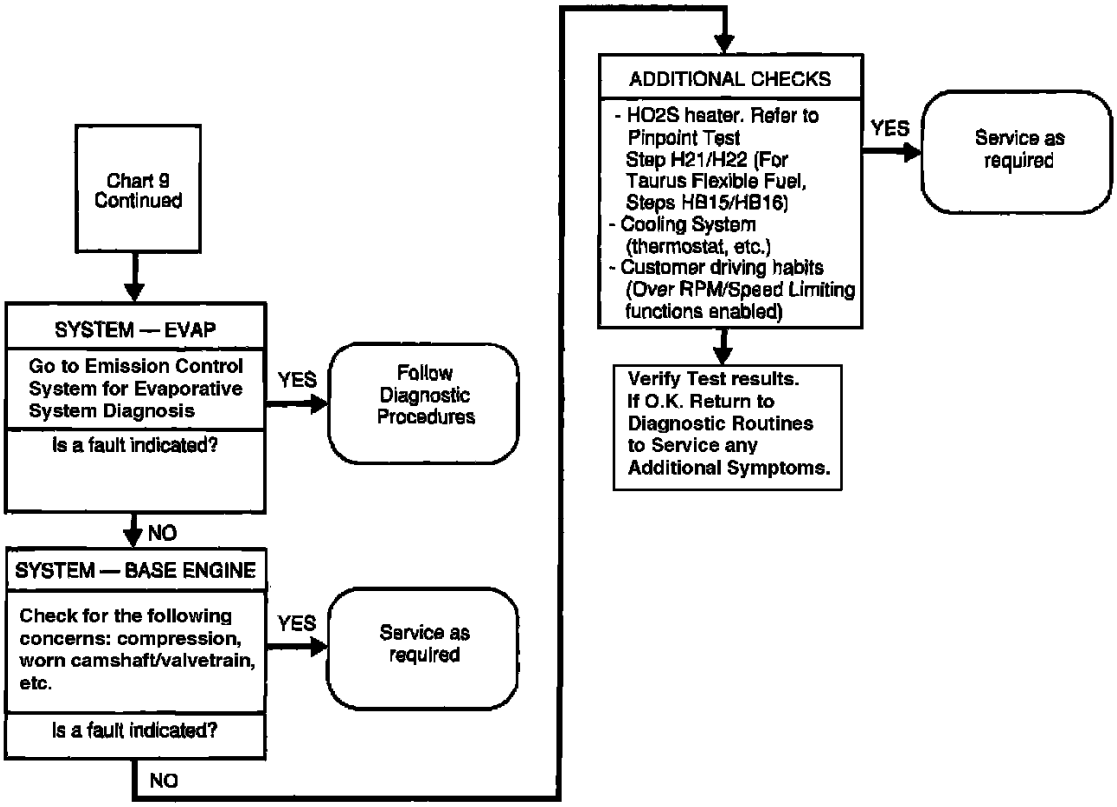

Chart 9 (Part 3 of 3)

Symptom	OASIS Number
Stalls/Quits	607000
—Acceleration	607500
—Cruise	607600
Runs Rough	608000
—Acceleration	608500
—Cruise	608600
Misses	609000
—Acceleration	609500
—Cruise	609600
Buck/Jerk	610000
—Acceleration	610500
—Cruise	610600
—Deceleration	610700
Hesitation/Stumble	611000
—Acceleration	611500

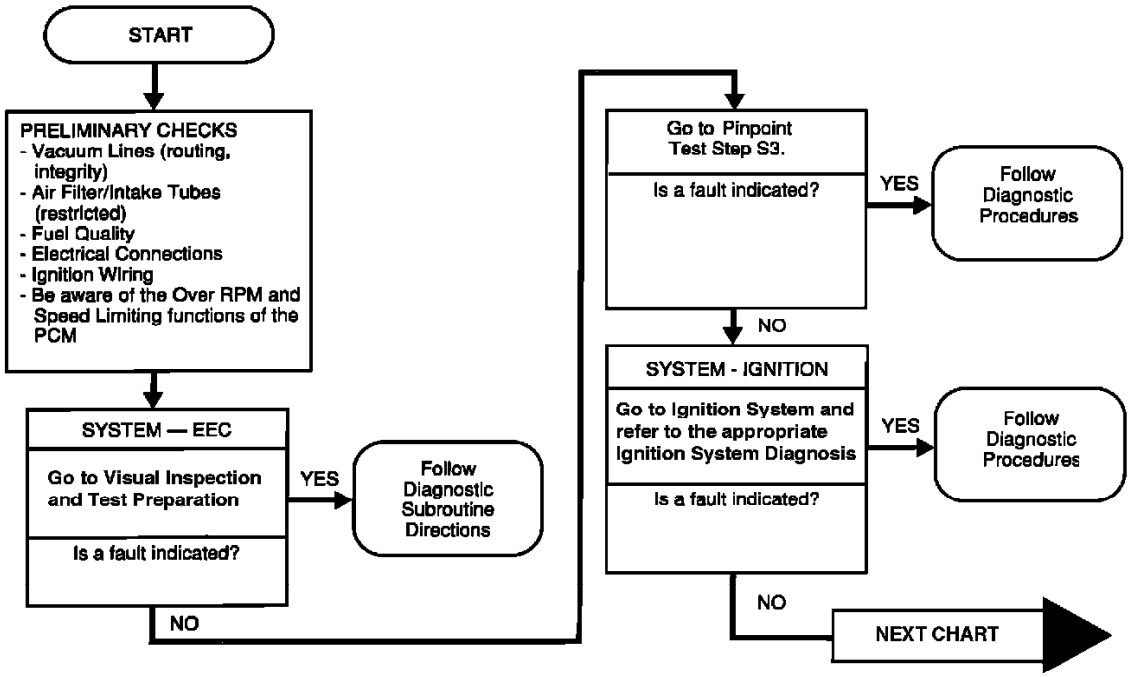

Chart 9 (Part 1 of 3)

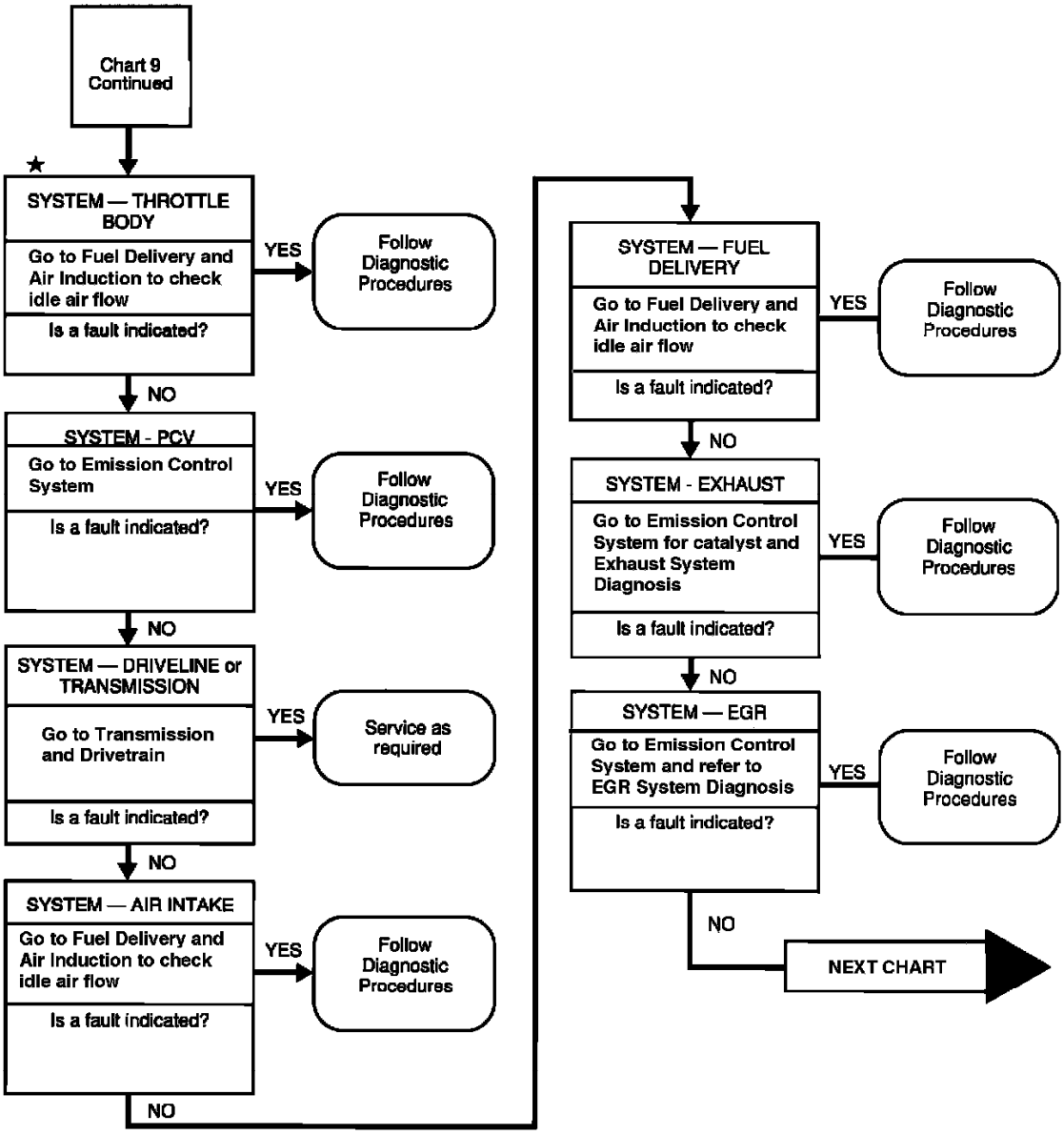

★ The technician is not required to adhere to the flow chart order specified from this Routine and beyond due to variations in vehicle type, system accessibility, vehicle history or technician experience.

Chart 9 (Part 2 of 3)

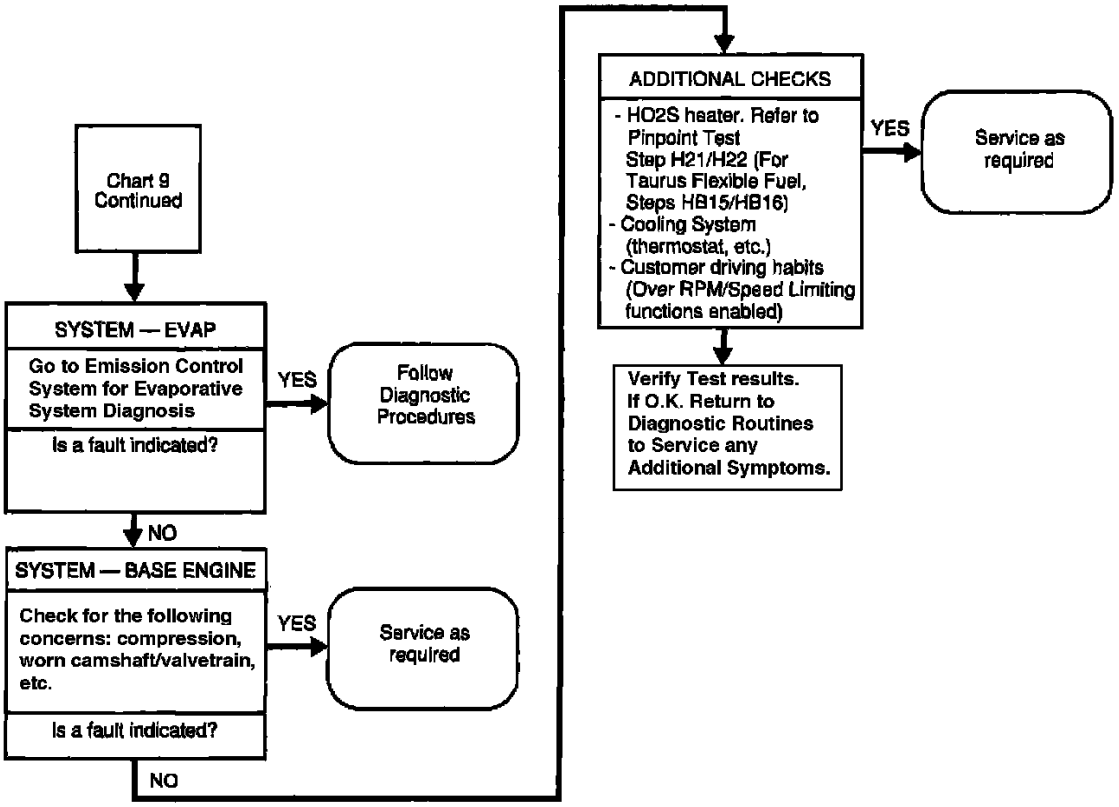

Chart 9 (Part 3 of 3)

Symptom	OASIS Number
Stalls/Quits	607000
—Acceleration	607500
—Cruise	607600
Runs Rough	608000
—Acceleration	608500
—Cruise	608600
Misses	609000
—Acceleration	609500
—Cruise	609600
Buck/Jerk	610000
—Acceleration	610500
—Cruise	610600
—Deceleration	610700
Hesitation/Stumble	611000
—Acceleration	611500

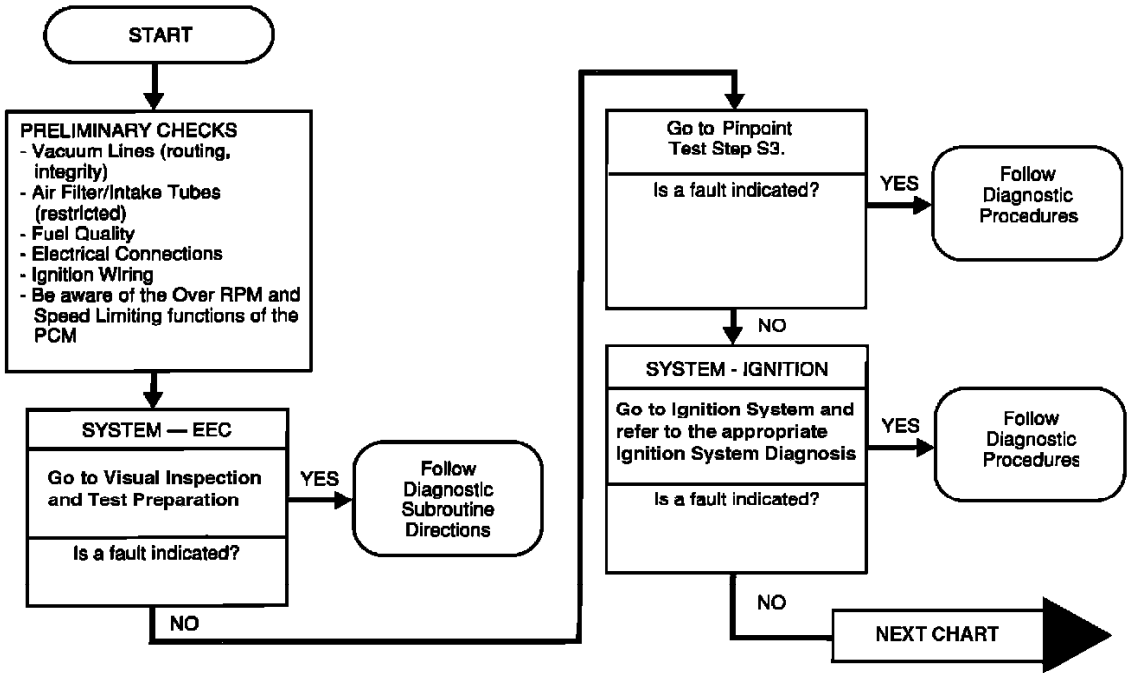

Chart 9 (Part 1 of 3)

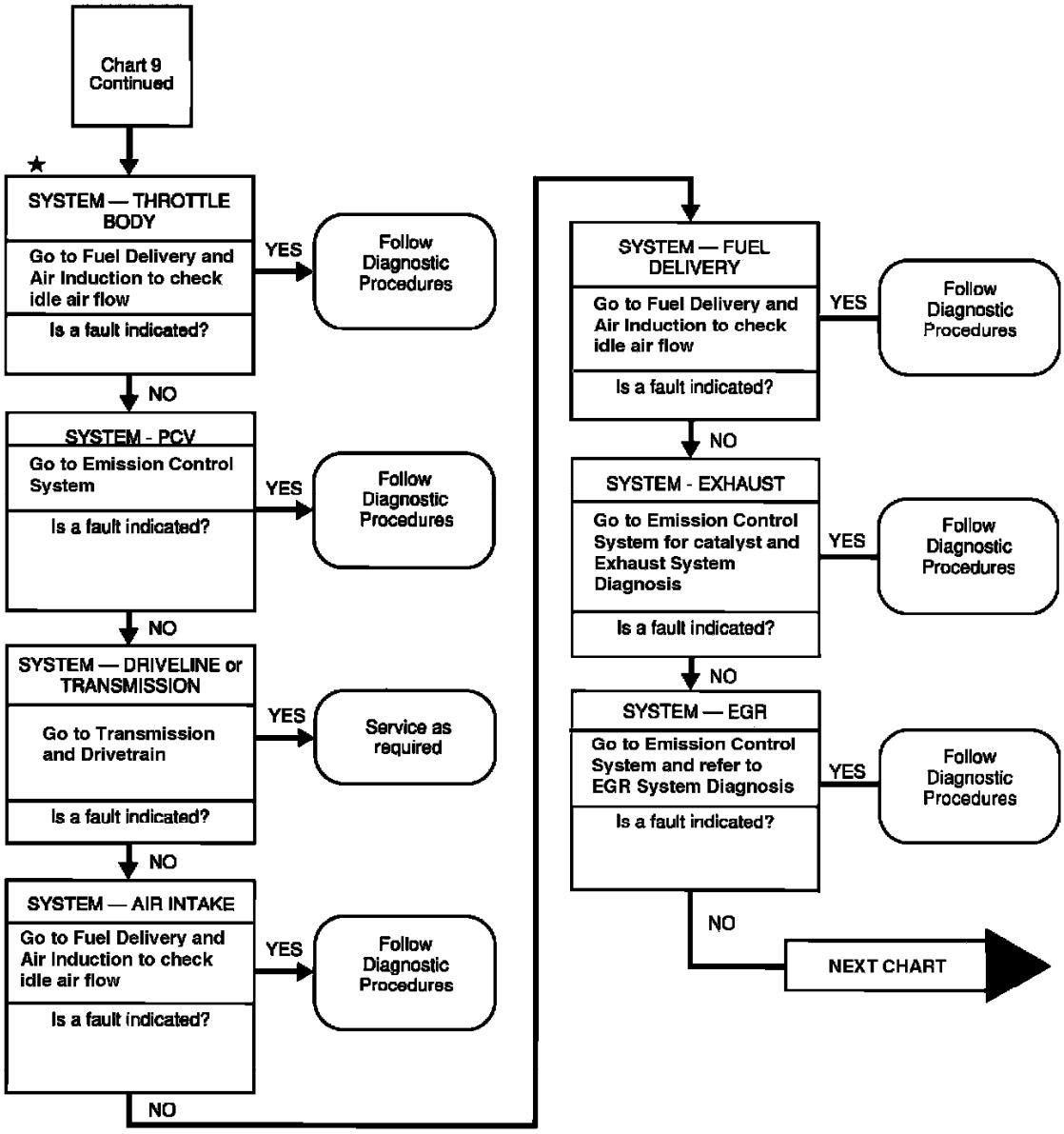

★ The technician is not required to adhere to the flow chart order specified from this Routine and beyond due to variations in vehicle type, system accessibility, vehicle history or technician experience.

Chart 9 (Part 2 of 3)

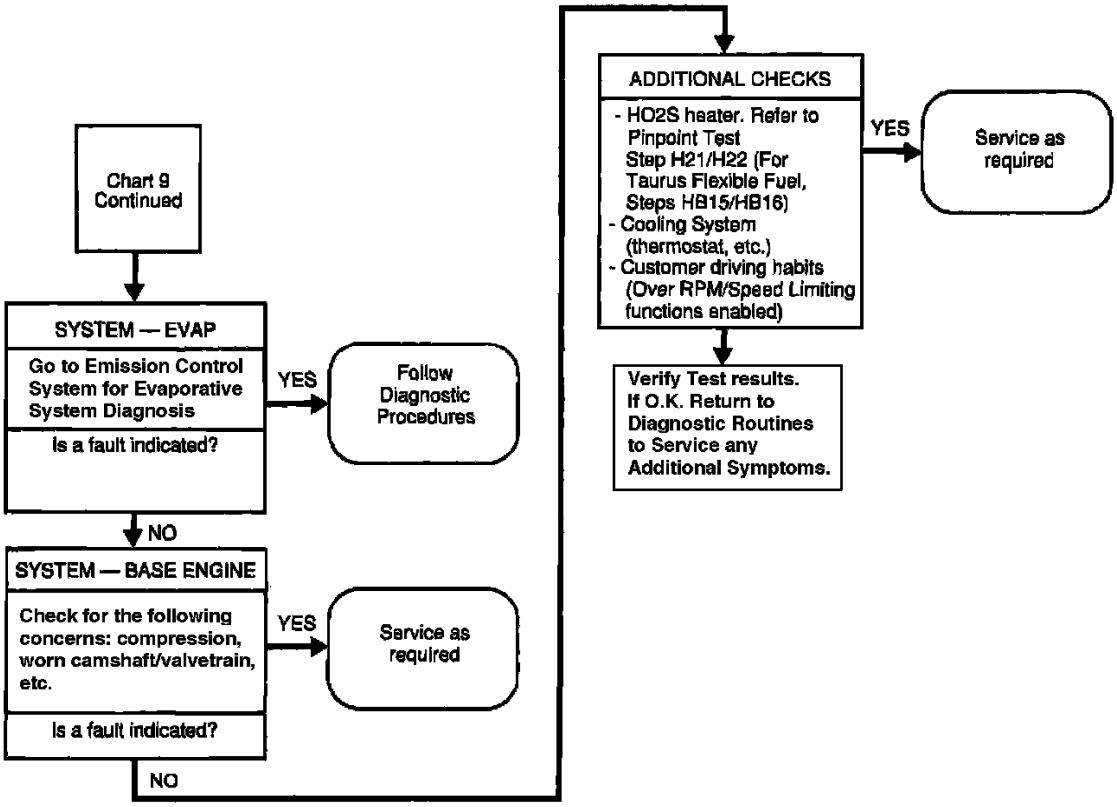

Chart 9 (Part 3 of 3)

Symptom	OASIS Number
Surge	612000
—Acceleration	612500
—Cruise	612600

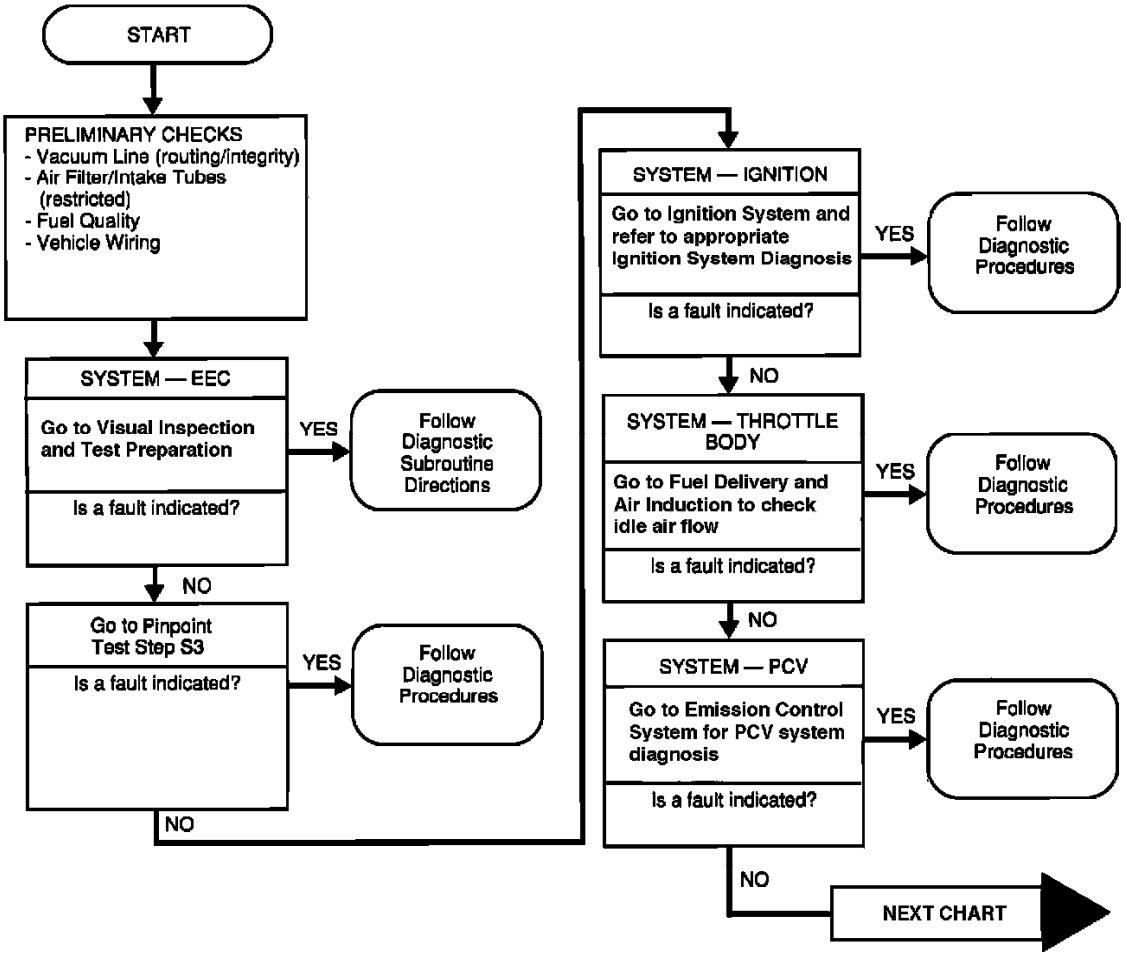

Chart 11 (Part 1 of 3)

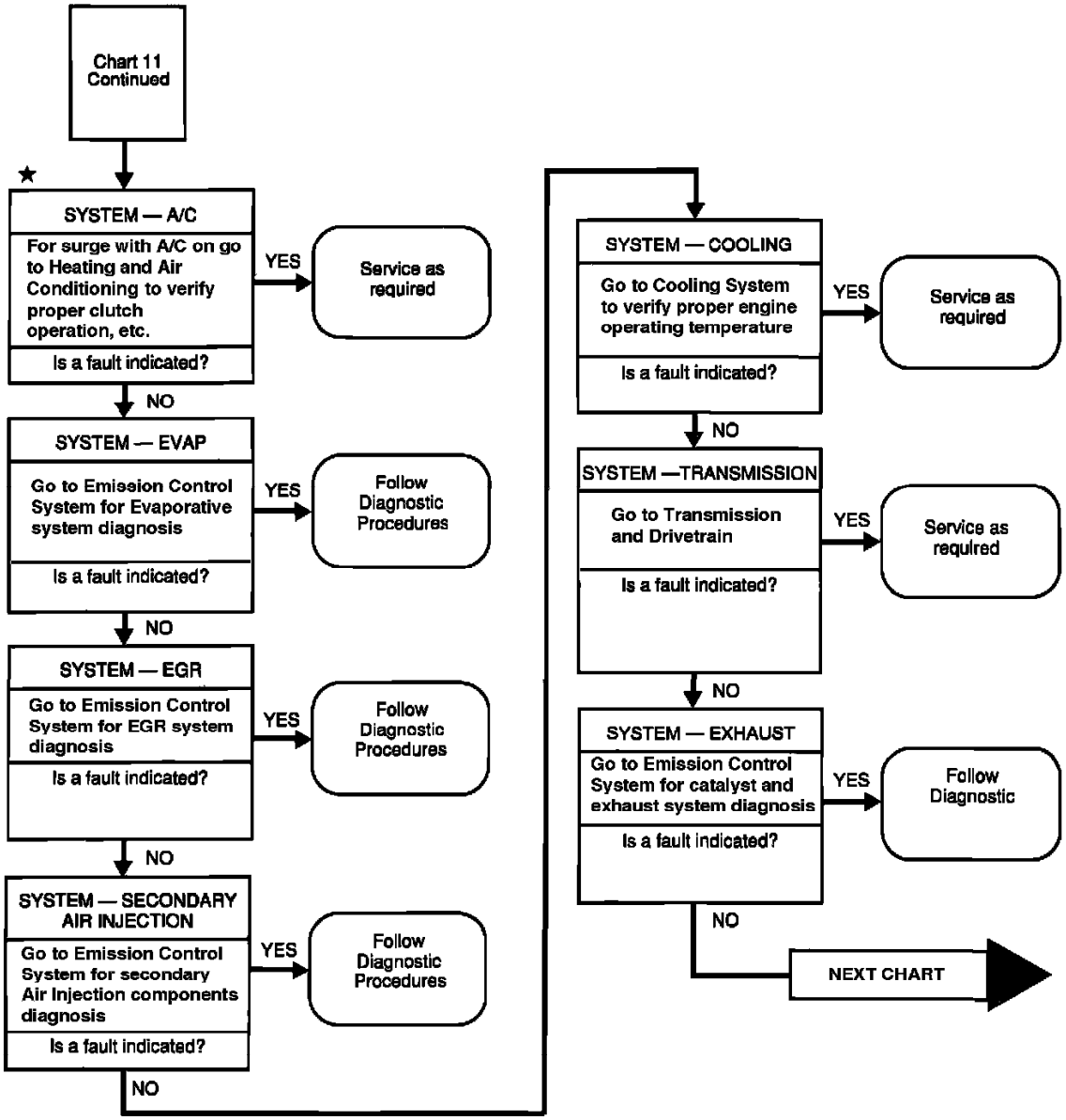

★ The technician is not required to adhere to the flow chart order specified from this Routine and beyond due to variations in vehicle type, system accessibility, vehicle history or technician experience.

Chart 11 (Part 2 of 3)

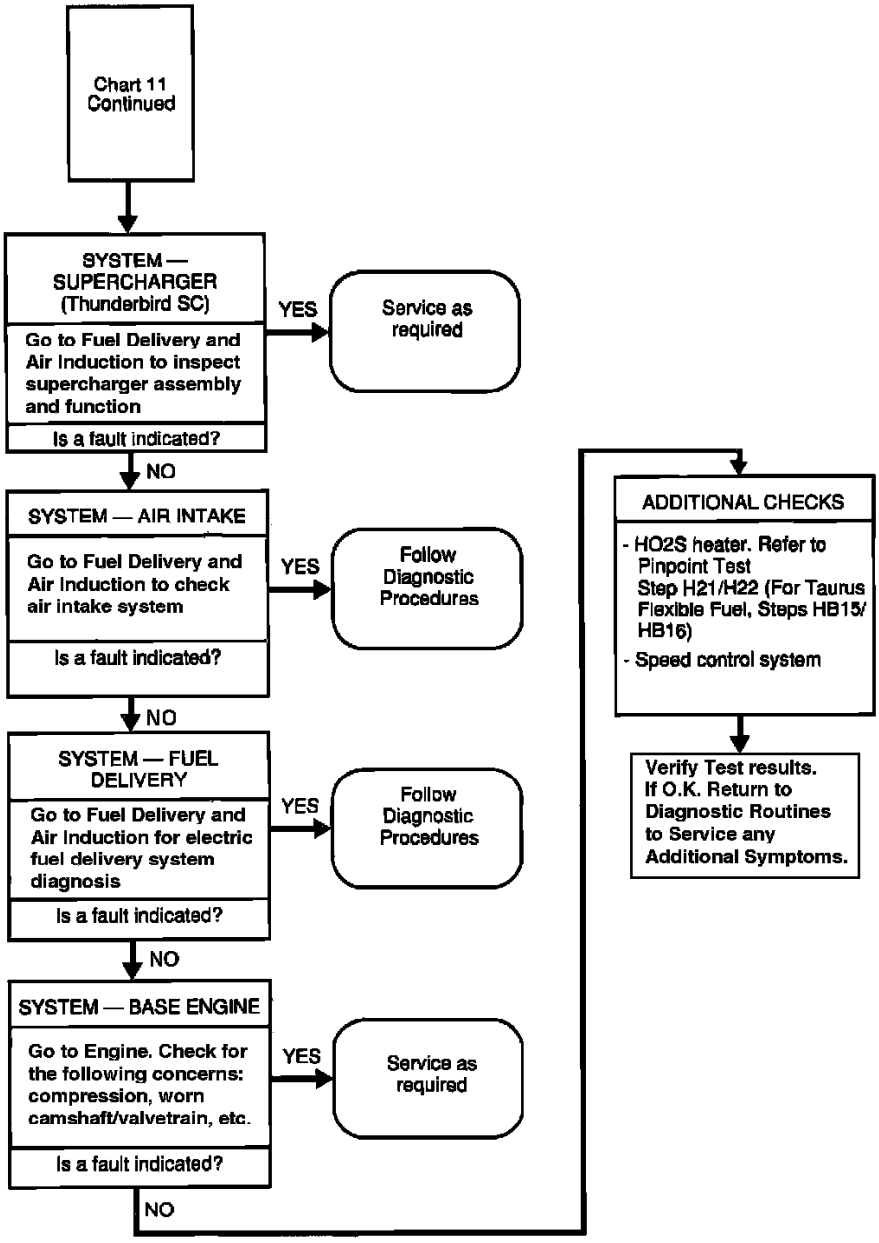

Chart 11 (Part 3 of 3)

Symptom	OASIS Number
Backfires	613000
—Idle	613400
—Acceleration	613500
—Deceleration	613600

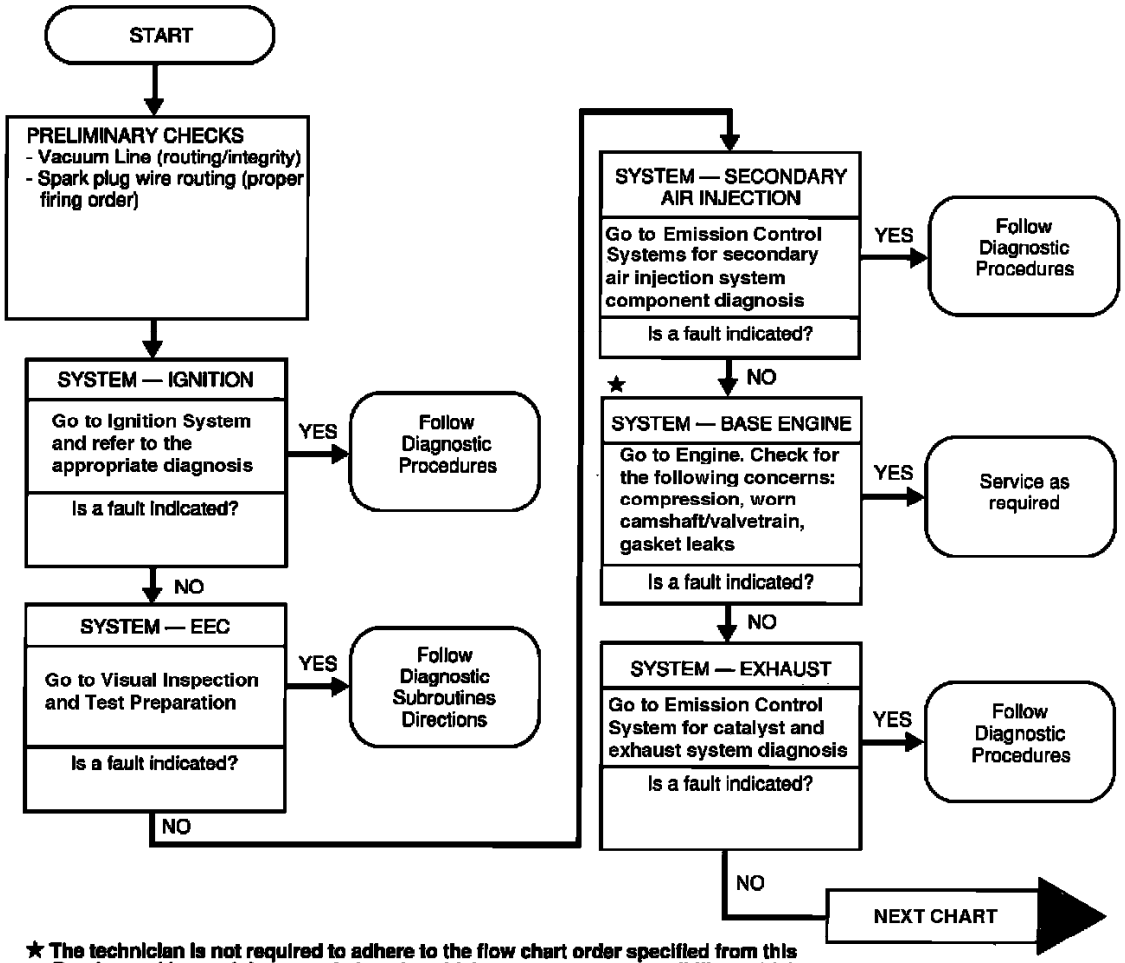

★ The technician is not required to adhere to the flow chart order specified from this Routine and beyond due to variations in vehicle type, system accessibility, vehicle history or technician experience.

Chart 12 (Part 1 of 2)

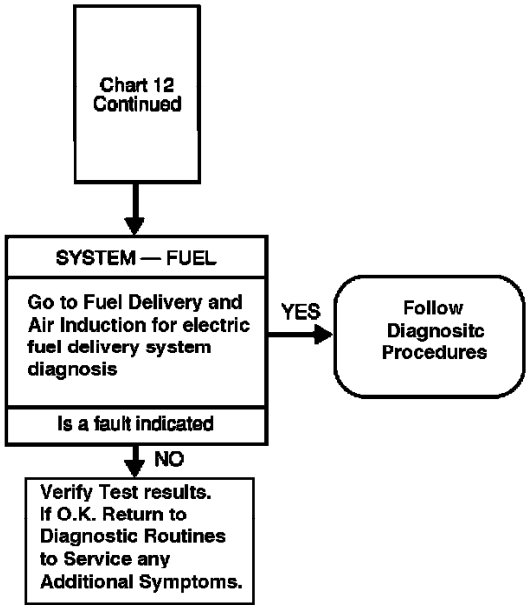

Chart 12 (Part 2 of 2)

Symptom	OASIS Number
Lack/Loss of Power	614000
—Acceleration	614500
—Cruise	614600

NOTE: **Verify symptom is reported under normal driving conditions without engine/vehicle excessive load conditions.**

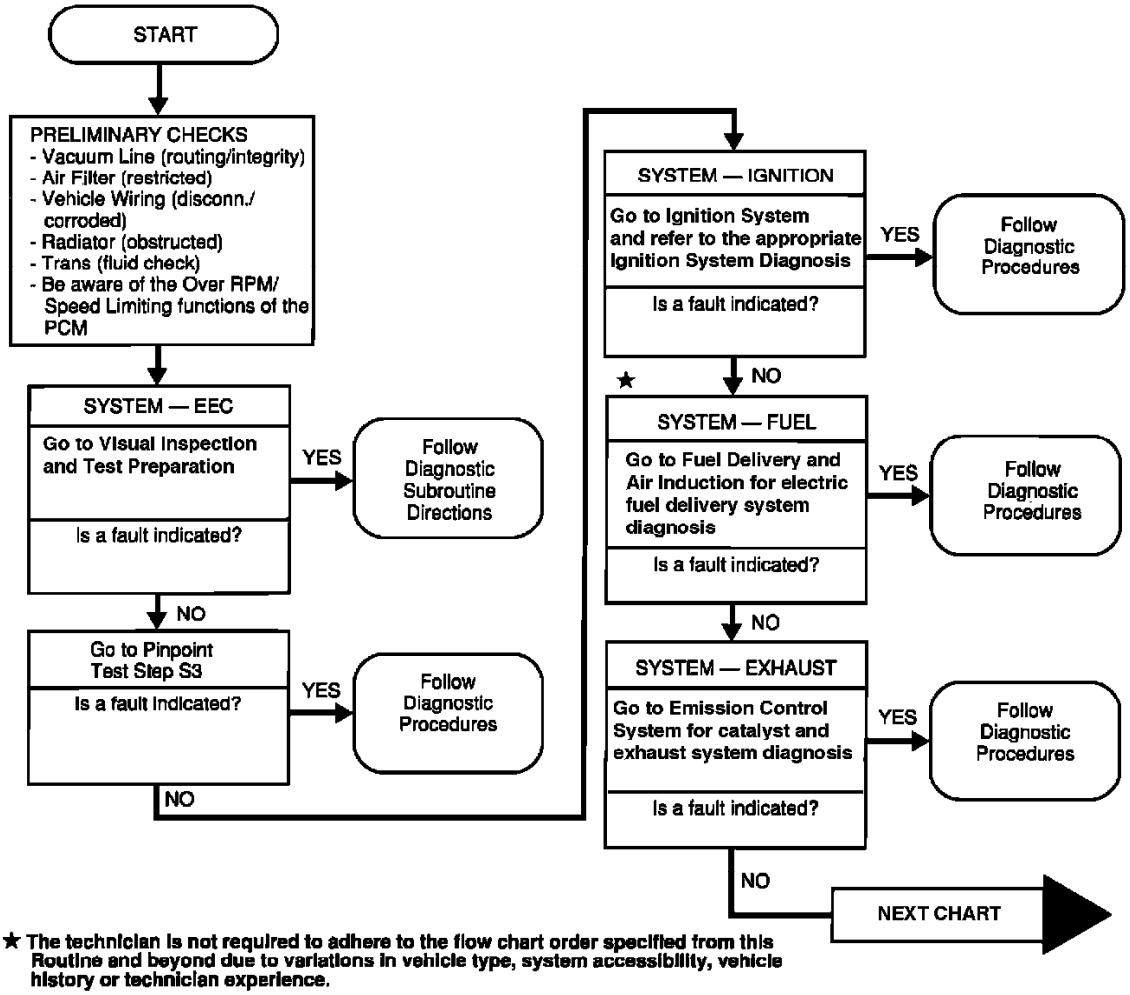

★ **The technician is not required to adhere to the flow chart order specified from this Routine and beyond due to variations in vehicle type, system accessibility, vehicle history or technician experience.**

Chart 13 (Part 1 of 3)

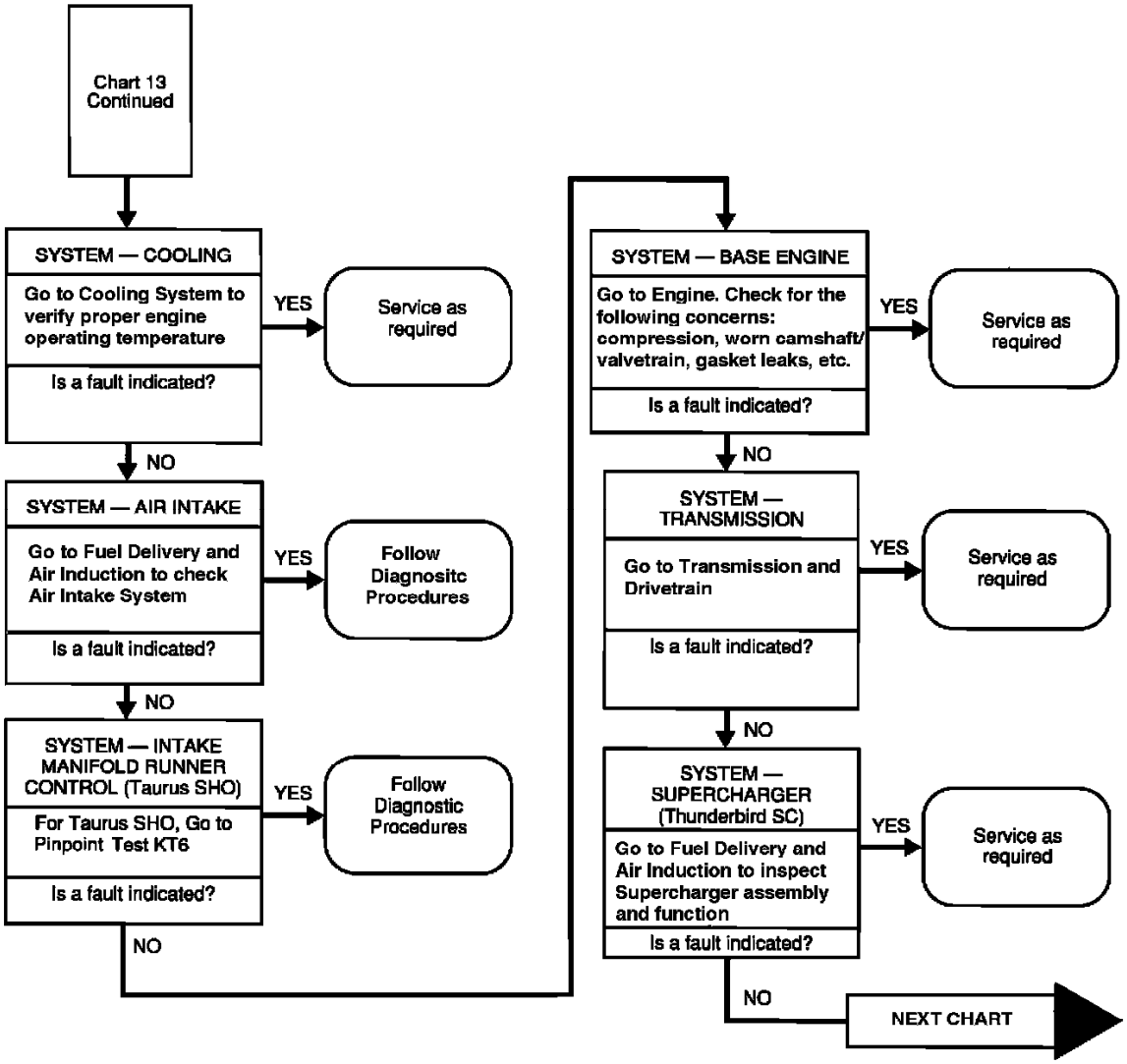

Chart 13 (Part 2 of 3)

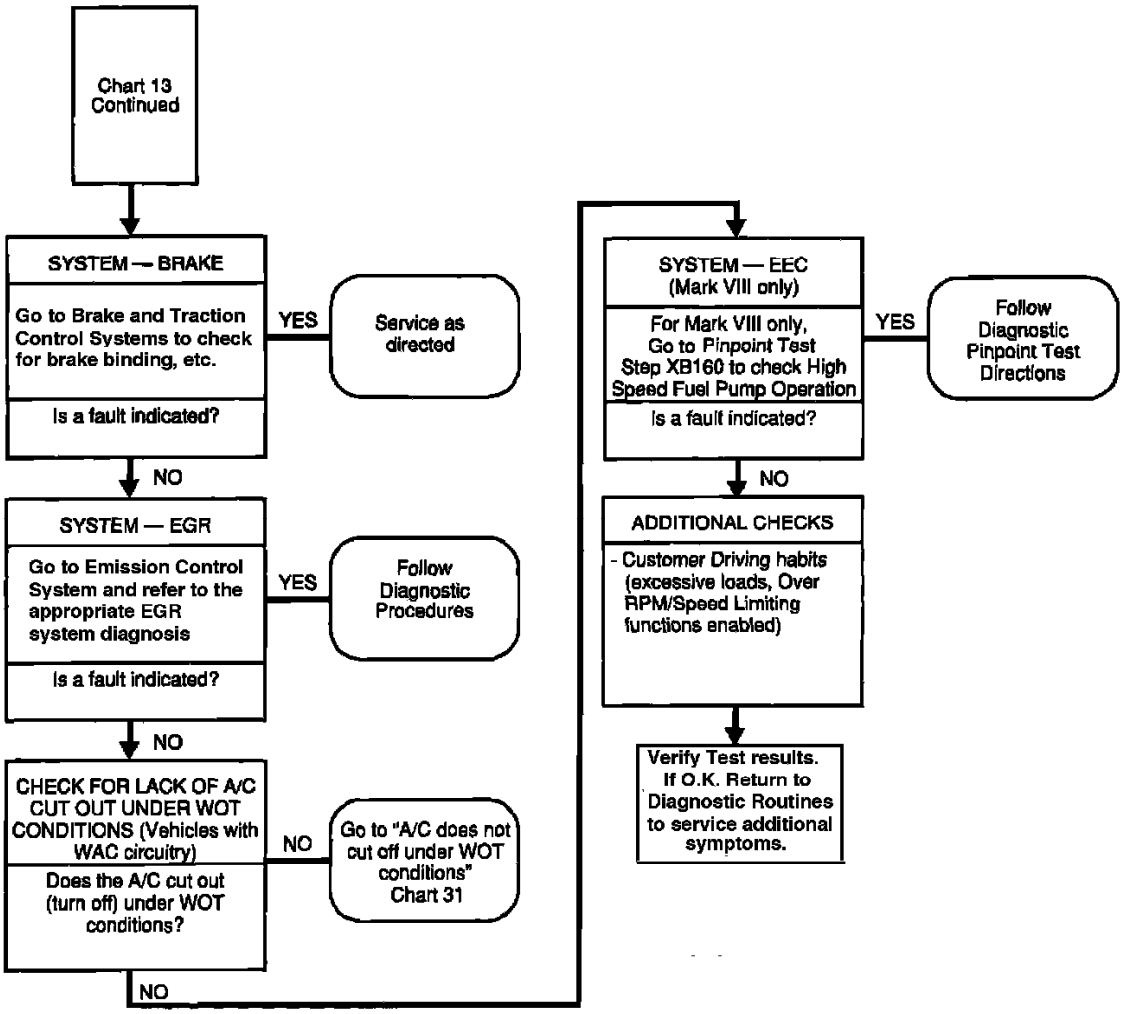

Chart 13 (Part 3 of 3)

Symptom	OASIS Number
Spark Knock	615000
—Acceleration	615500
—Cruise	615600

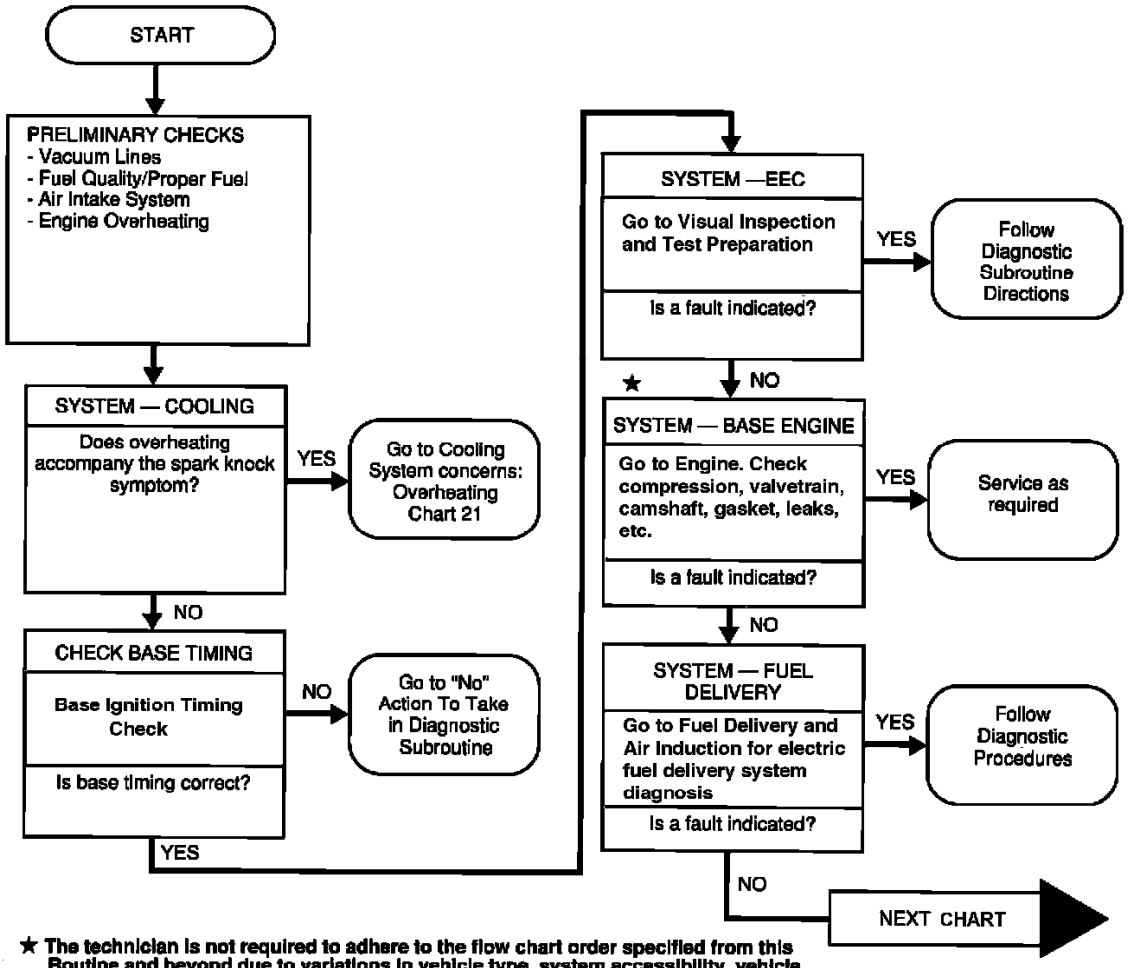

★ The technician is not required to adhere to the flow chart order specified from this Routine and beyond due to variations in vehicle type, system accessibility, vehicle history or technician experience.

Chart 14 (Part 1 of 2)

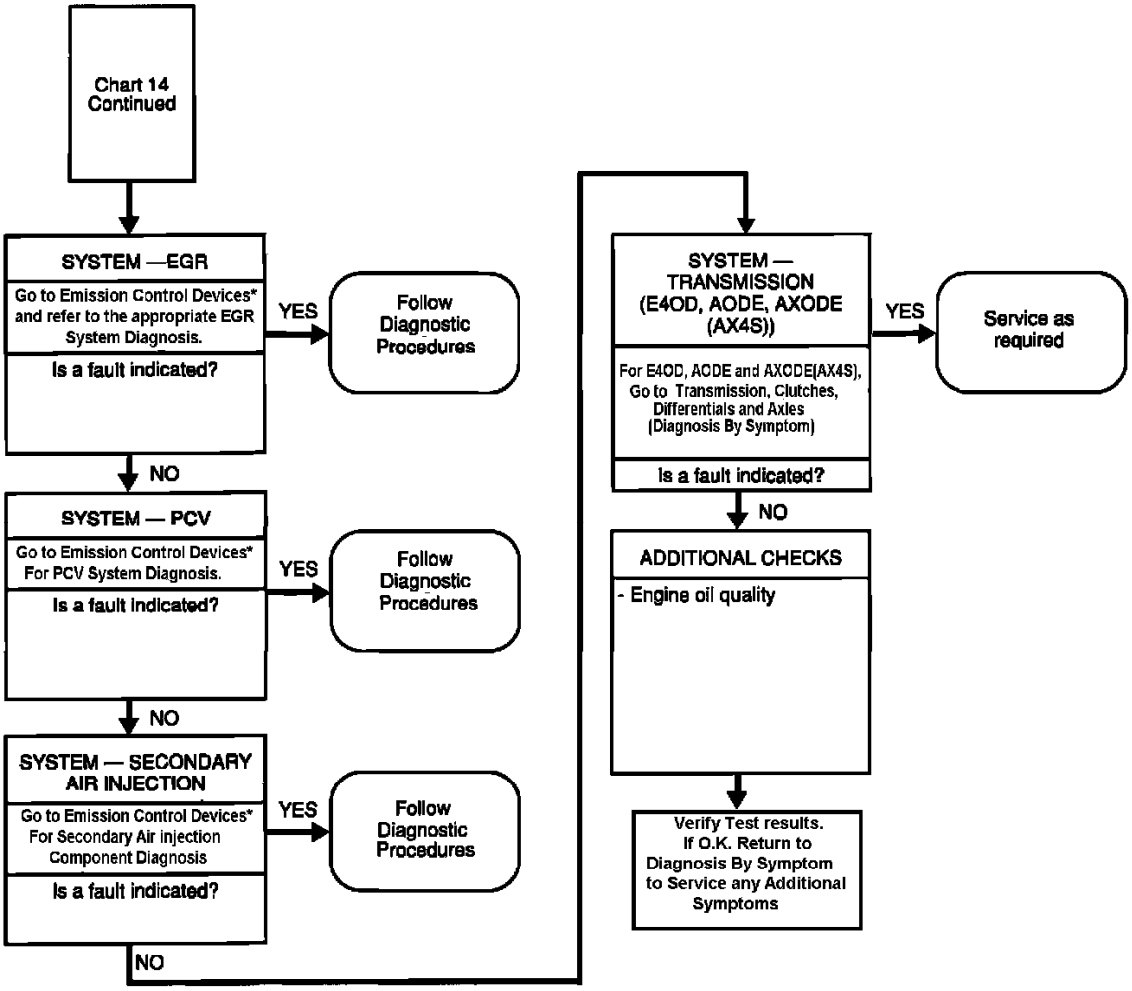

Diagnosis By Symptom Flow Chart

Symptom	OASIS Number
Poor Fuel Economy	622000

NOTE: **Since driving habits can have a significant influence on fuel economy, it is desirable to first verify the concern before starting an in-depth diagnosis. Also, be aware of the following external factors that could contribute to "poor fuel economy" conditions:**

- Stop / Go City Driving
- Tire Pressure / Size
- Vehicle Loads (Trailer Towing, etc.)
- Extended Winter Warm-up Conditions
- High Speed Driving
- Axle Ratio
- Speedometer Gear Ratio
- Road / Weather Conditions
- After Market Add-ons
- Short-Run Operations
- Customer Expectations / Driving Habits

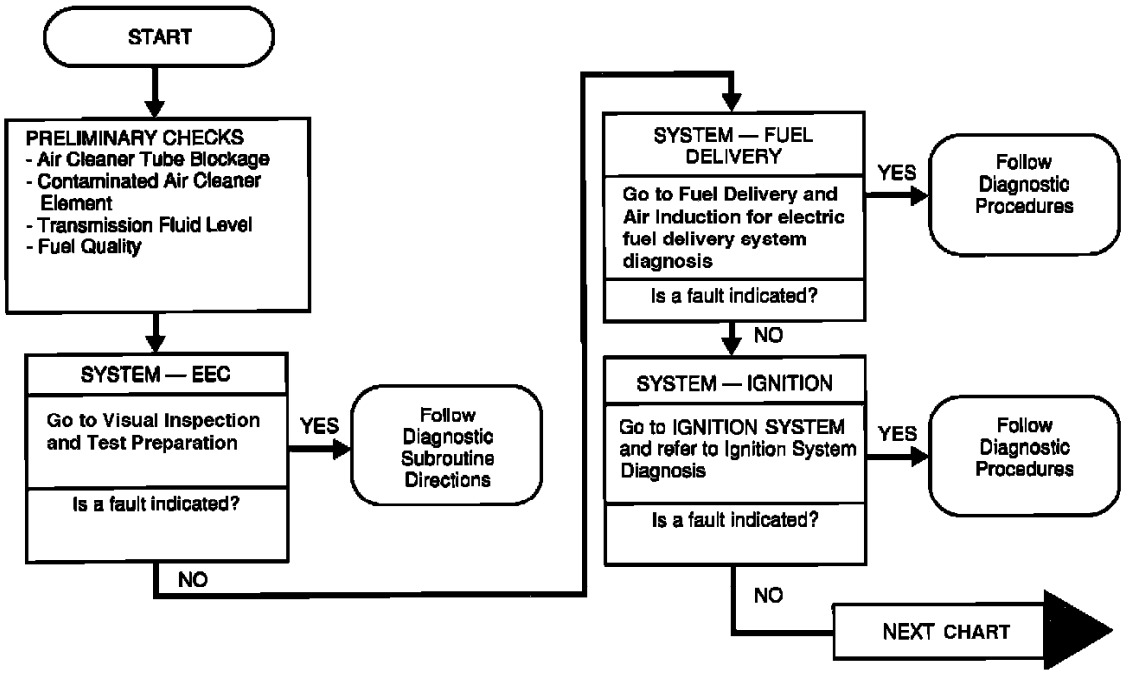

Chart 15 (Part 1 of 3)

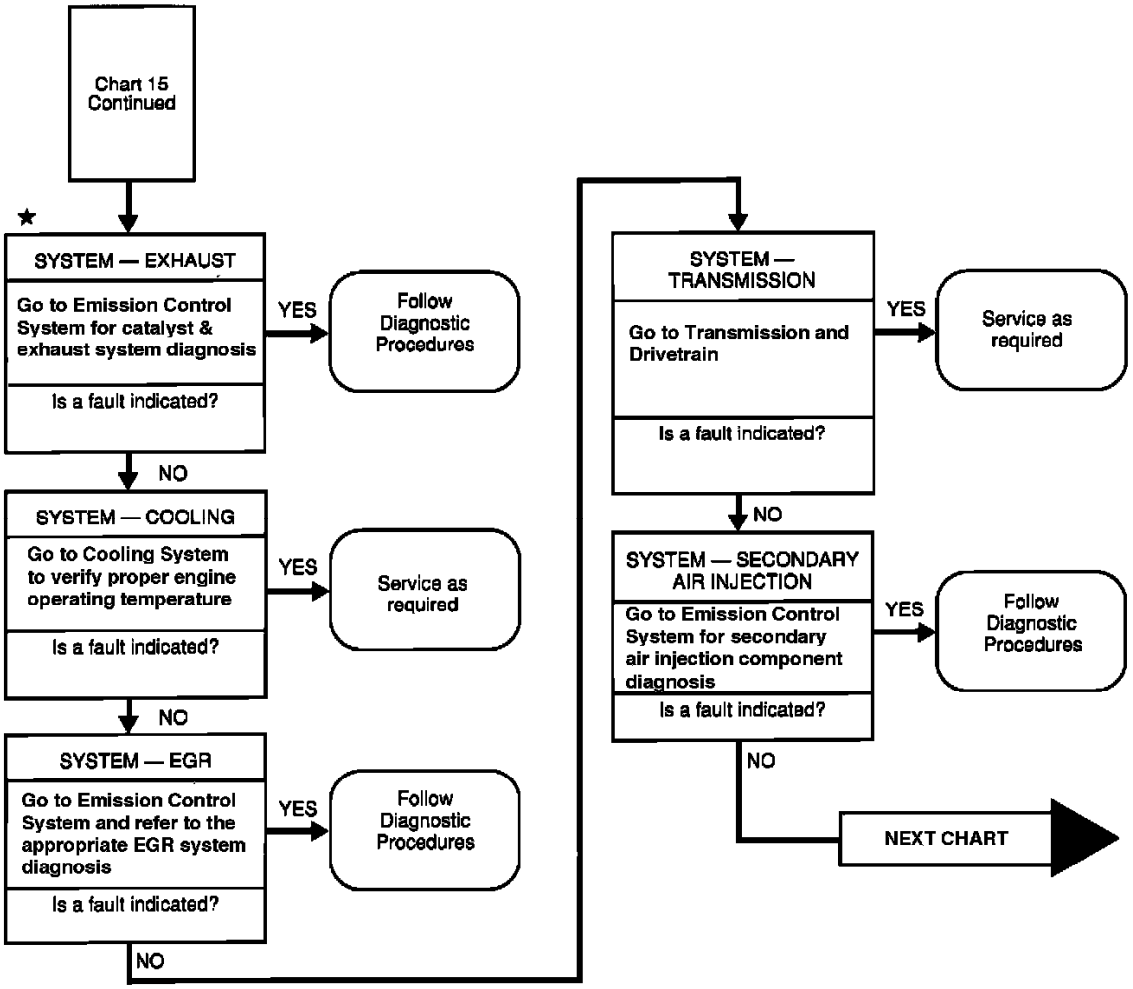

★ The technician is not required to adhere to the flow chart order specified from this Routine and beyond due to variations in vehicle type, system accessibility, vehicle history or technician experience.

Chart 15 (Part 2 of 3)

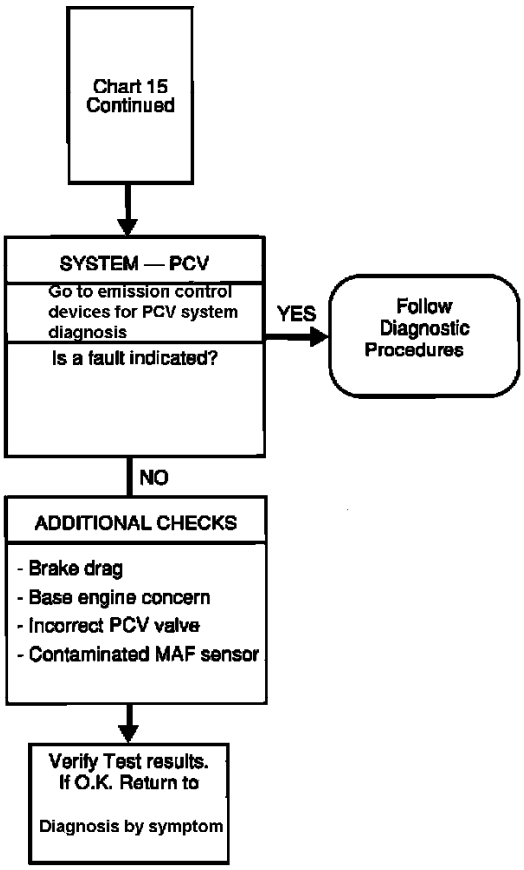

Diagnosis By Symptom Flow Chart

Symptom	OASIS Number
Emissions Compliance	623000

NOTE: **Canada and some states or metropolitan areas in the United States require periodic Idle Emission Tests. All Ford products have been designed to pass these tests. If a Ford product fails an Idle Emission Test, it is probable that, 1) The engine temperature was not warm and stabilized prior to the test. 2) The vehicle had idled excessively long prior to the test.**

Prior to starting any service, complaints of Idle Emission Test failure should be verified.

The following example encompasses most of the emissions measurement modes of the current state inspection / maintenance test procedures:

1. Ensure that the engine is at normal operating temperature and that all accessories are turned off.
2. Read emissions at idle.
3. Run engine at 2500 ± 300 rpm.
4. Read emissions within 30 seconds.
5. Return engine speed to idle.
6. Read emissions within 30 seconds.

If any emission components are replaced, perform the following before repeating the State Emission Test procedure:

1. Clear Keep Alive Memory (KAM)—Refer to clearing Keep Alive Memory (KAM)
2. To re-learn appropriate Adaptive Learning, run engine at 2500 rpm for one minute and idle engine for two minutes.

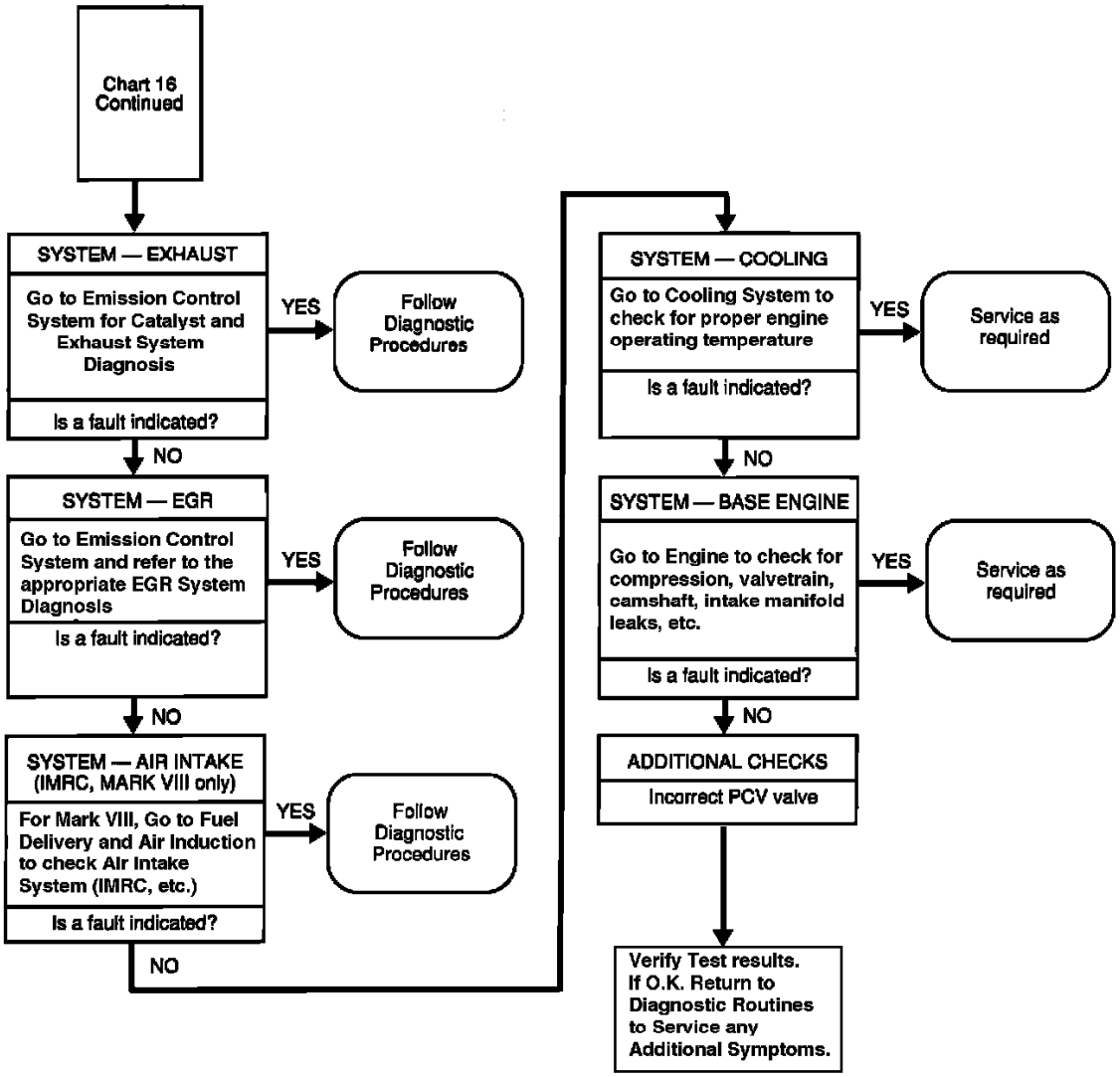

Chart 16 (Part 3 of 3)

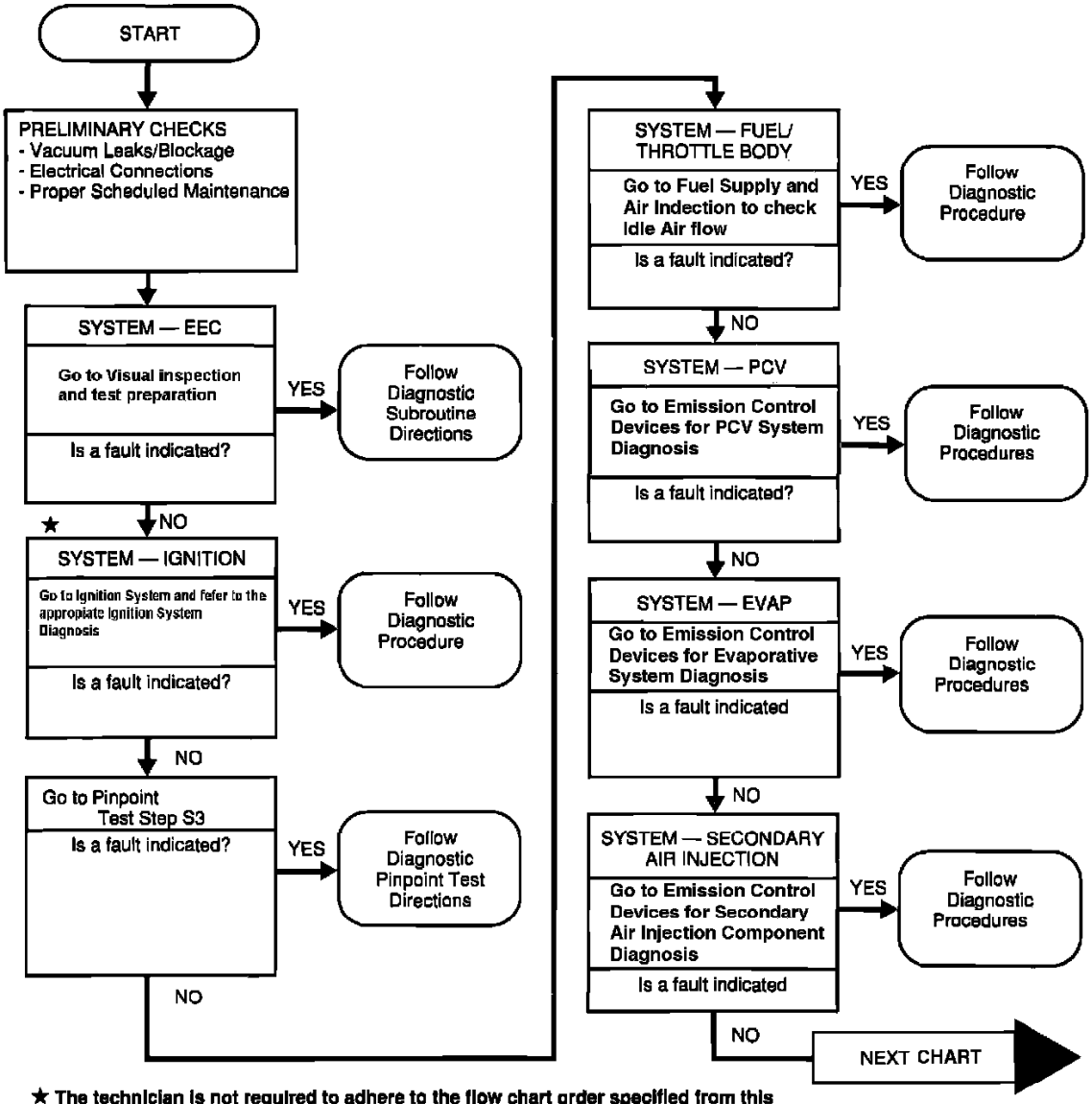

★ The technician is not required to adhere to the flow chart order specified from this Routine and beyond due to variations in vehicle type, system accessibility, vehicle history or technician experience.

Diagnosis By Symptom Flow Chart

Symptom	OASIS Number
Warning Indicators (MIL, DCL, SIL, TCIL, 4x4 LOW)	206000
Manual Transmission Concerns	
—Shift Indicator Light	505698

NOTE: **For Thunderbird SC with a "SIL/Chime On" concern, verify that the customer has read the Owner's Guide on the OVERHEAT/OVER RPM protection feature.**

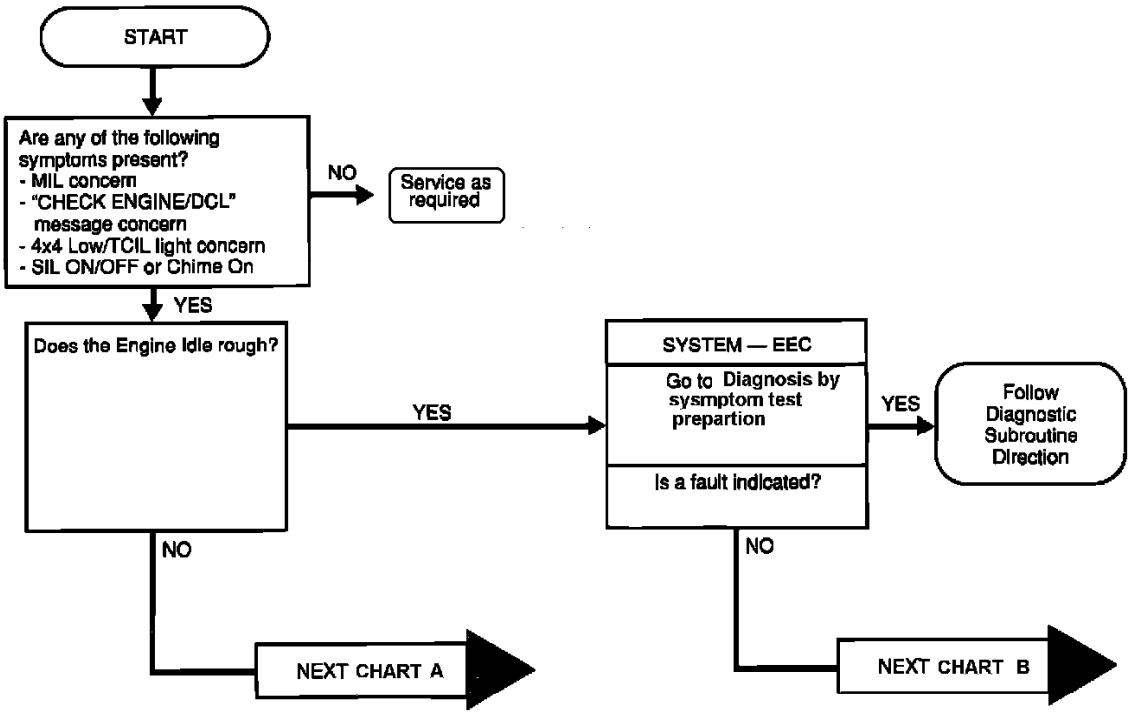

Diagnosis By Symptom Flow Chart

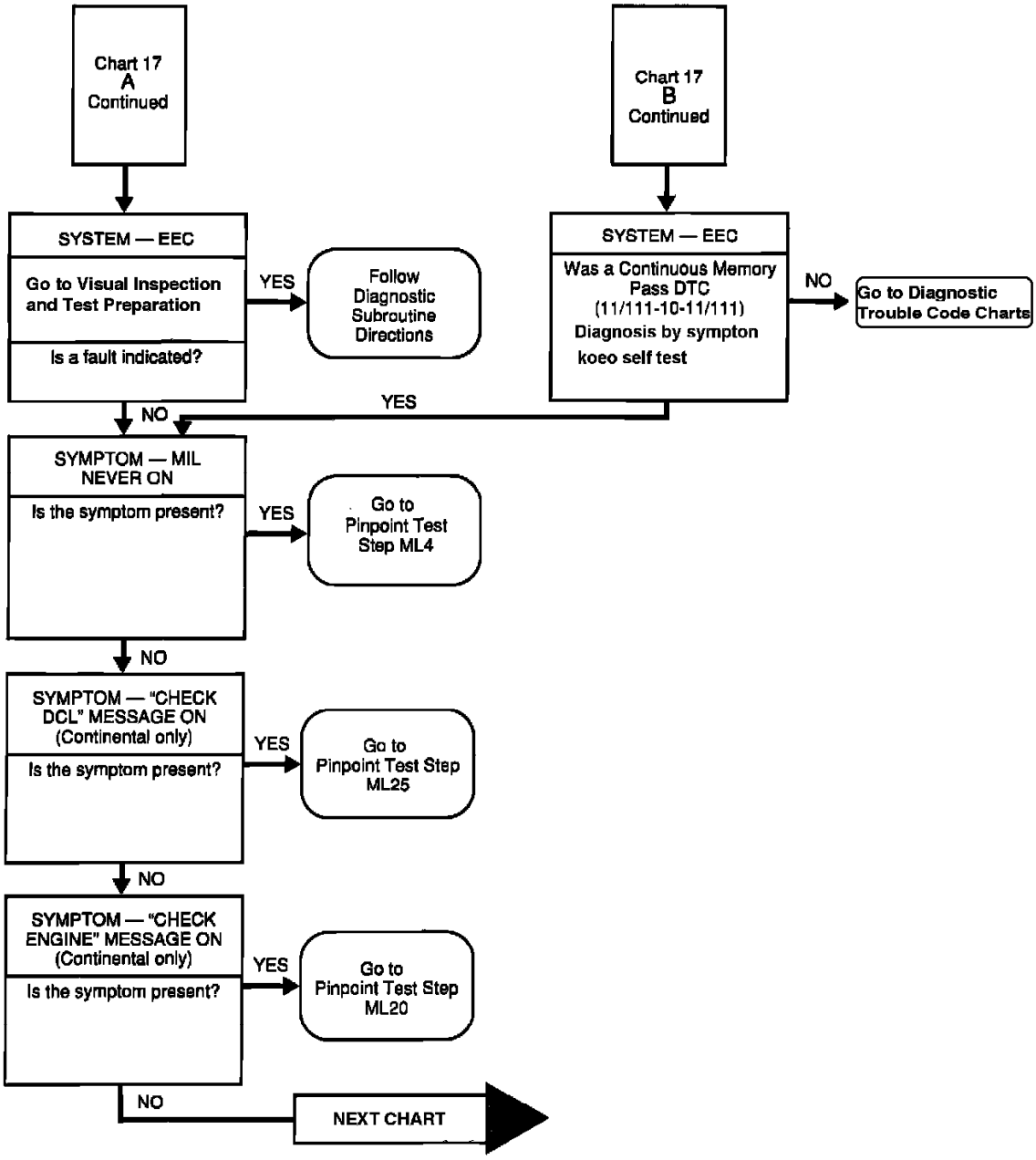

Chart 17 (Part 2 of 3)

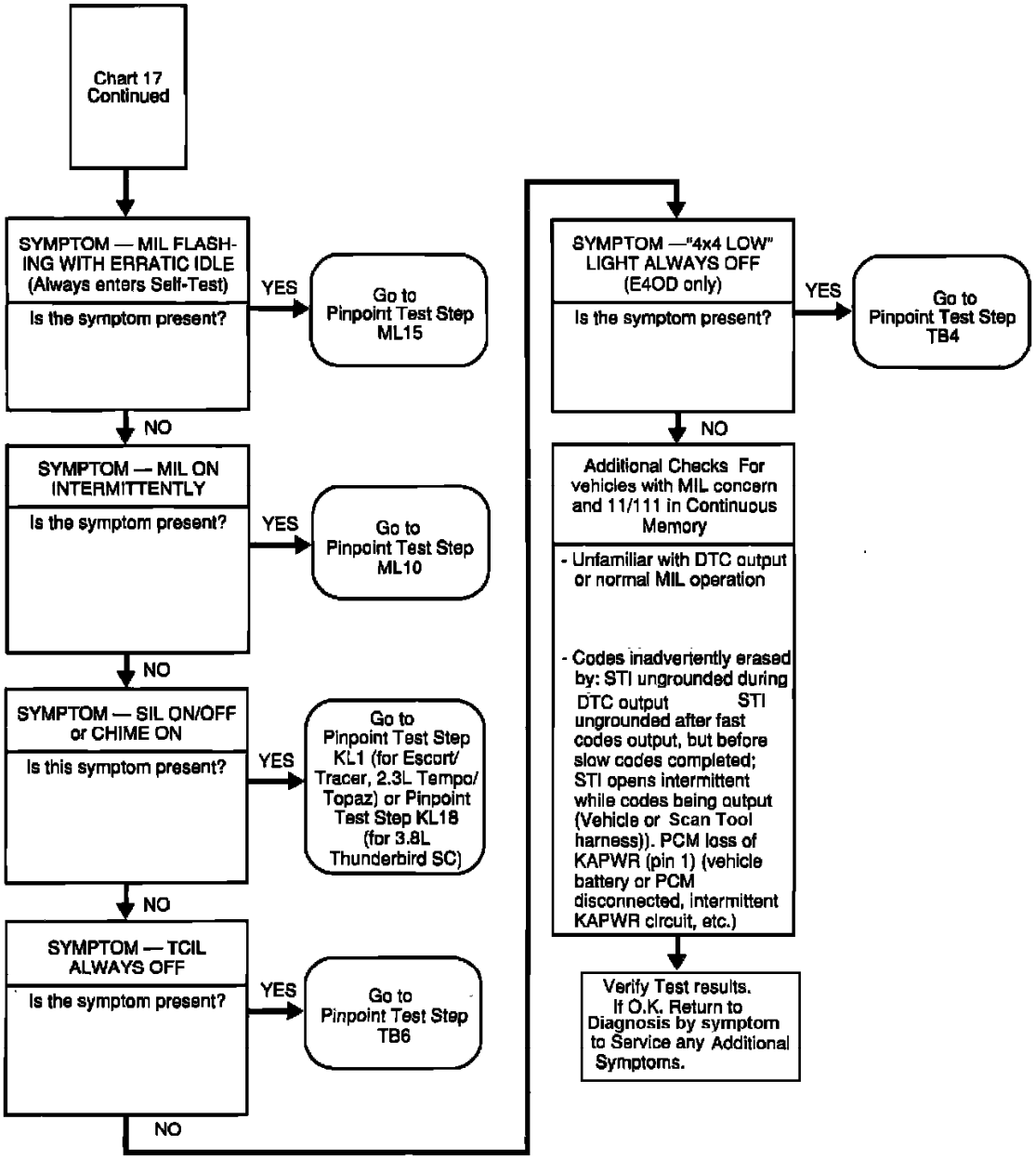

Diagnosis By Symptom Flow Chart

Symptom	OASIS Number
Warning Indicators (MIL, DCL, SIL, TCIL, 4x4 LOW)	206000
Manual Transmission Concerns	
—Shift Indicator Light	505698

NOTE: **For Thunderbird SC with a "SIL/Chime On" concern, verify that the customer has read the Owner's Guide on the OVERHEAT/OVER RPM protection feature.**

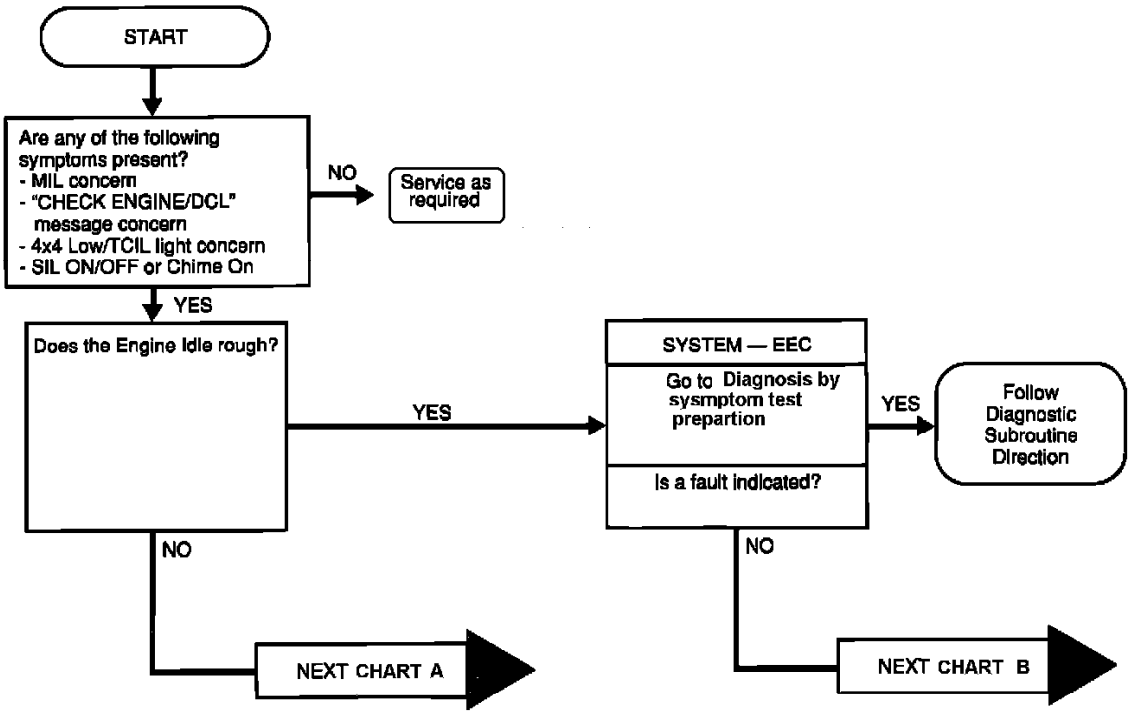

Diagnosis By Symptom Flow Chart

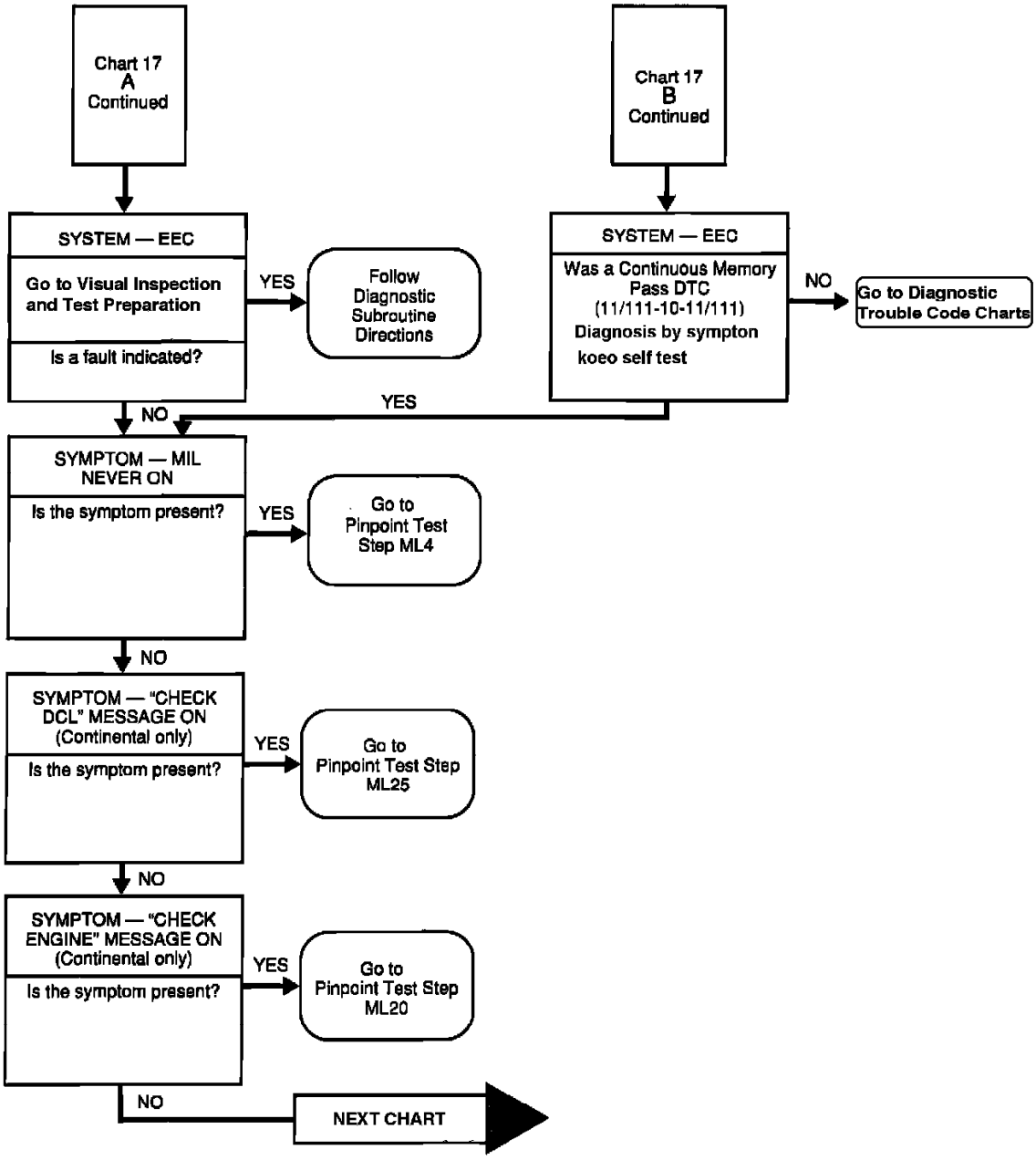

Chart 17 (Part 2 of 3)

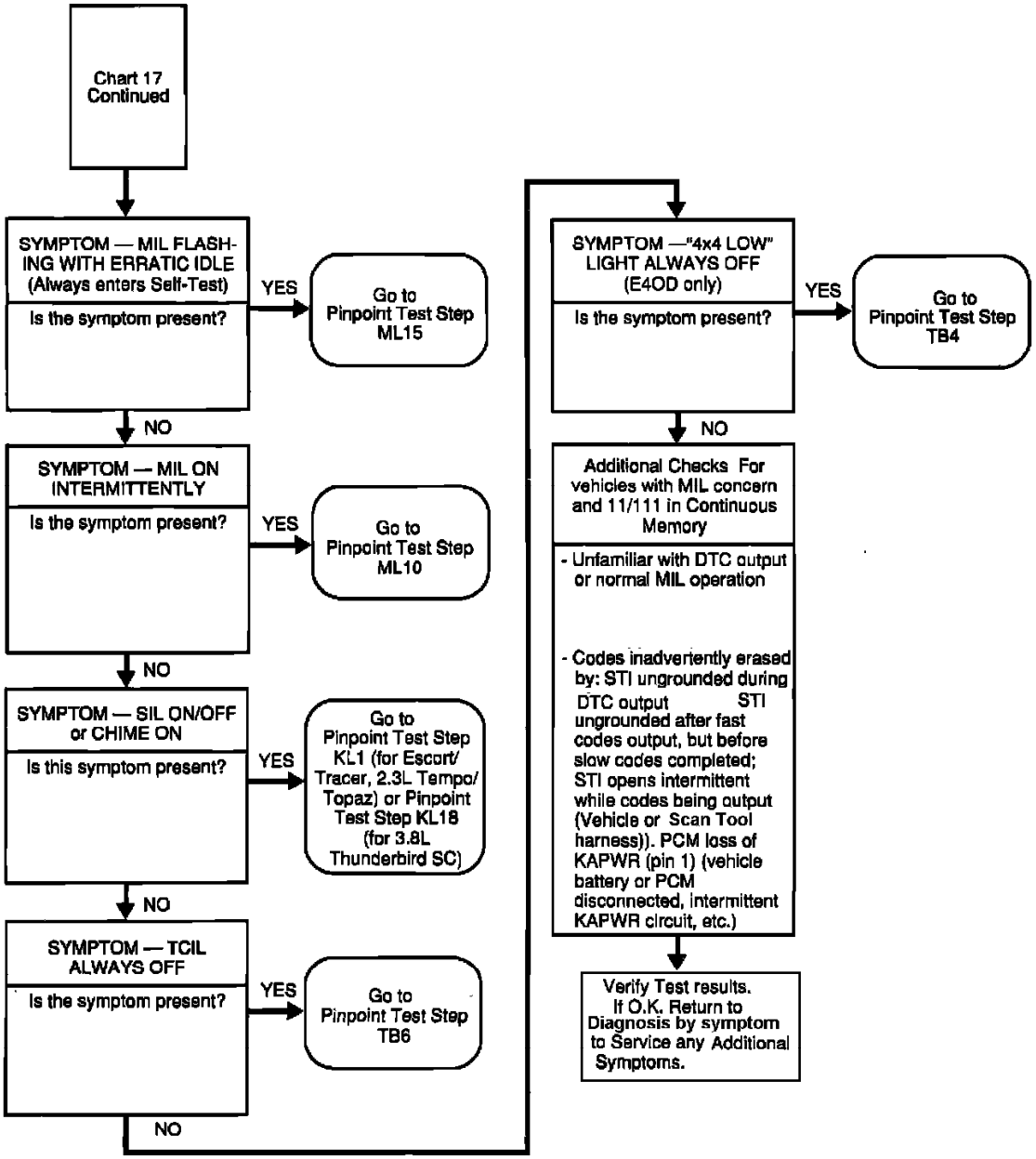

Diagnosis By Symptom Flow Chart

Symptom	OASIS Number
Automatic Transmission Shift Concerns	
—Upshift	501000
—Downshift	502000
—Engagement	503000

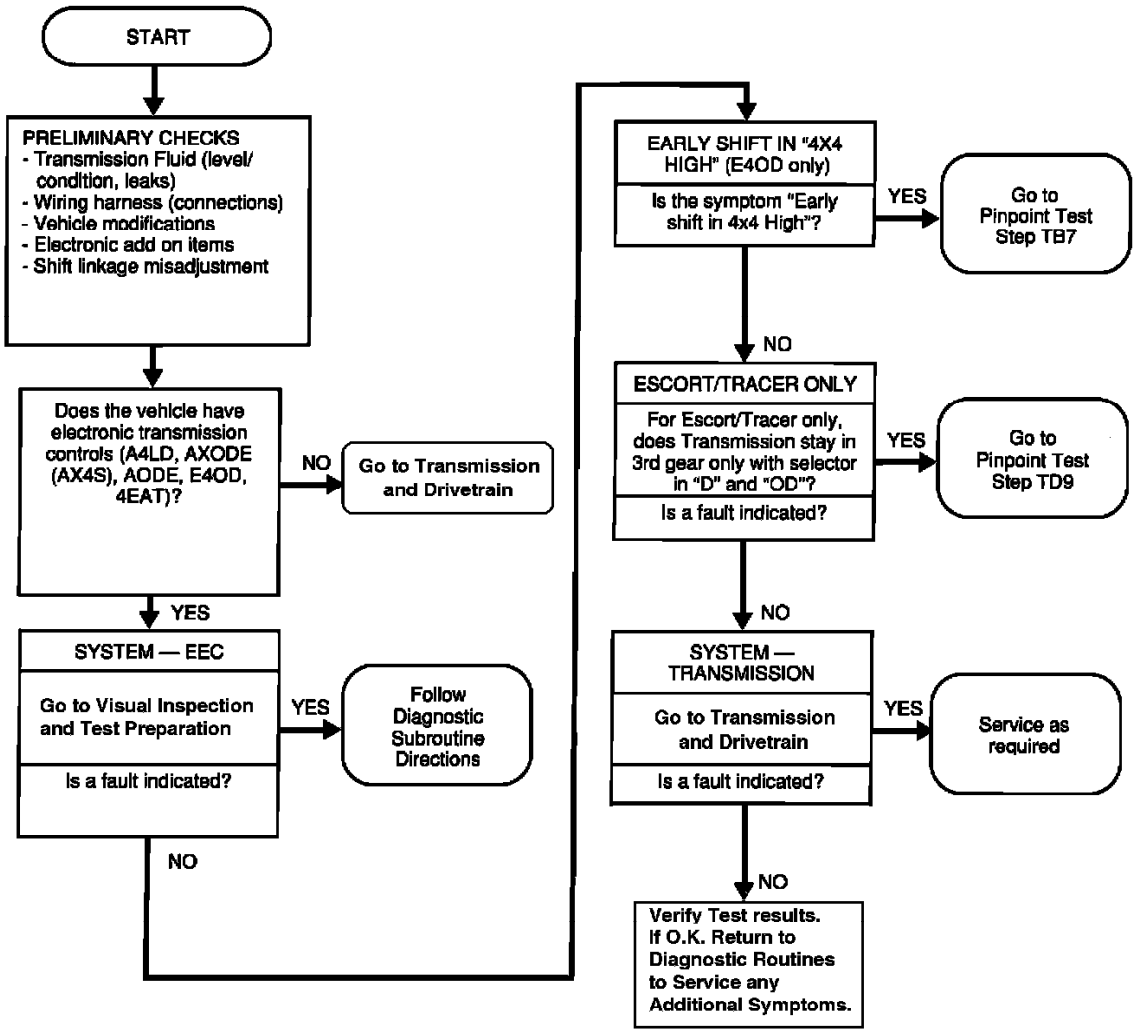

Chart 18

Symptom	OASIS Number
Oil System Concerns	401000
—High Oil Consumption	401100
—Leaks	401800

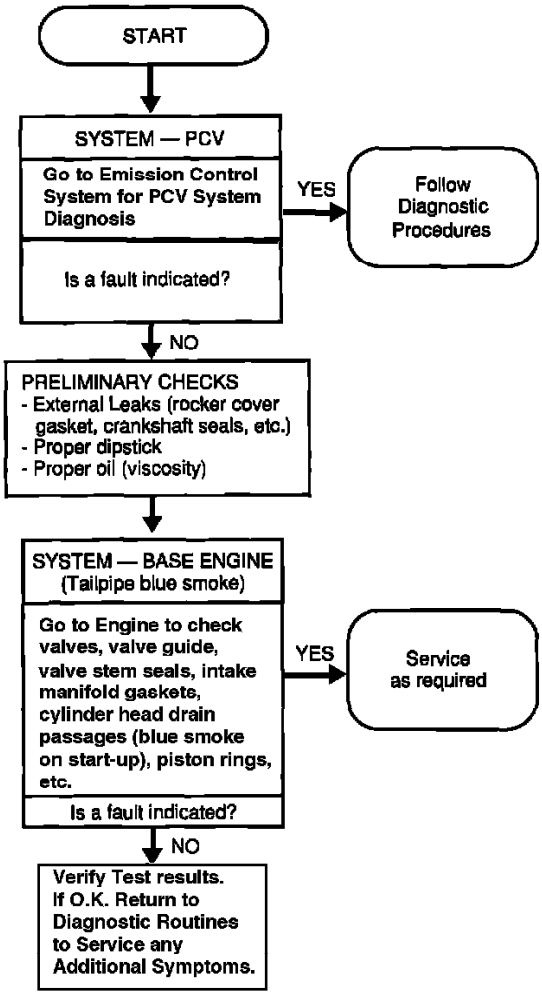

Chart 20

Symptom	OASIS Number
Cooling System Concerns —Overheating	402000 402300

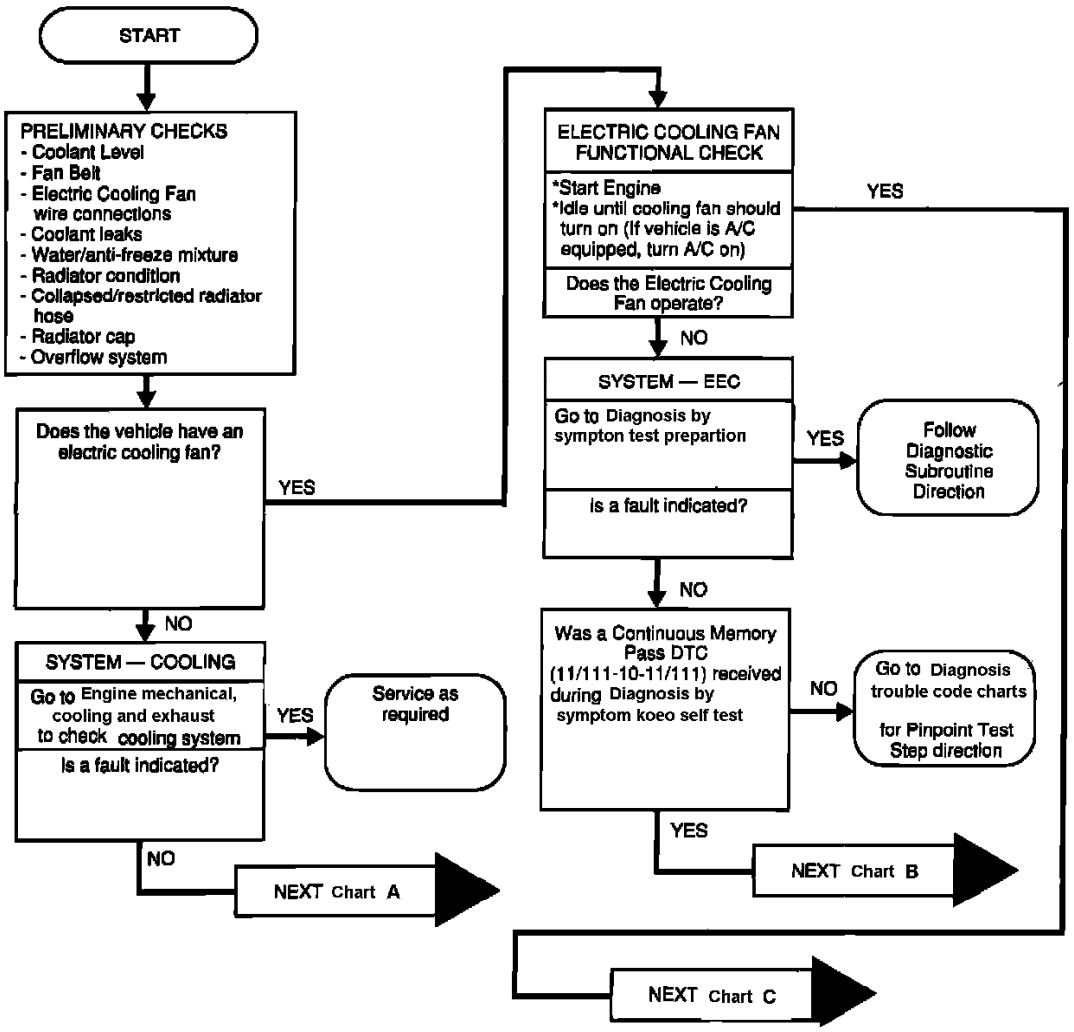

Diagnosis By Symptom Flow Chart

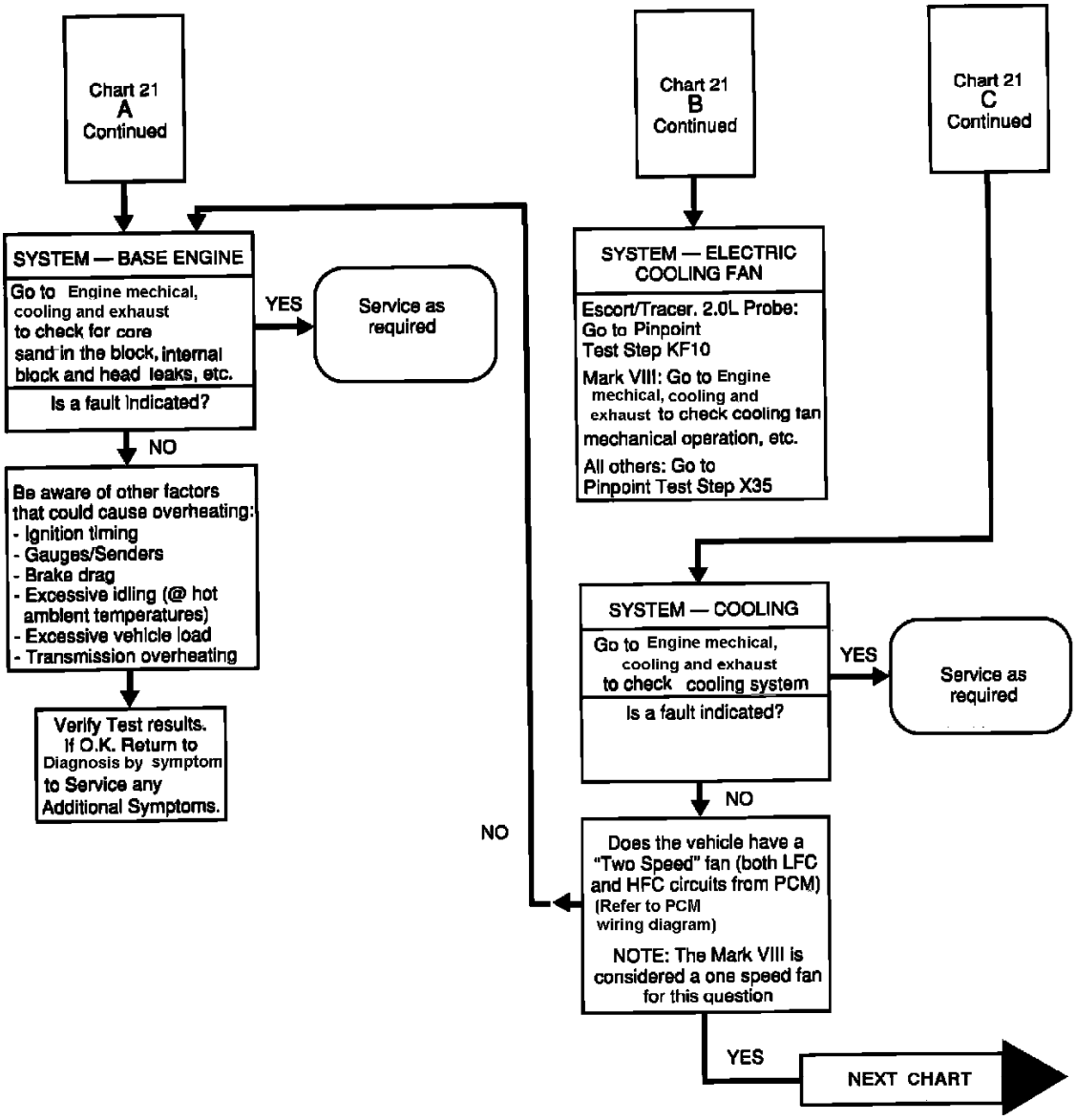

Diagnosis By Symptom Flow Chart

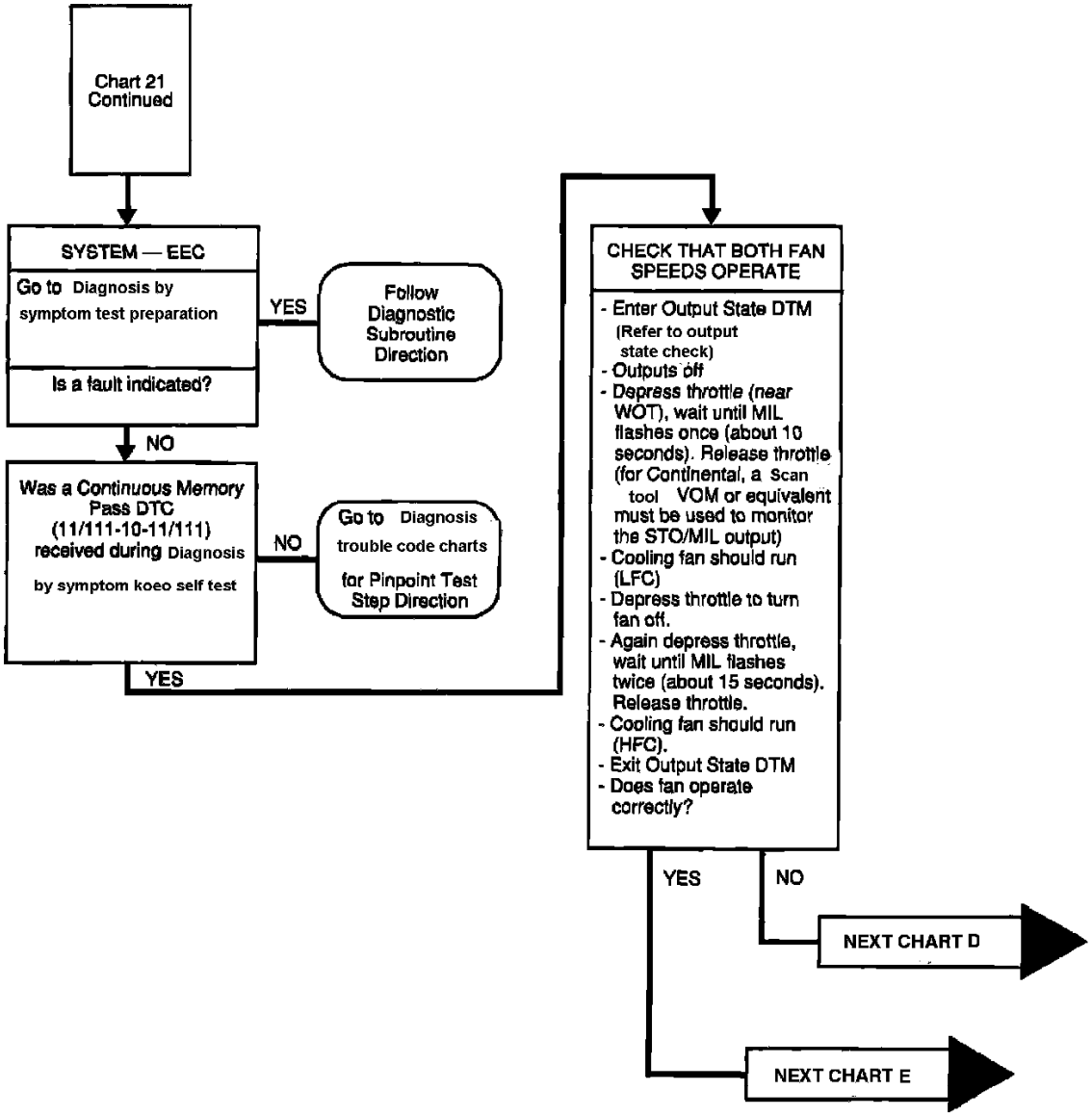

Diagnosis By Symptom Flow Chart

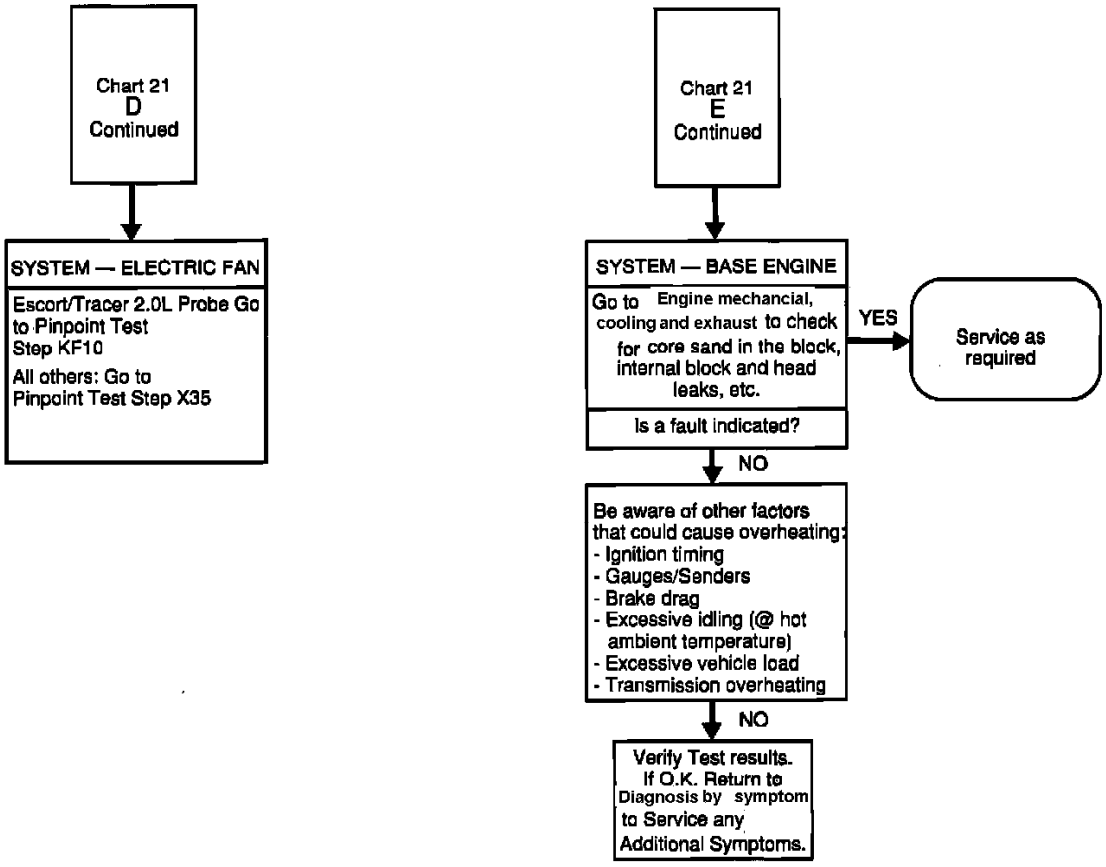

Diagnosis By Symptom Flow Chart

Symptom	OASIS Number
Cooling System Concerns —Runs Cold	402000

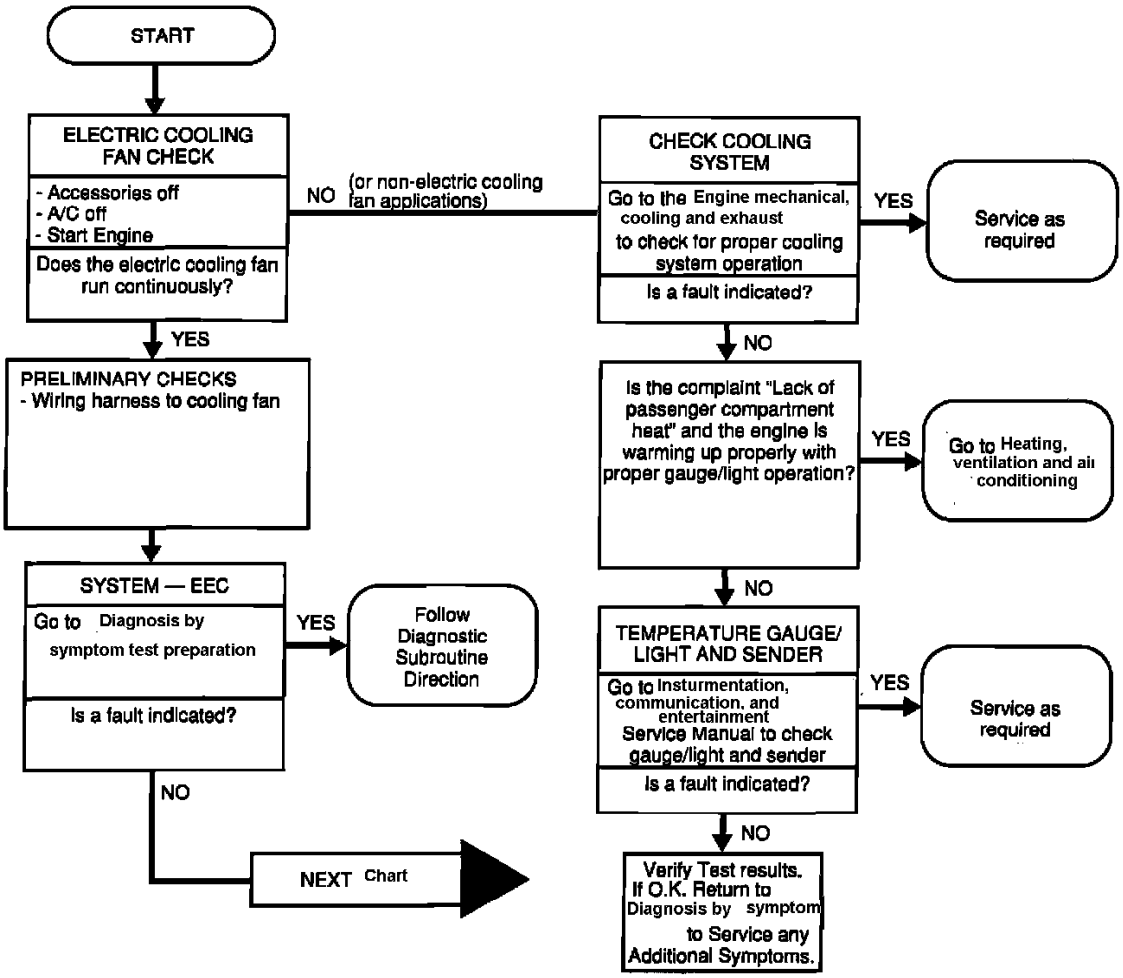

Diagnosis By Symptom Flow Chart

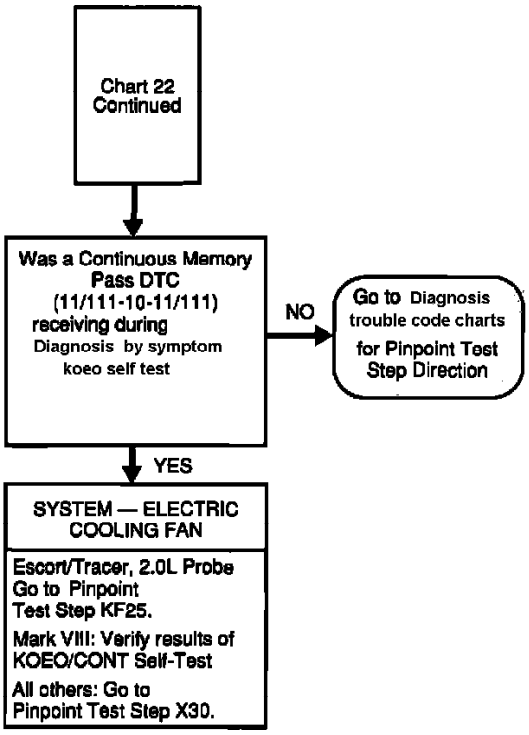

Diagnosis By Symptom Flow Chart

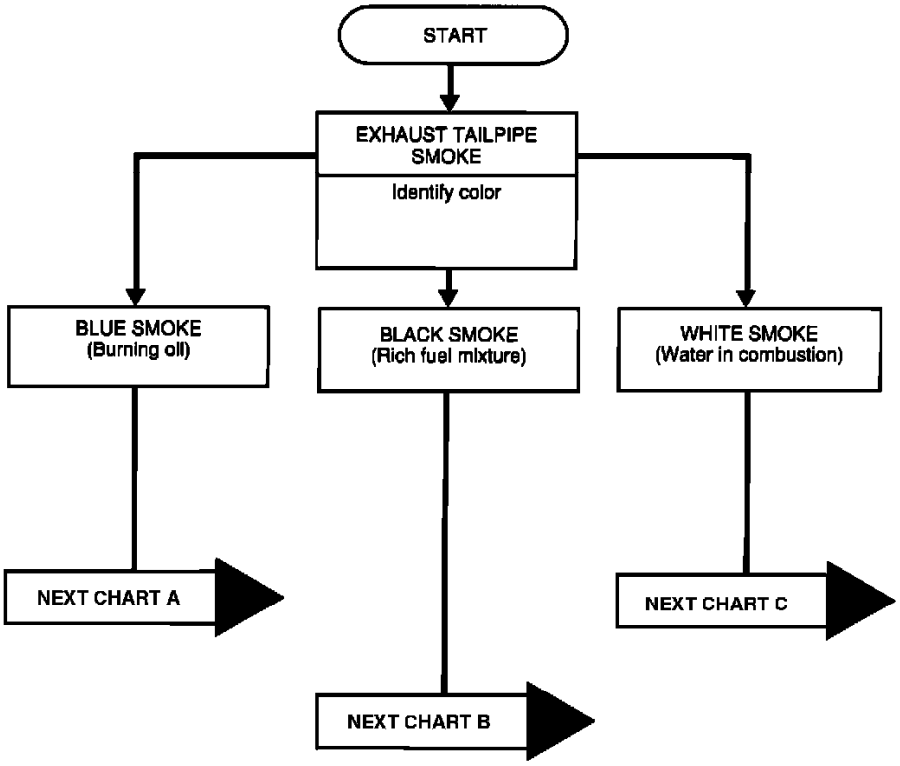

Chart 23 (Part 1 of 3)

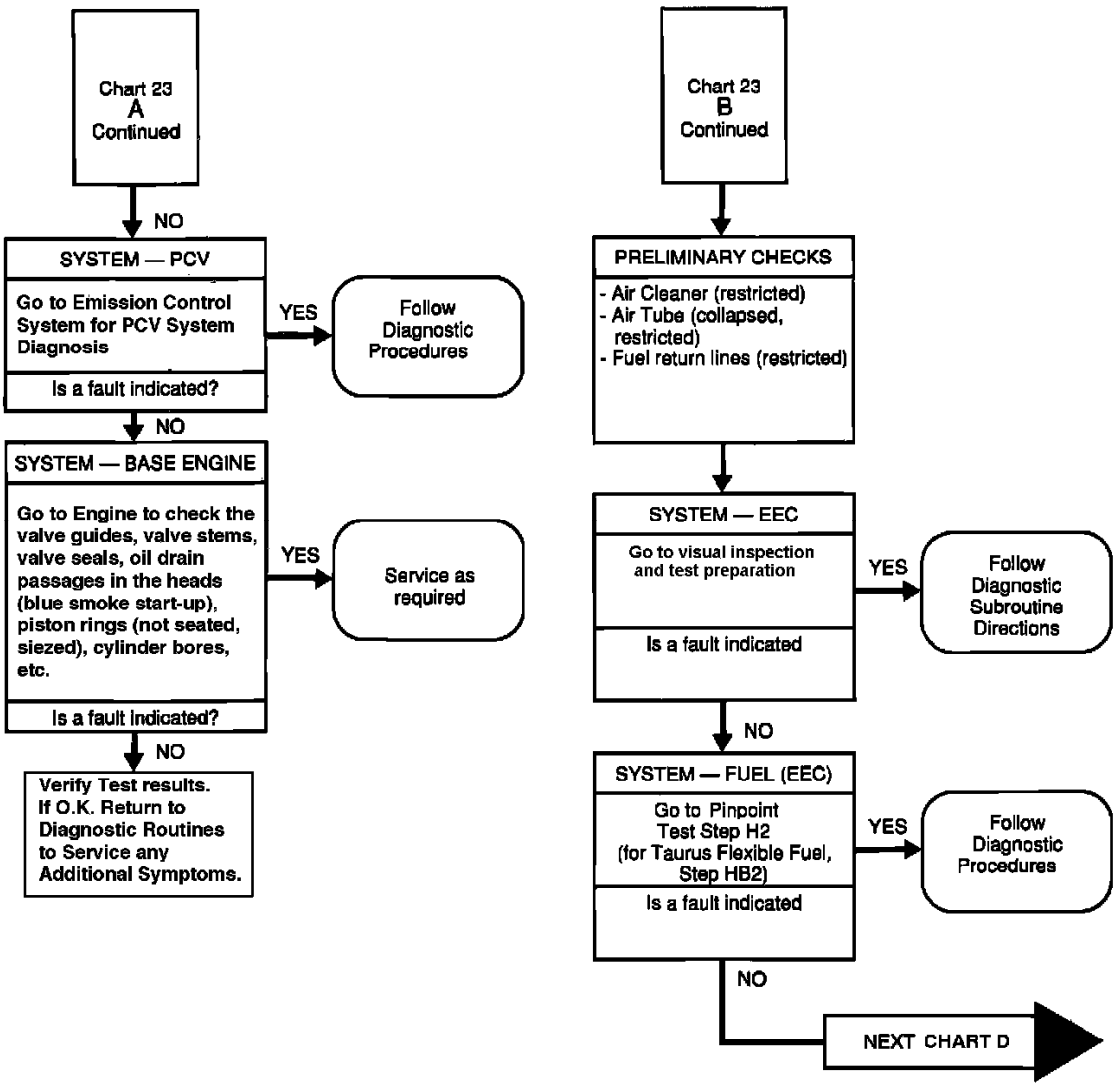

Chart 23 (Part 2 of 3)

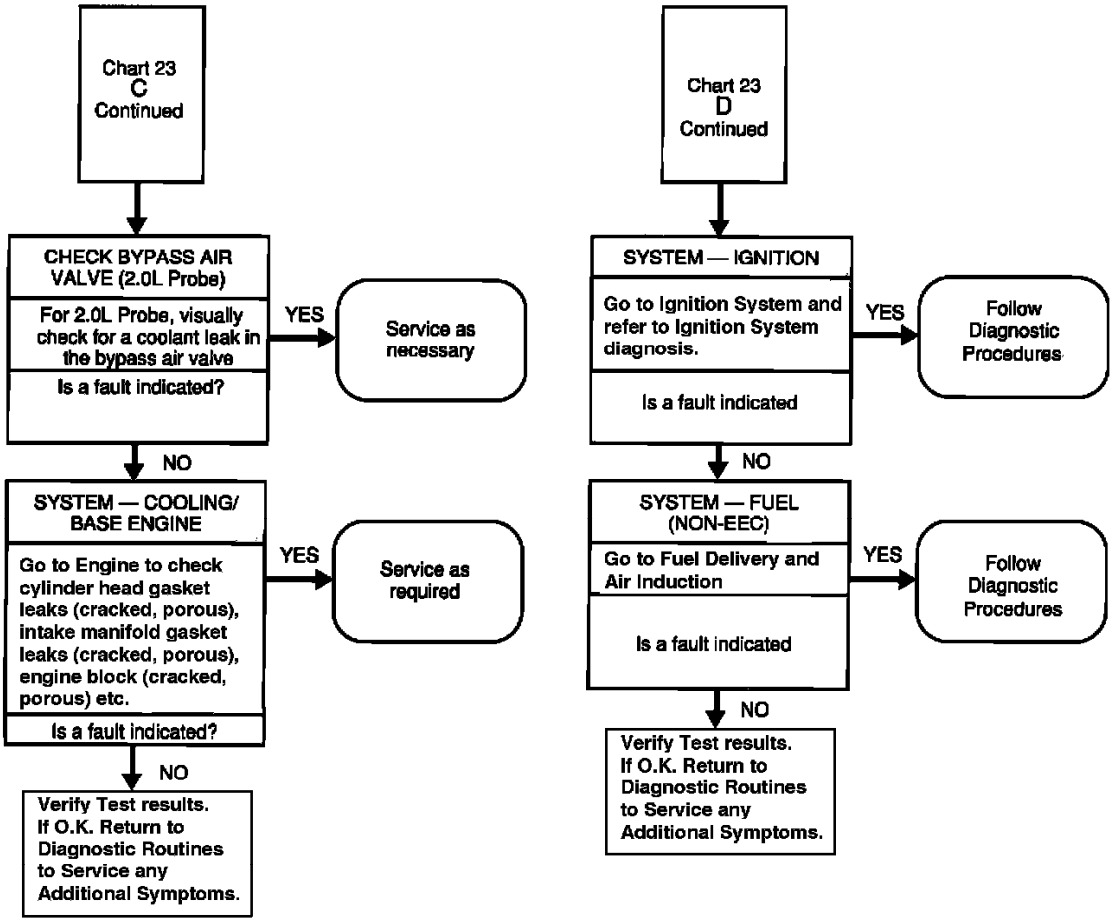

Chart 23 (Part 3 of 3)

Symptom	OASIS Number
Fuel System Concerns	404000
—Odor, Engine Compartment	404201

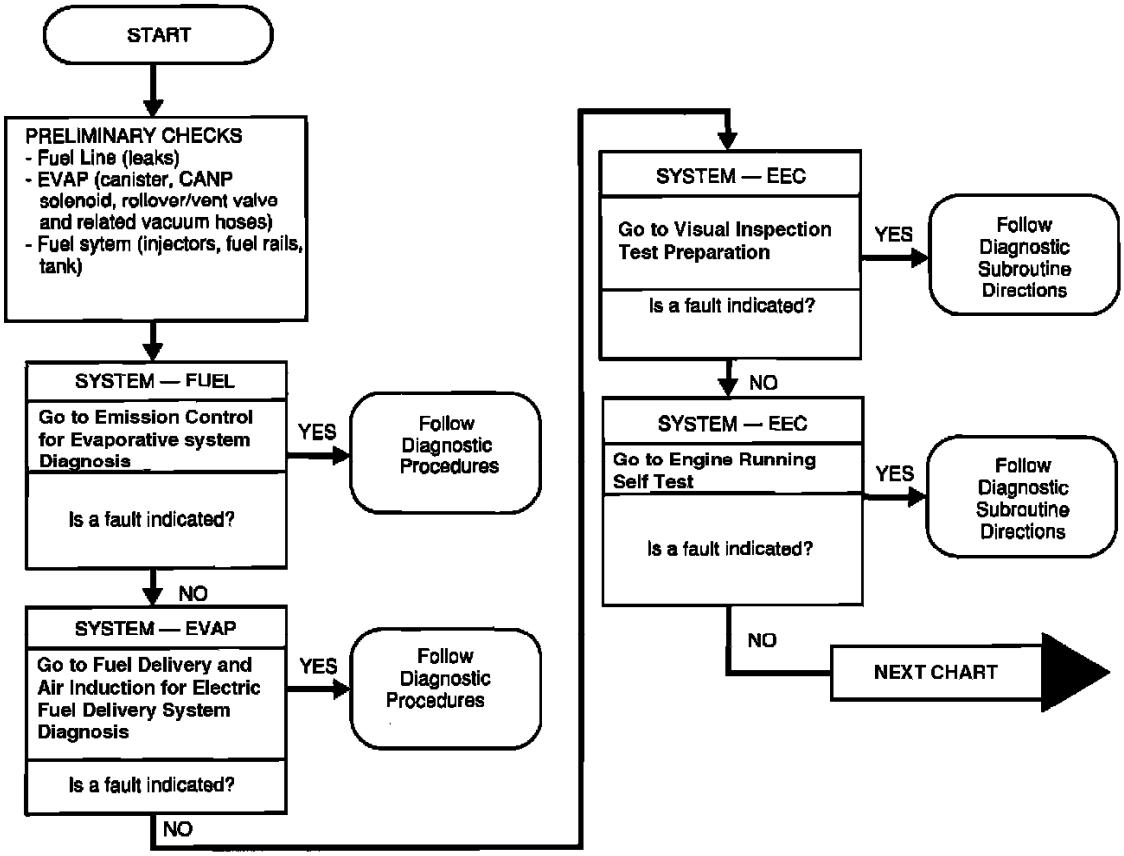

Chart 24 (Part 1 of 2)

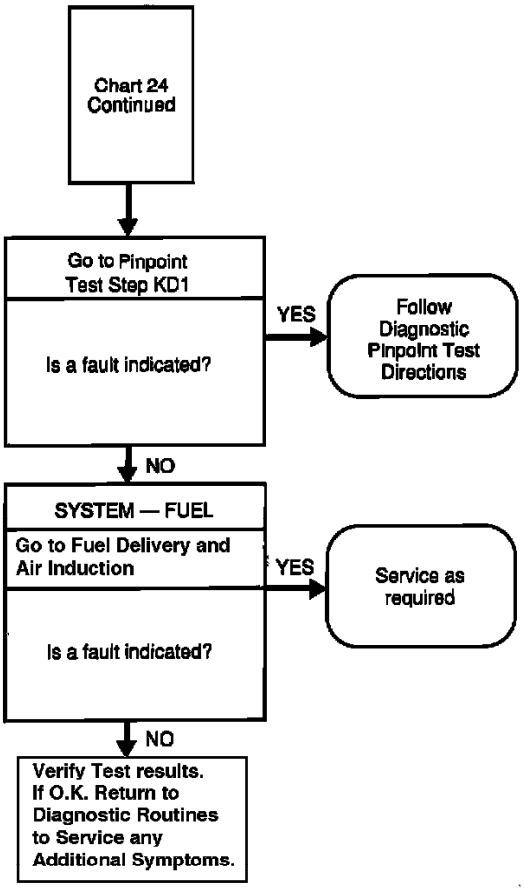

Chart 24 (Part 2 of 2)

Symptom	OASIS Number
Engine Noise (Under Hood)	497000

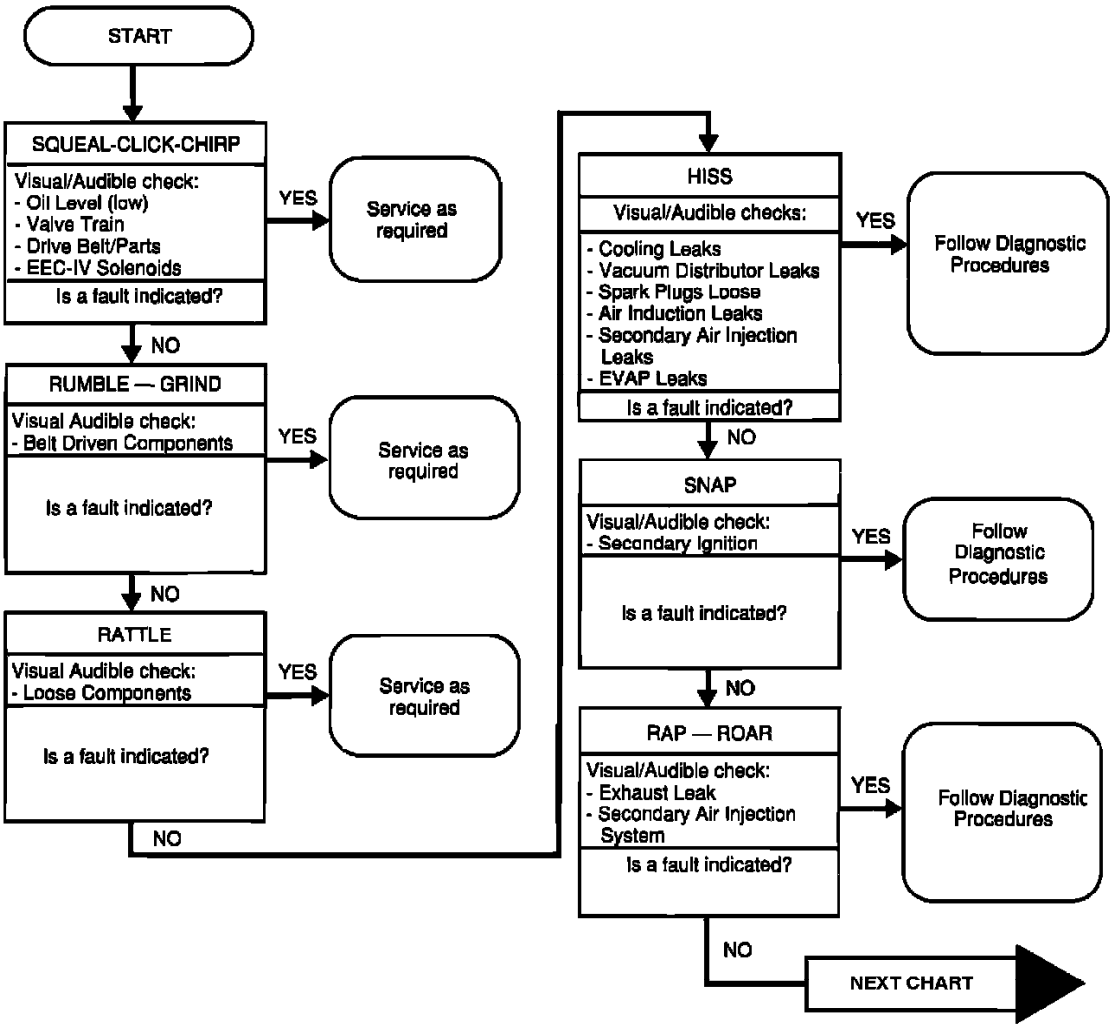

Chart 25 (Part 1 Of 2)

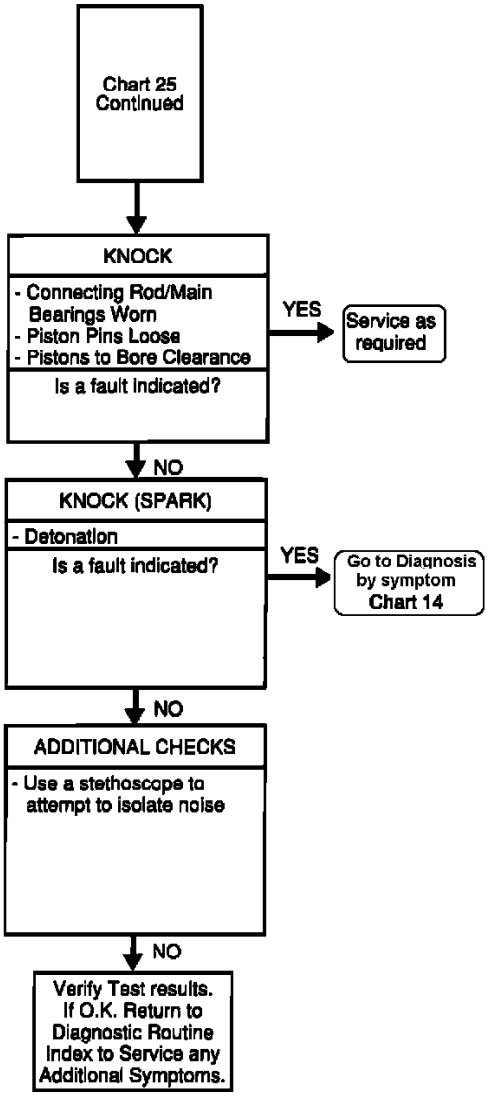

Diagnosis By Symptom Flow Chart

Symptom	OASIS Number
Vibration Concerns	703000

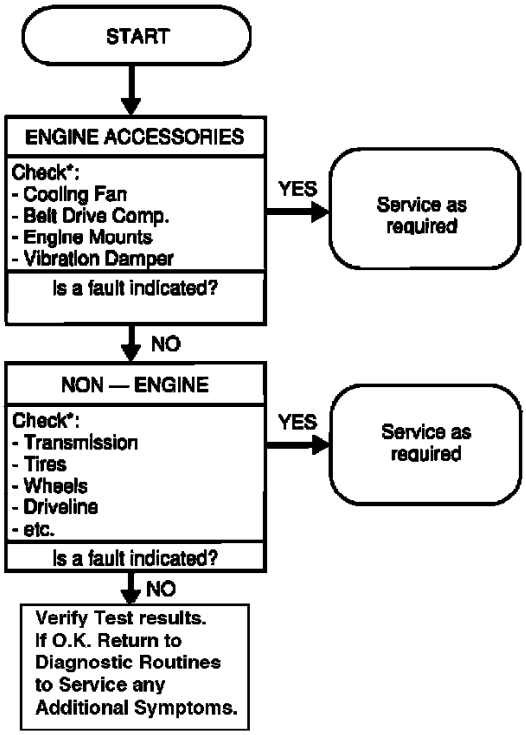

Chart 26

Symptom	OASIS Number
Climate Control —Lack of Cooling (A/C) (A/C not functioning)	208000 208200

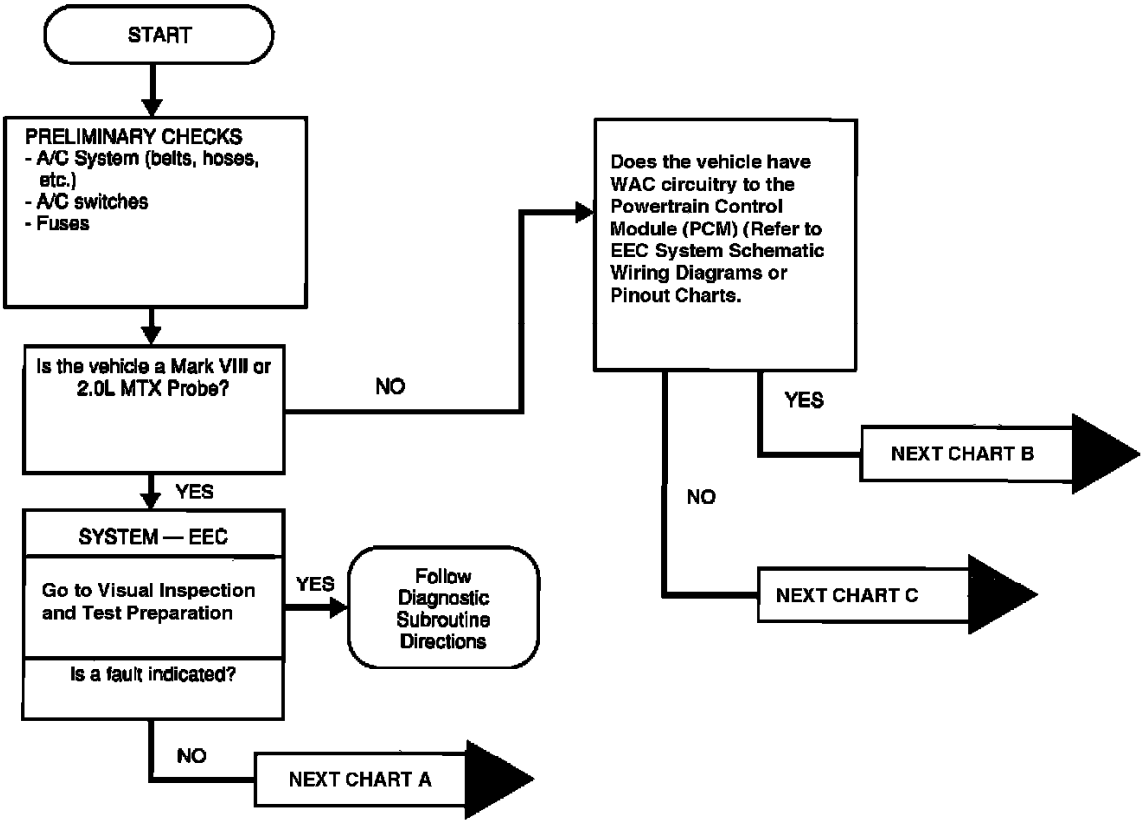

Chart 29 (Part 1 of 3)

Symptom	OASIS Number
Climate Control —A/C Always On —A/C Compressor Runs Continuously	208000

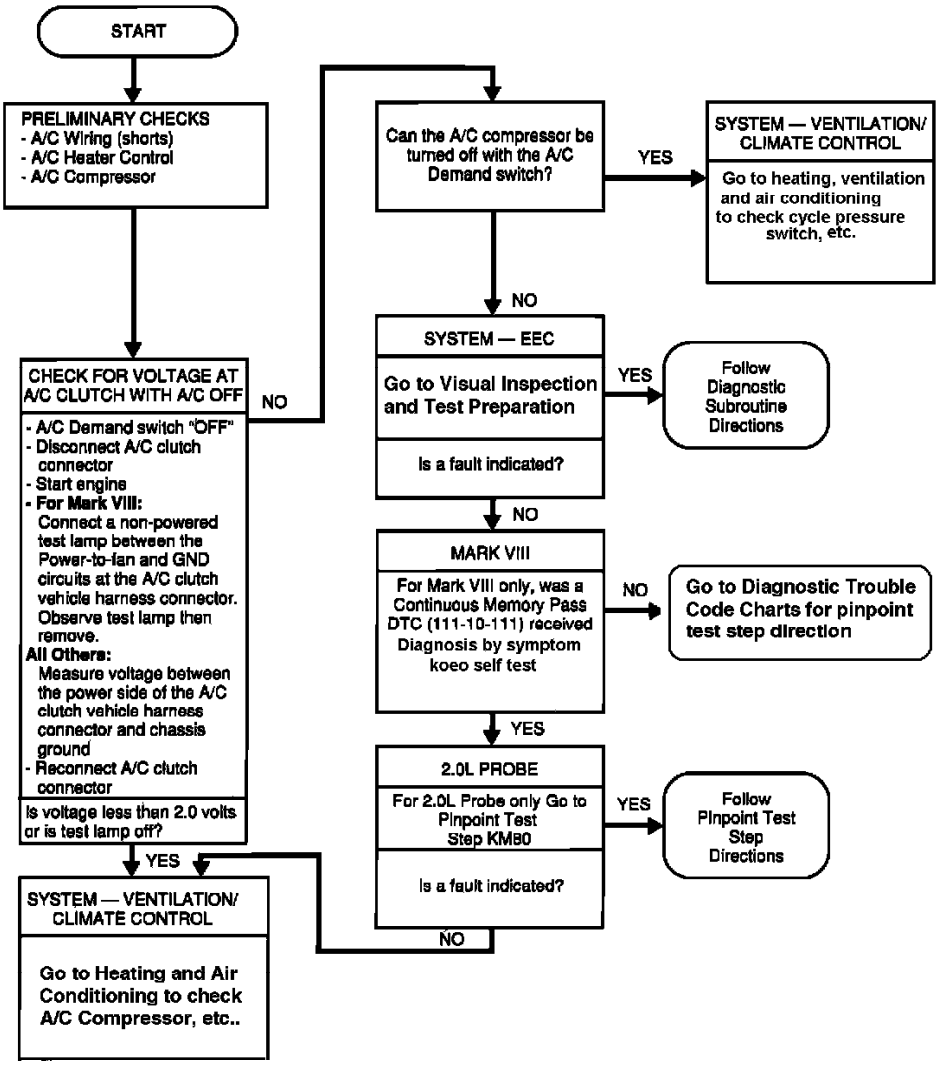

Chart 30

Symptom	OASIS Number
Climate Control —A/C Does Not CUT-OFF Under WOT Conditions (applications with WAC circuitry)	208000

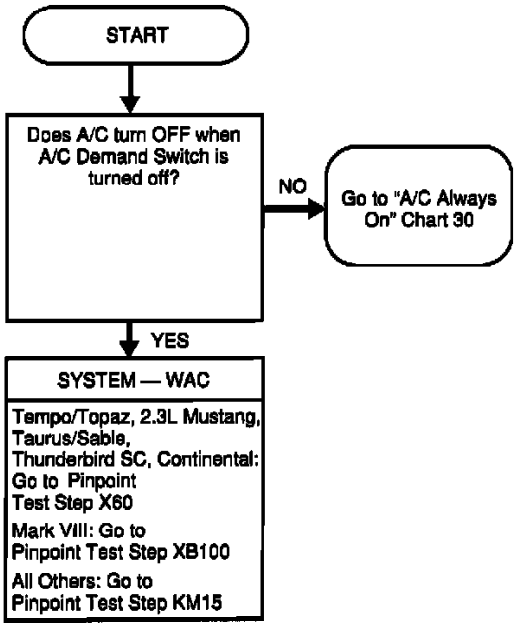

Diagnosis By Symptom Flow Chart

Symptom	OASIS Number
No Symptom Present —EEC-IV Quick Test	—

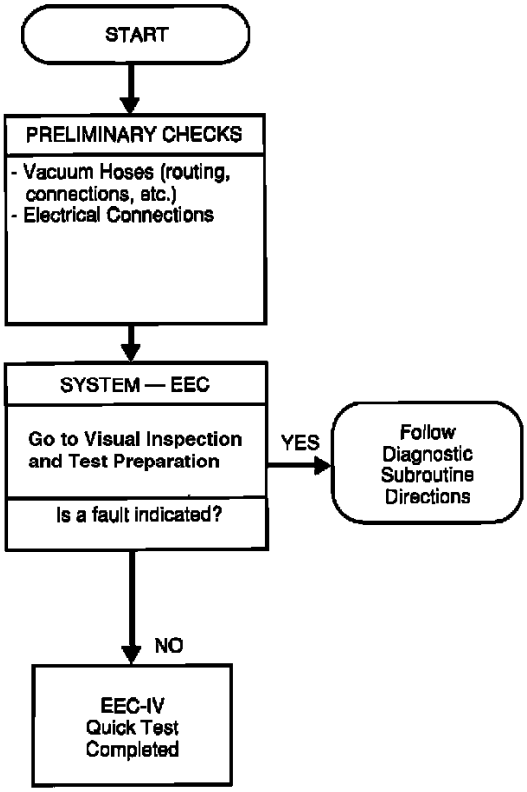

Chart 32

Symptom	OASIS Number
Lighting Systems—Exterior Lighting	201000
—Stoplamps Always On	201228
—Stoplamps Always Off	

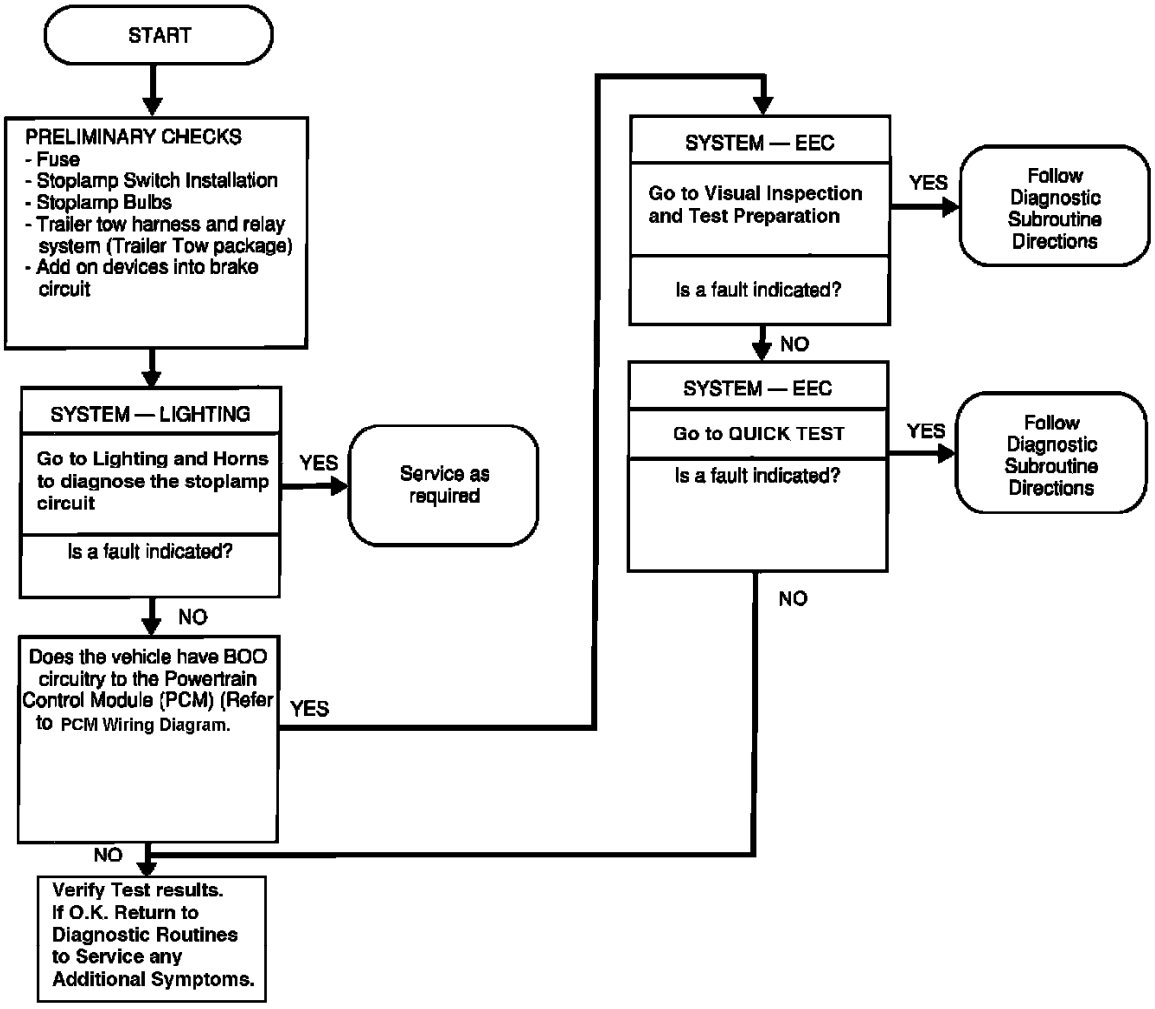

Chart 33

Symptom	OASIS Number
Exhaust System Concerns	403000
—Odor (Sulphur/"Rotten Egg" Smell)	403596

NOTE: **Some slight sulphur smell may be normal. Catalysts with less than 5-10 thousand miles (new vehicle or replaced catalyst) are more likely to have a sulphur smell concern due to the highly active state of new catalysts (for this reason, just replacing the catalyst if no problem is found may actually make the symptom worse.**

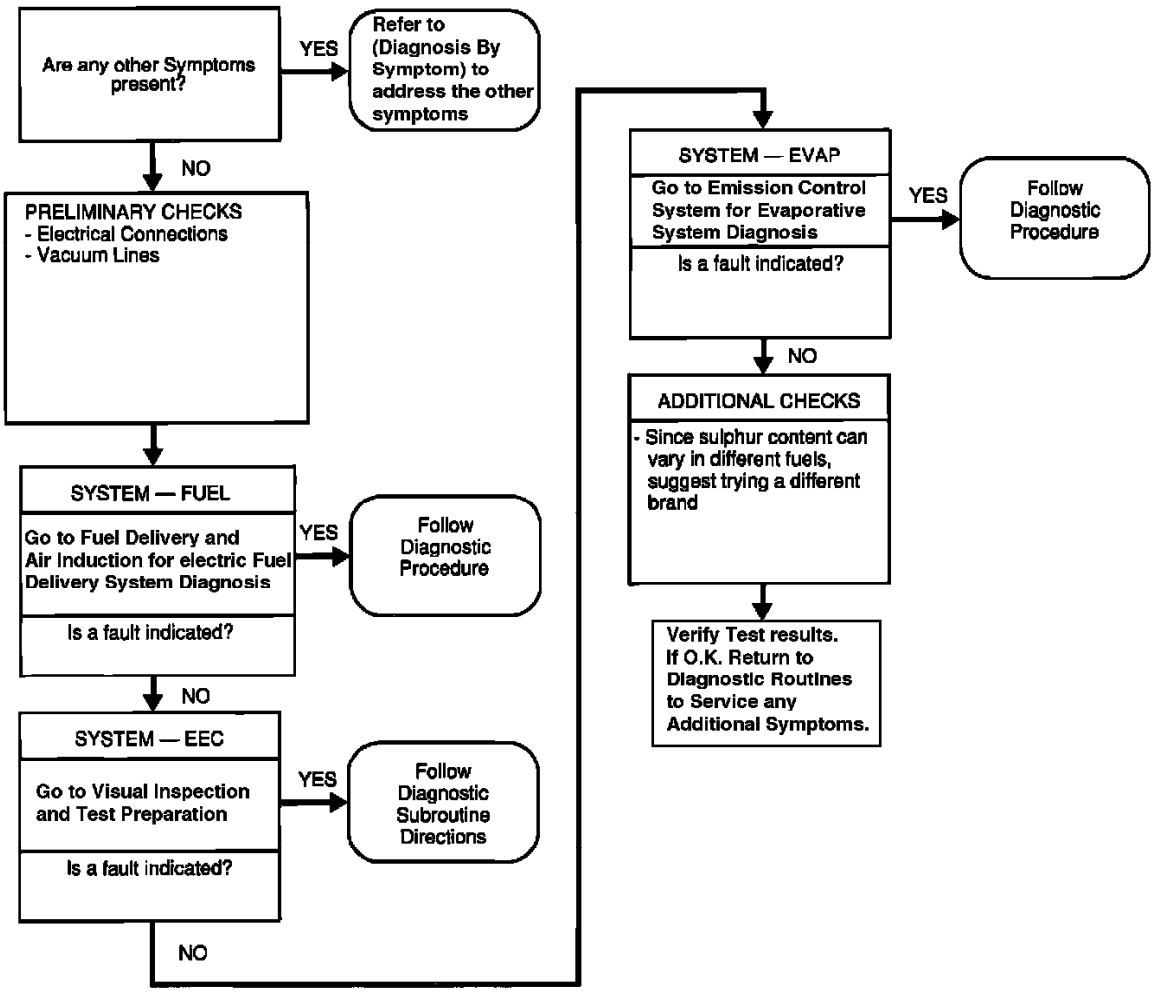

Diagnosis By Symptom Flow Chart

System	Possible Causes	
	Visual/Mechanical	EEC-IV
Air/Vacuum	•Check vacuum lines for leaks or wear. •Check air intake system.	•TP sensor •MAP/BP sensor •MAF sensor •ACT sensor
Ignition	•Check for correct base timing. •Inspect TFI, DIS or EDIS module for damage.	•Ignition System: IDM signal
Fuel	•Check for correct fuel pressure. •Check fuel lines for water, dirt, rust, or restrictions.	•HEGO sensor(s) •FPR solenoid
Other	•Check EGR valve sticking. •Check for PCV valve for correct operation. •Check for restricted exhaust. •Check engine oil quality and level. •Check engine coolant quality and level. •Check thermostat for proper operation. •Check MIL bulb and circuit for correct operation. •Inspect electrical connections, wires, and harnesses.	•EGR Systems: •EGRT, EVP or PFE sensor •ECT sensor •STO/MIL signal •EEC-IV Power: VREF •EEC-IV Ground: SIG RTN

Check Engine Light On

System	Possible Causes	
	Visual/Mechanical	EEC-IV
E4OD Transmission	●Check transmission fluid level. ●Check transmission fluid for contamination. ●Check for transmission fluid leaks. ●Check transmission pressures. ●Check E4OD connector for corrosion, bent pins, or damage.	●SS1 solenoid ●SS2 solenoid ●CCC solenoid ●OCS switch ●MLPS sensor
AXOD-E Transmission	●Check transmission fluid level. ●Check transmission fluid for contamination. ●Check for transmission fluid leaks. ●Check transmission pressures. ●Check AXOD-E connector for corrosion, bent pins, or damage.	●SS1 solenoid ●SS2 solenoid ●SS3 solenoid ●CCC/MCCC solenoid ●TSS sensor ●MLPS sensor
4EAT Transmission (Integrated)	●Check transmission fluid level. ●Check transmission fluid for contamination. ●Check for transmission fluid leaks. ●Check transmission pressures. ●Check 4EAT connector for corrosion, bent pins, or damage.	●SS1 solenoid ●SS2 solenoid ●SS3 solenoid ●CCC solenoid ●TSR circuit ●TSOD circuit ●TSD circuit ●TSL circuit ●TSS sensor
AOD-E Transmission	●Check transmission fluid level. ●Check transmission fluid for contamination. ●Check for transmission fluid leaks. ●Check transmission pressures. ●Check AOD-E connector for corrosion, bent pins, or damage.	●SS1 solenoid ●SS2 solenoid ●CCC/MCCC solenoid ●OSS sensor ●MLPS sensor
A4LD Transmission	●Check transmission fluid level. ●Check transmission fluid for contamination. ●Check for transmission fluid leaks. ●Check transmission pressures. ●Check A4LD connector for corrosion, bent pins, or damage.	●CCO solenoid ●SS 3/4 solenoid
Other	●Inspect TFI, DIS, or EDIS module for damage. ●Inspect electrical connections, wires, and harnesses. ●Check shift linkage and adjustment. ●Check internal transmission components.	●Ignition System: PIP signal SPOUT signal ●TP sensor ●MAP/BP sensor ●MAF sensor ●VSS sensor ●PSOM signal ●4 x 4 L switch ●BOO switch

Erratic Or Hunting Shifts

System	Possible Causes	
	Visual/Mechanical	EEC-IV
E4OD Transmission	•Check transmission fluid level. •Check transmission fluid for contamination. •Check for transmission fluid leaks. •Check transmission pressures.	•MLPS sensor •EPC solenoid
AXOD-E Transmission	•Check transmission fluid level. •Check transmission fluid for contamination. •Check for transmission fluid leaks. •Check transmission pressures.	•MLPS sensor •EPC solenoid •TSS sensor
4EAT Transmission (Integrated)	•Check transmission fluid level. •Check transmission fluid for contamination. •Check for transmission fluid leaks. •Check transmission pressures.	•TOT sensor •TSR circuit •TSOD circuit •TSD circuit •TSL circuit •TSS sensor
AOD-E Transmission	•Check transmission fluid level. •Check transmission fluid for contamination. •Check for transmission fluid leaks. •Check transmission pressures.	•EPC solenoid •OSS sensor •TOT sensor •MLPS sensor
A4LD Transmission	•Check transmission fluid level. •Check transmission fluid for contamination. •Check for transmission fluid leaks. •Check transmission pressures.	•None
Other	•Inspect electrical connections, wires, and harnesses. •Check for damaged U-joints. •Check internal transmission components. •Check for driveline modifications or aftermarket accessories.	•TP sensor •MAP/BP sensor •MAF sensor •VSS sensor •ACT sensor •RPMS sensor •PSOM signal •ACC, ACCS, ACD, ACON, or WAC circuit(s)

Hard Or Soft Shifts

System	Possible Causes	
	Visual/Mechanical	EEC-IV
Air/Vacuum	•Check vacuum lines for leaks or wear. •Check air filter. •Check air intake system.	•ISC solenoid •MAP/BP sensor •MAF sensor •TP sensor •ACT sensor
Fuel	•Check for correct fuel pressure. •Check for fuel contamination/quality. •Check fuel filter.	•HEGO sensor(s) •FPRC solenoid •Fuel Injections: INJ 1, 2 (EFI) INJ 1, 2 .. (SEFI)
Ignition	•Check for correct base timing. •Check distributor cap, adapter, and rotor. •Inspect spark plugs and plug wires. •Inspect TFI, DIS, or EDIS module for damage.	•Ignition System: SPOUT signal SAW signal
Power and Grounds	•Check for low battery voltage. •Inspect electrical connections, wires, and harnesses.	•EEC-IV Power: VREF •EEC-IV Grounds: SIG RTN
Other	•Check coolant and engine oil levels. •Check thermostat for proper operation. •Check EGR valve sticking. •Check PCV valve for correct operation. •Check for restricted exhaust. •Check for sticking or binding throttle linkage. •Check for throttle body contamination. •Check for proper idle speed setting.	•ECT sensor •EGR Systems: EGRT, EVP or PFE sensor EGR solenoid(s) •A/C Systems: ACC, ACCS, WAC, ACD or ACON •NDS switch •PSPS switch •BLR switch •DEF switch •HDL switch •NDS signal •NGS/CES signal

Improper Idle Speed

System	Possible Causes	
	Visual/Mechanical	EEC-IV
Air/Vacuum	●Check vacuum lines for leaks or wear. ●Check air intake system.	●TP sensor ●MAP/BP sensor ●MAF sensor ●ISC solenoid
Fuel	●Check for correct fuel pressure. ●Check fuel lines for contamination or restrictions. ●Check for clogged fuel filter.	●Fuel Injection: INJ 1, 2 (EFI) INJ 1, 2 .. (SEFI) ●FPR solenoid ●HEGO sensor(s)
Ignition	●Check for correct base timing. ●Check for wear or corrosion in distributor. ●Inspect TFI, DIS, or EDIS module for damage.	●Ignition System: PIP signal SPOUT signal DPI signal VRS signal SAW signal KS sensor
Other	●Check EGR valve sticking. ●Check for PCV valve for correct operation. ●Check for restricted exhaust. ●Inspect electrical connections, wires, and harnesses. ●Check for partially binding brakes. ●Check camshaft timing and cylinder compression.	●EGR Systems: EGRT, EVP or PFE sensor EGR solenoid(s) ●AM1 solenoid ●AM2 solenoid ●EPC solenoid ●CCC/MCCC solenoid

Lack Of Power/Sluggish

System	Possible Causes	
	Visual/Mechanical	EEC-IV
E4OD Transmission	●Check transmission fluid level. ●Check transmission fluid for contamination. ●Check for transmission fluid leaks. ●Check transmission pressures. ●Check E4OD connector for corrosion, bent pins, or damage.	●SS1 solenoid ●SS2 solenoid ●EPC solenoid ●TOT sensor ●OCS switch ●MLPS sensor
AXOD-E Transmission	●Check transmission fluid level. ●Check transmission fluid for contamination. ●Check for transmission fluid leaks. ●Check transmission pressures. ●Check AXOD-E connector for corrosion, bent pins, or damage.	●SS1 solenoid ●SS2 solenoid ●SS3 solenoid ●EPC solenoid ●TSS sensor ●MLPS sensor ●TOT sensor
4EAT Transmission (Integrated)	●Check transmission fluid level. ●Check transmission fluid for contamination. ●Check for transmission fluid leaks. ●Check transmission pressures. ●Check 4EAT connector for corrosion, bent pins or damage.	●SS1 solenoid ●SS2 solenoid ●SS3 solenoid ●TOT sensor ●TSR circuit ●TSOD circuit ●TSD circuit ●TSL circuit ●TSS sensor
AOD-E Transmission	●Check transmission fluid level. ●Check transmission fluid for contamination. ●Check for transmission fluid leaks. ●Check transmission pressures. ●Check AOD-E connector for corrosion, bent pins or damage.	●SS1 solenoid ●SS2 solenoid ●OSS sensor ●MLPS sensor ●TOT sensor ●EPC solenoid
A4LD Transmission	●Check transmission fluid level. ●Check transmission fluid for contamination. ●Check for transmission fluid leaks. ●Check transmission pressures. ●Check A4LD connector for corrosion, bent pins, or damage.	●SS 3/4 solenoid
Other	●Inspect electrical connections, wires, and harnesses. ●Check shift linkage and adjustment. ●Check tire size and axle ratio. ●Check internal transmission components. ●Check for driveline modifications or aftermarket accessories.	●TP sensor ●MAP/BP sensor ●MAF sensor ●VSS sensor ●PSOM signal ●RPMS sensor ●ACT sensor ●4 x 4 L switch

Missing, Early, Late, Or No Shifts

System	Possible Causes	
	Visual/Mechanical	EEC-IV
E4OD Transmission	●Check transmission fluid level. ●Check transmission fluid for contamination. ●Check for transmission fluid leaks. ●Check transmission pressures. ●Check E4OD connector for corrosion, bent pins, or damage.	●OCS switch ●SS1 solenoid ●SS2 solenoid
AXOD-E Transmission	●Check transmission fluid level. ●Check transmission fluid for contamination. ●Check for transmission fluid leaks. ●Check transmission pressures. ●Check AXOD-E connector for corrosion, bent pins, or damage.	●SS3 solenoid ●MLPS sensor ●TSS sensor
4EAT Transmission (Integrated)	●Check transmission fluid level. ●Check transmission fluid for contamination. ●Check for transmission fluid leaks. ●Check transmission pressures. ●Check 4EAT connector for corrosion, bent pins, or damage.	●SS1 solenoid ●SS2 solenoid ●SS3 solenoid ●TSOD circuit ●TSS sensor
AOD-E Transmission	●Check transmission fluid level. ●Check transmission fluid for contamination. ●Check for transmission fluid leaks. ●Check transmission pressures. ●Check AXOD-E connector for corrosion, bent pins, or damage.	●SS1 solenoid ●SS2 solenoid ●OSS sensor ●MLPS sensor
A4LD Transmission	●Check transmission fluid level. ●Check transmission fluid for contamination. ●Check for transmission fluid leaks. ●Check transmission pressures. ●Check A4LD connector for corrosion, bent pins, or damage.	●SS 3/4 solenoid
Other	●Check shift linkage and adjustment. ●Inspect electrical connections, wires and harnesses.	●TP sensor ●VSS sensor ●PSOM signal ●RPMS sensor ●TFI, DIS or EDIS signals ●MAP/BP sensor ●MAF sensor

No Overdrive

System	Possible Causes	
	Visual/Mechanical	EEC-IV
Air/Vacuum	●Check vacuum lines for leaks or wear. ●Check air filter. ●Check air intake system.	●ISC solenoid ●MAP/BP sensor ●MAF sensor ●TP sensor ●ACT sensor
Fuel	●Check for correct fuel pressure. ●Check for fuel contamination/quality. ●Check fuel filter.	●HEGO sensor(s) ●Fuel Pump System: FP circuit FPM signal FP relay FPR solenoid ●Fuel Injection: INJ 1, 2 (EFI) INJ 1, 2 .. (SEFI) ●CANP solenoid
Ignition	●Check for correct base timing. ●Check distributor cap, adapter, and rotor. ●Inspect spark plugs and plug wires. ●Inspect TFI, DIS, or EDIS module for damage.	●Ignition System: CID signal
Power and Grounds	●Check for low battery voltage. ●Inspect electrical connections, wires, and harnesses.	●EEC-IV Power: VREF ●EEC-IV Grounds: SIG RTN
Other	●Check engine coolant level. ●Check thermostat for proper operation. ●Check EGR valve sticking. ●Check PCV valve for correct operation. ●Check for restricted exhaust. ●Check for worn camshaft lobes. ●Check camshaft timing and cylinder compression.	●ECT sensor ●EGR Systems: EGRT, EVP or PFE sensor EGR solenoid(s) ●A/C Systems: ACC, ACCS, WAC, ACD or ACON ●BLR switch ●DEF switch ●HDL switch ●NDS signal ●NGS/CES signal

Rough Idle

System	Possible Causes	
	Visual/Mechanical	EEC-IV
Air/Vacuum	●Check vacuum lines for leaks or wear. ●Check air intake system.	●ISC solenoid ●MAP/BP sensor ●MAF sensor ●TP sensor ●ACT sensor
Fuel	●Check for correct fuel pressure. ●Check for fuel contamination/quality. ●Check fuel filter.	●HEGO sensor(s) ●Fuel Pump System: FP circuit FPM signal FP relay ●FPR solenoid ●Fuel Injection: INJ 1, 2 (EFI) INJ 1, 2 .. (SEFI)
Ignition	●Check for correct base timing. ●Check distributor cap, adapter, and rotor. ●Inspect spark plugs and plug wires. ●Inspect TFI, DIS, or EDIS module for damage.	●Ignition System: PIP signal SPOUT signal CID signal VRS signal SAW signal
Power and Grounds	●Check for alternator/regulator noise interference. ●Inspect electrical connections, wires, and harnesses.	●EEC-IV Power: VREF ●EEC-IV Grounds: SIG RTN
Other	●Check engine coolant level. ●Check thermostat for proper operation. ●Check EGR valve sticking. ●Check PCV valve for correct operation. ●Check for restricted exhaust. ●Check camshaft timing and cylinder compression. ●Check for broken or weak valve springs.	●ECT sensor ●EGR Systems: EGRT, EVP or PFE sensor EGR solenoid(s) ●EPC solenoid ●CCC/MCCC solenoid

Runs Rough

System	Possible Causes	
	Visual/Mechanical	EEC-IV
Air/Vacuum	●Check vacuum lines for leaks or wear. ●Check air intake system.	●TP sensor ●MAP/BP sensor ●MAF sensor ●ACT sensor
Ignition	●Check for correct base timing. ●Check for wear or corrosion in distributor. ●Inspect TFI, DIS, or EDIS module for damage.	●Ignition System: PIP signal SPOUT signal VRS signal SAW signal
Fuel	●Check for correct fuel pressure. ●Check fuel lines for contamination or restrictions.	●HEGO sensor(s) ●Fuel Injection: INJ 1, 2 (EFI) INJ 1, 2 .. (SEFI) ●FPR solenoid
Other	●Check EGR valve sticking. ●Check PCV valve for correct operation. ●Check for restricted exhaust. ●Check engine coolant level. ●Check thermostat for proper operation. ●Inspect electrical connections, wires and harnesses. ●Check for partially binding brakes.	●EGR Systems: EGRT, EVP or PFE sensor EGR solenoid(s) ●KS sensor ●ECT sensor

Spark Knock

System	Possible Causes	
	Visual/Mechanical	EEC-IV
Air/Vacuum	●Check vacuum lines for leaks or wear. ●Check air intake system.	●TP sensor ●ISC solenoid ●MAP/BP sensor ●MAF sensor ●ACT sensor
Ignition	●Check distributor cap, adapter, and rotor. ●Inspect spark plugs and plug wires. ●Check ignition switch. ●Check ignition coil for voltage. ●Inspect TFI, DIS, or EDIS module for damage. ●Check for presence of anti-theft devices.	●Ignition System: PIP signal SPOUT signal IGN GND VRS signal SAW signal
Fuel	●Check for correct fuel pressure. ●Check Fuel Pump Inertia switch. ●Check for fuel contamination/quality. ●Check fuel filter. ●Check fuel lines for water, dirt, or rust. ●Check for low fuel level.	●HEGO sensor(s) ●Fuel Pump System: FP circuit FPM signal FP relay ●FPR solenoid ●Fuel Injection: INJ 1, 2 (EFI) INJ 1, 2, .. (SEFI)
Power and Grounds	●Check for low battery voltage. ●Inspect electrical connections, wires, and harnesses.	●EEC-IV Power: VREF VPWR/EEC-IV relay ●EEC-IV Grounds: SIG RTN PWR GND CSE GND
Other	●Check engine coolant level. ●Check thermostat for proper operation. ●Check EGR valve sticking. ●Check for moisture entry into EEC-IV processor. ●Check camshaft timing and cylinder compression. ●Check for restricted exhaust.	●ECT sensor ●EPC solenoid ●EGR Systems: EGRT, EVP or PFE sensor EGR solenoid(s) ●A/C Systems: ACC, ACCS, WAC, ACD or ACON ●CCC/MCCC solenoid ●BOO switch ●BLR switch ●DEF switch ●HDL switch ●MLPS sensor ●NDS signal ●NGS/CES signal

Stalls On Deceleration Or Quick Stop

System	Possible Causes	
	Visual/Mechanical	EEC-IV
Air/Vacuum	●Check vacuum lines for leaks or wear. ●Check air intake system.	●TP sensor ●MAP/BP sensor ●MAF sensor ●ISC solenoid
Fuel	●Check for correct fuel pressure. ●Check fuel lines for water contamination or restrictions.	●Fuel Injection: INJ 1, 2 (EFI) INJ 1, 2 .. (SEFI) ●FPR solenoid ●HEGO sensor
Ignition	●Check for correct base timing. ●Inspect TFI, DIS, or EDIS module for damage.	●Ignition System: PIP signal SPOUT signal SAW signal VRS signal
Other	●Check EGR valve sticking. ●Check PCV valve for correct operation. ●Check for restricted exhaust. ●Inspect electrical connections, wires, and harnesses. ●Check for low A/C refrigerant charge.	●EGR Systems: EGRT, EVP or PFE sensor EGR solenoid(s) ●CCC/MCCC solenoid ●A/C systems: ACC, ACCS, ACD, ACON or WAC ●MLPS sensor ●BOO switch

Surges

System	Possible Causes	
	Visual/Mechanical	EEC-IV
Ignition	●Check distributor cap, adapter, and rotor. ●Inspect spark plugs and plug wires. ●Check ignition switch. ●Check ignition coil for voltage. ●Inspect TFI, DIS, or EDIS module for damage. ●Check for presence of anti-theft devices.	●Ignition System: PIP signal SPOUT signal IGN GND VRS signal SAW signal
Fuel	●Check Fuel Pump Inertia switch. ●Check for fuel contamination/quality. ●Check fuel filter. ●Check for correct fuel pressure.	●Fuel Pump System: FP circuit FPM signal FP relay FPR solenoid ●Fuel Injection: INJ 1, 2 (EFI) INJ 1, 2 .. (SEFI)
Power and Grounds	●Check for low battery voltage. ●Inspect electrical connections, wires, and harnesses.	●EEC-IV Power: VREF VPWR/EEC-IV relay ●EEC-IV Grounds: SIG RTN PWR GND CSE GND
Air/Vacuum	●Check vacuum lines for leaks or wear. ●Check air intake system.	●TP sensor ●MAP/BP sensor ●MAF sensor ●ISC solenoid
Other	●Check engine coolant level. ●Check thermostat for proper operation. ●Check EGR valve stuck open. ●Check for moisture entry into EEC-IV processor. ●Check camshaft timing and cylinder compression. ●Check for throttle body contamination. ●Check for proper idle speed setting.	●ECT sensor ●EPC solenoid ●EGR Systems: EGRT, EVP or PFE sensor EGR solenoid(s) ●PSPS switch ●A/C Systems: ACC, ACCS, WAC, ACD or ACON ●CCC/MCCC solenoid ●BLR switch ●DEF switch ●HDL switch ●NDS signal ●NGS/CES signal

Vehicle Stalls

System	Possible Causes	
	Visual / Mechanical	EEC-IV
Fuel	•Check fuel pump inertia switch. •Check for fuel contamination / quality. •Check fuel filter. •Check fuel level / gauge operation. •Check for restricted fuel lines. •Check for correct fuel pressure.	•Fuel Pump System: FP signal FPM circuit FP relay FPR Solenoid •Fuel Injection: INJ 1, 2 (EFI) INJ 1, 2, .. (SEFI)
Ignition	•Check distributor cap, adapter, and rotor. •Inspect spark plugs and plug wires. •Check ignition switch. •Check ignition coil for voltage. •Inspect TFI, DIS, or EDIS module for damage. •Check for presence of anti-theft devices.	•Ignition System: PIP signal SPOUT signal IGN GND VRS signal SAW signal
Power and Grounds	•Check for low battery voltage. •Check starter and starter circuit for voltage. •Inspect electrical connections, wires, and harnesses.	•EEC-IV power: VREF VPWR / EEC-IV relay •EEC-IV grounds: SIG RTN PWR GND CSE GND
Air / Vacuum	•Check vacuum lines for leaks or wear. •Check air intake system.	•TP sensor •MAP / BP sensor •MAF sensor •ISC solenoid
Other	•Check engine coolant level. •Check thermostat for proper operation. •Check EGR valve stuck open. •Check for moisture entry into EEC-IV processor. •Check camshaft timing and cylinder compression. •Check for restricted exhaust. •Neutral / Clutch safety switch.	•ECT sensor

Vehicle Won't Start

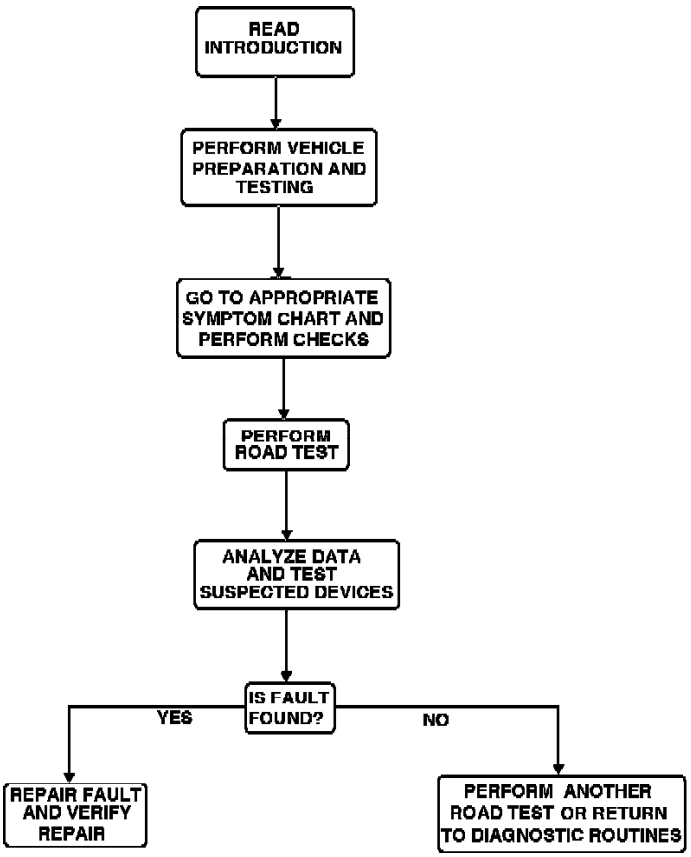

Diagnostic Flowchart

EEC-IV Monitor Measurement Methods

CHANGE CONDITION TO CAUSE RESPONSE BY INPUT

Purpose: To verify the sensor receives and responds to changes.
1. Key ON engine OFF/RUNNING; AUTO or DCV mode.
2. Select sensor on pin selector "A".
3. Create a condition or change a condition.
4. Observe the change in sensor value. Verify the change with the appropriate graph or chart. (Refer to GRAPHS AND CHARTS).

Examples: Move the throttle, watch the Throttle Position **(TP)** and Manifold Absolute Pressure **(MAP)** sensor values. Warm up the engine, watch the Air Charge Temperature **(ACT)** and Engine Coolant Temperature **(ECT)** values decrease. Depress the brake pedal, watch the BOO light.

CHANGE CONDITION AND VERIFY OUTPUT RESPONSE.

Purpose: To verify EEC-IV module and actuator circuit responds to sensor input.
1. Key ON engine OFF/RUNNING; AUTO or DCV mode.
2. Select actuator on pin selector "A" or "B".
3. Create a change for the input device with the switch box or vehicle operation.
4. Observe the change in the actuator signal and observe the light.

Examples: Increase throttle position (accelerate), observe SPOUT increase. Move Exhaust Gas Oxygen **(EGO)** switch to lean, observe SPOUT increase.

CHECK VALUE

Purpose: To verify the correct value for a device or signal.
1. Key ON engine OFF/RUNNING; AUTO or DCV mode.
2. Select signal from pin selector "A" or "B".
3. Since various units are used, refer to meter function light.

CLICK TESTING (RELAYS/SOLENOIDS)

Purpose: Activate solenoid or relay from monitor and observe device.
1. Key ON engine OFF; AUTO or DCV mode.
2. Select the relay or solenoid signal on pin selector "A" and correct ground on reference pin selector.
3. Insert switchbox into selector pin jacks.
4. Push the small red button to turn ON relay or solenoid.
5. Listen for a click and observe the signal light for illumination.

COIL RESISTANCE (SOLENOIDS/RELAYS

Purpose:
1. Key OFF; Ohms mode.
2. Select signal from pin selector "A".
3. Select correct ground from reference pin selector.
4. Select ohms range switch.
5. Wiggle test light will illuminate and the speaker will sound. Press the wiggle test reset button.
6. Manual test light should be blinking, value in ohms units.

EEC-IV INPUT CHECK (STO)

Purpose: Confirm that the Engine Control Assembly **(ECA)** sets CHECK ENGINE LIGHT for certain EEC-IV sensors.
1. Key ON engine OFF; DCV mode.
2. Select sensor from pin selector "A".
3. Set reference pin selector to signal return (sig Rtn).
4. Insert switchbox into selector pin jacks.
5. Move the AIM switch to key ON engine OFF position.
6. Push the small red button on switch box and observe STO light turn ON and speaker sound while the button is pressed.
7. Return the AIM switch to the OFF position.

HARNESS OPENS

Purpose: Check harness for open circuits.
1. Key ON engine OFF; ohms mode.
2. Select signal from pin selector "A".
3. Disconnect the sensor/actuator where the signal is to be checked.
4. Connect a jumper wire from reference pin jack (black) to signal pin on harness to be tested.
5. Check for continuity.

HARNESS SHORTS

Purpose: Check harness for short to ground or power.
1. Key OFF; ohms mode.

2. Select signal from pin selector "A".
3. Set ohms range switch to 200K.
4. Disconnect the sensor/actuator to be tested.
5. Disconnect the EEC-IV processor, then reconnect monitor to EEC-IV harness (optional).
6. Select various power or ground signals from reference pin selector. Example: reference voltage **(VREF)**, signal return **(SIG RTN)**, power ground **(PWR GND)**.
7. Read resistance: 10K or less indicates a short, higher than 10K indicates no short.

OUTPUT STATE CHECK (SOLENOIDS/RELAYS)

Purpose: Exercise actuator devices after key ON engine OFF self test.

1. Key On Engine OFF; AUTO or DCV mode.
2. Move AIM switch to key ON engine ON position and wait for output codes (beeps) to end.
3. Completely depress and release the throttle. Observe the signal light turn ON.
4. Completely depress and release the throttle. Observe the signal light turn OFF.
5. Return AIM switch to OFF position.

WIGGLE TESTING (DCV OR OHMS)

Purpose: Sensitive DCV or ohms testing for intermittent harness or device.

1. Key OFF for ohms wiggle; key ON engine OFF/RUNNING for DCV wiggle.
2. Use DCV wiggle for all actuators, power and grounded signals, all sensors which use DCV units in AUTO mode; all others use ohms wiggle. Examples: ohms wiggle MAP, PIP, INJ; DCV wiggle - TP, ECT, EVR. DCV wiggle is more sensitive than the ohms wiggle test.
3. Select the proper signal from pin selector "A".
4. Select the correct ground from reference pin selector.
5. Tap components, wiggle and flex the harness and connectors.
6. The wiggle and test light will activate when a change is sensed.

OTHER DIAGNOSTIC TOOLS

If needed, there are other specialized tools that could aid in diagnosis. The Intermittent Ignition Analyzer (007-00035) can be used for TFI-IV systems. If a DIS or EDIS ignition is present, special diagnostic tools are necessary. Another useful tool is the Fuel Testing Kit (113-00004) used in checking the presence of contaminated fuel.

The Diagnostic Routine section lists various symptoms and references possible systems and components.

VERIFICATION

After the vehicle has been located and serviced, a verification test needs to be performed. This may require a road test to verify that the symptom is no longer present. It is also important to remember that if any continuous memory codes were present before the symptom was serviced, those codes must be cleared.

Introduction

The Electronic Engine Control **(EEC-IV)** monitor and EEC-IV recorder are useful tools for diagnosing intermittent driveability problems which are not repairable by the normal diagnostic routines. Although this section provides diagnostic procedures and data to be used with the monitor and recorder in a symptom oriented manner, there are several graphs, charts, and tables located under **DIAGNOSTIC REFERENCE VALUES** and **GRAPHS AND CHARTS** that are useful without the monitor.

By definition, intermittent is a randomly occurring symptom that sets no hard codes. Often the quick test results in a pass, while the symptom remains. Other results, such as continuous codes, will also be covered in this section.

Before proceding with the procedures in this section, be sure that:

- Customary mechanical system tests and inspections reveal nothing. Remember that a mechanical problem can cause unpredictable results from a good EEC-IV system.
- A quick test and related pinpoint tests have been successfully completed, but the problem still remains.
- A review of the Technical Service Bulletin **(TSB)** section reveals no applicable article. (If applicable articles are found, perform the actions in the article prior to proceding with tests in this section).

The monitor and recorder function as a window into the EEC-IV system. Through this window the operator is able to view the same sensor values and signals as the Engine Control Assembly **(ECA)**. The ECA uses these values to make decisions which increase performance and decrease emissions. The monitor can display these values during both key ON engine OFF and engine RUNNING conditions. The advantage of the recorder is the ability to take a "snapshot" of selected EEC-IV signals that can be stored and retrieved later.

The diagnostic procedures used in this section is a symptom based approach for isolating the faulty system, circuit, or component. Often a mechanical fault will cause a good EEC-IV system to react abnormally. In such cases, the use of a monitor will enhance the ability to eliminate possible EEC-IV faults and also locate mechanical faults.

TEST STEP	RESULT ▶	ACTION TO TAKE
STEP 1 VISUAL CHECK • Check vacuum hoses for damage and proper connections. • Check EEC-IV system wiring harness for proper connections. **NOTE: If additional information is required on Visual Check, refer** to TESTING PROCEDURES/QUICK TEST AND DIAGNOSTIC AIDS/DETAILED QUICK TEST PROCEDURES/VISUAL INSPECTION. • **Are all visual checks OK?**	Yes ▶ No ▶	GO to Step 2 . SERVICE as necessary.
STEP 2 VEHICLE PREPARATION • Apply parking brake. • Place shift lever firmly in PARK (NEUTRAL for manual transmissions). • Block drive wheels. • Turn off all electrical loads. • Start engine and run until at operating temperature. **NOTE: If additional information is required for Vehicle Preparation, refer to** TESTING PROCEDURES/QUICK TEST AND DIAGNOSTIC AIDS/DETAILED QUICK TEST PROCEDURES/VISUAL INSPECTION. • **Is vehicle prepared for Equipment Set-up?**	Yes ▶ No ▶	GO to Step 3 . REPEAT Step 2 . **NOTE: If engine does not start or stalls after starting, continue to Step 3 .**
STEP 3 EQUIPMENT SET-UP • Perform KOEO Self-Test and check for Continuous Memory Codes. These codes must be recorded before disconnecting the EEC-IV harness, otherwise they could be erased. (Refer to TESTING PROCEDURES/QUICK TEST AND DIAGNOSTIC AIDS/DETAILED QUICK TEST PROCEDURES/KEY ON IGNITION OFF SELF TEST for quick test procedures). • Key off. • Install Monitor using 10mm wrench or nutdriver. Refer to installation procedure in Monitor Manuals, if needed. • Select proper Monitor overlay card for the appropriate engine. • If a Recorder is available, do not install at this time. • **Is Monitor installed and the connecting cable safely routed away from moving parts and ignition components?**	Yes ▶ No ▶	Proceed with Step 4 Power and Ground Checks. REPEAT Step 3 .

Visual Inspection, Vehicle Preparation, & Equipment Setup

TEST STEP	RESULT ▶	ACTION TO TAKE
STEP 4 POWER CHECK		
• Key off, Monitor power switch Off. • **Is KAPWR (pin 1) green light on?**	Yes ▶ No ▶	GO to Step 5 . REPAIR battery or KAPWR circuit.
STEP 5 MONITOR PRELIMINARY CHECKS		
• Key off, Monitor power switch on. • Perform the following tests to ensure the Monitor is functional: — Light Test — Move Monitor lamp switch to on. • **Are all panel lamps lit (including 6 lamps in remote display) and does audible beep sound?** — Remote Display Test. Push button on remote display unit. • **Does it read – 1888?** **NOTE: Temperature extremes will affect remote display unit. Above 150°F, a black display will result; at cold temperatures the display will run slow.** • **Are all tests OK?**	Yes ▶ No ▶	GO to Step 6 . Monitor needs to be repaired. REFER to address posted on lid of Monitor.
STEP 6 EEC-IV POWER CHECKS		
• Key on, engine off. • Monitor ON, AUTO mode. • Check the following power signals for the correct value. Refer to Chart 1 - EEC-IV Power Signals. • **Are all power signals at the correct values?**	Yes ▶ No ▶	GO to Step 7 . REPAIR harness connector or other possible faults listed in Chart 1.

Chart # 1
EEC-IV Power Signals

Signal	Value	Possible Fault Location
KAPWR	>10.5v	EEC-IV harness pin 1, vehicle battery.
VPWR	>10.5v	EEC-IV harness pin 37/57, power relay or IRCM, vehicle battery, ignition switch, battery cables.
VREF	4.5 – 5.5v	EEC-IV harness pin 26, EEC-IV processor.

Monitor And EEC-IV Power And Ground Check

TEST STEP	RESULT ▶	ACTION TO TAKE
STEP 7 EEC-IV GROUND CHECKS • Key on, engine off. • Monitor ON, AUTO mode. • Check the following ground signals for the correct value. Refer to Chart 2 - EEC-IV Ground Signals. • **Are all ground signals at the correct values?**	Yes ▶ No ▶	GO to SYMPTOM CHARTS REPAIR harness, connector or other possible faults listed in Chart 2.

Chart # 2
EEC-IV Ground Signals

SIGNAL	Value	Possible Fault Location
CSE GND	0 ± .5v	EEC-IV harness Pin 20, processor ground strap if applicable.
IGN GND	0 ± .5v	EEC-IV harness Pin 16, TFI-IV, DIS or EDIS ignition systems.
PWR GND*	0 ± .3v	EEC-IV harness Pin 40/60, vehicle battery.
SIG RTN	0 ± .5v	EEC-IV harness Pin 46, EEC-IV processor.
HEGO GND (opt)	0 ± .5v	EEC-IV harness Pin 49, HEGO sensor.
MAF RTN (opt)	0 ± .5v	EEC-IV harness Pin 9 or 15, MAF sensor, EEC-IV processor.

***NOTE: To measure PWR GND select PWR GND on "Reference Pin Selector" and IGN GND on 'Pin Selector A'. Set "Function" switch to "Manual DCV".**

Monitor And EEC-IV Power And Ground Check

Road Test

RECREATING THE SYMPTOM

In order to diagnose driveability problems, the technician must collect data on how the Electronic Engine Control **(EEC-IV)** system is sensing and reacting. After a thorough mechanical/visual inspection is completed, the EEC-IV portion of the Symptom Chart is diagnosed. Through the use of a monitor and a recorder, these signals can be inspected for shorts, opens, component failures, or erratic behavior. Also, the data received from the monitor and recorder can reveal the presence of mechanical problems.

PREPARATION

1. Place monitor (and recorder, if installed) in a convenient location inside the vehicle. Secure the cables away from any moving engine parts.
2. Place the proper overlay card on the monitor.
3. Copy list of EEC-IV sensors and actuators listed in the appropriate Symptom Chart. These signals will be monitored during the road test.
4. If a recorder is used, select the first 8 signals listed to channels 1-8 (one signal per channel). Connect the jumpers from the Input/Output **(I/O)** jacks to the appropriate channels.
5. Select the proper Diagnostic Reference Value Sheet. This sheet lists EEC-IV sensor and actuator values at various operating conditions. **NOTE:** The values given on these sheets are only approximations.
6. In order to safely perform a road test, it is necessary that a second person accompany the driver. The second person can select signals, observe changes, and record notes.

USE OF PERIPHERAL INPUTS

Some useful signals listed in the Symptom Chart may require the use of certain peripheral (auxiliary) devices. These devices can be inserted into the AUX jacks of the monitor or the ADAPT 1/ADAPT 2 input jacks of the recorder.

REMINDERS

The purpose of the road test is to recreate the driveability problem by duplicating the conditions that caused it. The road test is a suggested but optional part of this section. It is important that the road test be performed safely. Use the provided seat belts and operate the vehicle in a safe manner, obeying all traffic rules and regulations.

OBSERVATIONS

During the road test various EEC-IV signals are chosen and their values shown. Also, the following observations can be made as the road test is performed:

- EEC-IV Values -- Compare road test values at various operating conditions with those listed in Diagnostic Reference Values. Refer to

DIAGNOSTIC REFERENCE VALUES for more details.

- Monitor Lights -- Observation of the monitor lights give quick information about the condition of many EEC-IV signals. For example, these lights can quickly reveal the status of many signals, telling the technician whether an output should be energized or not. Optional signals are printed in yellow labels.
- Wiggle Tests -- By using the wiggle test mode during key ON engine RUNNING tests, often an intermittent device or wire will trigger the alarm. The Direct Current Voltage **(DCV)** wiggle mode in particular is very sensitive to sudden, erratic changes in an EEC-IV harness or component.

ROAD TEST PROCEDURE

1. Using the appropriate Symptom Chart, select the first listed EEC-IV device on monitor pin selector "A".
2. Turn ON the monitor (and recorder, if used). START and drive the vehicle.
3. If the recorder is installed, put the function switch in RECORD mode and and press the start record button.
4. Drive the vehicle, creating conditions associated with the driveability problem.
5. When the symptom occurs, the passenger should observe changes in the selected EEC-IV signal. Information should be recorded onto paper with other notes about the symptom, device, or operating conditions. If the recorder is used the capture button should be pressed.
6. Record information about the symptom, operating condition, and EEC-IV signal values received from the monitor (or recorder in playback mode).
7. If necessary, select other EEC-IV signals from the Symptom Chart and attempt to recreate the problem again. Observe and record the results. Go to ANALYZING DATA to interpret the data received from the road test.

TEST STEP		RESULT ▶	ACTION TO TAKE
1-1	CHECK BATTERY VOLTAGE		
	• check the battery. • **Is the battery OK?**	Yes ▶ No ▶	GO to 1-2. SERVICE as necessary.
1-2	CHECK STARTING CIRCUIT		
	• check the starting circuit. • **Is the starting circuit OK?**	Yes ▶ No ▶	GO to 1-3. SERVICE as necessary.
1-3	CHECK STARTER MOTOR		
	• check the starter motor. • **Is the starter motor OK?**	Yes ▶ No ▶	GO to 1-4. SERVICE as necessary.
1-4	CHECK BASIC ENGINE		
	• check for damaged flywheel or seized engine components. • **Is the engine OK?**	Yes ▶ No ▶	RETURN to the Diagnostic Routine Index and CHECK for other concerns. SERVICE as necessary.

Routine 1 - No Crank

NOTE: It is a good practice to confirm that the correct starting procedure was being used by the customer before proceeding with diagnosis.

TEST STEP		RESULT ▶	ACTION TO TAKE
2-1	CHECK VACUUM DISTRIBUTION		
	• Check the vacuum distribution system for leaks. • **Is the vacuum distribution system OK?**	Yes ▶ No ▶	GO to 2-2. SERVICE as necessary.
2-2	PERFORM EEC QUICK TEST		
	• perform the EEC Quick Test. • **Are diagnostic trouble codes obtained or are any other conditions noticed?**	Yes ▶ No ▶	SERVICE as necessary. GO to 2-3.
2-3	CHECK IGNITION SYSTEM		
	• perform the ignition system diagnostic procedures. • **Is the ignition system OK?**	Yes ▶ No ▶	GO to 2-4. SERVICE as necessary.
2-4	CHECK FUEL DELIVERY SYSTEM		
	• perform the fuel delivery system diagnostic procedures. • **Is the fuel delivery system OK?**	Yes ▶ No ▶	GO to 2-5. SERVICE as necessary.
2-5	CHECK AIR INTAKE SYSTEM		
	• perform the air intake system and the Bypass Air (BPA) control system diagnostic procedures. • **Are the air intake system and the Bypass Air (BPA) control system OK?**	Yes (2.0L and 2.5L) ▶ Yes (All others) ▶ No ▶	GO to 2-6. GO to 2-7. SERVICE as necessary.
2-6	CHECK EXHAUST GAS RECIRCULATION (EGR) SYSTEM		
	• perform the Exhaust Gas Recirculation (EGR) system diagnostic procedures. • **Is the EGR system OK?**	Yes ▶ No ▶	GO to 2-7. SERVICE as necessary.
2-7	CHECK COOLING FAN SYSTEM (HOT START CONCERN ONLY)		
	• check the cooling fan system. • **Is the cooling fan system OK?**	Yes ▶ No ▶	GO to 2-8. SERVICE as necessary.

Routine 2 - Hard Start/Long Crank (Part 1)

TEST STEP		RESULT ▶	ACTION TO TAKE
2-8	CHECK BASIC ENGINE		
	• check the engine compression. • check camshaft, valve train, and timing belt condition. • **Is the basic engine OK?**	Yes ▶ No ▶	RETURN to the Diagnostic Routine Index and CHECK for other concerns. SERVICE as necessary.

Routine 2 - Hard Start/Long Crank (Part 2)

	TEST STEP	RESULT ▶	ACTION TO TAKE
3-1	CHECK VACUUM DISTRIBUTION		
	• Check the vacuum distribution system for leaks. • **Is the vacuum distribution system OK?**	Yes ▶ No ▶	GO to 3-2. SERVICE as necessary.
3-2	PERFORM EEC QUICK TEST		
	• perform the EEC Quick Test. • **Are diagnostic trouble codes obtained or are any other conditions noticed?**	Yes ▶ No ▶	SERVICE as necessary. GO to 3-3.
3-3	CHECK AIR INTAKE SYSTEM		
	• perform the air intake system and the Bypass Air (BPA) control system diagnostic procedures. • **Are the air intake system and the Bypass Air (BPA) control system OK?**	Yes ▶ No ▶	GO to 3-4. SERVICE as necessary.
3-4	CHECK FUEL DELIVERY SYSTEM		
	• perform the fuel delivery system diagnostic procedures. • **Is the fuel delivery system OK?**	Yes (2.0L and 2.5L) ▶ Yes (1.6L Turbo) ▶ Yes (All others) ▶ No ▶	GO to 3-5. GO to 3-6. GO to 3-7. SERVICE as necessary.
3-5	CHECK EXHAUST GAS RECIRCULATION (EGR) SYSTEM		
	• perform the Exhaust Gas Recirculation (EGR) system diagnostic procedures. • **Is the EGR system OK?**	Yes ▶ No ▶	GO to 3-7. SERVICE as necessary.
3-6	CHECK TURBOCHARGER SYSTEM		
	• perform the turbocharger system diagnostic procedures. • **Is the turbocharger system OK?**	Yes ▶ No ▶	GO to 3-7. SERVICE as necessary.

Routine 3 - Stall After Start, Stalls/Quits (Part 1)

	TEST STEP	RESULT ▶	ACTION TO TAKE
3-7	CHECK POSITIVE CRANKCASE VENTILATION (PCV) SYSTEM		
	• perform the Positive Crankcase Ventilation (PCV) system diagnostic procedures. • **Is the PCV system OK?**	Yes ▶ No ▶	GO to 3-8. SERVICE as necessary.
3-8	CHECK EVAPORATIVE EMISSION (EVAP) SYSTEM		
	• perform the Evaporative Emission (EVAP) system diagnostic procedures. • **Is the EVAP system OK?**	Yes ▶ No ▶	GO to 3-9. SERVICE as necessary.
3-9	CHECK BASIC ENGINE		
	• check engine compression. • check camshaft, valve train, and timing belt condition. • **Is the basic engine system OK?**	Yes ▶ No ▶	GO to 3-10. SERVICE as necessary.
3-10	CHECK IGNITION SYSTEM		
	• perform the ignition system diagnostic procedures. • **Is the ignition system OK?**	Yes ▶ No ▶	RETURN to the Diagnostic Routine Index and CHECK for other concerns. SERVICE as necessary.

Routine 3 - Stall After Start, Stalls/Quits (Part 2)

NOTE: Extended cranking due to a "NO START" condition can load the exhaust system with raw fuel and ruin the three way catalytic converter after the engine starts. After the "NO START" condition has been repaired, disconnect the injectors and crank the engine until surplus fuel is purged, as evidenced by the absence of fuel odor in the exhaust.

TEST STEP		RESULT ▶	ACTION TO TAKE
4-1	PERFORM EEC QUICK TEST		
	• perform the EEC Quick Test. • **Are diagnostic trouble codes obtained or are any other conditions noticed?**	Yes ▶ No ▶	SERVICE as necessary. GO to 4-2.
4-2	CHECK IGNITION SYSTEM		
	• perform the ignition system diagnostic procedures. • **Is the ignition system OK?**	Yes ▶ No ▶	GO to 4-3. SERVICE as necessary.
4-3	CHECK BASIC ENGINE		
	• check engine compression. • check camshaft, valve train, and timing belt condition. • **Is the basic engine OK?**	Yes ▶ No ▶	GO to 4-4. SERVICE as necessary.
4-4	CHECK AIR INTAKE SYSTEM		
	• perform the air intake system and the Bypass Air (BPA) control system diagnostic procedures. • **Are the air intake system and the Bypass Air (BPA) control system OK?**	Yes (2.0L and 2.5L) ▶ Yes (1.6L Turbo) ▶ Yes (All others) ▶ No ▶	GO to 4-5. GO to 4-6. GO to 4-7. SERVICE as necessary.
4-5	CHECK EXHAUST GAS RECIRCULATION (EGR) SYSTEM		
	• perform the Exhaust Gas Recirculation (EGR) system diagnostic procedures. • **Is the EGR system OK?**	Yes ▶ No ▶	GO to 4-7. SERVICE as necessary.
4-6	CHECK TURBOCHARGER SYSTEM		
	• perform the turbocharger system diagnostic procedures. • **Is the turbocharger system OK?**	Yes ▶ No ▶	GO to 4-7. SERVICE as necessary.

Routine 4 - No Start/Normal Crank (Part 1)

TEST STEP		RESULT ▶	ACTION TO TAKE
4-7	CHECK FUEL DELIVERY SYSTEM		
	• perform the fuel delivery system diagnostic procedures. • **Is the fuel delivery system OK?**	Yes ▶ No ▶	RETURN to the Diagnostic Routine Index and CHECK for other concerns. SERVICE as necessary.

Routine 4 - No Start/Normal Crank (Part 2)

	TEST STEP	RESULT ▶	ACTION TO TAKE
5-1	PERFORM EEC QUICK TEST		
	• perform the EEC Quick Test.	Yes ▶	SERVICE as necessary.
	• **Are diagnostic trouble codes obtained or are any other conditions noticed?**	No ▶	GO to 5-2.
5-2	CHECK FUEL DELIVERY SYSTEM		
	• perform the fuel delivery system diagnostic procedures. • **Is the fuel delivery system OK?**	Yes ▶ No ▶	GO to 5-3. SERVICE as necessary.
5-3	CHECK VACUUM DISTRIBUTION		
	• Check the vacuum distribution system for leaks. • **Is the vacuum distribution system OK?**	Yes ▶ No ▶	GO to 5-4. SERVICE as necessary.
5-4	CHECK AIR INTAKE SYSTEM		
	• perform the air intake system and the Bypass Air (BPA) control system diagnostic procedures. • **Are the air intake system and the Bypass Air (BPA) control system OK?**	Yes ▶ No ▶	RETURN to the Diagnostic Routine Index and CHECK for other concerns. SERVICE as necessary.

Routine 5 - Slow Return To Idle

	TEST STEP	RESULT ▶	ACTION TO TAKE
6-1	CHECK VACUUM DISTRIBUTION		
	• Check the vacuum distribution system for leaks. • **Is the vacuum distribution system OK?**	Yes ▶ No ▶	GO to 6-2. SERVICE as necessary.
6-2	CHECK AIR INTAKE SYSTEM		
	• perform the air intake system and the Bypass Air (BPA) control system diagnostic procedures. • **Are the air intake system and the Bypass Air (BPA) control system OK?**	Yes ▶ No ▶	GO to 6-3. SERVICE as necessary.
6-3	CHECK IGNITION SYSTEM		
	• perform the ignition system diagnostic procedures. • **Is the ignition system OK?**	Yes ▶ No ▶	GO to 6-4. SERVICE as necessary.
6-4	CHECK FUEL DELIVERY SYSTEM		
	• perform the fuel delivery system diagnostic procedures. • **Is the fuel delivery system OK?**	Yes ▶ No ▶	GO to 6-5. SERVICE as necessary.
6-5	PERFORM EEC QUICK TEST		
	• perform the EEC Quick Test.	Yes ▶	SERVICE as necessary.
	• **Are diagnostic trouble codes obtained or are any other conditions noticed?**	No (2.0L and 2.5L) ▶ No (All others) ▶	GO to 6-6. GO to 6-7.
6-6	CHECK EXHAUST GAS RECIRCULATION (EGR) SYSTEM		
	• perform the Exhaust Gas Recirculation (EGR) system diagnostic procedures. • **Is the EGR system OK?**	Yes ▶ No ▶	GO to 6-7. SERVICE as necessary.

Routine 6 - Rolling Idle, Runs Rough, Misses (Part 1)

TEST STEP		RESULT ▶	ACTION TO TAKE
6-7	CHECK POSITIVE CRANKCASE VENTILATION (PCV) SYSTEM		
	• perform the Positive Crankcase Ventilation (PCV) system diagnostic procedures. • **Is the PCV system OK?**	Yes (1.6L Turbo) ▶ Yes (All others) ▶ No ▶	GO to 6-8. GO to 6-9. SERVICE as necessary.
6-8	CHECK TURBOCHARGER SYSTEM		
	• perform the turbocharger system diagnostic procedures. • **Is the turbocharger system OK?**	Yes ▶ No ▶	GO to 6-9. SERVICE as necessary.
6-9	CHECK BASIC ENGINE		
	• check engine compression. • check camshaft, valve train, and timing belt condition. • **Is the basic engine OK?**	Yes ▶ No ▶	RETURN to the Diagnostic Routine Index and CHECK for other concerns. SERVICE as necessary.

Routine 6 - Rolling Idle, Runs Rough, Misses (Part 2)

TEST STEP		RESULT ▶	ACTION TO TAKE
7-1	CHECK AIR INTAKE SYSTEM		
	• perform the air intake system diagnostic procedures. • **Is the air intake system OK?**	Yes ▶ No ▶	GO to 7-2. SERVICE as necessary.
7-2	CHECK VACUUM DISTRIBUTION		
	• Check the vacuum distribution system for leaks. • **Is the vacuum distribution system OK?**	Yes ▶ No ▶	GO to 7-3. SERVICE as necessary.
7-3	PERFORM EEC QUICK TEST		
	• perform the EEC Quick Test. • **Are diagnostic trouble codes obtained or are any other conditions noticed?**	Yes ▶ No ▶	SERVICE as necessary. GO to 7-4.
7-4	CHECK COOLING SYSTEM		
	• check the cooling system. • **Is the cooling system OK?**	Yes (Vehicle has air-conditioning) ▶ Yes (Vehicle does not have air-conditioning) ▶ No ▶	GO to 7-5. RETURN to the Diagnostic Routine Index and CHECK for other concerns. SERVICE as necessary.
7-5	CHECK AIR-CONDITIONING SYSTEM		
	• check the air-conditioning system. • **Is the air-conditioning system OK?**	Yes ▶ No ▶	RETURN to the Diagnostic Routine Index and CHECK for other concerns. SERVICE as necessary.

Routine 7 - Fast Idle, Diesels/Runs On

TEST STEP		RESULT ▶	ACTION TO TAKE
8-1	CHECK AIR INTAKE SYSTEM		
	• perform the air intake system and the Bypass Air (BPA) control system diagnostic procedures. • **Are the air intake system and the Bypass Air (BPA) control system OK?**	Yes ▶ No ▶	GO to 8-2. SERVICE as required.
8-2	CHECK FUEL DELIVERY SYSTEM		
	• perform the fuel delivery system diagnostic procedures. • **Is the fuel delivery system OK?**	Yes ▶ No ▶	GO to 8-3. SERVICE as required.
8-3	PERFORM EEC QUICK TEST		
	• perform the EEC Quick Test. • **Are diagnostic trouble codes obtained or are any other conditions noticed?**	Yes ▶ No (2.0L and 2.5L) ▶ No (All others) ▶	SERVICE as necessary. GO to 8-4. RETURN to the Diagnostic Routine Index and CHECK for other concerns.
8-4	CHECK EXHAUST GAS RECIRCULATION (EGR) SYSTEM		
	• perform the Exhaust Gas Recirculation (EGR) system diagnostic procedures. • **Is the EGR system OK?**	Yes ▶ No ▶	RETURN to the Diagnostic Routine Index and CHECK for other concerns. SERVICE as necessary.

Routine 8 - Low/Slow Idle, Stalls/Quits

TEST STEP		RESULT ▶	ACTION TO TAKE
9-1	CHECK BYPASS AIR (BPA) CONTROL SYSTEM		
	• perform the Bypass Air (BPA) control system diagnostic procedures. • **Is the BPA control system OK?**	Yes ▶ No ▶	GO to 9-2. SERVICE as necessary.
9-2	PERFORM EEC QUICK TEST		
	• perform the EEC Quick Test. • **Are diagnostic trouble codes obtained or are any other conditions noticed?**	Yes ▶ No ▶	SERVICE as necessary. GO to 9-3.
9-3	CHECK IGNITION SYSTEM		
	• perform the ignition system diagnostic procedures. • **Is the ignition system OK?**	Yes ▶ No ▶	GO to 9-4. SERVICE as necessary.
9-4	CHECK FUEL DELIVERY SYSTEM		
	• perform the fuel delivery system diagnostic procedures. • **Is the fuel delivery system OK?**	Yes ▶ No ▶	GO to 9-5. SERVICE as necessary.
9-5	CHECK AIR INTAKE SYSTEM		
	• perform the air intake system diagnostic procedures. • **Is the air intake system OK?**	Yes (2.0L and 2.5L) ▶ Yes (1.6L Turbo) ▶ Yes (All others) ▶ No ▶	GO to 9-6. GO to 9-7. GO to 9-8. SERVICE as necessary.

Routine 9 - Stalls/Quits, Buck/Jerk, Hesitation (Part 1)

TEST STEP		RESULT ▶	ACTION TO TAKE
9-6	CHECK EXHAUST GAS RECIRCULATION (EGR) SYSTEM		
	• perform the Exhaust Gas Recirculation (EGR) system diagnostic procedures. • **Is the EGR system OK?**	Yes ▶ No ▶	GO to 9-8. SERVICE as necessary.
9-7	CHECK TURBOCHARGER SYSTEM		
	• perform the turbocharger system diagnostic procedures. • **Is the turbocharger system OK?**	Yes ▶ No ▶	GO to 9-8. SERVICE as necessary.
9-8	CHECK BASIC ENGINE		
	• check camshaft, valve train, and timing belt condition. • **Is the basic engine OK?**	Yes ▶ No ▶	GO to 9-9. SERVICE as necessary.
9-9	CHECK EXHAUST SYSTEM		
	• perform the exhaust system diagnostic procedures. • **Is the exhaust system free of restrictions?**	Yes ▶ No ▶	RETURN to the Diagnostic Routine Index and CHECK for other concerns. SERVICE as necessary.

Routine 9 - Stalls/Quits, Buck/Jerk, Hesitation (Part 2)

TEST STEP		RESULT ▶	ACTION TO TAKE
10-1	CHECK IGNITION SYSTEM		
	• perform the ignition system diagnostic procedures. • **Is the ignition system OK?**	Yes ▶ No ▶	GO to 10-2. SERVICE as necessary.
10-2	PERFORM EEC QUICK TEST		
	• perform the EEC Quick Test. • **Are diagnostic trouble codes obtained or are any other conditions noticed?**	Yes ▶ No ▶	SERVICE as necessary. GO to 10-3.
10-3	CHECK FUEL DELIVERY SYSTEM		
	• perform the fuel delivery system diagnostic procedures. • **Is the fuel delivery system OK?**	Yes ▶ No ▶	GO to 10-4. SERVICE as necessary.
10-4	CHECK BYPASS AIR (BPA) CONTROL SYSTEM		
	• perform the Bypass Air (BPA) control system diagnostic procedures. • **Is the BPA control system OK?**	Yes (2.0L and 2.5L) ▶ Yes (All others) ▶ No ▶	GO to 10-5. RETURN to the Diagnostic Routine Index and CHECK for other concerns. SERVICE as necessary.
10-5	CHECK EXHAUST GAS RECIRCULATION (EGR) SYSTEM		
	• perform the Exhaust Gas Recirculation (EGR) system diagnostic procedures. • **Is the EGR system OK?**	Yes ▶ No ▶	RETURN to the Diagnostic Routine Index and CHECK for other concerns. SERVICE as necessary.

Routine 10 - Runs Rough, Misses

TEST STEP		RESULT ▶	ACTION TO TAKE
11-1	CHECK VACUUM DISTRIBUTION		
	• Check the vacuum distribution system for leaks. • **Is the vacuum distribution system OK?**	Yes ▶ No ▶	GO to 11-2. SERVICE as necessary.
11-2	CHECK IGNITION SYSTEM		
	• perform the ignition system diagnostic procedures. • **Is the ignition system OK?**	Yes ▶ No ▶	GO to 11-3. SERVICE as necessary.
11-3	CHECK BYPASS AIR (BPA) CONTROL SYSTEM		
	• perform the Bypass Air (BPA) control system diagnostic procedures. • **Is the BPA control system OK?**	Yes ▶ No ▶	GO to 11-4. SERVICE as necessary.
11-4	CHECK FUEL DELIVERY SYSTEM		
	• perform the fuel delivery system diagnostic procedures. • **Is the fuel delivery system OK?**	Yes ▶ No ▶	GO to 11-5. SERVICE as necessary.
11-5	PERFORM EEC QUICK TEST		
	• perform the EEC Quick Test. • **Are diagnostic trouble codes obtained or are any other conditions noticed?**	Yes ▶ No (2.0L and 2.5L) ▶ No (All others) ▶	SERVICE as necessary. GO to 11-6. GO to 11-7.
11-6	CHECK EXHAUST GAS RECIRCULATION (EGR) SYSTEM		
	• perform the Exhaust Gas Recirculation (EGR) system diagnostic procedures. • **Is the EGR system OK?**	Yes ▶ No ▶	GO to 11-7. SERVICE as necessary.
11-7	CHECK AIR INTAKE SYSTEM		
	• perform the air intake system diagnostic procedures. • **Is the air intake system OK?**	Yes ▶ No ▶	GO to 11-8. SERVICE as necessary.

Routine 11 - Surge (Part 1)

TEST STEP		RESULT ▶	ACTION TO TAKE
11-8	CHECK EVAPORATIVE EMISSION (EVAP) SYSTEM		
	• perform the Evaporative Emission (EVAP) system diagnostic procedures. • **Is the EVAP system OK?**	Yes (1.6L Turbo) ▶ Yes (All others) ▶ No ▶	GO to 11-9. RETURN to the Diagnostic Routine Index and CHECK for other concerns. SERVICE as necessary.
11-9	CHECK TURBOCHARGER SYSTEM		
	• perform the turbocharger system diagnostic procedures. • **Is the turbocharger system OK?**	Yes ▶ No ▶	RETURN to the Diagnostic Routine Index and CHECK for other concerns. SERVICE as necessary.

Routine 11 - Surge (Part 2)

TEST STEP		RESULT ▶	ACTION TO TAKE
12-1	CHECK VACUUM DISTRIBUTION		
	• Check the vacuum distribution system for leaks. • **Is the vacuum distribution system OK?**	Yes ▶ No ▶	GO to 12-2. SERVICE as necessary.
12-2	CHECK IGNITION SYSTEM		
	• perform the ignition system diagnostic procedures. • **Is the ignition system OK?**	Yes ▶ No ▶	GO to 12-3. SERVICE as necessary.
12-3	CHECK BASIC ENGINE		
	• check engine compression. • check the intake manifold, intake manifold gasket, camshaft and valves. • **Is the basic engine OK?**	Yes ▶ No ▶	GO to 12-4. SERVICE as necessary.
12-4	PERFORM EEC QUICK TEST		
	• perform the EEC Quick Test. • **Are diagnostic trouble codes obtained or are any other conditions noticed?**	Yes ▶ No ▶	SERVICE as necessary. GO to 12-5.
12-5	CHECK EXHAUST SYSTEM		
	• perform the exhaust system diagnostic procedures. • **Is the exhaust system OK?**	Yes ▶ No ▶	GO to 12-6. SERVICE as necessary.
12-6	CHECK FUEL DELIVERY SYSTEM		
	• perform the fuel delivery system diagnostic procedures. • **Is the fuel delivery system OK?**	Yes ▶ No ▶	RETURN to Diagnostic Routine Index and CHECK for other concerns. SERVICE as necessary.

Routine 12 - Backfires

TEST STEP		RESULT ▶	ACTION TO TAKE
13-1	CHECK AIR INTAKE SYSTEM		
	• perform the air intake system diagnostic procedures. • **Is the air intake system OK?**	Yes ▶ No ▶	GO to 13-2. SERVICE as necessary.
13-2	CHECK IGNITION SYSTEM		
	• perform the ignition system diagnostic procedures. • **Is the ignition system OK?**	Yes ▶ No ▶	GO to 13-3. SERVICE as necessary.
13-3	CHECK FUEL DELIVERY SYSTEM		
	• perform the fuel delivery system diagnostic procedures. • **Is the fuel delivery system OK?**	Yes ▶ No ▶	GO to 13-4. SERVICE as necessary.
13-4	CHECK EXHAUST SYSTEM		
	• perform the exhaust system diagnostic procedures. • **Is the exhaust system OK?**	Yes (2.0L and 2.5L) ▶ Yes (All others) ▶ No ▶	GO to 13-5. GO to 13-6. SERVICE as necessary.
13-5	CHECK EXHAUST GAS RECIRCULATION (EGR) SYSTEM		
	• perform the Exhaust Gas Recirculation (EGR) system diagnostic procedures. • **Is the EGR system OK?**	Yes ▶ No ▶	GO to 13-6. SERVICE as necessary.
13-6	CHECK BASIC ENGINE		
	• check the engine compression. • check the camshaft and valves. • **Is the basic engine OK?**	Yes ▶ No ▶	GO to 13-7. SERVICE as necessary.

Routine 13 - Lack/Loss Of Power (Part 1)

TEST STEP		RESULT ▶	ACTION TO TAKE
13-7	PERFORM EEC QUICK TEST		
	• perform the EEC Quick Test. • **Are diagnostic trouble codes obtained or are any other conditions noticed?**	Yes ▶ No (1.6L Turbo) ▶ No (All Others) ▶	SERVICE as necessary. GO to 13-8. GO to 13-9.
13-8	CHECK TURBOCHARGER SYSTEM		
	• perform the turbocharger system diagnostic procedures. • **Is the turbocharger system OK?**	Yes ▶ No ▶	GO to 13-9. SERVICE as necessary.
13-9	CHECK DRIVETRAIN		
	• perform the clutch system diagnostic procedures (MTX). • perform the automatic transaxle diagnostic procedures (ATX). • check for dragging brakes. • **Is the drivetrain OK?**	Yes ▶ No ▶	RETURN to the Diagnostic Routine Index and CHECK for other concerns. SERVICE as necessary.

Routine 13 - Lack/Loss Of Power (Part 2)

NOTE: If the following fails to correct the condition, it is recommended that the owner change the source of fuel. Water, alcohol percentage, fuel vapor pressure and lead can be detected by using Rotunda Gas Check 113-00004, or equivalent.

TEST STEP		RESULT ▶	ACTION TO TAKE
14-1	CHECK IGNITION SYSTEM		
	• perform the ignition system diagnostic procedures. • **Is the ignition system OK?**	Yes ▶ No ▶	GO to 14-2. SERVICE as necessary.
14-2	CHECK VACUUM DISTRIBUTION		
	• Check the vacuum distribution system for leaks. • **Is the vacuum distribution system OK?**	Yes (2.0L and 2.5L) ▶ Yes (All others) ▶ No ▶	GO to 14-3. GO to 14-4. SERVICE as necessary.
14-3	CHECK EXHAUST GAS RECIRCULATION (EGR) SYSTEM		
	• perform the Exhaust Gas Recirculation (EGR) system diagnostic procedures. • **Is the EGR system OK?**	Yes ▶ No ▶	GO to 14-4. SERVICE as necessary.
14-4	PERFORM EEC QUICK TEST		
	• perform the EEC Quick Test. • **Are diagnostic trouble codes obtained or are any other conditions noticed?**	Yes ▶ No ▶	SERVICE as necessary. GO to 14-5.
14-5	CHECK COOLING SYSTEM		
	• check the cooling system for overheating conditions. • **Is the cooling system OK?**	Yes (1.6L Turbo) ▶ Yes (All Others) ▶ No ▶	GO to 14-6. RETURN to the Diagnostic Routine Index and CHECK for other concerns. SERVICE as necessary.

Routine 14 - Spark Knock (Part 1)

TEST STEP		RESULT ▶	ACTION TO TAKE
14-6	CHECK TURBOCHARGER SYSTEM		
	• perform the turbocharger system diagnostic procedures. • **Is the turbocharger system OK?**	Yes ▶ No ▶	RETURN to the Diagnostic Routine Index and CHECK for other concerns. SERVICE as necessary.

Routine 14 - Spark Knock (Part 2)

TEST STEP	RESULT ▶	ACTION TO TAKE
15-1 CHECK VACUUM DISTRIBUTION		
• Check the vacuum distribution system for leaks. • **Is the vacuum distribution system OK?**	Yes ▶ No ▶	GO to 15-2. SERVICE as necessary.
15-2 CHECK IGNITION SYSTEM		
• perform the ignition system diagnostic procedures. • **Is the ignition system OK?**	Yes ▶ No ▶	GO to 15-3. SERVICE as necessary.
15-3 CHECK AIR INTAKE SYSTEM		
• perform the air intake system diagnostic procedures. • **Is the air intake system OK?**	Yes ▶ No ▶	GO to 15-4. SERVICE as necessary.
15-4 CHECK FUEL DELIVERY SYSTEM		
• perform the fuel delivery system diagnostic procedures. • **Is the fuel delivery system OK?**	Yes ▶ No ▶	GO to 15-5. SERVICE as necessary.
15-5 PERFORM EEC QUICK TEST		
• perform the EEC Quick Test. • **Are diagnostic trouble codes obtained or are any other conditions noticed?**	Yes ▶ No (2.0L and 2.5L) ▶ No (All others) ▶	SERVICE as necessary. GO to 15-6. GO to 15-7.
15-6 CHECK EXHAUST GAS RECIRCULATION (EGR) SYSTEM		
• perform the Exhaust Gas Recirculation (EGR) system diagnostic procedures. • **Is the EGR system OK?**	Yes ▶ No ▶	GO to 15-7. SERVICE as necessary.
15-7 CHECK COOLING SYSTEM		
• check the cooling system (thermostat). • **Is the cooling system OK?**	Yes ▶ No ▶	GO to 15-8. SERVICE as necessary.

Routine 15 - Poor Fuel Economy (Part 1)

TEST STEP	RESULT ▶	ACTION TO TAKE
15-8 CHECK EXTERNAL FACTORS		
• Check all factors external to the engine: — Tire pressure — Transaxle slipping — Brake dragging — Odometer calibration — Vehicle load — Driving habits — Road and weather conditions • **Are all of the external factors OK?**	Yes ▶ No ▶	GO to 15-9. SERVICE as necessary.
15-9 CHECK EXHAUST SYSTEM		
• perform the exhaust system diagnostic procedures. • **Is the exhaust system free of restrictions?**	Yes ▶ No ▶	GO to 15-10. SERVICE as necessary.
15-10 CHECK BASIC ENGINE		
• check engine compression. • check the intake manifold, intake manifold gasket, camshaft and valves. • **Is the basic engine OK?**	Yes ▶ No ▶	RETURN to the Diagnostic Routine Index and CHECK for other concerns. SERVICE as necessary.

Routine 15 - Poor Fuel Economy (Part 2)

NOTE: Canada and some states or metropolitan areas in the United States require periodic idle emission tests. All Ford products have been designed to pass these tests. If a Ford product fails an idle emission test, it is probable that 1) the engine temperature was not warm and stabilized prior to the test, or 2) the vehicle had idled excessively long prior to the test.

Prior to starting any services, complaints of an idle emission test failure should be verified by using the test procedure of the area which failed the vehicle if the area is approved by Ford for performance warranty.

The following example encompasses most of the emissions measurement modes of the current state idle test procedures:

- Ensure that the engine is at normal operating temperature and that all accessories are turned off.
- Read the emissions at idle.
- Run the engine at 2500 ± 300 rpm.
- Read the emissions within 30 seconds.
- Return the engine speed to idle.
- Read the emissions within 30 seconds.

If any emission components are changed, Keep Alive Memory (KAM) should be cleared before repeating the state emission test procedure.

TEST STEP		RESULT ▶	ACTION TO TAKE
16-1	PERFORM EEC QUICK TEST		
	• perform the EEC Quick Test. • **Are diagnostic trouble codes obtained, or are any other conditions noticed?**	Yes ▶ No ▶	SERVICE as necessary. GO to 16-2.
16-2	CHECK IGNITION SYSTEM		
	• perform the ignition system diagnostic procedures. • **Is the ignition system OK?**	Yes ▶ No ▶	GO to 16-3. SERVICE as necessary.
16-3	CHECK VACUUM DISTRIBUTION		
	• Check the vacuum distribution system for leaks. • **Is the vacuum distribution system OK?**	Yes ▶ No ▶	GO to 16-4. SERVICE as necessary.

Routine 16 - Emissions Compliance (Part 1)

TEST STEP		RESULT ▶	ACTION TO TAKE
16-4	CHECK FUEL DELIVERY SYSTEM		
	• perform the fuel delivery system diagnostic procedures. • **Is the fuel delivery system OK?**	Yes (2.0L and 2.5L) ▶ Yes (All others) ▶ No ▶	GO to 16-5. GO to 16-6. SERVICE as necessary.
16-5	CHECK EXHAUST GAS RECIRCULATION (EGR) SYSTEM		
	• perform the Exhaust Gas Recirculation (EGR) system diagnostic procedures. • **Is the EGR system OK?**	Yes ▶ No ▶	GO to 16-6. SERVICE as necessary.
16-6	CHECK POSITIVE CRANKCASE VENTILATION (PCV) SYSTEM		
	• perform the Positive Crankcase Ventilation (PCV) system diagnostic procedures. • **Is the PCV system OK?**	Yes ▶ No ▶	GO to 16-7. SERVICE as necessary.
16-7	CHECK EVAPORATIVE EMISSION (EVAP) SYSTEM		
	• perform the Evaporative Emission (EVAP) system diagnostic procedures. • **Is the EVAP system OK?**	Yes ▶ No ▶	GO to 16-8. SERVICE as necessary.
16-8	CHECK AIR INTAKE SYSTEM		
	• perform the air intake system diagnostic procedures. • **Is the air intake system OK?**	Yes ▶ No ▶	GO to 16-9. SERVICE as necessary.
16-9	CHECK EXHAUST SYSTEM		
	• perform the exhaust system diagnostic procedures. • **Is the exhaust system OK?**	Yes ▶ No ▶	GO to 16-10. SERVICE as necessary.
16-10	CHECK COOLING SYSTEM		
	• perform the cooling system diagnostic procedures. • **Is the cooling system OK?**	Yes (1.6L Turbo) ▶ Yes (All others) ▶ No ▶	GO to 16-11. GO to 16-12. SERVICE as necessary.
16-11	CHECK TURBOCHARGER SYSTEM		
	• perform the turbocharger system diagnostic procedures. • **Is the turbocharger system OK?**	Yes ▶ No ▶	GO to 16-12. SERVICE as necessary.

Routine 16 - Emissions Compliance (Part 2)

TEST STEP		RESULT ▶	ACTION TO TAKE
16-12	CHECK BASIC ENGINE		
	• check the engine compression. • check the intake manifold gasket, the camshaft and the valves. • **Is the engine OK?**	Yes ▶ No ▶	RETURN to the Diagnostic Routine Index and CHECK for other concerns. SERVICE as necessary.

Routine 16 - Emissions Compliance (Part 3)

NOTE: Use this Routine when the Malfunction Indicator Lamp (MIL) or "Check Engine" lamp, the overdrive off lamp (2.0L 4EAT and 2.5L 4EAT only), or the manual shift lamp (1.6L 4EAT only) is on or flashing while driving.

TEST STEP	RESULT ▶	ACTION TO TAKE
17-1 PERFORM EEC OR 4EAT QUICK TEST		
• perform the appropriate Quick Test: — EEC Quick Test if the MIL is on or flashing while driving — 4EAT Quick Test if the overdrive off lamp or manual shift lamp is on or flashing while driving (other than overdrive off or manual shift driving) • **Are diagnostic trouble codes obtained or are any other conditions noticed?**	Yes ▶ No ▶	SERVICE as necessary. RETURN to the Diagnostic Routine Index and CHECK for other concerns.

Routine 17 - Warning Indicator Lamps

TEST STEP	RESULT ▶	ACTION TO TAKE
18-1 PERFORM 4EAT QUICK TEST		
• perform the 4EAT Quick Test. • **Are diagnostic trouble codes obtained or are any other conditions noticed?**	Yes ▶ No ▶	SERVICE as necessary. GO to 18-2.
18-2 CHECK BASIC TRANSAXLE		
• perform the automatic transaxle diagnostic procedures. • **Is the automatic transaxle OK?**	Yes ▶ No ▶	RETURN to the Diagnostic Routine Index and CHECK for other concerns. SERVICE as necessary.

Routine 18 - Automatic Transaxle Concerns

TEST STEP	RESULT ▶	ACTION TO TAKE
19-1 CHECK MANUAL TRANSAXLE		
• check the manual transaxle. • **Is the manual transaxle OK?**	Yes ▶ No ▶	RETURN to the Diagnostic Routine Index and CHECK for other concerns. SERVICE as necessary.

Routine 19 - Manual Transaxle Concerns

TEST STEP		RESULT ▶	ACTION TO TAKE
20-1	CHECK OIL LEVEL		
	• Check for proper filling of the crankcase and for proper dipstick application. • **Are the oil level and dipstick OK?**	Yes ▶ No ▶	GO to 20-2. SERVICE as required.
20-2	CHECK ENGINE FOR EXTERNAL LEAKS		
	• Check the following components for leakage. — Valve cover gasket — Crankshaft seals — Oil pan gasket and seals — Dipstick — Oil filter and seal — Oil pump — Engine assembly • **Are external leaks evident?**	Yes ▶ No ▶	SERVICE as necessary. GO to 20-3.
20-3	CHECK POSITIVE CRANKCASE VENTILATION (PCV) SYSTEM		
	• perform the Positive Crankcase Ventilation (PCV) system diagnostic procedures. • **Is the PCV system OK?**	Yes (1.6L Turbo) ▶ Yes (All others) ▶ No ▶	GO to 20-4. GO to 20-5. SERVICE as necessary.
20-4	CHECK TURBOCHARGER SYSTEM		
	• perform the turbocharger system diagnostic procedures. • **Is the turbocharger system OK?**	Yes ▶ No ▶	GO to 20-5. SERVICE as necessary.
20-5	CHECK ENGINE FOR INTERNAL LEAKS		
	• check the engine for internal oil leakage: — Oil contamination / dilution from fuel or water • **Are internal leaks evident?**	Yes ▶ No ▶	SERVICE as necessary. RETURN to the Diagnostic Routine Index and CHECK for other concerns.

Routine 20 - High Oil Consumption

TEST STEP		RESULT ▶	ACTION TO TAKE
21-1	CHECK COOLING SYSTEM		
	• perform the cooling system diagnostic procedures. • **Is the cooling system OK?**	Yes ▶ No ▶	GO to 21-2. SERVICE as necessary.
21-2	CHECK TEMPERATURE GAUGE		
	• perform the temperature gauge diagnostic procedures. • **Is the temperature gauge OK?**	Yes ▶ No ▶	GO to 21-3. SERVICE as necessary.
21-3	PERFORM EEC QUICK TEST		
	• perform the EEC Quick Test. • **Are diagnostic trouble codes obtained, or are any other conditions noticed?**	Yes ▶ No ▶	GO to 21-4. SERVICE as necessary.
21-4	CHECK IGNITION SYSTEM		
	• Test Step ADV1 for the 1.6L, Test Step ADV6 for the 1.3L and 1.8L or Test Step IST1 for the 2.0L or the 2.5L and perform the ignition system diagnostic procedures. • **Is the ignition system OK?**	Yes ▶ No ▶	GO to 21-5. SERVICE as necessary.
21-5	CHECK BASIC ENGINE		
	• check for internal engine leaks. • check the: — oil level. — coolant passages. — cylinder head and gasket. — engine block. • **Is the basic engine OK?**	Yes ▶ No ▶	RETURN to the Diagnostic Routine Index and CHECK for other concerns. SERVICE as necessary.

Routine 21 - Overheating

TEST STEP		RESULT ▶	ACTION TO TAKE
22-1	CHECK COOLING SYSTEM		
	• check the cooling system: — thermostat — cooling fan • **Is the cooling system OK?**	Yes ▶ No ▶	GO to 22-2. SERVICE as necessary.
22-2	CHECK TEMPERATURE GAUGE		
	• perform the temperature gauge diagnostic procedures. • **Is the temperature gauge OK?**	Yes ▶ No ▶	GO to 22-3. SERVICE as necessary.
22-3	PERFORM EEC QUICK TEST		
	• perform the EEC Quick Test. • **Are diagnostic trouble codes obtained or are any other conditions noticed?**	Yes ▶ No ▶	SERVICE as necessary. RETURN to the Diagnostic Routine Index and CHECK for other concerns.

Routine 22 - Runs Cold

TEST STEP		RESULT ▶	ACTION TO TAKE
23-1	CHECK EXHAUST EMISSIONS		
	• perform the exhaust emissions diagnostic procedures. • **Are the exhaust emissions OK?**	Yes (2.0L and 2.5L) ▶	GO to 23-2.
		Yes (All Others) ▶	RETURN to the Diagnostic Routine Index and CHECK for other concerns.
		No ▶	SERVICE as necessary.
23-2	CHECK EXHAUST GAS RECIRCULATION (EGR) SYSTEM		
	• perform the Exhaust Gas Recirculation (EGR) system diagnostic procedures. • **Is the EGR system OK?**	Yes ▶	RETURN to the Diagnostic Routine Index and CHECK for other concerns.
		No ▶	SERVICE as necessary.
23-3	CHECK AIR INTAKE SYSTEM		
	• perform the air intake system diagnostic procedures. • **Is the air intake system OK?**	Yes ▶	GO to 23-4.
		No ▶	SERVICE as necessary.
23-4	CHECK FUEL DELIVERY SYSTEM		
	• perform the fuel delivery system diagnostic procedures. • **Is the fuel delivery system OK?**	Yes ▶	GO to 23-5.
		No ▶	SERVICE as necessary.
23-5	PERFORM EEC QUICK TEST		
	• perform the EEC Quick Test. • **Are diagnostic trouble codes obtained or are any other conditions noticed?**	Yes ▶	SERVICE as necessary.
		No ▶	RETURN to the Diagnostic Routine Index and CHECK for other concerns.

Routine 23 - Exhaust System Concerns (Part 1)

TEST STEP		RESULT ▶	ACTION TO TAKE
23-6	CHECK POSITIVE CRANKCASE VENTILATION (PCV) SYSTEM		
	• perform the Positive Crankcase Ventilation (PCV) system diagnostic procedures. • **Is the PCV system OK?**	Yes ▶ No ▶	GO to 23-7. SERVICE as necessary.
23-7	CHECK BASIC ENGINE		
	• check the following: — Valve guides / stems / seals — Oil drain passages in head — Piston rings (seized, worn) — Pistons (worn) — Cylinder bores (scuffed) • **Is the basic engine OK?**	Yes (1.6L Turbo) ▶ Yes (All others) ▶ No ▶	GO to 23-8. RETURN to the Diagnostic Routine Index and CHECK for other concerns. SERVICE as necessary.
23-8	CHECK TURBOCHARGER SYSTEM		
	• check the turbocharger system. • **Is the turbocharger system OK?**	Yes ▶ No ▶	RETURN to the Diagnostic Routine Index and CHECK for other concerns. SERVICE as necessary.
23-9	CHECK BYPASS AIR (BPA) CONTROL SYSTEM		
	• perform the Bypass Air (BPA) control system diagnostic procedures. • **Is the BPA control system OK?**	Yes ▶ No ▶	GO to 23-10. SERVICE as necessary.
23-10	CHECK COOLING SYSTEM		
	• perform the cooling system pressure test. • **Is the cooling system OK?**	Yes ▶ No ▶	RETURN to the Diagnostic Routine Index and CHECK for other concerns. SERVICE as necessary.

Routine 23 - Exhaust System Concerns (Part 2)

TEST STEP		RESULT ▶	ACTION TO TAKE
24-1	CHECK FUEL DELIVERY SYSTEM		
	• perform the fuel delivery system diagnostic procedures. • **Is the fuel delivery system OK?**	Yes ▶ No ▶	GO to 24-2. SERVICE as necessary.
24-2	CHECK EVAPORATIVE EMISSION (EVAP) SYSTEM		
	• perform the Evaporative Emission (EVAP) system diagnostic procedures. • **Is the EVAP system OK?**	Yes ▶ No ▶	GO to 24-3. SERVICE as necessary.
24-3	CHECK POSITIVE CRANKCASE VENTILATION (PCV) SYSTEM		
	• perform the Positive Crankcase Ventilation (PCV) system diagnostic procedures. • **Is the PCV system OK?**	Yes ▶ No ▶	RETURN to the Diagnostic Routine Index and CHECK for other concerns. SERVICE as necessary.

Routine 24 - Fuel System Concerns (Odor)

TEST STEP		RESULT ▶	ACTION TO TAKE
25-1	CHECK ACCESSORY DRIVE		
	• check the drive belts and the drive belt components. • **Is the accessory drive OK?**	Yes ▶ No ▶	GO to 25-2. SERVICE as necessary.
25-2	CHECK BASIC ENGINE		
	• check the oil level and valves. • **Is the basic engine OK?**	Yes ▶ No ▶	GO to 25-3. SERVICE as necessary.
25-3	CHECK ELECTRONIC ENGINE CONTROL (EEC) SOLENOIDS		
	• Pinpoint Tests SCP and SCG, and perform the EEC solenoid diagnostic procedures. • **Are the EEC solenoids OK?**	Yes ▶ No ▶	RETURN to the Diagnostic Routine Index and CHECK for other concerns. SERVICE as necessary.
25-4	CHECK ACCESSORY DRIVE COMPONENTS		
	• check the drive belt components. • **Are the drive belt components OK?**	Yes ▶ No ▶	RETURN to the Diagnostic Routine Index and CHECK for other concerns. SERVICE as necessary.

Routine 25 - Engine Noise (Part 1)

TEST STEP		RESULT ▶	ACTION TO TAKE
25-5	CHECK FOR LOOSE COMPONENTS		
	• Visually inspect the vehicle for loose components. • **Are there any loose components?**	Yes ▶ No ▶	SERVICE as necessary. RETURN to the Diagnostic Routine Index and CHECK for other concerns.
25-6	CHECK VACUUM DISTRIBUTION		
	• Check the vacuum distribution system for leaks. • **Are there any vacuum distribution system leaks?**	Yes ▶ No ▶	SERVICE as necessary. GO to 25-7.
25-7	CHECK AIR INTAKE SYSTEM		
	• check the air intake system for leaks. • **Is the air intake system OK?**	Yes ▶ No ▶	GO to 25-8. SERVICE as necessary.
25-8	CHECK SPARK PLUGS		
	• check the spark plugs for proper torque. • **Are the spark plugs OK?**	Yes ▶ No ▶	GO to 25-9. SERVICE as necessary.
25-9	CHECK COOLING SYSTEM		
	• check the cooling system for leaks. • **Is the cooling system OK?**	Yes ▶ No ▶	GO to 25-10. SERVICE as necessary.
25-10	CHECK EVAPORATIVE EMISSION (EVAP) SYSTEM		
	• check the Evaporative Emission (EVAP) system for leaks. • **Is the EVAP system OK?**	Yes ▶ No ▶	RETURN to the Diagnostic Routine Index and CHECK for other concerns. SERVICE as necessary.
25-11	CHECK SECONDARY IGNITION		
	• check the secondary ignition system. • **Is the secondary ignition system OK?**	Yes ▶ No ▶	RETURN to the Diagnostic Routines Index and CHECK for other concerns. SERVICE as necessary.

Routine 25 - Engine Noise (Part 2)

TEST STEP		RESULT ▶	ACTION TO TAKE
25-12	CHECK EXHAUST SYSTEM		
	• check the exhaust system for leaks. • **Is the exhaust system OK?**	Yes (2.0L and 2.5L) ▶ Yes (All Others) ▶ No ▶	GO to 25-13. RETURN to the Diagnostic Routine Index and CHECK for other concerns. SERVICE as necessary.
25-13	CHECK EXHAUST GAS RECIRCULATION (EGR) SYSTEM		
	• check the Exhaust Gas Recirculation (EGR) system for leaks. • **Is the EGR system OK?**	Yes ▶ No ▶	RETURN to the Diagnostic Routine Index and CHECK for other concerns. SERVICE as necessary.
25-14	CHECK BASIC ENGINE		
	• check the: — connecting rod bearings. — main bearings. — piston pins. — piston-to-bore clearance. • **Is the basic engine OK?**	Yes ▶ No ▶	GO to 25-15. SERVICE as necessary.
25-15	CHECK FOR SPARK KNOCK		
	• Perform Diagnostic Routine 14. • **Does the vehicle have spark knock?**	Yes ▶ No ▶	SERVICE as necessary. RETURN to the Diagnostic Routine Index and CHECK for other concerns.

Routine 25 - Engine Noise (Part 3)

TEST STEP		RESULT ▶	ACTION TO TAKE
26-1	CHECK VIBRATION CONCERNS		
	• check for noise, vibration, and harshness. • **Is there a vibration concern?**	Yes ▶ No ▶	SERVICE as necessary. RETURN to the Diagnostic Routine Index and CHECK for other concerns.

Routine 26 - Vibration Concerns

TEST STEP		RESULT ▶	ACTION TO TAKE
27-1	CHECK BASIC ENGINE		
	• check the engine compression. • check the: — oil level. — valve cover. — crankshaft. — oil pan. — oil filter. — oil pump. — cylinder head. — engine block. — valves. — timing belt. — intake manifold. • **Is the basic engine OK?**	Yes ▶ No ▶	RETURN to the Diagnostic Routine Index and CHECK for other concerns. SERVICE as necessary.

Routine 27 - Basic Engine

Symptom Procedures

The Diagnostic Routines list in test step form the systems that can contribute to a particular condition in the order of probability, ease of accomplishment, and accessibility. These routines can be used as check lists for reference in the event of unusual or infrequent causes of a malfunction.

The order in which the diagnostic routines are listed has been carefully organized to include the most frequent faults at the top of each symptom list and least frequent at the bottom. In some cases a system is listed ahead of another due to the fact that it is much easier to diagnose and, therefore, less time consuming. Unless the fault is evident, it is recommended that all diagnosis begin with a thorough visual inspection of a suspected system or component, followed by a system by system diagnosis as presented in the following routines. After each repair is made, check to see if symptom(s) are still presented. If a particular system is determined to be operating normally, return to the Diagnostic Routine for other possible causes of the symptom.

SPECIAL NOTES:

The technician is not required to adhere to the order specified in the diagnostic routines due to variations in vehicle type, system accessibility, vehicle repair history or technician experience.

On-line Automotive Service Information System **(OASIS)** numbers have been included where applicable.

The technician should obtain OASIS special service information on the customer's concern prior to performing extensive diagnosis and repairs.

When referenced to another area, look at the visual inspection chart provided prior to the test procedure. These charts list obvious fault possibilities that may have been overlooked.

This section also contains a "Customer Information Worksheet." This worksheet is to be filled in by the customer so that his/her description of the problem can be given to the technician working on the vehicle.

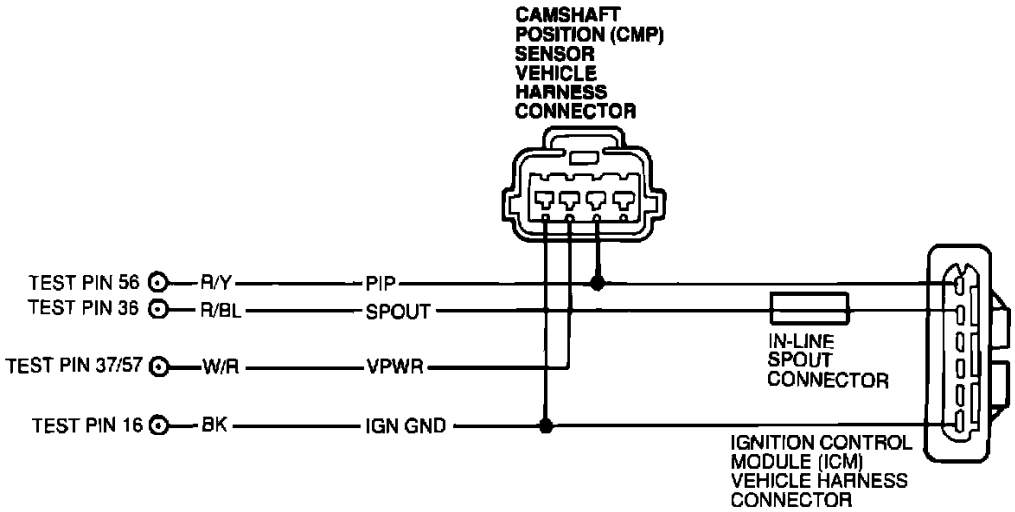

Pinpoint Test Schematic

AA - Testing Notes

NOTE: You should enter this Pinpoint Test only when Quick Test has been successfully completed and the engine is still a no start or when directed here from Ignition Systems.

REMEMBER

To prevent the replacement of good components, be aware that the following non-EEC areas may be at fault.

- Fuel: quality and quantity
- Ignition: general condition, moisture, cracks, damage, etc.
- Engine: internal, valves, timing belt, camshaft
- Starter and battery circuit
- Crank angle sensor
- TFI module
- Distributor
- Ignition coil

- Engine governor module

This Pinpoint Test is intended to diagnose only the following:

- Spark (related to EEC)

- Harness circuits: PIP, SPOUT, IGN GND, VPWR

- Processor assembly

TEST STEP		RESULT ▶	ACTION TO TAKE
AA1	ATTEMPT TO CRANK ENGINE		
	NOTE: **Verify fuel pump inertia switch is set (button pushed in). Refer to Owner Guide for location.** ● **Does engine crank?**	Yes ▶ No ▶	GO to AA2. REFER to STARTING AND CHARGING SYSTEMS.

Pinpoint Test AA1

TEST STEP		RESULT ▶	ACTION TO TAKE
AA2	CHECK FOR VREF AT THROTTLE POSITION SENSOR		
	● Key off. ● Disconnect TP sensor. ● Key on, engine off. ● Measure voltage between VREF circuit and SIG RTN circuit at the TP sensor vehicle harness connector. Refer to the illustation. ● **Is voltage between 4.0 volts and 6.0 volts?** 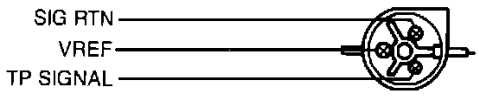 **ALTERNATE THROTTLE POSITION SENSOR VEHICLE HARNESS CONNECTOR** 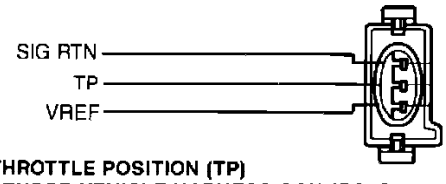 **THROTTLE POSITION (TP) SENSOR VEHICLE HARNESS CONNECTOR**	Yes ▶ No ▶	RECONNECT TP sensor. GO to AA3. GO to Pinpoint Test Step C1.

Pinpoint Test AA2

TEST STEP		RESULT ▶	ACTION TO TAKE
AA3	CHECK FOR SPARK AT PLUGS		
	● Disconnect the spark plug wire to any accessible cylinder. ● Connect spark tester between spark plug wire and engine ground. ● Crank engine and check for spark. ● Reconnect the spark plug wire to the spark plug. ● **Was spark present and consistent?**	Yes ▶ No ▶ ▶	GO to AA13. **For 2.0L Probe:** GO to AA25. **For all others:** GO to AA4.

Pinpoint Test AA3

TEST STEP	RESULT ▶	ACTION TO TAKE
AA4 CHECK FOR SPARK AT COIL		
• Remove high tension coil wire from distributor and install spark tester. • Check for spark while cranking. • Reconnect high tension coil wire to distributor. • **Was spark present during crank?**	Yes ▶ No ▶	REFER to IGNITION For TFI cap, rotor and wires diagnosis. GO to AA5.

Pinpoint Test AA4

TEST STEP	RESULT ▶	ACTION TO TAKE
AA5 CHECK CONTINUITY OF IGN GND CIRCUIT		
• Key off. • Disconnect processor 60 pin connector. Inspect for damaged or pushed out pins, corrosion, loose wires, etc. Service as necessary. • Install breakout box, leave processor disconnected. — **For vehicles with TFI only:** — Disconnect TFI module connector. — **For 2.0L Probe:** — Disconnect TFI and Crank Angle Sensor (CAS). — **For vehicles with distributor hall and TFI:** — Disconnect distributor hall connector. • Measure resistance between Test Pin 16 at breakout box and TFI or distributor hall or CAS vehicle harness connector IGN GND circuit. • **Is resistance less than 5.0 ohms?**	Yes ▶ No ▶	GO to AA6. SERVICE open circuit. REMOVE breakout box. RECONNECT all components. RERUN Quick Test.

Pinpoint Test AA5

TEST STEP	RESULT ▶	ACTION TO TAKE
AA6 ISOLATION OF PROBLEM TO SPOUT CIRCUIT		
• Reconnect TFI module, CAS connector or distributor hall connector, as applicable. • Breakout box installed. • Connect processor to breakout box. • Timing switch to "DIST" position on breakout box. • Attempt to start vehicle. • **Does the vehicle start?**	Yes ▶ No ▶	Timing switch to "Computed" position on breakout box. GO to AA11. GO to AA7.

Pinpoint Test AA6

TEST STEP	RESULT ▶	ACTION TO TAKE
AA7 CHECK SPOUT SIGNAL		
• Key on, engine off. • Breakout box installed, processor connected. • Timing switch to "DIST" position on breakout box. • Measure voltage between Test Pin 36 at breakout box and battery negative post during crank. • **Is voltage between 3.0 and 6.0 volts?**	Yes ▶ No ▶	EEC system OK. REMOVE breakout box. RECONNECT all components. REFER to IGNITION SYSTEM. PLACE timing switch to "Computed" position and GO to AA8.

Pinpoint Test AA7

TEST STEP		RESULT ▶	ACTION TO TAKE
AA8	CHECK SPOUT AND PIP CIRCUITS FOR SHORT TO POWER		
	• Key off. • Breakout box installed. • Disconnect processor. **For 2.0L Probe:** — Disconnect TFI module Crank Angle Sensor (CAS) **For vehicles with remote mounted TFI:** — Disconnect distributor hall and TFI module. **For all others:** — Disconnect TFI module. • Key on. • Measure voltage between Test Pin 36 (SPOUT) at breakout box and battery negative post. • Measure voltage between Test Pin 56 (PIP) at breakout box and battery negative post. • **Is voltage greater than 10.5 volts?**	Yes ▶ No ▶	SERVICE short circuit to the START circuit or to the VPWR circuit in the harness. REMOVE breakout box. RECONNECT all components. RERUN Quick Test. GO to AA9.

Pinpoint Test AA8

TEST STEP		RESULT ▶	ACTION TO TAKE
AA9	CHECK SPOUT AND PIP CIRCUITS FOR SHORTS TO GROUND		
	• Key off. • Breakout box installed. • Disconnect processor. **For 2.0L Probe:** — Disconnect TFI and Crank Angle Sensor (CAS). **For vehicles with remote mounted TFI:** — Disconnect distributor hall and TFI module. **For all others:** — Disconnect TFI module. • Measure resistance between Test Pin 36 (SPOUT) and Test Pins 16, 20, 40, 46, 60 (short to GROUND) and 56 (short to PIP) at breakout box. • Measure resistance between Test Pin 56 (PIP) and Test Pins 16, 20, 40, 46, 60 (short to GROUND) at breakout box. • **Is each resistance greater than 10,000 ohms?**	Yes ▶ No ▶	GO to AA10. SERVICE short circuit. REMOVE breakout box. RECONNECT all components. RERUN Quick Test. If vehicle does not start, GO to AA10.

Pinpoint Test AA9

TEST STEP		RESULT ▶	ACTION TO TAKE
AA10	ISOLATE SHORT(S) IN PROCESSOR • Key off. • Breakout box installed. • Reconnect processor to breakout box. **For 2.0L Probe:** — Disconnect TFI and Crank Angle Sensor (CAS). **For vehicles with remote mounted TFI:** — Disconnect distributor hall and TFI module. **For all others:** — Disconnect TFI module. • Measure resistance between Test Pin 36 (SPOUT) and Test Pins 37 and 57 (short to POWER). Also Test Pins 40 and 60 (short to GROUND) at breakout box. • Measure resistance between Test Pin 56 (PIP) and Test Pins 37 and 57 (short to POWER). Also Test Pins 40 and 60 (short to GROUND) at breakout box. • **Is each resistance greater than 500 ohms?**		Yes ▶ No ▶	RECONNECT all components. GO to AA11. REPLACE processor. REMOVE breakout box. RECONNECT all components. RERUN Quick Test.

Pinpoint Test AA10

TEST STEP		RESULT ▶	ACTION TO TAKE
AA11	CHECK PIP SIGNAL • Key off. • Breakout box installed, processor connected. • Measure voltage between Test Pin 56 and Test Pin 40/60 at breakout box. • Crank engine, record reading. • **Is voltage between 3.0 and 7.0 volts?**	Yes ▶ No ▶	REPLACE processor. REMOVE breakout box. RECONNECT all components. RERUN Quick Test. GO to AA12

Pinpoint Test AA11

TEST STEP		RESULT ▶	ACTION TO TAKE
AA12	CHECK CONTINUITY OF PIP CIRCUIT • Key off. • Breakout box installed. • Disconnect processor. **For 2.0L Probe:** — Disconnect TFI and Crank Angle Sensor (CAS). **For vehicles with remote mounted TFI:** — Disconnect distributor hall and TFI module. **For all others:** — Disconnect TFI module. • Measure resistance between Test Pin 56 at breakout box and PIP circuit at the following connectors as appropriate: TFI, distributor hall, CAS or Engine Governor module. • **Is resistance less than 5.0 ohms?**		Yes ▶ No ▶	REMOVE breakout box. RECONNECT all components. REFER to IGNITION SYSTEM for TFI. SERVICE open circuit. REMOVE breakout box. RECONNECT all components. RERUN Quick Test.

Pinpoint Test AA12

TEST STEP	RESULT ▶	ACTION TO TAKE
AA13 SPOUT SIGNAL VERIFICATION • Key off. • Disconnect processor 60 pin connector. Inspect for damaged or pushed out pins, corrosion, loose wires, etc. Service as necessary. • Install breakout box and connect processor to breakout box. • Ensure timing switch is in "Computed" position on breakout box. • Measure voltage between Test Pin 36 and Test Pins 40 and 60 at the breakout box during crank. • **Is voltage between 3.0 and 6.0 volts?**	Yes No	▶ GO to AA20. ▶ GO to AA8.

Pinpoint Test AA13

TEST STEP	RESULT ▶	ACTION TO TAKE
AA14 ATTEMPT TO RESTART VEHICLE • Key off. • Disconnect Engine Governor module. • Attempt to start vehicle • **Does vehicle start?**	Yes No	▶ REPLACE engine governor module. RERUN Quick Test. ▶ GO to AA15.

Pinpoint Test AA14

TEST STEP	RESULT ▶	ACTION TO TAKE
A15 CHECK CONTINUITY OF PIP CIRCUIT • Key off. • Disconnect processor 60-pin connector. • Install breakout box, leave processor disconnected. • Engine Governor module disconnected. • Measure resistance between Pin 17 at governor module and Test Pin 56 at breakout box. • **Is resistance less than 5.0 ohms?**	Yes No	▶ GO to AA16. ▶ SERVICE open circuit. REMOVE breakout box. RECONNECT all components. RERUN Quick Test.

Pinpoint Test AA15

TEST STEP	RESULT ▶	ACTION TO TAKE
AA16 CHECK CONTINUITY OF PIP CIRCUIT • Key off. • Processor disconnected. • Disconnect distributor hall connector. • Measure resistance between PIP circuit at the distributor hall connector and Test Pin 56 at breakout box. • **Is resistance less than 5.0 ohms?**	Yes No	▶ GO to AA17. ▶ SERVICE open circuit. REMOVE breakout box. RECONNECT all components. RERUN Quick Test.

Pinpoint Test AA16

TEST STEP		RESULT ▶	ACTION TO TAKE
AA17	CHECK PIP CIRCUIT FOR SHORT TO POWER AND GROUND		
	• Key off. • Breakout box installed. • Processor disconnected. • Engine Governor module disconnected. • Distributor hall disconnected. • Measure resistance between Test Pin 56 and Test Pins 16, 20, 40, 46, 60 (short to ground) and 26, 37, 57 (short to power). • **Is each resistance greater than 10,000 ohms?**	Yes ▶ No ▶	GO to AA18. SERVICE short circuit. REMOVE breakout box. RECONNECT all components. RERUN Quick Test.

Pinpoint Test AA17

TEST STEP		RESULT ▶	ACTION TO TAKE
AA18	ISOLATE SHORTS IN PROCESSOR		
	• Key off. • Breakout box installed. • Reconnect processor to breakout box. • Measure resistance between Test Pin 56 and Test Pins 16, 20, 40, 46, 60 (short to ground) and 26, 37, 57 (short to power). • **Is each resistance greater than 10,000 ohms?**	Yes ▶ No ▶	GO to AA19. REPLACE processor. REMOVE breakout box. RECONNECT all components. RERUN Quick Test.

Pinpoint Test AA18

TEST STEP		RESULT ▶	ACTION TO TAKE
AA19	CHECK PIP SIGNAL		
	• Key off. • Breakout box installed, processor connected. • Reconnect distributor hall and Engine Governor module. • Measure voltage between Test Pin 56 and Test Pin 16 at breakout box. • **Is voltage between 3.0 and 7.0 volts?**	Yes ▶ No ▶	REPLACE processor. REMOVE breakout box. RECONNECT all components. RERUN Quick Test. GO to AA5.

Pinpoint Test AA19

TEST STEP		RESULT ▶	ACTION TO TAKE
AA20	CHECK FUEL PRESSURE		
	WARNING: IF FUEL STARTS LEAKING, TURN KEY OFF IMMEDIATELY. NO SMOKING. • Connect fuel pressure gauge. • Note initial pressure reading. • Observe pressure gauge as you pressurize fuel system. (Turn key to RUN for one second, then turn key to OFF. Wait 10 seconds. Repeat five times.) • **Does fuel pressure increase?**	Yes ▶ No ▶	GO to Pinpoint Test Step S1. TURN key OFF. REFER to fuel delivery and air induction.

Pinpoint Test AA20

TEST STEP		RESULT ▶	ACTION TO TAKE
AA25	CHECK VPWR CIRCUIT VOLTAGE		
	• Key off. • Disconnect Crank Angle Sensor (CAS). • Key on, engine off. • Measure voltage between VPWR circuit at crank angle sensor vehicle harness connector and battery negative post. • **Is voltage greater than 10.5 volts?**	Yes ▶ No ▶	GO to AA4. GO to AA26.

Pinpoint Test AA25

TEST STEP		RESULT ▶	ACTION TO TAKE
AA26	CHECK VPWR CONTINUITY		
	• Key off. • Crank Angle sensor disconnected. • Install breakout box, leave processor disconnected. • Measure resistance between VPWR circuit at CAS vehicles harness connector and Test Pin 37 / 57 at the breakout box. • **Is resistance less than 5.0 ohms?**	Yes ▶ No ▶	GO to Pinpoint Test Step B1. SERVICE open circuit. REMOVE breakout box Reconnect all components. RERUN Quick Test

Pinpoint Test AA26

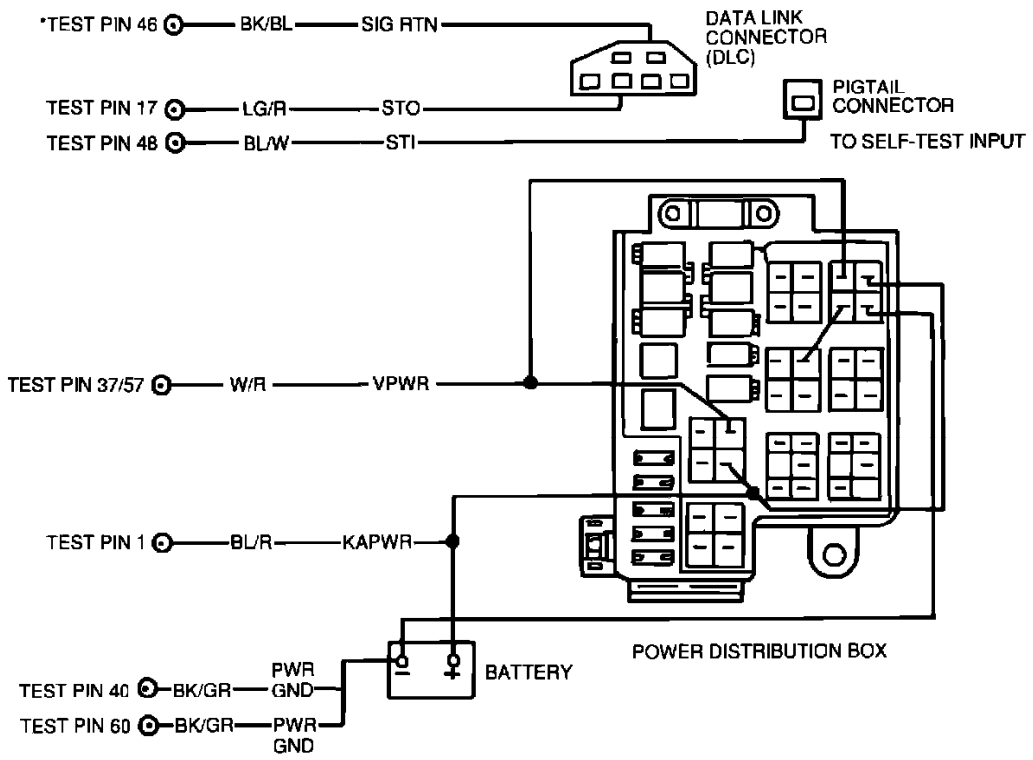

*TEST PINS LOCATED ON BREAKOUT BOX.
ALL HARNESS CONNECTORS VIEWED IN MATING SURFACE

Schematic Diagram

B - Testing Notes

NOTE: You should enter this Pinpoint Test only when directed here from Pinpoint Test C, J, PA, PB, or PC.

REMEMBER

To prevent the replacement of good components, be aware that the following non-EEC areas may be at fault.

- Ignition Switch

- Battery Cables
- Alternator
- Voltage Regulator
- Ground Straps

This Pinpoint Test is intended to diagnose only the following:

- Processor
- Harness circuits: SIG RTN, PWR GND, VPWR, KAPWR, IGNITION SWITCH
- Battery Voltage
- Power Relay

TEST STEP		RESULT ▶	ACTION TO TAKE
B1	CHECK BATTERY VOLTAGE • Key on, engine off. • Measure voltage across battery terminals. • **Is voltage greater than 10.5 volts?**	Yes ▶ No ▶	GO to B2. SERVICE discharged battery. REFER to STARING AND CHARGING SYSTEM.

Pinpoint Test B1

TEST STEP		RESULT ▶	ACTION TO TAKE
B2	CHECK PWR GND CIRCUIT CONTINUITY • Key off. • Disconnect processor 60 pin connector. Inspect for damaged or pushed out pins, corrosion, loose wires, etc. Service as necessary. • Install breakout box and connect processor to breakout box. • Measure resistance between battery negative post and Test Pins 40 and 60 at the breakout box. • **Is each resistance less than 5.0 ohms?**	Yes ▶ No ▶	GO to B3. SERVICE open in PWR GND circuit. REMOVE breakout box. RECONNECT processor. RERUN Quick Test.

Pinpoint Test B2

TEST STEP		RESULT ▶	ACTION TO TAKE
B3	CHECK FOR OPEN BETWEEN SIG RTN AND PWR GND CIRCUITS AT PROCESSOR • Key off. • Breakout box installed, processor connected. • Measure resistance between Test Pin 46 and Test Pins 40 and 60 at the breakout box. • **Is each resistance less than 5.0 ohms?**	Yes ▶ No ▶	GO to B4. REPLACE processor. REMOVE breakout box. RERUN Quick Test.

Pinpoint Test B3

TEST STEP		RESULT ▶	ACTION TO TAKE
B4	CHECK SIG RTN CIRCUIT CONTINUITY • Key off. • Breakout box installed, processor connected. • DVOM on 200 ohm scale. • Measure resistance between Test Pin 46 at the breakout box and SIG RTN circuit in the Self-Test connector. • **Is resistance less than 5.0 ohms?**	Yes ▶ No ▶	GO to B5. SERVICE open in SIG RTN circuit. REMOVE breakout box. RECONNECT processor. RERUN Quick Test.

Pinpoint Test B4

TEST STEP		RESULT ▶	ACTION TO TAKE
B5	CHECK KAPWR CIRCUIT VOLTAGE AT EEC POWER RELAY • Key off. • Disconnect EEC power relay. • Key on, engine off. • Measure voltage between KAPWR circuit at the EEC power relay connector and battery negative post. • **Is voltage greater than 10.5 volts?**	Yes ▶ No ▶	GO to B6. SERVICE open in KAPWR circuit between EEC power relay and battery positive post. REMOVE breakout box. RECONNECT all components. RERUN Quick Test.

Pinpoint Test B5

TEST STEP		RESULT ▶	ACTION TO TAKE
B6	CHECK IGNITION CIRCUIT VOLTAGE AT EEC POWER RELAY NOTE: Vehicles equipped with Power Distribution (Network) Boxes have a diode that serves as power surge protection for the Ignition Control Module (ICM) and ignition switch. A continuity check across this diode may be necessary for a No Start/No DTC situation before proceeding with this Pinpoint Test. • Key on, engine off. • Breakout box installed, PCM connected. • EEC power relay disconnected • Measure voltage between the battery negative post and ignition switch circuit at the EEC power relay connector. • **Is voltage greater than 10.5 volts?**	Yes ▶ No ▶	GO to B7. SERVICE open in ignition switch circuits. REMOVE breakout box. RECONNECT all components. RERUN Quick Test.

Pinpoint Test B6

TEST STEP		RESULT ▶	ACTION TO TAKE
B7	CHECK PWR GND CIRCUIT CONTINUITY • Key off. • Breakout box installed, PCM connected. • EEC power relay disconnected. • Measure resistance between PWR GND circuit at the EEC power relay vehicle harness connector and battery negative post. • **Is the resistance less than 10 ohms?**	Yes ▶ No ▶	GO to B8. SERVICE open circuit. REMOVE breakout box. RECONNECT all components. RERUN Quick Test.

Pinpoint Test B7

TEST STEP	RESULT ▶	ACTION TO TAKE
B8 CHECK VPWR CIRCUIT CONTINUITY • Key off. • Breakout box installed, PCM connected. • EEC power relay disconnected. • Measure resistance between Test Pins 37/57 at the breakout box and the VPWR terminal of the EEC power relay connector. • **Is resistance less than 5.0 ohms?**	Yes ▶ No ▶	GO to B9. SERVICE open in VPWR circuit between the EEC power relay connector and PCM. REMOVE breakout box. RECONNECT all components. RERUN Quick Test.

Pinpoint Test B8

TEST STEP	RESULT ▶	ACTION TO TAKE
B9 CHECK VPWR CIRCUIT VOLTAGE • Key off. • Breakout box installed, processor connected. • Install EEC power relay. • Key on, engine off. • Measure voltage between Test Pin 37/57 and Test Pins 40/60, 46 at breakout box. • **Is voltage greater than 10.5 volts?**	Yes ▶ No ▶	SERVICE open or short to ground in VPWR circuit between processor and EEC power relay. REMOVE breakout box. RECONNECT processor. RERUN Quick Test. REPLACE EEC power relay. REMOVE breakout box. RECONNECT processor. RERUN Quick Test.

Pinpoint Test B9

C - Testing Notes

NOTE: You should enter this Pinpoint Test only when a check for VREF has failed in the sensor Pinpoint Tests (D-Series) or Pinpoint Tests A or QA.

REMEMBER

This Pinpoint Test is intended to diagnose only the following:

- Sensor harness circuits: SIG RTN, VREF

- 3-wire sensors: TP, EVP, PFE, DPFE, MAP, BARO

- Processor assembly

DESCRIPTION

Reference Voltage **(VREF)** is a positive voltage (above 5.0 volts) that is output by the processor. This consistent voltage is used by all 3-wire sensors.

Signal Return **(SIG RTN)** is a dedicated ground used by most EEC-IV sensors and some other inputs.

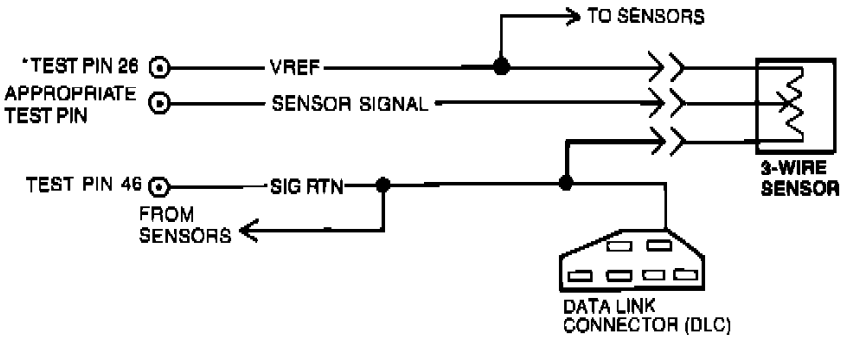

*TEST PINS LOCATED ON BREAKOUT BOX.
ALL HARNESS CONNECTORS VIEWED INTO MATING SURFACE.

Test Pin 26—VREF

Application	Wire Color
Escort/Tracer	LG/W
F-Series (7.0L)	R
Probe	LG/R
All Others	BR/W

Test Pin 46—SIG RTN

Application	Wire Color
Escort/Tracer	LG/BK
F-Series (7.0L)	BK/W
Probe	BK/BL
All Others	GY/R

Schematic Diagram

TEST STEP	RESULT ▶	ACTION TO TAKE
C1 CHECK VEHICLE BATTERY POWER CIRCUIT		
• Key off. • Disconnect Powertrain Control Module (PCM). Inspect for damaged or pushed out pins, corrosion, loose wires, etc. Service as necessary. • Install breakout box and connect PCM to breakout box. • Key on, engine off. • Measure voltage between Test Pin 37 at the breakout box and SIG RTN circuit in the Data Link Connector (DLC). Note voltage. • Measure voltage across battery terminals. Note voltage. • **Are both voltages greater than 10.5 volts, and are both voltages within 1.0 volt of each other?**	Yes ▶ No ▶	GO to C2. Key Off, RECONNECT sensor (if applicable). **For 2.3L Mustang, Tempo/Topaz, Taurus/Sable, Taurus SHO, Thunderbird SC and Continental:** GO to X1. **For Mark VIII:** GO to XB1. **For all others:** GO to B1.

Pinpoint Test C1

TEST STEP	RESULT ▶	ACTION TO TAKE
C2 CHECK VREF VOLTAGE		
• Key on, engine off. • Breakout box installed, processor connected. • Measure voltage between Test Pin 26 and Test Pin 46 at the breakout box. • **What is the voltage?**	Greater than 6.0 volts ▶ Less than 4.0 volts ▶ Between 4.0 volts and 6.0 volts ▶	GO to C4. GO to C5. GO to C3.

Pinpoint Test C2

TEST STEP		RESULT ▶	ACTION TO TAKE
C3	CHECK VREF AND SIG RTN CIRCUITS FOR CONTINUITY		
	• Key off. • Sensor that sent you here disconnected. • Breakout box installed. • Disconnect processor. • Measure resistance between Test Pin 26 at breakout box and VREF circuit at vehicle harness connector of the sensor that sent you here. • Measure resistance between Test Pin 46 at breakout box and SIG RTN circuit at vehicle harness connector of the sensor that sent you here. • **Is each resistance less than 5.0 ohms?**	Yes ▶ No ▶	Reference voltage OK. REMOVE breakout box. RECONNECT sensor. RERUN Quick Test. SERVICE open in VREF or SIG RTN circuits. REMOVE breakout box. RECONNECT all components. RERUN Quick Test.

Pinpoint Test C3

TEST STEP		RESULT ▶	ACTION TO TAKE
C4	CHECK FOR EXCESS VOLTAGE ON VREF CIRCUIT		
	• Key off. • Breakout box installed. • Disconnect PCM. • Disconnect STAR Tester or Scan Tool (ST) (if applicable). NOTE: **For proper results of this test, the STAR Tester or Scan Tool must be disconnected. Due to the circuitry of the STAR Tester/Scan Tool and the vehicle, voltage can be fed to the VREF circuit giving the false indication of a short to power.** • Key on, engine off. • Measure voltage between Test Pin 26 at the breakout box and battery ground. • **Is voltage less than 0.5 volts?**	Yes ▶ No ▶	REPLACE PCM. REMOVE breakout box. RECONNECT all components. RERUN Quick Test. SERVICE short to power in vehicle harness. REMOVE breakout box. RECONNECT PCM and sensor. RERUN Quick Test.

Pinpoint Test C4

TEST STEP		RESULT ▶	ACTION TO TAKE
C5	CHECK FOR SHORTED THROTTLE POSITION SENSOR		
	• Key off. • Breakout box installed, processor connected. • Disconnect Throttle Position (TP) sensor from vehicle harness. • Key on, engine off. • Measure voltage between Test Pin 26 and Test Pin 46 at the breakout box. • **Is voltage less than 4.0 volts?**	Yes ▶ No ▶	Key off, RECONNECT TP sensor: **For vehicles equipped with EVP/PFE/DPFE sensor:** GO to C6. **For all other vehicles:** GO to C7. REPLACE TP sensor. REMOVE breakout box. RECONNECT all components. RERUN Quick Test.

Pinpoint Test C5

TEST STEP		RESULT ▶	ACTION TO TAKE
C6	CHECK FOR SHORTED EVP / PFE / DPFE SENSOR		
	• Key off. • Breakout box installed, processor connected. • Disconnect EVP / PFE / DPFE sensor. • Key on, engine off. • Measure voltage between Test Pin 26 and Test Pin 46 at the breakout box. • **Is voltage less than 4.0 volts?**	Yes ▶ No ▶	Key off, RECONNECT EVP / PFE / DPFE sensor. GO to C7. REPLACE EVP / PFE / DPFE sensor. REMOVE breakout box. RECONNECT all components. RERUN Quick Test.

Pinpoint Test C6

TEST STEP		RESULT ▶	ACTION TO TAKE
C7	CHECK FOR SHORTED MAP / BARO SENSOR		
	NOTE: **For vehicles not equipped with a MAP / BARO sensor, go to C8.** • Key off. • Breakout box installed, PCM connected. • Disconnect MAP / BARO sensor. • Key on, engine off. • Measure voltage between Test Pin 26 and Test Pin 46 at the breakout box. • **Is voltage less than 4.0 volts?**	Yes ▶ No ▶	Key off, RECONNECT MAP / BARO sensor. GO to C8. REPLACE MAP / BARO sensor. REMOVE breakout box. RECONNECT PCM and sensor(s). RERUN Quick Test.

Pinpoint Test C7

TEST STEP		RESULT ▶	ACTION TO TAKE
C8	CHECK VREF CIRCUIT FOR SHORT TO GROUND		
	• Key off. • Breakout box installed. • Disconnect PCM. • Disconnect TP sensor. • Disconnect EVP / PFE / DPFE and MAP / BARO, if so equipped. • Measure resistance between Test Pin 26 and Test Pins 20, 40, 46 and 60 at the breakout box. • **Is any resistance less than 1000 ohms?**	Yes ▶ No ▶	SERVICE short to ground. REMOVE breakout box. RECONNECT all components. RERUN Quick Test. REPLACE PCM. REMOVE breakout box. RECONNECT all components. RERUN Quick Test.

Pinpoint Test C8

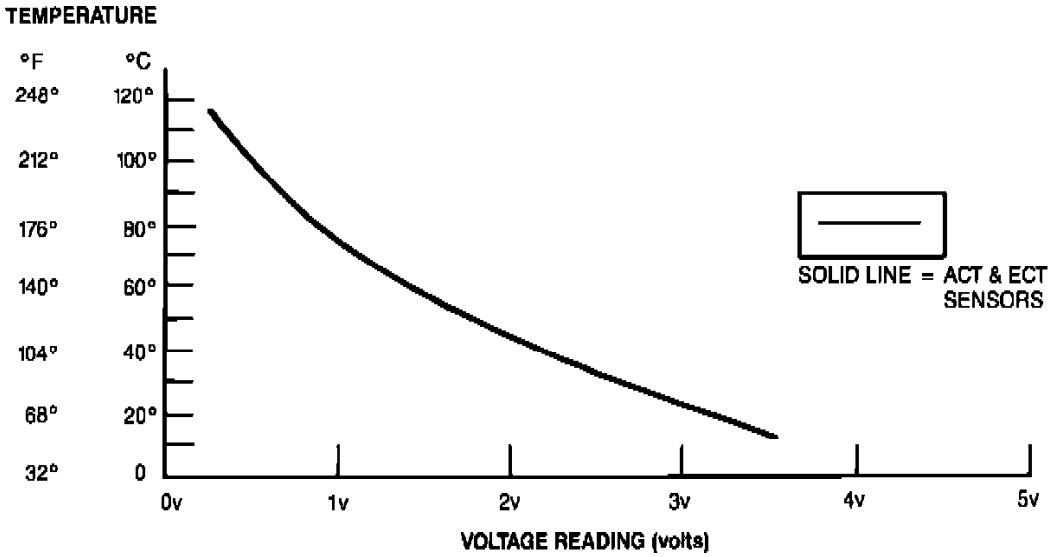

Temperature Sensor Test

Temperature		Engine Coolant/Air Charge Temperature Sensor Values	
°F	°C	Voltage (volts)	Resistance (K ohms)
248	120	.27	1.18
230	110	.35	1.55
212	100	.46	2.07
194	90	.60	2.80
176	80	.78	3.84
158	70	1.02	5.37
140	60	1.33	7.70
122	50	1.70	10.97
104	40	2.13	16.15
86	30	2.60	24.27
68	20	3.07	37.30
50	10	3.51	58.75

Temperature Sensor Test

DA - Testing Notes

NOTE: You should enter this Pinpoint Test only when you have been directed here form Quick Test.

REMEMBER

To prevent the replacement of good components, be aware that the following non-EEC areas may be at fault.

- Coolant level
- Cooling system
- Electro drive cooling fan
- Water pump drive belt
- Engine operating temperature
- Engine oil level
- Thermostat
- Air cleaner duct
- Ambient temperature

This Pinpoint Test is intended to diagnose only the following:

- ACT sensor
- ECT sensor
- Harness circuit: ACT, ECT, and SIG RTN
- Processor assembly

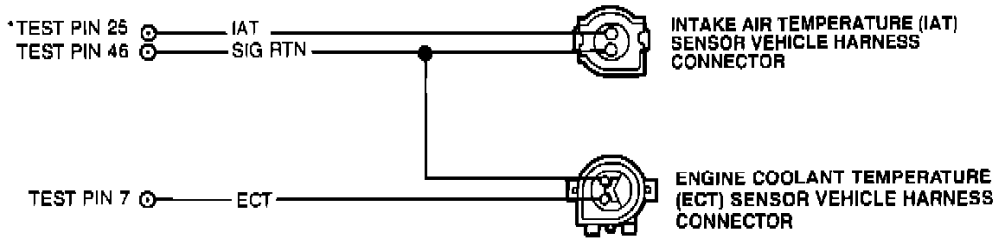

*TEST PINS LOCATED ON BREAKOUT BOX.
ALL HARNESS CONNECTORS VIEWED INTO MATING SURFACE.

NOTE: **On some applications, the IAT sensor circuits may be reversed. Use the wire color charts to correctly identify connecter circuits.**

Test Pin 25—IAT

Application	Wire Colors
1.9L MA SFI	W/GR
2.0L SFI MA Probe	W/LG
7.0L MFI F-Series	BK
All Others	GY

Test Pin 46—SIG RTN

Application	Wire Colors
1.9L MA SFI	LG/BK
2.0L MA SFI Probe	BK/BL
Truck: 7.0L MFI F-Series	BK/W
All Others	GY/R

Test Pin 7—ECT

Application	Wire Colors
1.9L MA SFI	BL/W
2.0L MA SFI Probe	Y/BK
7.0L MFI	GR/Y
All Others	LG/R

Schematic Diagram

TEST STEP		RESULT ▶	ACTION TO TAKE
DA1	SERVICE CODE 21/116 OR 24/114: CHECK OPERATION, INSTALLATION OF TEMPERATURE SENSOR		
	Service Code 21/116 (ECT) or 24/114 (ACT) indicates that the corresponding sensor is out of Self-Test range. Correct range of measure is 0.3 to 3.7 volts. Possible causes: — Low coolant level (ECT). — Ambient temperature below 10°C (50°F) (ACT). — Faulty harness connector. — Faulty sensor. ● Run engine for two minutes at 2000 rpm. **NOTE: For Tempo/Topaz vehicles with Service Code 114 (ACT), due to ACT sensor location, additional warm up time may be required. Run engine until under hood temperatures are warm and stabilized.** **For NO STARTS:** — GO to DA3. **For vehicle STALLS:** — GO to S1. ● Check that upper radiator hose is hot and pressurized. ● Rerun Quick Test. ● **Are codes 21, 24, 114 or 116 present?**	Yes ▶ No ▶	GO to DA2. SERVICE other codes as necessary.

Pinpoint Test DA1

TEST STEP		RESULT ▶	ACTION TO TAKE
DA2	CHECK VREF CIRCUIT VOLTAGE AT THROTTLE POSITION SENSOR		
	• Refer to schematic in Pinpoint Test DH. • Key off. • Disconnect TP sensor. • Key on, engine off. • Measure voltage between VREF circuit and SIG RTN circuit at the TP sensor vehicle harness connector. • **Is voltage between 4.0 volts and 6.0 volts?**	Yes ▶ No ▶	RECONNECT TP sensor. GO to DA3. GO to Pinpoint Test Step C1.

Pinpoint Test DA2

TEST STEP		RESULT ▶	ACTION TO TAKE
DA3	CHECK RESISTANCE OF TEMPERATURE SENSOR WITH ENGINE OFF		
	• Key off. • Disconnect suspect temperature sensor. • Measure resistance between sensor signal circuit and SIG RTN circuit at the temperature sensor. Refer to the corresponding chart at the beginning of this Pinpoint Test for resistance specifications. • **Is resistance within specifications?**	Yes ▶ No ▶	**For ECT sensor with a NO START:** Do not service code 21/116 at this time. **For vehicles with TFI,** GO to Pinpoint Test Step AA1. **For vehicles with DIS,** GO to Pinpoint Test Step AB1. **For vehicles with EDIS,** GO to Pinpoint Test Step AC1. **For all others:** GO to DA4. REPLACE suspect sensor. RECONNECT vehicle harness. RERUN Quick Test.

Pinpoint Test DA3

TEST STEP		RESULT ▶	ACTION TO TAKE
DA4	CHECK RESISTANCE OF TEMPERATURE SENSOR WITH ENGINE RUNNING		
	NOTE: **Engine may have cooled down. Always warm engine before taking ECT sensor resistance measurements. Check for open thermostat.** • Key off. • Suspect temperature sensor disconnected. • Run engine for two minutes at 2000 rpm. • Measure resistance between sensor signal circuit and SIG RTN circuit at the temperature sensor. Refer to the corresponding chart at the beginning of this Pinpoint Test for resistance specifications. • **Is resistance within specification?**	Yes ▶ No ▶	REPLACE processor. RECONNECT vehicle harness. RERUN Quick Test. REPLACE suspect sensor. RECONNECT vehicle harness. RERUN Quick Test.

Pinpoint Test DA4

	TEST STEP	RESULT ▶	ACTION TO TAKE
DA10	SERVICE CODE 51/118 OR 54/113: INDUCE OPPOSITE CODE 61/117 OR 64/112		
	Service Codes 51/118 (ECT) or 54/113 (ACT) indicate that the corresponding sensor signal is greater than the Self-Test maximum. The maximum for ECT and ACT sensors is 4.6 volts. Possible causes: — Open in harness (ACT or ECT). — Faulty connection. — Faulty sensor. — Faulty processor. • Key off. • Disconnect suspect temperature sensor. • Connect a jumper wire between the sensor signal circuit and SIG RTN circuit at the temperature sensor vehicle harness connector. • Run Key On Engine Off Self-Test. • **Is Code 61, 64, 112, or 117 present?**	Yes ▶ No ▶	REPLACE suspect sensor. REMOVE jumper wire. RECONNECT vehicle harness. RERUN Quick Test. REMOVE jumper wire. GO to DA11.

Pinpoint Test DA10

	TEST STEP	RESULT ▶	ACTION TO TAKE
DA11	CHECK CONTINUITY OF SENSOR SIGNAL AND SIG RTN CIRCUITS		
	• Key off. • Suspect temperature sensor disconnected. • Disconnect processor 60 pin connector. Inspect for damaged or pushed out pins, corrosion, loose wires, etc. Service as necessary. • Install breakout box, leave processor disconnected. • Measure resistance between sensor signal circuit at the temperature sensor vehicle harness connector and Test Pin 7 (ECT) or 25 (ACT) at the breakout box. • Measure resistance between SIG RTN circuit at the temperature sensor vehicle harness connector and Test Pin 46 at the breakout box. • **Is each resistance less than 5.0 ohms?**	Yes ▶ No ▶	REPLACE processor. REMOVE breakout box. RECONNECT all components. RERUN Quick Test. SERVICE open circuits. REMOVE breakout box. RECONNECT all components. RERUN Quick Test.

Pinpoint Test DA11

	TEST STEP	RESULT ▶	ACTION TO TAKE
DA20	SERVICE CODE 61/117 OR 64/112: INDUCE OPPOSITE CODE 51/118 OR 54/113		
	Service Codes 61/117 (ECT) or 64/112 (ACT) indicate that the corresponding sensor's signal is less than the Self-Test minimum. The ACT and ECT sensor minimum is 0.2 volts. Possible causes: — Grounded circuit in harness. — Faulty sensor. — Faulty processor. — Faulty connection. • Key off. • Disconnect vehicle harness from suspect sensor. Inspect for damaged, corroded, pushed out pins or loose wires, etc. Service as necessary. • Run Key On Engine Off Self-Test. • **Is code 51, 54, 113 or 118 present?**	Yes ▶ No ▶	REPLACE sensor. RECONNECT harness. RERUN Quick Test. GO to DA21.

Pinpoint Test DA20

TEST STEP		RESULT ▶	ACTION TO TAKE
DA21	CHECK VREF CIRCUIT VOLTAGE AT THROTTLE POSITION SENSOR		
	• Refer to schematic in Pinpoint Test DH. • Key off. • Suspect temperature sensor disconnected. • Disconnect TP sensor. • Key on, engine off. • Measure voltage between VREF circuit and SIG RTN circuit at the TP sensor vehicle sensor connector. • **Is voltage between 4.0 volts and 6.0 volts?**	Yes ▶ No ▶	RECONNECT TP sensor, GO to DA22. GO to Pinpoint Test Step C1.

Pinpoint Test DA21

TEST STEP		RESULT ▶	ACTION TO TAKE
DA22	CHECK TEMPERATURE SENSOR SIGNAL CIRCUIT FOR SHORT TO GROUND		
	• Key off. • Suspect temperature sensor disconnected. • Disconnect processor 60 Pin connector. Inspect for damaged or pushed out pins, corrosion, loose wires, etc. Service as necessary. • Install breakout box, leave processor disconnected. • Measure resistance between Test Pin 7 (ECT) or 25 (ACT) and Test Pins 40, 46 and 60 at the breakout box. • **Is each resistance greater than 10,000 ohms?**	Yes ▶ No ▶	REPLACE processor. REMOVE breakout box. RECONNECT all components. RERUN Quick Test. SERVICE short circuit. REMOVE breakout box. RECONNECT all components. RERUN Quick Test.

Pinpoint Test DA22

TEST STEP		RESULT	ACTION TO TAKE
DA90	CONTINUOUS MEMORY CODE 51/118, 54/113, 61/117 OR 68/112: CHECK SENSOR		
	Continuous Memory codes 51/118 and 54/113 indicate that the sensor signal was greater than the Self-Test maximum of 4.6 volts. The code was generated under normal driving conditions. Continuous Memory codes 61/117 and 64/112 indicate that the sensor signal was less than the Self-Test minimum of 0.2 volts. The code was generated under normal driving conditions.	Yes ▶	DISCONNECT and inspect connectors. If OK, REPLACE the sensor. CLEAR Continuous Memory RERUN Quick Test.
		No ▶	GO to DA91.

Sensors	Continuous Memory Codes
ACT	54/113 and 64/112
ECT	51/118 and 61/117

Possible causes:

— Faulty sensor.
— Open circuit in harness.
— Grounded circuit in harness.
— Faulty processor.

- Enter Key On Engine Off continuous monitor mode.
- Observe VOM or STAR LED for indication of a fault while performing the following:
  — Tap on the sensor to simulate road shock.
  — Wiggle the sensor connector.
- **Is a fault indicated?**

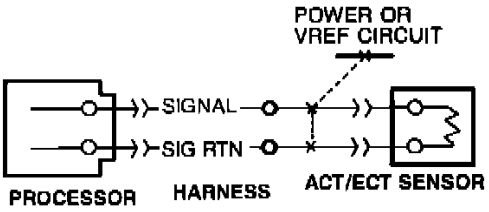

Pinpoint Test DA90

TEST STEP		RESULT	ACTION TO TAKE
DA91	CHECK EEC-IV VEHICLE HARNESS		
	• Still in Key On Engine Off continuous monitor mode. • Observe VOM or STAR LED for fault indication while performing the following: — Refer to the illustration in Step DA90. Grasp the vehicle harness close to the sensor connector. Wiggle, shake or bend a small section of the EEC-IV system vehicle harness while working your way to the dash panel. Also wiggle, shake or bend the EEC-IV system vehicle harness from the dash panel to the processor. • **Is a fault indicated?**	Yes ▶	ISOLATE fault and SERVICE as necessary. CLEAR Continuous Memory RERUN Quick Test.
		No ▶	GO to DA92.

Pinpoint Test DA91

TEST STEP		RESULT ▶	ACTION TO TAKE
DA92	CHECK PROCESSOR AND VEHICLE HARNESS CONNECTORS		
	• Key off. • Disconnect processor 60-Pin connector. Disconnect sensor connector. Inspect for damage, loose or pushed out pins, loose or poorly crimped wires. • **Are connectors and terminals OK?**	Yes ▶	Unable to duplicate and / or identify fault at this time. For further diagnosis using the EEC-IV monitor box, REFER to Intermittent Fault Diagnosis. All others, CLEAR continuous memory RERUN Quick Test.
		No ▶	SERVICE as necessary. CLEAR Continuous Memory RERUN Quick Test.

Pinpoint Test DA92

TEST STEP		RESULT ▶	ACTION TO TAKE
DA100	CONTINUOUS MEMORY CODE 338:		
	Service Code 338 indicates the engine had not reached the normal operating temperature or the system is not heating. The cooling system is not properly controlling the engine temperature. Possible causes: — Thermostat stuck open — Water outlet gasket leak — Water pump gasket leak — Head gasket leak — Heater hose leak • GO directly to the Cooling System for further diagnosis.	▶	

Pinpoint Test DA100

TEST STEP		RESULT ▶	ACTION TO TAKE
DA101	CONTINUOUS MEMORY CODE 339:		
	Service Code 339 indicates the engine had exceeded the high temperature limit. the cooling system is not properly controlling the engine temperature. Possible causes: — Thermostat stuck closed — Water passages clogged — Worn or damaged water pump — Worn or damaged cooling fan — Low coolant level — Worn or damaged radiator cap — Radiator fins clogged — Coolant leakage • GO directly to the Cooling System for further diagnosis.	▶	

Pinpoint Test DA101

DB - Testing Notes

NOTE: You should enter this Pinpoint Test only when you have been directed here form Quick Test.

REMEMBER

To prevent the replacement of good components, be aware that the following non-EEC areas may be at fault.

- Damaged EGR valve
- Damaged EGR transducer
- Stuck throttle plate
- Restricted exhaust system
- Damaged vacuum lines, reservoir or canister

This Pinpoint Test is intended to diagnose only the following:

- EGRT sensor
- Harness circuits: EGRT and SIG RTN
- Processor assembly

DESCRIPTION

The EGR Temperature **(EGRT)** sensor resistance varies with temperature. It is located downstream of the EGR valve and its resistance decreases as EGR flow increases. The EEC processor uses the EGRT sensor input as an indication that the EGR system is functioning properly.

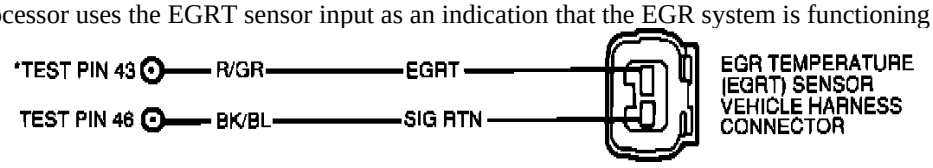

*TEST PINS LOCATED ON BREAKOUT BOX.
ALL HARNESS CONNECTORS VIEWED INTO MATING SURFACE.

Schematic Diagram

TEST STEP		RESULT ▶	ACTION TO TAKE
DB1	CONTINUOUS MEMORY CODE 327: VERIFY CONDITION		
	Continuous Memory Code 327 indicates that sometime in the last 80 warm-up cycles, the EGRT sensor signal was less than the Self-Test minimum. Possible Causes: — Damaged EGRT sensor — EGRT circuit shorted to ground — Damaged processor ● Key off. ● Clear Continuous Memory. ● Start engine and run for at least two minutes. ● Turn engine off and rerun Key On Engine Off Self-Test. ● **Is Continuous Memory Code 327 still present?**	Yes ▶ No ▶	GO to DB2. GO to DB90.

Pinpoint Test DB1

TEST STEP		RESULT ▶	ACTION TO TAKE
DB2	INDUCE OPPOSITE CODE		
	● Key off. ● Disconnect EGRT sensor. ● Clear Continuous Memory. ● Start engine and run for at least two minutes. ● Turn engine off and rerun Key On Engine Off Self-Test. ● **Is Continuous Memory Code 337 present?**	Yes ▶ No ▶	REPLACE EGRT sensor. CLEAR Continuous Memory. RERUN Quick Test. GO to DB3.

Pinpoint Test DB2

TEST STEP		RESULT ▶	ACTION TO TAKE
DB3	CHECK EGRT CIRCUIT FOR SHORTS TO GROUND		
	• Key off. • Disconnect processor 60-pin connector. Inspect for damaged or pushed out pins, corrosion, loose wires, etc. Service as necessary. • Install breakout box, leave processor disconnected. • EGRT sensor disconnected. • Measure resistance between Test Pin 43 and Test Pins 40, 46 and 60 at the breakout box. • **Is each resistance greater than 10,000 ohms?**	Yes ▶ No ▶	REPLACE processor. REMOVE breakout box. RECONNECT all components. RERUN Quick Test. SERVICE short circuit. REMOVE breakout box. RECONNECT all components. RERUN Quick Test.

Pinpoint Test DB3

TEST STEP		RESULT ▶	ACTION TO TAKE
DB5	CONTINUOUS MEMORY CODE 337: VERIFY CONDITION		
	Continuous Memory Code 337 indicates that sometime in the last 80 warm-up cycles, the EGRT sensor signal was greater than the Self-Test maximum. Possible Causes: — Damaged EGRT sensor — Open harness circuit — Damaged processor. • Key off. • Clear Continuous Memory. • Start engine and run for at least two minutes. • Turn engine off and rerun Key On Engine Off Self-Test. • **Is Continuous Memory Code 337 still present?**	Yes ▶ No ▶	GO to DB6. GO to DB90.

Pinpoint Test DB5

TEST STEP		RESULT ▶	ACTION TO TAKE
DB6	CHECK EGRT CIRCUIT FOR SHORTS TO POWER		
	• Key off. • Disconnect EGRT sensor. • Key on, engine off. • Measure voltage between EGRT circuit at the EGRT sensor vehicle harness connector and the battery negative post. • **Is voltage less than 1.0 volts?**	Yes ▶ No ▶	Go to DB7. SERVICE short circuit. RECONNECT all components. RERUN Quick Test.

Pinpoint Test DB6

TEST STEP	RESULT ▶	ACTION TO TAKE
DB7 INDUCE OPPOSITE CODE		
• Key off. • Clear Continuous Memory • Disconnect EGRT sensor. • Connect a jumper wire between EGRT circuit and SIG RTN circuit at the EGRT sensor vehicle harness connector. • Start engine and run for at least two minutes. • Turn engine off and rerun Key On Engine Off Self-Test. • **Is Continuous Memory Code 327 present?**	Yes ▶ No ▶	REPLACE EGRT sensor. CLEAR Continuous Memory RERUN Quick Test. REMOVE jumper. GO to DB8.

Pinpoint Test DB7

TEST STEP	RESULT ▶	ACTION TO TAKE
DB8 CHECK CONTINUITY OF HARNESS CIRCUITS		
• Key off. • Disconnect processor 60-pin connector. Inspect for damaged or pushed out pins, corrosion, loose wires, etc. Service as necessary. • Install breakout box, leave processor disconnected. • EGRT sensor disconnected. • Measure resistance between Test Pin 43 at the breakout box and EGRT circuit at the EGRT sensor vehicle harness connector. • Measure resistance between Test Pin 46 at the breakout box and SIG RTN circuit at the EGRT sensor vehicle harness connector. • **Is each resistance less than 5.0 ohms?**	Yes ▶ No ▶	REPLACE processor. REMOVE breakout box. RECONNECT all components. RERUN Quick Test. SERVICE open circuit. REMOVE breakout box. RECONNECT all components. RERUN Quick Test.

Pinpoint Test DB8

TEST STEP	RESULT ▶	ACTION TO TAKE
DB10 CONTINUOUS MEMORY CODE 326: CHECK ENGINE IDLE		
Continuous Memory Code 326 indicates that sometime in the last 80 warm-up cycles, the processor detected EGR flow at idle. Possible Causes: — EGR valve stuck open — Damaged EGRT sensor — Damaged harness circuit • Key off. • Clear Continuous Memory. • Start engine and let idle for at least two minutes. • **Does engine idle rough or stall?**	Yes ▶ No ▶	TURN engine off. REFER to EMISSIONS for EGR valve diagnosis. TURN engine off. GO to DB11.

Pinpoint Test DB10

TEST STEP	RESULT ▶	ACTION TO TAKE
DB11 VERIFY CONDITION		
• Rerun Key On Engine Off Self-Test. • **Is Continuous Memory Code 326 still present?**	Yes ▶ No ▶	GO to DB12. GO to DB90.

Pinpoint Test DB11

TEST STEP		RESULT ▶	ACTION TO TAKE
DB12	CHECK CONTINUITY OF HARNESS CIRCUITS		
	• Key off. • Disconnect processor 60-pin connector. Inspect for damaged or pushed out pins, corrosion, loose wires, etc. Service as necessary. • Install breakout box, leave processor disconnected. • Disconnect EGRT sensor. • Measure reistance between Test Pin 43 at the breakout box and EGRT circuit at the EGRT sensor vehicle harness connector. • Measure resistance between Test Pin 46 at the breakout box and SIG RTN circuit at the EGRT sensor vehicle harness connector. • **Is each resistance less than 5.0 ohms?**	Yes ▶ No ▶	REPLACE EGRT sensor. REMOVE breakout box. RECONNECT all components. RERUN Quick Test. SERVICE open circuit. REMOVE breakout box. RECONNECT all components. RERUN Quick Test.

Pinpoint Test DB12

TEST STEP		RESULT ▶	ACTION TO TAKE
DB20	CONTINUOUS MEMORY CODE 332: CHECK THAT EGR VALVE HOLDS VACUUM		
	Continuous Memory Code 332 indicates that sometime in last 80 warm-up cycles, the processor detected no EGR flow at part throttle. Possible causes: — Damaged or plugged vacuum line. — EGR valve stuck closed. — Damaged EGR transducer. — Damaged or plugged exhaust tube. — Damaged EGRT sensor. — Damaged harness circuit. • Key off. • Disconnect vacuum hose at EGR valve. • Connect a vacuum pump to the EGR valve. • Slowly apply 10 in-Hg (34 kPa) to the EGR valve. • **Does the EGR valve hold vacuum?**	Yes ▶ No ▶	RELEASE vacuum. GO to DB21. REMOVE vacuum pump. RECONNECT vacuum hose. REFER to EMISSIONS for EGR valve diagnosis.

Pinpoint Test DB20

TEST STEP		RESULT ▶	ACTION TO TAKE
DB21	CHECK EGR VALVE OPERATION		
	• Key off. • Vacuum hose disconnected at EGR valve. • Vacuum pump connected to EGR valve. • Clear Continuous Memory. • Start engine. • Slowly apply 10 in-Hg (34 kPa) vacuum to the EGR valve and hold for at least two minutes. • **Does engine idle rough or stall?**	Yes ▶ No ▶	TURN engine off. GO to DB22. TURN engine off. REMOVE vacuum pump. RECONNECT vacuum hose. REFER to EGR valve diagnosis.

Pinpoint Test DB21

TEST STEP		RESULT ▶	ACTION TO TAKE
DB22	CHECK FOR CONTINUOUS MEMORY CODE 326		
	• Rerun Key On Engine Off Self-Test. • **Is Continuous Memory Code 326 present?**	Yes ▶	REMOVE vacuum pump. RECONNECT vacuum hose. REFER to EMISSIONS for EGR system diagnosis.
		No ▶	REMOVE vacuum pump. REPLACE EGRT sensor. RECONNECT all components. RERUN Quick Test.

Pinpoint Test DB22

TEST STEP		RESULT ▶	ACTION TO TAKE
DB90	CHECK EEC-IV VEHICLE HARNESS		
	• Enter Key On Engine Off continuous monitor mode. • Observe VOM or STAR LED for a fault indication while performing the following: — Grasp the harness close to the sensor connector. Wiggle, shake or bend a small section of the EEC-IV system vehicle harness while working your way to the dash panel. Also wiggle, shake or bend the EEC-IV vehicle harness from the dash panel to the processor. • **Is a fault indicated?**	Yes ▶	ISOLATE fault and SERVICE as necessary. CLEAR Continuous Memory.
		No ▶	GO to DB91.

Pinpoint Test DB90

TEST STEP		RESULT ▶	ACTION TO TAKE
DB91	CHECK PROCESSOR AND HARNESS CONNECTORS		
	• Key off. • Disconnect processor 60-pin connector. Inspect for damaged or pushed out pins, corrosion, loose wires, etc on both the processor and harness connectors. • **Are connector and terminals OK?**	Yes ▶	For further diagnosis using the EEC-IV monitor box, REFER to Intermittent Fault Diagnosis. If the fault is not identified by the EEC-IV Monitor Box diagnosis, then CLEAR Continuous Memory REFER to EMISSIONS for EGR system diagnosis.
		No ▶	SERVICE as necessary. CLEAR Continuous Memory RERUN Quick Test.

Pinpoint Test DB91

NOTE: **MAF Signal Voltage vs. engine operation condition while engine is at normal operating temperature. These values are typical for automatics, but may vary based on vehicle load and temperature.**

MAF Sensor Graph

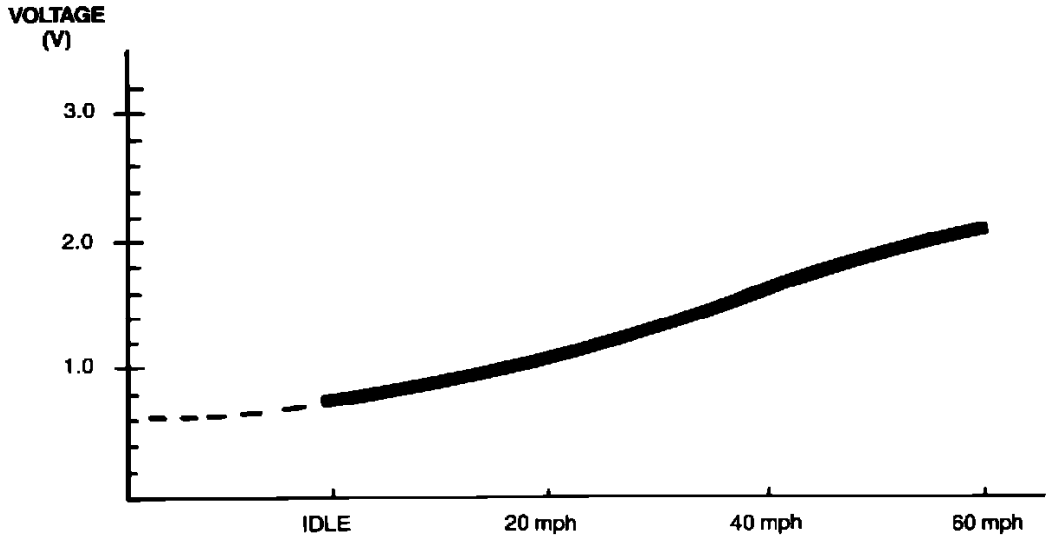

MAF Sensor Data

Engine Condition	MAF Signal Voltage
IDLE	.60
20 mph	1.10
40 mph	1.70
60 mph	2.10

Mass Air Flow Sensor Test

DC - Testing Notes

NOTE: You should enter this Pinpoint Test only when you have been directed here from Quick Test.

REMEMBER

To prevent the replacement of good components, be aware that the following non-EEC areas may be at fault.

- Air cleaner element
- Inlet air duct
- Throttle Body

This Pinpoint Test is intended to diagnose only the following:

- Mass Air Flow sensor assembly
- Harness circuits: VPWR, PWR GND, MAF
- Processor Assembly

DESCRIPTION

The Mass Air Flow (MAF) sensor is located between the air cleaner and the throttle body. The MAF sensor uses a hot wire sensing element to measure the amount of air entering the engine. Air passing over the hot wire causes it to cool. The MAF sensor then outputs an analog voltage signal to the EEC processor to determine the intake air mass. The EEC processor will then calculate the required fuel injector pulse-width in order to provide the desired air/fuel ratio.

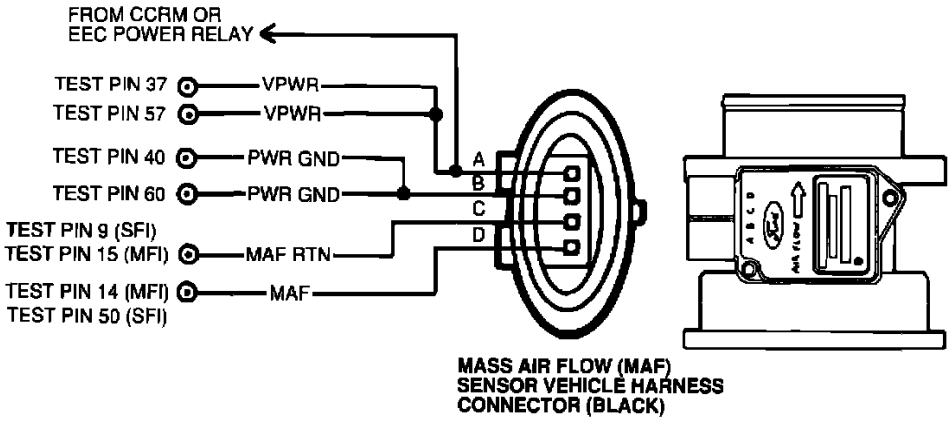

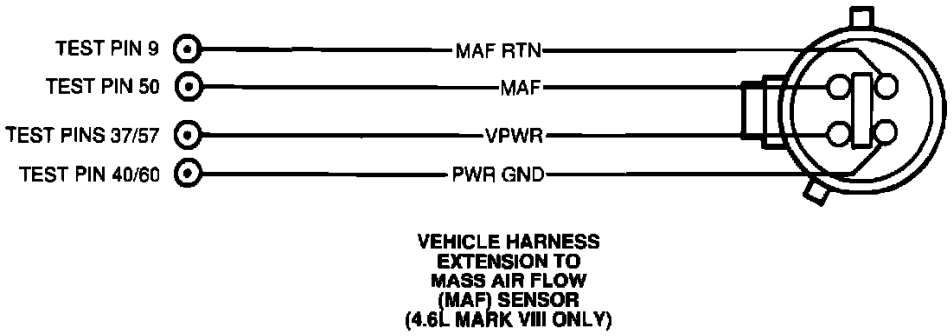

Schematic Diagram

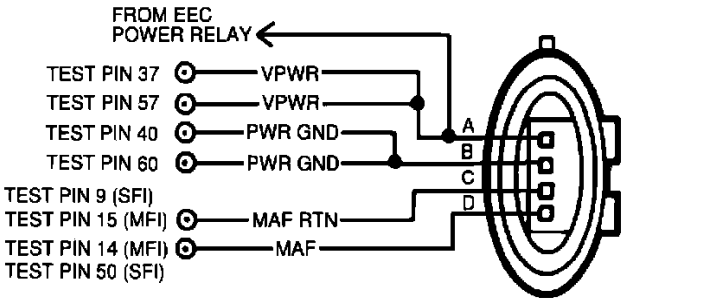

MASS AIR FLOW (MAF) SENSOR VEHICLE HARNESS CONNECTOR (GRAY)

*TEST PINS LOCATED ON BREAKOUT BOX.
ALL HARNESS CONNECTORS VIEWED IN MATING SURFACE.

Test Pin 50 or 14—MAF

Application	Wire Color
1.9L MA SFI	BR/BK
2.0L Probe	R
All Others	LB/R

Test Pin 9 or 15—MAF RTN

Application	Wire Color
1.9L MA SFI	GR/Y
2.0L Probe	BR
All Others	T/LB

Test Pin 40/60—PWR GND

Application	Wire Color
1.9L Escort/Tracer 2.0L Probe	BK/GR
Car: 2.3L Mustang 3.8L Continental 4.6L Crown Victoria/Grand Marquis 4.6L Town Car 4.6L Mark VIII 5.0L Mustang Truck: 2.3L Ranger 3.0L Ranger 5.0L E-Series	BK/W
7.0L F-Series	BK
All Others	BK/LG

Test Pin 37/57—VPWR

Application	Wire Color
1.9L SFI 2.0L Probe	W/R
All Others	R

Schematic Diagram

	TEST STEP	RESULT ▶	ACTION TO TAKE
DC1	DIAGNOSTIC TROUBLE CODE (DTC) 26/159: CHECK VPWR CIRCUIT VOLTAGE		
	DTC 26/159 indicates that the Mass Air Flow (MAF) sensor is out of Self-Test range and that the MAF Signal was greater than .70 volts during Key On, Engine Off Self-Test. Engine Running DTC 26/159 indicates that the MAF Signal was not between .20 and 1.50 volts during Key On Engine Running Self-Test. NOTE: **DTC 26/159 could be generated by the garage exhaust ventilation system. Remove ventilation system and properly vent to outside atmosphere. Rerun KOEO Self-Test.** Possible causes: — Damaged Idle Air Control (IAC) solenoid. — Damaged MAF sensor. — MAF sensor partially connected. — Damaged Powertrain Control Module (PCM). — Air leak before or after MAF sensor. • **Is DTC 12/13/411/412 present?**	Yes ▶ No ▶	**For DTC 13/411:** GO to KE15. **For DTC 12/412:** GO to KE1. GO to DC2.

Pinpoint Test DC1

TEST STEP		RESULT ▶	ACTION TO TAKE
DC2	CHECK VPWR CIRCUIT VOLTAGE		
	• Key off. • Disconnect MAF sensor. • Key on, engine off. • Measure voltage between VPWR circuit at the MAF sensor vehicle harness connector and battery negative post. • **Is voltage greater than 10.5 volts?**	Yes ▶ No ▶	GO to DC3. SERVICE open in VPWR circuit. RERUN Quick Test.

Pinpoint Test DC2

TEST STEP		RESULT ▶	ACTION TO TAKE
DC3	CHECK MAF SENSOR GROUND		
	• Key on, engine off. • MAF sensor disconnected. • Measure voltage between VPWR circuit and PWR GND circuit at the MAF sensor vehicle harness connector. • **Is voltage greater than 10.5 volts?**	Yes ▶ No ▶	GO to DC13. SERVICE open PWR GND circuit. RECONNECT MAF sensor. RERUN Quick Test.

Pinpoint Test DC3

TEST STEP		RESULT ▶	ACTION TO TAKE
DC10	CONTINUOUS MEMORY DIAGNOSTIC TROUBLE CODE (DTC) 66/157: CHECK FOR INTERMITTENT SENSOR		
	Continuous Memory DTC 66/157 indicates that the Mass Air Flow (MAF) sensor signal went below 0.4 volt sometime during the last 80 warm-up cycles. Possible causes: — Poor continuity in MAF sensor harness or connectors. — Intermittent open or short in MAF sensor or harness. — Damaged MAF sensor. — Idle Air Control (IAC) system (possible closed throttle position indication) • Clear Continuous Memory • Start engine and run at idle for approximately 5 to 10 minutes. • Run Key On Engine Off Self-Test. • **Is Continuous Memory DTC 66/157 present?**	Yes ▶ No ▶	GO to DC13. GO to DC11.

Pinpoint Test DC10

TEST STEP		RESULT ▶	ACTION TO TAKE
DC11	MONITOR MAF CIRCUIT UNDER SIMULATED ROAD SHOCK		
	• Key off. • Disconnect Powertrain Control Module (PCM). Inspect for damaged or pushed out pins, corrosion, loose wires, etc. Service as necessary. • Install breakout box, reconnect PCM. • Connect DVOM between Test Pin 50 (SFI vehicles) or Test Pin 14 (MFI vehicles) and Test Pin 9 (SFI vehicles) or Test Pin 15 (MFI vehicles) at the breakout box. • Key on, engine running. • Lightly tap on MAF sensor and wiggle harness connector to simulate road shock. NOTE: **MAF voltage is normally above 0.4 volt. A sudden change down from this minimum limit indicates a fault.** • **Is a fault indicated?**	Yes ▶ No ▶	DISCONNECT and INSPECT MAF sensor connector. If OK, REPLACE MAF sensor. CLEAR Continuous Memory. RERUN Quick Test. LEAVE DVOM and PCM connected. GO to DC12.

Pinpoint Test DC11

TEST STEP		RESULT ▶	ACTION TO TAKE
DC12	CHECK VEHICLE HARNESS FOR INTERMITTENT OPENS OR SHORTS		
	• Key on, engine off. • DVOM connected between Test Pin 50 (SFI vehicles) or Test Pin 14 (MFI vehicles) and Test Pin 9 (SFI vehicles) or Test Pin 15 (MFI vehicles) at the breakout box. — Grasp the vehicle harness closest to the MAF sensor connector. Shake and bend a small section of the vehicle harness while working your way to the dash panel. Also wiggle, shake and bend the vehicle harness from the dash panel to the PCM. • **Is a fault indicated?**	Yes ▶ No ▶	ISOLATE fault and SERVICE as necessary. CLEAR Continuous Memory RERUN Quick Test. RECONNECT all components. Unable to duplicate and/or identify fault at this time. For further diagnosis, REFER to intermittent fault diagnosis.

Pinpoint Test DC12

TEST STEP		RESULT ▶	ACTION TO TAKE
DC13	DIAGNOSTIC TROUBLE CODE (DTC) 66/157 OR 72/129: AIR LEAK AT MAF SENSOR		
	Engine Running DTC 72/129 indicates insufficient MAF change during Dynamic Response Test. Possible causes: — Open MAF circuit. — Open VPWR circuit to MAF sensor. — Open PWR GND circuit to MAF sensor. — Open MAF RTN circuit to MAF sensor. — MAF circuit shorted to ground. — Damaged Powertrain Control Module (PCM). — Damaged MAF sensor. — Air leak before or after MAF sensor. — MAF sensor disconnected. — Idle Air Control (IAC) system failure (at closed throttle position) • Check for broken/loose air outlet tube clamps (throttle body and air cleaner assembly ends), cracks/holes in air outlet tube, worn gaskets between MAF sensor and air cleaner assembly (including intermediate tube on 3.8L SFI Taurus/Sable and 3.8L Continental). • **Is a fault indicated?**	Yes ▶ No ▶	SERVICE as necessary. RECONNECT all components. RERUN Quick Test. GO to DC14.

Pinpoint Test DC13

TEST STEP		RESULT ▶	ACTION TO TAKE
DC14	CHECK CONTINUITY OF MAF AND VPWR CIRCUITS		
	• Key off. • Disconnect MAF sensor. • Disconnect Powertrain Control Module (PCM). Inspect for damaged or pushed out pins, corrosion, loose wires, etc. Service as necessary. • Install breakout box, leave PCM disconnected. • Measure resistance between VPWR circuit at the MAF sensor vehicle harness connector and Test Pins 37 and 57 at the breakout box. **For MFI vehicles:** • Measure resistance between MAF circuit at the MAF sensor vehicle harness connector and Test Pin 14 at the breakout box. **For SFI vehicles:** • Measure resistance between MAF circuit at the MAF sensor vehicle harness connector and Test Pin 50 at the breakout box. • **Is each resistance less than 5.0 ohms?**	Yes ▶ No ▶	GO to DC15. SERVICE open circuit. REMOVE breakout box. RECONNECT all components. RERUN Quick Test.

Pinpoint Test DC14

TEST STEP		RESULT ▶	ACTION TO TAKE
DC15	CHECK MAF CIRCUIT FOR SHORTS TO GROUND AND MAF RTN CIRCUIT		
	• Key off. • MAF sensor disconnected. • Breakout box installed, PCM disconnected. **For MFI vehicles** • Measure resistance between Test Pin 14 and Test Pins 15, 40 and 60 at the breakout box. **For SFI vehicles:** • Measure resistance between Test Pin 50 and Test Pins 9, 40 and 60 at the breakout box. • **Is each resistance greater than 10,000 ohms?**	Yes ▶ No ▶	GO to DC16. SERVICE short circuit(s). REMOVE breakout box. RECONNECT all components. RERUN Quick Test.

Pinpoint Test DC15

TEST STEP		RESULT ▶	ACTION TO TAKE
DC16	CHECK PWR GND CIRCUIT CONTINUITY		
	• Key off. • MAF sensor disconnected. • Breakout box installed, PCM disconnected. • Measure resistance between PWR GND circuit at the MAF sensor vehicle harness connector and battery negative post. • **Is resistance less than 10 ohms?**	Yes ▶ No ▶	GO to DC17. SERVICE open circuit. REMOVE breakout box. RECONNECT all components. RERUN Quick Test.

Pinpoint Test DC16

TEST STEP		RESULT ▶	ACTION TO TAKE
DC17	CHECK MAF RTN CIRCUIT CONTINUITY		
	• Key off. • MAF sensor disconnected. • Breakout box installed, PCM disconnected. **For MFI vehicles:** • Measure resistance between MAF RTN circuit at the MAF sensor vehicle harness connector and Test Pin 15 at the breakout box. **For SFI vehicles:** • Measure resistance between MAF RTN circuit at the MAF sensor vehicle harness connector and Test Pin 9 at the breakout box. • **Is resistance less than 5.0 ohms?**	Yes ▶ No ▶	GO to DC18. SERVICE open circuit. REMOVE breakout box. RECONNECT all components. RERUN Quick Test.

Pinpoint Test DC17

TEST STEP		RESULT ▶	ACTION TO TAKE
DC18	CHECK MAF CIRCUIT FOR SHORT TO GROUND		
	• Key off. • MAF sensor disconnected. • Breakout box installed. • Connect PCM to breakout box. **For MFI vehicles:** • Measure resistance between Test Pin 14 and Test Pins 15, 40 and 60 at the breakout box. **For SFI vehicles:** • Measure resistance between Test Pin 50 and Test Pins 9, 40 and 60 at the breakout box. • **Is each resistance greater than 10,000 ohms?**	Yes ▶ No ▶	GO to DC19. REPLACE PCM. REMOVE breakout box. RECONNECT MAF sensor. RERUN Quick Test.

Pinpoint Test DC18

TEST STEP		RESULT ▶	ACTION TO TAKE
DC19	CHECK MAF CIRCUIT OUTPUT		
	• Key off. • Reconnect MAF sensor. • Breakout box installed, PCM connected. • Key on, engine running. **For MFI vehicles:** • Measure voltage between Test Pin 14 at the breakout box and battery post. **For SFI vehicles:** • Measure voltage between Test Pin 50 at the breakout box and battery post. • **Is voltage between .36 and 1.50 volts?**	Yes ▶ No ▶	GO to DC20. REPLACE MAF sensor assembly. REMOVE breakout box. RECONNECT PCM. RERUN Quick Test.

Pinpoint Test DC19

TEST STEP		RESULT ▶	ACTION TO TAKE
DC20	CHECK MAF CIRCUIT OUTPUT		
	• Key off. • Reconnect MAF sensor. • Breakout box installed, PCM connected. • Key on, engine running. **For MFI vehicles:** • Measure voltage between Test Pin 14 and Test Pin 15 at the breakout box. **For SFI vehicles:** • Measure voltage between Test Pin 50 and Test Pin 9 at the breakout box. • **Is voltage between 0.36 and 1.50 volts?**	Yes ▶ No ▶	REPLACE PCM. REMOVE breakout box. RERUN Quick Test. REPLACE MAF sensor. REMOVE breakout box. RECONNECT PCM. RERUN Quick Test.

Pinpoint Test DC20

TEST STEP		RESULT ▶	ACTION TO TAKE
DC21	DIAGNOSTIC TROUBLE CODE (DTC) 56 / 158: RERUN SELF-TEST WITH MAF SENSOR DISCONNECTED		
	DTC 56 / 158 indicates that the Mass Air Flow (MAF) sensor signal went above 4.5 volts during normal engine operation (continuous) or during Self-Test. NOTE: **DTC 56 / 158 could be generated by foreign material blocking the Mass Air Flow sensor screen causing an air flow restriction. If contaminants are found on the screen, check air filter installation in air cleaner tray and proper sealing of air cleaner / tube before proceeding.** • Key off. • Disconnect MAF sensor. • Start engine, idle one minute. • Key off. • Run Key On Engine Off Self-Test. • **Is DTC 66 or 157 present?**	Yes No	▶ REPLACE MAF sensor. RERUN Quick Test. ▶ GO to DC22.

Pinpoint Test DC21

TEST STEP		RESULT ▶	ACTION TO TAKE
DC22	CHECK MAF CIRCUIT FOR SHORT TO VPWR		
	• Key off. • MAF sensor disconnected. • Disconnect Powertrain Control Module (PCM). Inspect for damaged or pushed out pins, corrosion, loose wires, etc. Service as necessary. • Measure resistance between MAF circuit and VPWR circuit at the MAF sensor vehicle harness connector. • **Is resistance greater than 10,000 ohms?**	Yes No	▶ REPLACE PCM. REMOVE breakout box. RECONNECT MAF sensor. RERUN Quick Test. ▶ SERVICE short circuit. REMOVE breakout box. RECONNECT all components. RERUN Quick Test.

Pinpoint Test DC22

MAP Sensor Graph

NOTE: **MAP sensor output frequency versus manifold vacuum data is based on 30.0 in-Hg barometric pressure.**

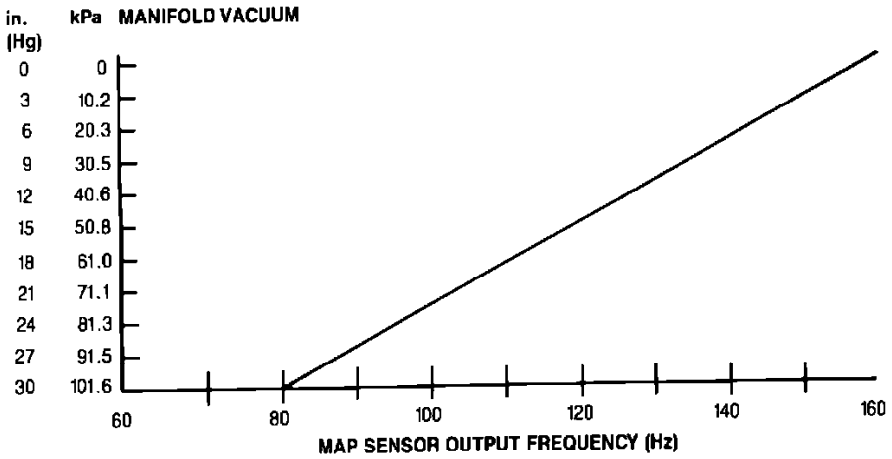

MAP Sensor Data

Manifold Vacuum		Frequency
in-Hg	kPa	Hz
0	0	159
3	10.2	150
6	20.3	141
9	30.5	133
12	40.6	125
15	50.8	117
18	61.0	109
21	71.1	102
24	81.3	95
27	91.5	88
30	101.6	80

Schematic Diagram

MAP/BP Sensor Graph (KOEO)

NOTE: **Frequency may vary plus or minus 3 Hz from the values given due to sensor variations.**

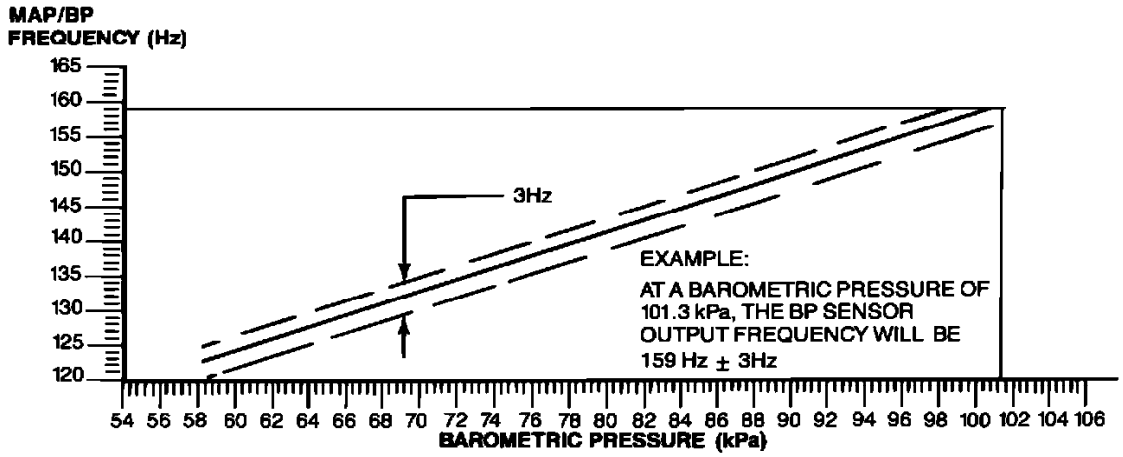

MAP/BP Sensor Data

Barometric Pressure		Frequency
in-Hg	kPa	Hz
17.1	58	122.4
18.3	62	125.5
19.5	66	128.7
20.7	70	131.9
21.8	74	135.1
23.0	78	138.3
24.2	82	141.8
25.4	86	145.4
26.6	90	148.9
27.7	94	152.5
28.9	98	156.1
30.1	102	159.6
31.0	105	162.4

Map Sensor Specifications

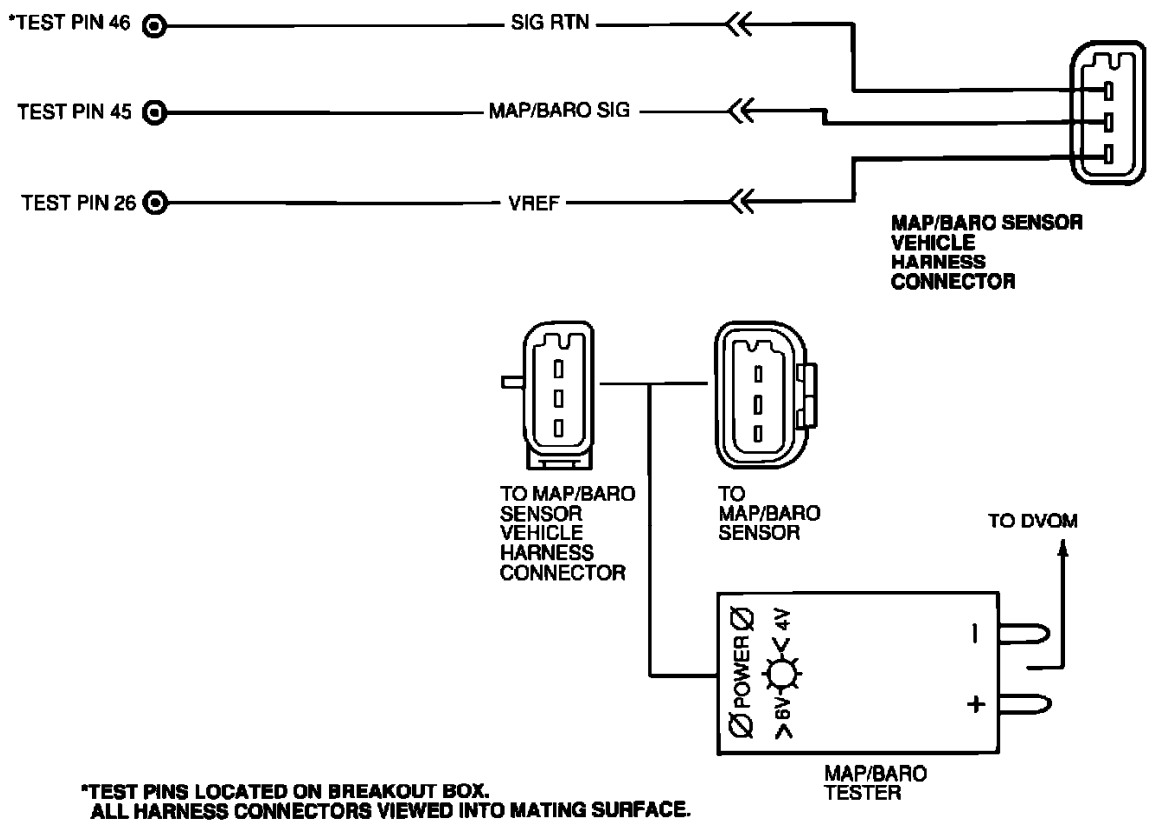

Test Pin 45—MAP/BARO SIG

Application	Wire Color
7.0L F-Series	BL/GR
3.8L SC 5.0L SFI E-Series	DB/LG
All Others	LG/BK

Test Pin 46—SIG RTN

Application	Wire Color
7.0L F-Series	BK/W
All Others	GY/R

Test Pin 26—VREF

Application	Wire Color
7.0L F-Series	R
All Others	BR/W

Schematic Diagram

DF - Testing Notes

NOTE: You should enter this Pinpoint Test only when you have been directed here form Quick Test or Pinpoint Test S.

REMEMBER

To prevent the replacement of good components, be aware that the following non-EEC areas may be at fault.

- Unusually high/low barometric pressure.
- Kinked or obstructed vacuum line (MAP).
- Basic engine (valves, vacuum leak, timing, EGR valve, etc.)

This Pinpoint Test is intended to diagnose only the following:

- MAP/BARO sensor
- Harness circuits: VREF, MAP/BARO, and SIG RTN
- Processor assembly
- MAP vacuum line

DESCRIPTION

The Manifold Absolute Pressure **(MAP)** sensor operates as a piezoelectric (pressure-sensing) disc. However, rather than generating a voltage, its

output a frequency change. The sensor changes frequency relative to intake manifold vacuum. The sensor frequency increases as vacuum increases. The MAP sensor allows the EEC processor to determine what the engine load is. Its signal affects air/fuel ratio, ignition timing, EGR flow and altitude compensation.

The BARO sensor is used to sense the changes in barometric pressure, allowing the EEC processor to sense the altitude at which the vehicle is operating. Its signal affects air/fuel ratio, spark and EGR for altitude compensation.

TEST STEP		RESULT ▶	ACTION TO TAKE
DF1	SERVICE CODE 22 / 126: CHECK FOR POWER TO MAP / BP SENSOR		
	Service Code 22 / 126 indicates that the Manifold Absolute Pressure (MAP) / Barometric Pressure (BP) sensor is out of Self-Test range. Correct MAP / BP tester range of measurement is typically from 1.4 to 1.6 volts. Possible causes: — MAP / BP SIG circuit open between sensor vehicle harness connector and processor. — MAP / BP SIG circuit shorted to VREF, SIG RTN, or GND. — Damaged MAP / BP sensor. — Vacuum trapped at MAP / BP sensor. — High atmospheric pressure. — Damaged processor. — VREF circuit open at MAP / BP sensor. — SIG RTN circuit open at MAP / BP sensor. ● Key off. ● Disconnect the MAP / BP sensor from the vehicle harness. ● Connect the MAP / BP tester between the vehicle harness connector and the MAP / BP sensor. ● Insert MAP / BP tester banana plugs into DVOM. NOTE: **Green light on tester indicates VREF is OK (4-6 volts). Red light (or no light) indicates VREF is either too low or too high.** ● Key on. ● **Is green light on?**	Yes ▶ No ▶	GO to DF3. GO to DF2.

Pinpoint Test DF1

TEST STEP		RESULT ▶	ACTION TO TAKE
DF2	CHECK FOR POWER AT SENSOR VEHICLE HARNESS CONNECTOR		
	NOTE: **Green light reaffirms that VREF is OK (4-6 volts). Red light (or no light) indicates VREF is either too low or too high.** ● Key on. ● MAP / BP tester connected. ● DVOM connected to MAP / BP tester. ● Disconnect MAP / BP sensor. ● **Is green light on?**	Yes ▶ No ▶	REPLACE MAP / BP sensor. RERUN Quick Test. REMOVE MAP / BP tester. RECONNECT MAP / BP sensor. GO to Pinpoint Test Step C1.

Pinpoint Test DF2

TEST STEP		RESULT ▶	ACTION TO TAKE
DF3	CHECK MAP/BP SENSOR OUTPUT		
	NOTE: **Measure several known good MAP/BP sensors on available vehicles. The measured voltage will be typical for your location on the day of testing.** • Key on. • MAP/BP tester connected. • DVOM connected to MAP/BP tester. • Measure MAP/BP sensor voltage on customer vehicle. • **Is DVOM voltage in range for your altitude?**	Yes ▶ No ▶	REMOVE MAP/BP tester. GO to DF4. REMOVE MAP/BP tester. GO to DF5.

Approximate Altitude (Ft.)	Voltage Output (±.04 Volts)
0	1.59
1000	1.56
2000	1.53
3000	1.50
4000	1.47
5000	1.44
6000	1.41
7000	1.39

Pinpoint Test DF3

TEST STEP		RESULT ▶	ACTION TO TAKE
DF4	CHECK MAP/BP SIG CIRCUIT CONTINUITY		
	• Key off. • MAP/BP sensor disconnected. • Disconnect processor 60 pin connector. Inspect for damaged or pushed out pins, corrosion, loose wires, etc. Service as necessary. • Install breakout box, leave processor disconnected. • Measure resistance between MAP/BP SIG circuit at the MAP/BP sensor vehicle harness connector and Test Pin 45 at the breakout box. • **Is resistance less than 5.0 ohms?**	Yes ▶ No ▶	REPLACE processor. REMOVE breakout box. RECONNECT MAP/BP sensor. RERUN Quick Test. SERVICE open circuit. REMOVE breakout box. RECONNECT all components. RERUN Quick Test.

Pinpoint Test DF4

TEST STEP		RESULT ▶	ACTION TO TAKE
DF5	CHECK MAP/BP SIG CIRCUIT FOR SHORTS TO VREF, SIG RTN AND GROUND		
	• Key off. • MAP/BP sensor disconnected. • Disconnect processor 60 pin connector. Inspect for damaged or pushed out pins, corrosion, loose wires, etc. Service as necessary. • Install breakout box, leave processor disconnected. • Measure resistance between Test Pin 45 and Test Pins 26, 46, 40 and 60 at the breakout box. • **Is each resistance greater than 10,000 ohms?**	Yes ▶ No ▶	REPLACE MAP/BP sensor. REMOVE breakout box. RECONNECT processor. RERUN Quick Test. SERVICE short circuit. REMOVE breakout box. RECONNECT all components. RERUN Quick Test.

Pinpoint Test DF5

TEST STEP		RESULT ▶	ACTION TO TAKE
DF7	ENGINE RUNNING SERVICE CODE 22 / 126: CHECK FOR EGR SERVICE CODES		
	Service Code 22 / 126 (KOER) indicates the MAP / BP signal is out of range for Engine Running Self-Test. Possible causes: — Damaged MAP / BP sensor. — Damaged vacuum hoses. — Excess EGR. ● **Are Engine Running Service Codes 31, 32, 33, 34, 35, 327, 326, 328, 332, 334, 336 or 337 present?**	Yes ▶ No ▶	GO to Trouble Code Charts for appropriate Pinpoint Test. GO to DF8.

Pinpoint Test DF7

TEST STEP		RESULT ▶	ACTION TO TAKE
DF8	CHECK MAP SENSOR OPERATION		
	● Key off. ● Disconnect vacuum supply hose from MAP sensor. ● Install vacuum pump to MAP sensor. ● Apply 18 in-Hg (61 kPa) vacuum to MAP sensor. ● **Does MAP sensor hold vacuum?**	Yes ▶ No ▶	RELEASE vacuum. GO to DF9. REPLACE MAP sensor. CONNECT vacuum supply hose to MAP sensor. RERUN Quick Test.

Pinpoint Test DF8

TEST STEP		RESULT ▶	ACTION TO TAKE
DF9	ATTEMPT TO ELIMINATE ENGINE RUNNING SERVICE CODE 22 or 126		
	● Key off. ● Plug MAP sensor vacuum supply hose. ● Start engine and maintain 1500+/-100 engine rpm. ● Slowly apply 15 in-Hg (51 kPa) vacuum to MAP sensor. ● While maintaining rpm, perform Engine Running Self-Test. ● **Is Engine Running Service Code 22 or 126 still present?** NOTE: **Disregard any other Service Codes at this time.**	Yes ▶ No ▶	REPLACE MAP sensor. CONNECT vacuum supply hose to MAP sensor. RERUN Quick Test. INSPECT vacuum supply hose to MAP sensor. SERVICE as necessary. If OK, SERVICE other Engine Running Service Codes. If none, GO to Diagnostic Routines, to address any drive concerns.

Pinpoint Test DF9

TEST STEP		RESULT ▶	ACTION TO TAKE
DF10	SERVICE CODE 72 / 129: RERUN DYNAMIC RESPONSE TEST		
	Service Code 72 / 129 indicates that the MAP sensor output did not change enough during the Dynamic Response Test. Possible causes: — System failed to detect partial WOT. — MAP sensor vacuum supply hose improper routing, blockage and / or linkage. — Damaged MAP sensor. ● Rerun Engine Running Self-Test. Be sure a complete WOT is performed during the Dynamic Response portion of the test. ● **Is Engine Running Service Code 72 or 129 still present?**	Yes ▶ No ▶	GO to DF11. SERVICE other Service Codes as necessary. If none, testing complete.

Pinpoint Test DF10

TEST STEP		RESULT ▶	ACTION TO TAKE
DF11	SERVICE CODE 81 / 128: CHECK VACUUM HOSES		
	Continuous Service Code 81 / 128 indicates the MAP sensor vacuum has not changed greater than 2 in-Hg (7 kPa) during normal vehicle operation. Possible causes: — MAP sensor vacuum supply hose improper routing, blockage and / or linkage. — MAP sensor leak. ● Key off. ● Check vacuum hoses for proper routing. Refer to VECI decal. Check MAP sensor vacuum supply hoses for disconnections, kinks or blockage. ● **Are vacuum hoses OK?**	Yes ▶ No ▶	GO to DF12. SERVICE vacuum hoses as necessary. RERUN Quick Test.

Pinpoint Test DF11

TEST STEP		RESULT ▶	ACTION TO TAKE
DF12	CHECK MAP SENSOR OPERATION		
	● Key off. ● Disconnect vacuum supply hose from MAP sensor. ● Install vacuum pump to MAP sensor. ● Apply 18 in-Hg (61 kPa) vacuum to MAP sensor. ● **Does MAP sensor hold vacuum?**	Yes ▶ No ▶	RELEASE vacuum. REMOVE vacuum pump. RECONNECT vacuum supply hose to MAP sensor. GO to DF13. REPLACE MAP sensor. RECONNECT vacuum supply hose to MAP sensor. RERUN Quick Test.

Pinpoint Test DF12

TEST STEP		RESULT ▶	ACTION TO TAKE
DF13	CHECK THAT VACUUM TO MAP SENSOR DECREASES DURING DYNAMIC RESPONSE		
	● Key off. ● Tee a vacuum gauge in the intake manifold vacuum supply hose at the MAP sensor. ● Perform Engine Running Self-Test while observing vacuum. ● **Did vacuum decrease by more than 10 in-Hg (34 kPa) vacuum during Dynamic Response test?**	Yes ▶ No ▶	REPLACE MAP sensor. REMOVE vacuum gauge. RERUN Quick Test. EEC-IV system OK. REFER to Engine SECTION for probable causes affecting engine vacuum.

Pinpoint Test DF13

TEST STEP		RESULT ▶	ACTION TO TAKE
DF90	CHECK FOR CONTINUOUS MEMORY CODE 22/126: EXERCISE MAP/BP SENSOR		
	Continuous Memory Service Code 22/126 indicates the Manifold Absolute Pressure (MAP)/Barometric Pressure (BP) sensor was out of self-test range. The code was set during normal driving conditions. Correct range of measurement is typically from 1.4 to 1.6 volts. Possible causes: — Damaged MAP/BP sensor. — Damaged EEC-IV vehicle harness. — Damaged MAP/BP sensor vehicle harness connectors and/or terminals. — Unusually high/low barometric pressure. • Using Key On, Engine Off Continuous Monitor Mode, observe VOM or STAR LED for indication of a fault while performing the following: — Connect a vacuum pump to the MAP/BP sensor. — Slowly apply 84 kPa (25 in-Hg) vacuum to the MAP/BP sensor. — Slowly bleed vacuum off the MAP/BP sensor. — Lightly tap on MAP/BP sensor (simulate road shock). — Wiggle MAP/BP connector. • **Is fault indicated?** 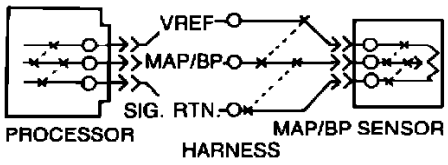 	Yes No	▶ DISCONNECT and INSPECT connectors. If connector and terminals are good, REPLACE MAP/BP sensor. RERUN Quick Test. ▶ GO to DF91.

Pinpoint Test DF90

TEST STEP		RESULT ▶	ACTION TO TAKE
DF91	CHECK EEC-IV VEHICLE HARNESS		
	• Remain in Key On, Engine Off Continuous Monitor Mode. • Observe VOM or STAR LED for a fault indication while performing the following: — Referring to the illustration in Step DF90, grasp the vehicle harness closest to the sensor connector. Wiggle, shake or bend a small section of the EEC-IV system vehicle harness while working your way to the dash panel. Also wiggle, shake or bend the EEC-IV vehicle harness from the dash panel to the processor. • **Is a fault indicated?**	Yes No	▶ ISOLATE fault and SERVICE as necessary. CLEAR Continuous Memory Code. RERUN Quick Test. ▶ GO to DF92.

Pinpoint Test DF91

TEST STEP		RESULT ▶	ACTION TO TAKE
DF92	CHECK PROCESSOR AND VEHICLE HARNESS CONNECTORS		
	• Key off. • Disconnect processor 60 pin connector. • Inspect connectors and connector terminals for obvious damage or faults. • **Are connectors and terminals OK?**	Yes ▶ No ▶	SERVICE as necessary. RERUN Quick Test. Unable to duplicate and / or identify fault at this time. For further diagnosis using the EEC-IV monitor box, REFER to INTERMITTENT FAULT DIAGNOSIS All others, CLEAR Continuous Memory. RERUN Quick Test.

Pinpoint Test DF92

DG - Testing Notes

NOTE: You should enter this Pinpoint Test only when you have been directed here from Quick Test.

REMEMBER

To prevent the replacement of good components, be aware that the following non-EEC areas may be at fault.

- Fuel (quality)

- Basic engine

- Spark timing

This Pinpoint Test is intended to diagnose only the following:

- Knock sensor

- Harness circuits: KS and SIG RTN

- Processor assembly

DESCRIPTION

The Knock Sensor is used to detect engine detonation (spark knock). As a result, a voltage sent to the processor will lead to spark timing retard.

Mark VIII

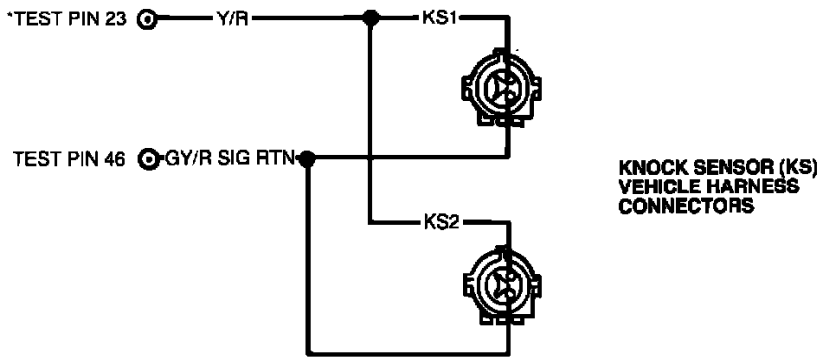

All Others

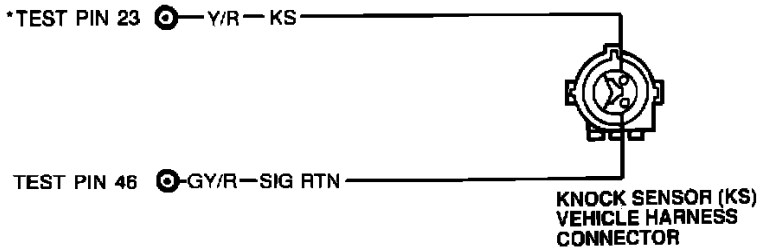

***TEST PINS LOCATED ON BREAKOUT BOX.**
ALL HARNESS CONNECTORS VIEWED INTO MATING SURFACE.

Schematic Diagram

TEST STEP		RESULT ▶	ACTION TO TAKE
DG1	CHECK SENSOR VOLTAGE CYCLING		
	DTC 25/225 indicates that the Knock Sensor (KS) signal to the PCM was not sensed during the Dynamic Response Test in the Key On Engine Running Self-Test. Possible causes are: — Damaged Knock Sensor. — Open or short in harness. — Damaged Powertrain Control Module (PCM). ● Key off. ● Disconnect Powertrain Control Module (PCM). Inspect for damaged or pushed out pins, corrosion, loose wires, etc. ● Service as necessary. ● Install breakout box, connect PCM. ● Cycle the key to on. ● Read DC voltage between Test Pins 23 and 46 at the breakout box. ● **Is DC voltage reading between 2.4 and 2.6 volts?**	Yes ▶ No ▶	GO to DG2. For DC less than 2.4 volts, GO to DG4. For DC greater than 2.6 volt, GO to DG5.

Pinpoint Test DG1

TEST STEP		RESULT ▶	ACTION TO TAKE
DG2	CHECK FOR VOLTAGE INCREASE		
	● Key off. ● Breakout box installed, PCM connected. ● Start and run engine. ● Monitor voltage on the AC setting at idle and at 3,000 rpm between Test Pins 23 and 46 at the breakout box. ● **Does AC voltage reading increase?**	Yes ▶ No ▶	REPLACE PCM. RECONNECT all components. RERUN Quick Test. GO to DG3.

Pinpoint Test DG2

TEST STEP		RESULT ▶	ACTION TO TAKE
DG3	CHECK CONTINUITY OF KS AND SIG RTN CIRCUITS		
	• Key off. • Disconnect processor 60 pin connector. Inspect for damaged or pushed out pins, corrosion, loose wires, etc. Service as necessary. • Install breakout box, leave processor disconnected. • Knock sensor disconnected. • Measure resistance between SIG RTN circuit at the knock sensor vehicle harness connector and Test Pin 46 at breakout box. • Measure resistance between KS circuit at the knock sensor vehicle harness connector and Test Pin 23 at breakout box. • **Is each resistance less than 5.0 ohms?**	Yes ▶ No ▶	GO to DG4. SERVICE open circuit. REMOVE breakout box. RECONNECT all components. RERUN Quick Test.

Pinpoint Test DG3

TEST STEP		RESULT ▶	ACTION TO TAKE
DG4	CHECK KS CIRCUIT FOR SHORT TO GROUND		
	• Key off. • Breakout box installed, PCM disconnected. • KS disconnected. • Measure resistance between Test Pin 23 and Test Pins 40, 46 and 60 at breakout box. • **Is each resistance greater than 10,000 ohms?**	Yes ▶ No ▶	REPLACE KS. REMOVE breakout box. RECONNECT PCM. RECONNECT all components. RERUN Quick Test, if Code 25/225 is still present, REPLACE PCM. SERVICE short circuit. REMOVE breakout box. RECONNECT all components. RERUN Quick Test.

Pinpoint Test DG4

TEST STEP		RESULT ▶	ACTION TO TAKE
DG5	CHECK KS CIRCUIT FOR SHORT TO POWER		
	• Key off. • Breakout box installed, PCM disconnected. • KS disconnected (both KS on Mark VIII). • Key on, engine off. • Measure voltage between Test Pin 23 and Test Pin 40 at breakout box. • **Is voltage less than 0.5 volt?**	Yes ▶ No ▶	REPLACE PCM. REMOVE breakout box. RECONNECT all components. RERUN Quick Test. SERVICE short circuit. REMOVE breakout box. RECONNECT all components. RERUN Quick Test.

Pinpoint Test DG5

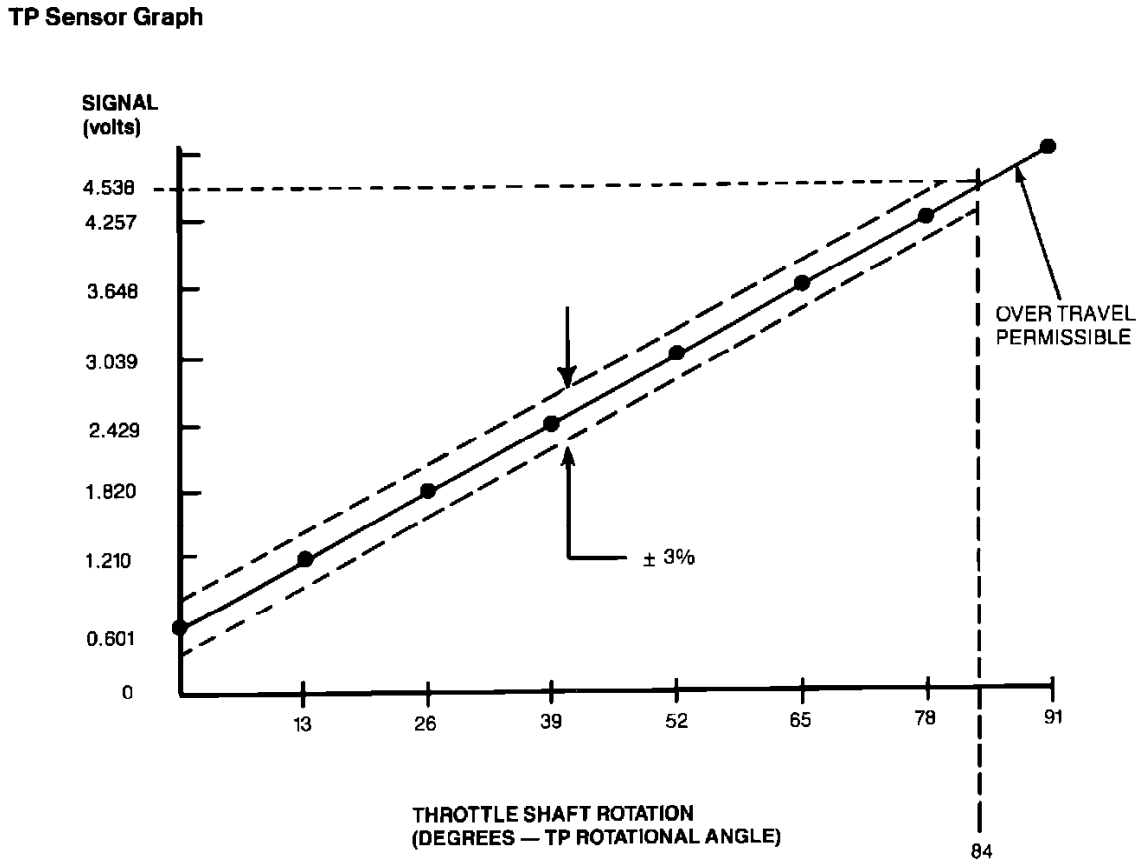

Throttle Position Sensor

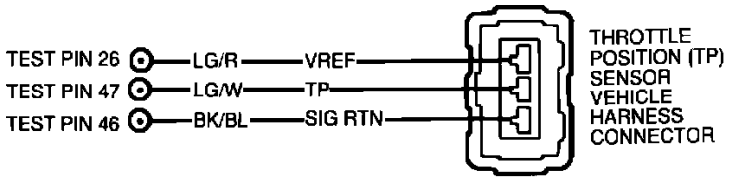

Throttle Position Sensor Schematic

DH - Testing Notes

NOTE: You should enter this Pinpoint Test only when you have been directed here from Quick Test.

REMEMBER

To prevent the replacement of good components, be aware that the following non-EEC areas may be at fault.

- Idle speed/throttle stop adjustment
- Binding throttle shaft/linkage or speed control linkage.
- Choke/high cam system
- TP sensor may not be seated properly

This Pinpoint Test is intended to diagnose only the following:

- Throttle Position (TP) sensor
- Sensor harness circuits: VREF, TP, and SIG RTN
- Processor assembly

DESCRIPTION

The Throttle Position (TP) sensor is a potentiometer that provides a signal to the EEC processor that is directly proportional to throttle plate position.

TEST STEP		RESULT ▶	ACTION TO TAKE
DH1	ENGINE RUNNING SERVICE CODE 23/121: CHECK FOR OTHER SERVICE CODES		
	Service Code 23/121 indicates that the Throttle Position (TP) sensor's rotational setting may be out of Self-Test range. Possible causes: — Binding throttle linkage. — TP sensor may not be seated properly (tightened down). — Damaged TP sensor. — Damaged processor. ● Check for Codes 31/327 in Key On Engine Running Self-Test. ● **Are either of the above codes present with Code 23 or 121?**	Yes ▶ No ▶	RETURN to the Key On Engine Running Service Code chart and PROCEED as directed with Code 31/327. GO to DH2.

Pinpoint Test DH1

TEST STEP		RESULT ▶	ACTION TO TAKE
DH2	SERVICE CODE 23/121: CHECK FOR STUCK THROTTLE PLATE		
	Service Code 23/121 indicates that the Throttle Position (TP) sensor's rotational setting may be out of Self-Test range. Possible causes: — Binding throttle linkage. — TP sensor may not be seated properly (tightened down). — Damaged TP sensor. — Damaged processor. ● Visually inspect carburetor/throttle body and throttle linkage for binding or sticking. ● Verify the throttle linkage is at mechanical/closed throttle. Check for: binding throttle linkage, speed control linkage, vacuum line/electrical harness interference, etc. ● **Does throttle move freely and return to closed throttle position?**	Yes ▶ No ▶	GO to DH3. SERVICE as necessary. RERUN Quick Test.

Pinpoint Test DH2

TEST STEP		RESULT ▶	ACTION TO TAKE
DH3	DIAGNOSTIC TROUBLE CODE (DTC) 53/123: ATTEMPT TO GENERATE DTC 63/122		
	DTC 53/123 indicates that the Throttle Position (TP) sensor signal is greater than the Self-Test maximum value. Possible causes are: — TP sensor may not be seated properly (tightened down). — Damaged TP sensor. — Short to power in harness. — Damaged Powertrain Control Module (PCM). ● Key off. ● Disconnect TP sensor. Inspect for damaged or pushed out pins, corrosion, loose wires, etc. Service as necessary. ● Rerun Key On Engine Off Self-Test. ● **Is DTC 63 or 122 present (ignore all other DTCs)?**	Yes ▶ No ▶	GO to DH4. GO to DH5.

Pinpoint Test DH3

TEST STEP		RESULT ▶	ACTION TO TAKE
DH4	CHECK VREF CIRCUIT VOLTAGE		
	• Key off. • TP sensor disconnected. • Key on, engine off. • Measure voltage between VREF circuit and SIG RTN circuit at the TP sensor vehicle harness connector. • **Is voltage between 4.0 and 6.0 volts?**	Yes ▶ No ▶	REPLACE TP sensor. RERUN Quick Test. Key off. RECONNECT all components. GO to Pinpoint Test Step C1.

Pinpoint Test DH4

TEST STEP		RESULT ▶	ACTION TO TAKE
DH5	CHECK TP CIRCUIT FOR SHORTS TO POWER		
	• Key off. • TP sensor disconnected. • Disconnect Powertrain Control Module (PCM). Inspect for damaged or pushed out pins, corrosion, loose wires, etc. Service as necessary. • Install breakout box, leave PCM disconnected. • Measure resistance between Test Pin 47 and Test Pins 26 and 57 at the breakout box. • **Is each resistance greater than 10,000 ohms?**	Yes ▶ No ▶	REPLACE PCM. REMOVE breakout box. RECONNECT TP sensor. RERUN Quick Test. SERVICE short circuit. REMOVE breakout box. RECONNECT all components. RERUN Quick Test.

Pinpoint Test DH5

TEST STEP		RESULT ▶	ACTION TO TAKE
DH10	DIAGNOSTIC TROUBLE CODE (DTC) 63/122: ATTEMPT TO GENERATE DTC 53/123 OR 23/121		
	DTC 63/122 indicates that the Throttle Position (TP) sensor signal is less than the Self-Test minimum value. Possible causes: — TP sensor may not be seated properly (tightened down). — Damaged TP sensor. — Open harness. — Grounded harness. — Damaged Powertrain Control Module (PCM). • Key off. • Disconnect TP sensor. Inspect for damaged or pushed out pins, corrosion, loose wires, etc. Service as necessary. • Jumper VREF circuit to TP circuit at TP sensor vehicle harness connector. • Run Key On Engine Off Self-Test. NOTE: **If no DTC's are generated, immediately remove jumper and go directly to DH13.** • **Is DTC 53/123 or 23/121 present (ignore all other DTC's)?**	Yes ▶ No ▶	REPLACE TP sensor. REMOVE jumper. RERUN Quick Test. REMOVE jumper. GO to DH11.

Pinpoint Test DH10

TEST STEP		RESULT ▶	ACTION TO TAKE
DH11	CHECK VREF CIRCUIT VOLTAGE		
	• Key off. • TP sensor disconnected. • Key on engine off. • Measure voltage between VREF circuit and SIG RTN circuit at the TP sensor vehicle harness connector. • **Is voltage between 4.0 and 6.0 volts?**	Yes ▶ No ▶	GO to DH12. RECONNECT all components. GO to Pinpoint Test Step C1.

Pinpoint Test DH11

TEST STEP		RESULT ▶	ACTION TO TAKE
DH12	CHECK TP CIRCUIT CONTINUITY		
	• Key off. • TP sensor disconnected. • Disconnect Powertrain Control Module (PCM). Inspect for damaged or pushed out pins, corrosion, loose wires, etc. Service as necessary. • Install breakout box, leave PCM disconnected. • Measure resistance between TP circuit at the TP sensor vehicle harness connector and Test Pin 47 at the breakout box. • **Is the resistance less than 5.0 ohms?**	Yes ▶ No ▶	GO to DH13. SERVICE open circuit. REMOVE breakout box. RECONNECT all components. RERUN Quick Test.

Pinpoint Test DH12

TEST STEP		RESULT ▶	ACTION TO TAKE
DH13	CHECK TP CIRCUIT FOR SHORTS TO GROUND		
	• Key off. • TP sensor disconnected. • Disconnect Powertrain Control Module (PCM). Inspect for damaged or pushed out pins, corrosion, loose wires, etc. Service as necessary. • Install breakout box, leave PCM disconnected. • Measure resistance between Test Pin 47 and Test Pins 40, 46, and 60 at the breakout box. • **Is each resistance greater than 10,000 ohms?**	Yes ▶ No ▶	REPLACE PCM. REMOVE breakout box. RECONNECT all components. RERUN Quick Test. SERVICE short circuit. REMOVE breakout box. RECONNECT all components. RERUN Quick Test.

Pinpoint Test DH13

TEST STEP		RESULT ▶	ACTION TO TAKE
DH20	ENGINE RUNNING SERVICE CODE 73/167: PERFORM PROPER DYNAMIC RESPONSE TEST AT WIDE OPEN THROTTLE		
	NOTE: **Engine Running Service Code 73/167 indicates the TP sensor did not exceed 25 percent of its rotation during the Dynamic Response Test. A complete wide open throttle must be performed during the Dynamic Response portion of the test.** • Run Key On Engine Running Self-Test. Be sure a complete WOT is performed during the Dynamic Response portion of the test. • **Is Code 73 or 167 still present?**	Yes ▶ No ▶	GO to DH21. Unable to duplicate Code 73/167 at this time. Go to Quick Test to service other Engine Running Codes. Otherwise, testing completed.

Pinpoint Test DH20

TEST STEP		RESULT ▶	ACTION TO TAKE
DH21	CHECK TP SENSOR MOVEMENT DURING DYNAMIC RESPONSE TEST		
	• Key off. • Disconnect Powertrain Control Module (PCM). Inspect for damaged or pushed outpins, corrosion, loose wires, etc. Service as necessary. • Install breakout box and connect PCM to breakout box. • Connect DVOM to Test Pin 47 and Test Pin 46 at the breakout box. • Run Key On Engine Running Self-Test with a proper WOT Dynamic Response portion of the test. • **Does voltage increase to greater than 3.5 volts during the Dynamic Response Test?**	Yes ▶ No ▶	REPLACE PCM. REMOVE breakout box. RERUN Quick Test. VERIFY TP sensor is properly installed to throttle body. If OK, REPLACE TP sensor. RERUN Quick Test.

Pinpoint Test DH21

TEST STEP		RESULT ▶	ACTION TO TAKE
DH90	CONTINUOUS MEMORY CODE 53/123: MONITOR TP CIRCUIT UNDER SIMULATED ROAD SHOCK		
	• Enter Key On Engine Off Continuous Monitor mode. • Observe VOM or STAR LED for indication of a fault while performing the following: — Move throttle slowly to WOT position. — Release throttle slowly to closed position and lightly tap on TP sensor (simulate road shock). — Wiggle TP harness connector. • **Does VOM or STAR LED indicate a fault?** 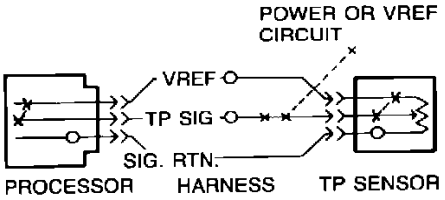 	Yes No	GO to DH91. GO to DH92.

Pinpoint Test DH90

TEST STEP		RESULT ▶	ACTION TO TAKE
DH91	MEASURE THROTTLE POSITION SIGNAL VOLTAGE WHILE EXERCISING TP SENSOR		
	• Key off. • Disconnect processor 60 pin connector. Inspect for damaged or pushed out pins, corrosion, loose wires, etc. Service as necessary. • Install breakout box and connect processor to breakout box. • VOM or STAR LED still connected to STO as in previous step. • Connect a DVOM from Test Pin 47 to Test Pin 46 at the breakout box. • Key on, engine off. • While observing DVOM, repeat Step DH90. • **Does the fault occur below 4.25 volts?**	Yes No	DISCONNECT and INSPECT connectors. If connector and terminals are good, REPLACE TP sensor, REFER to ENGINE SECTION CLEAR Continuous Memory. RERUN Quick Test. Throttle position sensor overtravel may have caused the Continuous Memory Code 53/123. VERIFY vehicle harness integrity, GO to DH92.

Pinpoint Test DH91

TEST STEP		RESULT ▶	ACTION TO TAKE
DH92	CHECK EEC-IV VEHICLE HARNESS		
	• Still in Key On Engine Off Continuous Monitor mode. • Observe VOM or STAR LED for a fault indication while performing the following: — Refer to the illustration in Step DH90. Grasp the vehicle harness close to the sensor connector. Wiggle, shake or bend a small section of the EEC-IV system vehicle harness while working your way to the dash panel. Also wiggle, shake or bend the EEC-IV vehicle harness from the dash panel to the processor. • **Does VOM or STAR LED indicate a fault?**	Yes No	ISOLATE fault. SERVICE as necessary. Refer to Schematic Diagrams CLEAR Continuous Memory RERUN Quick Test. GO to DH93.

Pinpoint Test DH92

TEST STEP		RESULT ▶	ACTION TO TAKE
DH93	CHECK PROCESSOR AND HARNESS CONNECTORS		
• Key off. • Disconnect processor 60 pin connector. Inspect for damaged or pushed out pins, corrosion, loose wires, etc. Service as necessary. • **Are connectors and terminals OK?**		Yes ▶ No ▶	SERVICE as necessary. CLEAR Continuous Memory. RERUN Quick Test. Unable to duplicate and / or identify fault at this time. For further diagnosis using the EEC-IV Monitor box, REFER to INTERMITTENT FAULT DIAGNOSIS All others, CLEAR Continuous Memory RERUN Quick Test.

Pinpoint Test DH93

TEST STEP		RESULT ▶	ACTION TO TAKE
DH94	CONTINUOUS MEMORY CODE 63 / 122: MONITOR TP CIRCUIT UNDER SIMULATED ROAD SHOCK		
• Enter Continuous Monitor mode. • Observe VOM or STAR LED for indication of a fault while performing the following: — Move throttle slowly to WOT position. — Release throttle slowly to closed position. — Lightly tap on TP sensor (simulate road shock). — Wiggle TP harness connector. • **Does VOM or STAR LED indicate a fault?**		Yes ▶ No ▶	Key Off INSPECT connectors. If connectors and terminals are good, REPLACE TP sensor, REFER to FUEL SECTION, CLEAR Continuous Memory. RERUN Quick Test. GO to DH95.

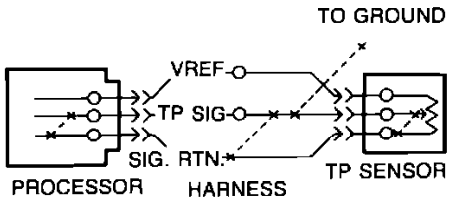

Pinpoint Test DH94

TEST STEP		RESULT ▶	ACTION TO TAKE
DH95	CHECK EEC-IV VEHICLE HARNESS		
• Still in Key On Engine Off Continuous Monitor mode. • Observe VOM or STAR LED for a fault indication while performing the following: — Refer to the illustration in Step DH94. Grasp the vehicle harness close to the sensor connector. Wiggle, shake or bend a small section of the EEC-IV system vehicle harness while working your way to the dash panel. Also wiggle, shake or bend the EEC-IV vehicle harness from the dash panel to the processor. • **Does VOM or STAR LED indicate a fault?**		Yes ▶ No ▶	ISOLATE fault. SERVICE as necessary. CLEAR Continuous Memory. RERUN Quick Test. GO to DH96.

Pinpoint Test DH95

TEST STEP		RESULT ▶	ACTION TO TAKE
DH96	CHECK PROCESSOR AND HARNESS CONNECTORS		
	• Key off. • Disconnect processor 60 pin connector. Inspect for damaged or pushed out pins, corrosion, loose wires, etc. • **Are connectors and terminals OK?**	No ▶	SERVICE as necessary. CLEAR Continuous Memory. RERUN Quick Test.
		Yes ▶	Unable to duplicate and/or identify fault at this time. For further diagnosis using the EEC-IV Monitor box, REFER to INTERMITTENT FAULT DIAGNOSIS. All others, CLEAR Continuous Memory RERUN Quick Test.

Pinpoint Test DH96

DP - Testing Notes

NOTE: You should enter this Pinpoint Test only when you have been directed here from Quick Test or Pinpoint Test TG.

REMEMBER

This Pinpoint Test is intended to diagnose only the following:

- VSS Harness circuits

- Vehicle Speed Sensor

- Processor assembly

DESCRIPTION

The Vehicle Speed Sensor **(VSS)** is a variable reluctance sensor that generates a waveform with a frequency that is proportional to vehicle speed. When the vehicle is moving slowly, the sensor produces a low frequency signal. As the vehicle speed increases, the sensor produces a higher frequency signal. The processor uses this signal to control fuel injection, ignition timing and transmission/transaxle shift points.

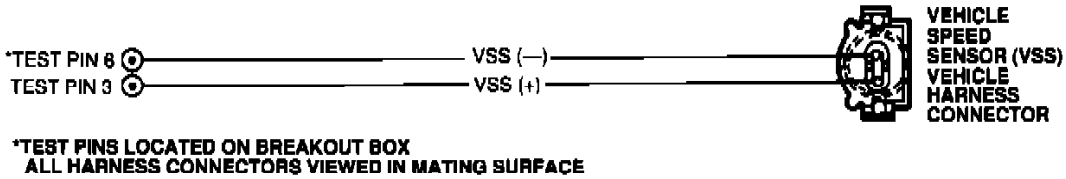

Test Pin 3—VSS (+)

Application	Wire Color
1.9L Escort/Tracer	W/BK
2.0L SFI MA Probe	O
Car: 2.3L Mustang 3.8L Continental 4.6L Crown Victoria/Grand Marquis, Town Car, Mark VIII 5.0L Mustang Truck: 2.3L Ranger 3.0L SFI MA Ranger 4.0L Explorer/Ranger	GY/BK
All Others	DG/W

Test Pin 6—VSS (-)

Application	Wire Colors
1.9L Escort/Tracer	BL
2.0L SFI MA Probe	O/BK
4.6L Town Car	BK/LB
3.8L Thunderbird/Cougar 3.8L SC Thunderbird 5.0L Thunderbird/Cougar	GY/R
Car: 2.3L Tempo/Topaz 3.0L Tempo/Topaz 3.0L Taurus/Sable 3.0L SHO Taurus 3.2L SHO Taurus 3.8L Taurus/Sable	O/Y
All Others	PK/O

Schematic Diagram

TEST STEP		RESULT ▶	ACTION TO TAKE
DP1	CONTINUOUS MEMORY CODES 29/452: COMPLETE VSS DRIVE CYCLE: VERIFY CODE OR DRIVE COMPLAINT		
	Continuous Memory Code 29 or 452 indicates that sometime during the last 40 or 80 warm-up cycles, the processor detected an error in the vehicle speed sensor output signal. Possible causes: — Damaged vehicle speed sensor. — Damaged harness circuits. — Damaged processor. ● Perform Vehicle Speed Sensor Drive Cycle at least three times as outlined below. **VEHICLE SPEED SENSOR (VSS) DRIVE CYCLE:** — Record and clear continuous memory codes. — Warm engine to operating temperature. **AUTOMATIC TRANSMISSIONS:** — Place gear selector in DRIVE range. — Obey all local traffic laws. Accelerate heavily to 35 mph. — Coast down to an idle and stop the vehicle. — Shut the engine off. — After the drive cycle is completed, run Key On Engine Off Self-Test and record the continuous memory service codes displayed. **MANUAL TRANSMISSIONS:** — From first gear, shift to second. — Obey all local traffic laws. Accelerate moderately to 40 mph. — Coast down to an idle and stop the vehicle. — Shut the engine off. — After the drive cycle is completed, run Key On Engine Off Self-Test and record the continuous memory service codes displayed. ● **All others, did Continuous Memory Code 29 or 452 repeat?**	Yes ▶ No ▶	GO to DP2. Unable to duplicate and/or identify fault at this time. For further diagnosis using the EEC-IV monitor box, REFER to Intermittent Fault Diagnosis. All others, CLEAR Continuous Memory

Pinpoint Test DP1

TEST STEP		RESULT ▶	ACTION TO TAKE
DP2	CHECK CONTINUITY OF VEHICLE SPEED SENSOR HARNESS CIRCUITS		
	● Key off. ● Disconnect processor 60 pin connector. Inspect for damaged or pushed out pins, corrosion, loose wires, etc. Service as necessary. ● Install breakout box, processor disconnected. ● Disconnect vehicle speed sensor. ● Measure resistance between Test Pin 3 at the breakout box and VSSDIF (+) circuit at the vehicle speed sensor vehicle harness connector. ● Measure resistance between Test Pin 6 at the breakout box and VSSDIF (-) circuit at the vehicle speed sensor vehicle harness connector. ● **Is each resistance less than 5.0 ohms?**	Yes ▶ No ▶	GO to DP3. SERVICE open circuit. REMOVE breakout box. RECONNECT all components. REPEAT Test Step DP1 to verify elimination of code or drive complaint.

Pinpoint Test DP2

TEST STEP		RESULT ▶	ACTION TO TAKE
DP3	CHECK VSS SIGNAL HARNESS CIRCUITS FOR SHORTS TO POWER OR GROUND		
	• Key off. • VSS disconnected. • Breakout box installed, PCM disconnected. • Measure resistance between Test Pin 3 and Test Pins 6, 37 and 40 at the breakout box. • **Is each resistance greater than 500 ohms?**	Yes ▶ No ▶	RECONNECT the PCM. GO to DP4. SERVICE short circuit. REMOVE breakout box. RECONNECT all components. REPEAT Test Step DP1 to verify elimination of DTC or the drive complaint.

Pinpoint Test DP3

TEST STEP		RESULT ▶	ACTION TO TAKE
DP4	CHECK VEHICLE SPEED SENSOR RESISTANCE		
	• Key off. • Vehicle speed sensor disconnected. • Measure the resistance of the vehicle speed sensor. • **Is resistance between 190 and 250 ohms?**	Yes ▶ No ▶	REMOVE breakout box. REPLACE processor. RECONNECT the vehicle speed sensor. REPEAT Test Step DP1 to verify elimination of code or drive complaint. REPLACE the vehicle speed sensor. REMOVE breakout box. REPEAT Test Step DP1 to verify the elimination of the code or drive complaint.

Pinpoint Test DP4

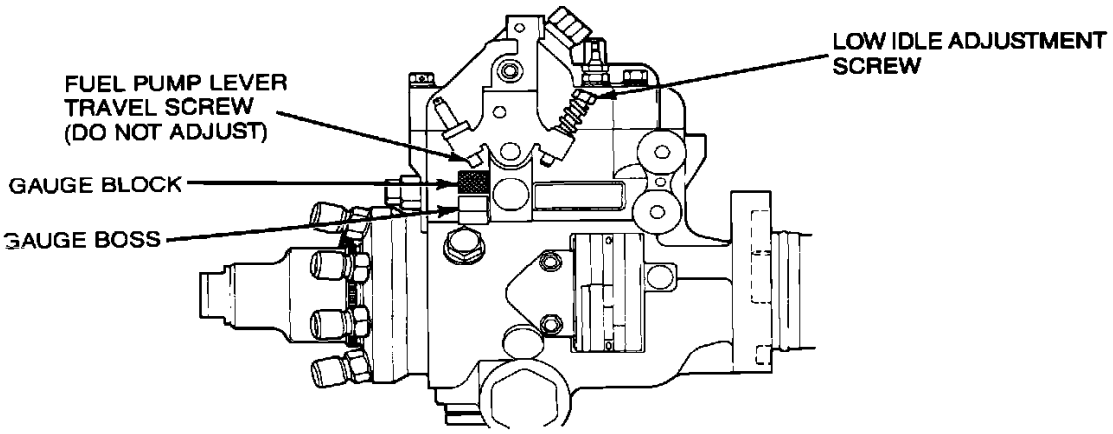

Fuel Pump

DR - Testing Notes

NOTE: You should enter this Pinpoint Test only when you have been directed here from Quick Test.

REMEMBER

This Pinpoint Test is intended to diagnose only the following:

- Harness circuits: CID (+), CID (-), CID, SIG RTN

- CID Sensor

- Processor assembly

DESCRIPTION

The EEC-IV processor uses CID sensor information for fuel injection synchronization.

TEST STEP		RESULT ▶	ACTION TO TAKE
DR1	CONTINUOUS MEMORY CODE 214: WILL ENGINE START?		
	Continuous Memory Service Code 214 indicates an error has been detected in the Cylinder Identification (CID) sensor input signal. The error could be due to a "hard fault" or an intermittent condition. Possible causes: — Open or shorted harness. — Damaged CID/Camshaft/Crankshaft sensor. — Damaged DIS module (if equipped). — Damaged processor. • **Will engine start?**	Yes ▶ No ▶	GO to DR2. **For 2.0L Probe:** GO to DR10. **All others:** GO to IGNITION SYSTEM FOR Ignition Diagnostics.

Pinpoint Test DR1

TEST STEP		RESULT ▶	ACTION TO TAKE
DR2	CLEAR AND ATTEMPT TO RE-GENERATE CODE 214		
	• Clear Continuous Memory • Start engine. • Increase rpm to greater than 1500 rpm for 10 seconds. Repeat two times. • Key off. • Rerun Key On Engine Off Self-Test • **Is Continuous Memory Code 214 present?**	Yes ▶ No ▶	GO to DR3. Service Code 214 is intermittent. GO to DR20.

Pinpoint Test DR2

TEST STEP		RESULT ▶	ACTION TO TAKE
DR3	CHECK CID CIRCUIT CONTINUITY TO PCM		
	• Key off. • Disconnect Powertrain Control Module (PCM). Inspect for damaged or pushed out pins, corrosion, loose wires, etc. Service as necessary. • Install breakout box. Leave PCM disconnected. • Disconnect Camshaft Position (CMP) sensor or Crankshaft Position (CKP) sensor (refer to DR for proper sensor test pin number and sensor location). • Measure resistance between the CID/CID(+) Signal Test Pin at the breakout box and the CID/CID(+) circuit at the CMP or CKP sensor vehicle harness connector. **For Tempo/Topaz, Crown Victoria/Grand Marquis, Mark VIII and Town Car:** — Also measure resistance between Test Pin 46 and SIG RTN circuit at the CMP sensor vehicle harness connector. **For Taurus (FF) and 4.0L Ranger/Explorer:** — Also measure resistance between Test Pin 40 and PWR GND circuit at the CMP sensor vehicle harness connector. **For Escort/Tracer:** — Also measure resistance between Test Pin 42 and CID(-) circuit at the CMP sensor vehicle harness connector. • **Is each resistance less than 5.0 ohms?**	Yes ▶ No ▶	GO to DR4. SERVICE open circuit. REMOVE breakout box. RECONNECT all components. RERUN Quick Test.

Pinpoint Test DR3

TEST STEP		RESULT ▶	ACTION TO TAKE
DR4	CHECK CID CIRCUIT FOR SHORT TO POWER		
	• Key off. • Breakout box installed, PCM disconnected. • CMP or CKP sensor disconnected. • Disconnect STAR Tester (if applicable). NOTE: **For proper results of this test, the STAR Tester must be disconnected. Due to the circuitry of the STAR Tester and the vehicle, a CID signal short to SIG RTN could appear as a CID short to power.** **For Mustang, Taurus SHO, Thunderbird and 2.3L Ranger:** — Disconnect ICM Pins 1-6. • Key on. • Measure voltage between the CID / CID(+) Signal Test Pin and Test Pin 40 at the breakout box. • **Is voltage less than 1.0 volt?**	Yes ▶ No ▶	Key off. GO to DR5. SERVICE short to power. REMOVE breakout box. RECONNECT all components. RERUN Quick Test.

Pinpoint Test DR4

TEST STEP		RESULT ▶	ACTION TO TAKE
DR5	CHECK CID CIRCUIT FOR SHORT TO GROUND		
	• Key off. • Breakout box installed, PCM disconnected. • CMP or CKP sensor disconnected. • ICM (Pins 1-6) disconnected (if applicable). • Measure resistance between the CID / CID(+) Signal Test Pin and Test Pins 16, 40 and 46 at the breakout box. **For Escort / Tracer:** — Also measure resistance between Test Pin 41 and Test Pin 42 at the breakout box. • **Is each resistance greater than 10,000 ohms?**	Yes ▶ No ▶	**For Mustang, Taurus SHO, Thunderbird SC and 2.3L Ranger:** RECONNECT all components. GO to ignition system. **For Taurus (FF) and 4.0L Ranger, Explorer:** GO to DR6. **For all others:** GO to DR7. SERVICE short circuit. REMOVE breakout box. RECONNECT PCM. RERUN Quick Test.

Pinpoint Test DR5

TEST STEP		RESULT ▶	ACTION TO TAKE
DR6	CHECK VPWR CIRCUIT VOLTAGE		
	• Breakout box installed, PCM disconnected. • CMP sensor disconnected. • Key on, engine off. • Measure voltage between VPWR circuit at CMP sensor vehicle harness connector and battery negative post. • **Is voltage greater than 10.5 volts?**	Yes ▶ No ▶	GO to DR7. SERVICE open in VPWR circuit. REMOVE breakout box. RECONNECT all components. RERUN Quick Test.

Pinpoint Test DR6

TEST STEP	RESULT ▶	ACTION TO TAKE
DR7 CHECK FOR SHORTS IN PCM		
• Key off. • Breakout box installed. • Connect PCM to breakout box. • CMP or CKP sensor disconnected. **For Escort/Tracer:** — Measure resistance between Test Pin 41 and Test Pins 42, 37, 57, 40 and 60 at the breakout box. **All others:** — Measure resistance between Test Pin 24 and Test Pins 37, 57, 40, 46 and 60 at the breakout box. • **Is each resistance greater than 500 ohms?**	Yes ▶ No ▶	GO to DR8. REPLACE PCM. REMOVE breakout box. RECONNECT all components. RERUN Quick Test.

Pinpoint Test DR7

TEST STEP	RESULT ▶	ACTION TO TAKE
DR8 CHECK CMP OR CKP SENSOR OUTPUT		
• Key off. • Breakout box installed, PCM connected. • Reconnect CMP or CKP sensor. • DVOM on AC scale (to monitor less than 5.0 volts). **For Escort/Tracer** — Measure voltage between Test Pins 41 and 42 at the breakout box while varying engine rpm. **For all others:** — Measure voltage between Test Pins 24 and 40 at the breakout box while varying engine rpm. • **Does AC voltage vary greater than 0.1 volt AC?**	Yes ▶ No ▶	**For 4.0L Ranger/Explorer:** VERIFY that the Camshaft Position (CMP) sensor is installed and aligned correctly. If OK, REPLACE PCM. REMOVE breakout box. RECONNECT all components. RERUN Quick Test. **All Others:** REPLACE PCM REMOVE breakout box. RECONNECT all components. RERUN Quick Test. REPLACE CMP or CKP sensor. REMOVE breakout box. RECONNECT all components. RERUN Quick Test.

Pinpoint Test DR8

TEST STEP	RESULT ▶	ACTION TO TAKE
DR10 CHECK FOR VPWR TO CRANK ANGLE SENSOR		
• Key off. • Disconnect crank angle sensor. • Key on, engine off. • Measure voltage between the VPWR circuit at the crank angle sensor vehicle harness connector and the battery negative post. • **Is voltage greater than 10.5 volts?** 2.0L PROBE CRANK ANGLE SENSOR VEHICLE HARNESS CONNECTOR (LOCATED AT DISTRIBUTOR) 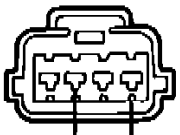 FROM EEC POWER RELAY ← VPWR CID (24)	Yes ▶ No ▶	RECONNECT crank angle sensor. Refer to Ignition System Diagnosis SERVICE open VPWR circuit between crank angle sensor and power relay. RECONNECT crank angle sensor. RERUN Quick Test.

Pinpoint Test DR10

TEST STEP	RESULT	ACTION TO TAKE
DR20 CHECK CID WIRING • Enter Engine Running Continuous Monitor Mode • Observe VOM or STAR LED for a fault indication while performing the following: **CAUTION: While performing this test, do not touch any moving engine parts.** — Shake, wiggle, bend the Cylinder Identification (CID) wiring from the EEC-IV processor to as close as possible to the CID sensor. — If possible, lightly tap on the CID sensor/connector (to simulate road shock). • **Is a fault indicated?**	Yes ▶ No ▶	ISOLATE fault and SERVICE as necessary. CLEAR Continuous Memory RERUN Quick Test. Key off. For further diagnosis using the EEC-IV monitor box, GO to INTERMITTENT FAULT DIAGNOSIS If an EEC-IV monitor box is not available, GO to **DR21**.

Pinpoint Test DR20

DR21 - Road Test

The purpose of the road test is to identify an area of concern by monitoring certain controlled parameters while trying to re-create a driveability or MIL light symptom.

Note

A basic working knowledge of the EEC-IV system is critical to effectively analyze road test data.

WARNING

THIS ROAD TEST IS A SUGGESTED BUT OPTIONAL PROCEDURE. ALL APPLICABLE SAFETY PROCEDURES AND TRAFFIC LAWS MUST BE FOLLOWED. IN ORDER FOR A ROAD TEST TO BE PERFORMED IT IS REQUIRED THAT ANOTHER PERSON ACCOMPANY THE DRIVER. THE ACCOMPANYING PERSON CAN MAKE MEASUREMENTS, OBSERVE CHANGES AND RECORD NOTES. IF FOR SOME REASON THIS TEST IS NOT PERFORMED, RETURN TO DIAGNOSTIC ROUTINES FOR OTHER POSSIBLE CAUSES.

Prepare Vehicle For a Road Test

- Breakout box installed, processor connected.
- Install fuel pressure gauge and MAP/BP tester (optional).

Preliminary Power/Ground Checks

- With the key ON and a DVOM referenced to the battery negative post, check the following signals for correct values.

POWERS: KAPWR > 10.5V (Pin 1), VPWR > 10.5V (Pins 37/57), VREF 5 ± 1V (Pin 26).
GROUNDS (all = 0 ± .5V): PWR GND (Pins 40/60), SIG RTN (Pin 46), IGN GND (Pin 16).
OPTIONAL GROUNDS: HEGO GND (Pin 49), CSE GND (Pin 20), MAF RTN (Pin 9 or 15).

Obtaining Other Needed Information and Materials Before the Road Test

- Refer to the Diagnosis by Symptom charts for more diagnostic help , looking at the chart(s) that most resembles the vehicle's driveability or MIL light symptom. Before the road test perform the Visual/Mechanical Checks that are listed. Next, list the EEC-IV sensors and actuators in the order given. These circuits, along with the CID signal(s), are the main circuits that will be monitored.
- Refer to the Specifications . Although these charts were designed for use with the EEC-IV Monitor Box, most of the values can be read using the breakout box and a DVOM (with the DVOM referenced to ground all values in DCV units can be used; other values may also be helpful, ex., MAP Hz using the MAP/BP tester).

Pinpoint Test DR21

- After starting the engine for the road test, enter Engine Running Continuous Monitor Mode
- Drive the vehicle to create the conditions so that the symptom will occur. If the Customer Information Worksheet has been completed, this information may help when trying to re-create the symptom.
- When the symptom occurs, the accompanying passenger should observe changes in listed EEC-IV signals. Information about the symptom, operating condition value of the EEC-IV signal or other notes should be recorded onto paper.
- If you are unable to duplicate the symptom, it may still be helpful to verify that the EEC-IV values are in the expected range.

Analyzing the Data

- Once the road test is completed, the results need to be analyzed to locate and service the exact fault which caused the symptom (if, for example, a Continuous Memory Code 214 is set again and the CID signal stayed within specification, the processor would be suspect; if the signal went out of specification, harness or sensor would be suspect).

Pinpoint Test DR21

DS - Testing Notes

NOTE: You should enter this Pinpoint Test only when you have been directed here from Quick Test.

REMEMBER

To prevent the replacement of good components, be aware that the following non-EEC areas may be at fault.

- Vehicle Speed Control system
- Rear Anti-Lock Brake system
- Ring gear inside differential
- Instrumentation system

This Pinpoint Test is intended to diagnose only the following:

- PSOM output to the processor
- Harness circuits: PSOM(+), PSOM(-)
- Processor assembly

DESCRIPTION

The Programmable Speedometer/Odometer **(PSOM)** receives inputs from the Rear Anti-Lock Brake System **(RABS)** Speed Sensor, which is mounted on the rear axle differential. The PSOM takes the input signal information to the Speed Control module and the EEC-IV processor.

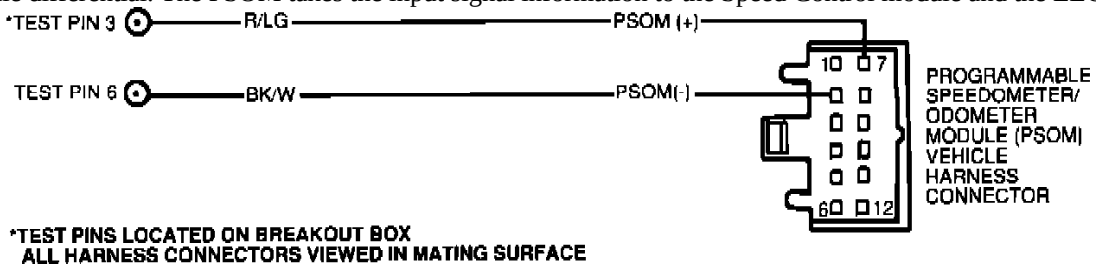

Speedometer/Odometer Module

TEST STEP		RESULT ▶	ACTION TO TAKE
DS1	SERVICE CODE 29/452: CHECK PSOM RESISTANCE		
	Continuous Memory Code 29 indicates that during the last 80 warm-up cycles, (Continuous Memory Code 452 indicates that during the last 40 warm-up cycles), the processor detected an error in the PSOM output signal. Possible Causes: — Damaged Rear Anti-Lock Brake System (RABS). — Damaged PSOM. — Damaged harness circuits. — Damaged processor. • Key off. • Disconnect processor 60-pin connector. Inspect for damaged or pushed out pins, corrosion, loose wires, etc. Service as necessary. • Install breakout box, leave processor disconnected. • Measure resistance between Test Pin 3 and Test Pin 6 at the breakout box. • **Is resistance between 21,000 and 55,000 ohms?**	Yes ▶ No ▶	GO to DS4. GO to DS2.

Pinpoint Test DS1

TEST STEP		RESULT ▶	ACTION TO TAKE
DS2	CHECK CONTINUITY OF THE HARNESS CIRCUITS		
	• Key off. • Breakout box installed, PCM disconnected. • Disconnect PSOM. • Measure resistance between Test Pin 3 at the breakout box and PSOM(+) circuit at the PSOM vehicle harness connector. • Measure resistance between Test Pin 6 at the breakout box and PSOM(-) circuit at the PSOM vehicle harness connector. • **Is each resistance less than 5.0 ohms?**	Yes ▶ No ▶	GO to DS3. SERVICE open circuit. REMOVE breakout box. RECONNECT all components. RERUN Quick Test.

Pinpoint Test DS2

TEST STEP		RESULT ▶	ACTION TO TAKE
DS3	CHECK HARNESS CIRCUITS FOR SHORTS TO POWER AND GROUND		
	• Key off. • Breakout box installed, processor disconnected. • PSOM disconnected. • Measure resistance between Test Pin 3 and Test Pins 6, 37 and 40 at the breakout box. • **Is each resistance greater than 10,000 ohms?**	Yes ▶ No ▶	GO to DS4. SERVICE open circuit. REMOVE breakout box. RECONNECT all components. RERUN Quick Test.

Pinpoint Test DS3

TEST STEP		RESULT ▶	ACTION TO TAKE
DS4	CHECK RABS SENSOR RESISTANCE		
	• Key off. • RABS disconnected. • Measure the resistance of the RABS. • **Is resistance between 1300 and 1550 ohms?**	Yes ▶ No ▶	GO to DS5. REPLACE the RABS. REMOVE breakout box. RECONNECT all components. RERUN Quick Test.

Pinpoint Test DS4

TEST STEP		RESULT	ACTION TO TAKE
DS5	CHECK PSOM OUTPUT VOLTAGE		
	WARNING: THIS TEST STEP REQUIRES ANOTHER PERSON TO ACCOMPANY THE DRIVER TO MAKE MEASUREMENTS AND RECORD DATA. ALL APPLICABLE SAFETY PROCEDURES AND TRAFFIC LAWS MUST BE FOLLOWED. • Key off. • Breakout box installed. • Reconnect PCM to breakout box. • Reconnect PSOM. • DVOM on 20 volt AC scale. • Warm engine to operating temperature. • Measure AC voltage between Test Pin 3 and Test Pin 6 while gradually increasing vehicle speed to 50 mph. • **Is the maximum voltage received greater than 4.5 volts?**	Yes No	REPLACE PCM. REMOVE breakout box. RERUN Quick Test. REMOVE breakout box. RECONNECT components. REFER to body electrical for further diagnosis.

Pinpoint Test DS5

FD - Testing Notes

NOTE: You should enter this Pinpoint Test only when you have been directed here from Quick Test.

REMEMBER

This Pinpoint Test is intended to diagnose only the following:

- BOO circuit

- Processor assembly

DESCRIPTION

The Brake On/Off **(BOO)** input is wired to the stoplamp circuit and informs the processor when the brake is applied. The BOO input is used primarily by the converter clutch lock/unlock strategy.

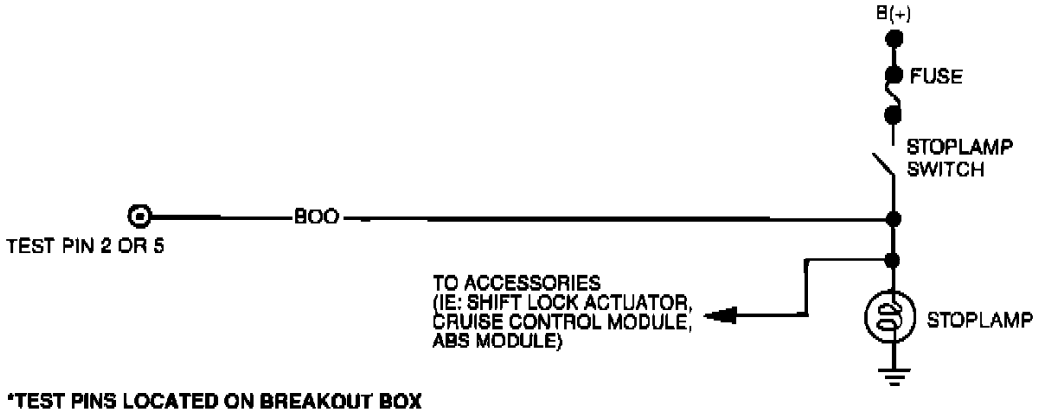

BOO

Application	Test Pin Number
Taurus SHO Escort/Tracer	5
All Others	2

BOO

Application	Wire Color
Taurus/Sable	R/LG
Escort/Tracer	GR
All Others	LG

Schematic Diagram

TEST STEP		RESULT ▶	ACTION TO TAKE
FD1	SERVICE CODE 74/536 VERIFY BRAKE WAS PRESSED		
	Service Code 74/536 indicates that when the brake pedal was depressed and released during the Engine Running Self-Test, the BOO signal did not cycle high and low. Possible causes: — Brake pedal not depressed and released during the Engine Running Self-Test. — Brake pedal depressed during entire Engine Running Self-Test. — Open BOO/stoplamp circuit. — Short to GROUND or POWER. — Damaged brake switch. — Damaged processor. • **Did you press brake during the Engine Running Self-Test?** NOTE: **On some vehicles it is necessary to depress and release the brake after the Dynamic Response Code 1(0) but before the brief WOT.**	Yes ▶ No ▶	GO to FD2. RERUN Engine Running Self-Test. PRESS brake once during test.

Pinpoint Test FD1

TEST STEP		RESULT ▶	ACTION TO TAKE
FD2	CHECK OPERATION OF STOPLAMPS		
	• Key on. • Check stoplamp operation.	Stoplamps operate normally ▶ Stoplamps never on ▶ Stoplamps always on ▶	GO to FD3. GO to FD4. GO to FD5.

Pinpoint Test FD2

TEST STEP		RESULT ▶	ACTION TO TAKE
FD3	CHECK FOR BOO CIRCUIT CYCLING		
	• Key off. • Disconnect processor 60 pin connector. Inspect for damaged or pushed out pins, corrosion, loose wires, etc. Service as necessary. • Install breakout box, leave processor disconnected. • DVOM on 20 volt scale. • Measure voltage between BOO Test Pin and Test Pin 40 at the breakout box while depressing and releasing brake. • **Does the voltage cycle?**	Yes ▶ No ▶	REPLACE processor. REMOVE breakout box. RERUN Quick Test. SERVICE open in BOO circuit between processor and BOO connection to stoplamp circuit. RERUN Quick Test.

Pinpoint Test FD3

TEST STEP		RESULT ▶	ACTION TO TAKE
FD4	CHECK FOR POWER TO BRAKE SWITCH		
	NOTE: **Verify integrity of related fuses in fuse panel and condition of stoplamp bulbs.** • Key off. • Disconnect brake switch (located on brake pedal). • Measure voltage between BATT (+) input to brake switch and chassis ground. • **Is voltage greater than 10 volts?**	Yes ▶ No ▶	VERIFY operation of brake switch. If OK, SERVICE open circuit between brake switch and stoplamp ground. RECONNECT brake switch connector. RERUN Quick Test. SERVICE open BATT (+) circuit to brake switch. RECONNECT brake switch connector. RERUN Quick Test.

Pinpoint Test FD4

TEST STEP		RESULT ▶	ACTION TO TAKE
FD5	VERIFY BRAKE SWITCH IS NOT ALWAYS CLOSED		
	• Key off. • Disconnect brake switch (located on brake pedal). • Key on, engine off. • **Are stoplamps still on?**	Yes ▶ No ▶	GO to FD6. VERIFY proper installation of brake switch. If OK, REPLACE brake switch. RECONNECT harness connector. RERUN Quick Test.

Pinpoint Test FD5

TEST STEP		RESULT ▶	ACTION TO TAKE
FD6	CHECK FOR SHORT TO POWER IN PCM		
	• Key off. • Brake switch disconnected. • Disconnect Powertrain Control Module (PCM). • Key on, engine off. • **Are stoplamps still on?**	Yes ▶ No ▶	GO to FD7 REPLACE PCM. RECONNECT brake switch. RERUN Quick Test.

Pinpoint Test FD6

TEST STEP		RESULT ▶	ACTION TO TAKE
FD7	CHECK FOR SHORT TO POWER IN SHIFTLOCK ACTUATOR		
	• Key off. • PCM disconnected. • Brake switch disconnected. • Disconnect shiftlock actuator, cruise control module and ABS module (if equipped) to isolate brake switch wiring. • Key on, engine off. • **Are stoplights still on?**	Yes ▶ No ▶	SERVICE short to power in BOO / Stoplamp circuit. RECONNECT PCM, brake switch and accessories. RERUN Quick Test. SERVICE short in accessories (i.e., shiftlock actuator, ABS module, etc). RECONNECT all components. RERUN Quick Test.

Pinpoint Test FD7

TEST STEP		RESULT ▶	ACTION TO TAKE
FD90	CONTINUOUS MEMORY CODE 536: CHECK FOR PROPER STOPLAMP SWITCH INSTALLATION		
	Continuous Memory Code 536 indicates a BOO circuit failure. If the BOO input does not cycle after a predetermined number of transitions from 0 mph to a specific speed, the BOO input is assumed to be damaged and Continuous Memory Code 536 is set. Possible causes: — Stoplamp switch improperly installed. — Open stoplamp / BOO circuit. — Stoplamp / BOO circuit shorted to power. — Damaged stoplamp switch. — Damaged stoplamp ground connection. • Check stoplamp switch for proper installation (alignment with pedal), corrosion, frayed wires, etc. • **Is stoplamp switch in good condition and properly installed?**	Yes ▶ No ▶	GO to FD91. SERVICE as necessary. CLEAR Continuous Memory RERUN Quick Test.

Pinpoint Test FD90

TEST STEP		RESULT ▶	ACTION TO TAKE
FD91	CHECK STOPLAMP GROUND		
	• Check stoplamp ground connection for corrosion or other damage. • Check stoplamp connector and wires for corrosion or other damage. • **Are stoplamp wires, connector, and ground connection OK?**	Yes ▶ No ▶	GO to FD92. SERVICE as necessary. CLEAR Continuous Memory RERUN Quick Test.

Pinpoint Test FD91

TEST STEP		RESULT ▶	ACTION TO TAKE
FD92	CHECK STOPLAMP / BOO CIRCUITS FOR SHORT TO POWER		
	• Key on, engine off. • Brake pedal NOT depressed. • Wiggle stoplamp / BOO circuit wires and connectors while observing stoplamps. • **Do stoplamps flash on while wiggling?**	Yes ▶ No ▶	ISOLATE short to power and SERVICE as necessary. CLEAR Continuous Memory RERUN Quick Test. GO to FD93.

Pinpoint Test FD92

TEST STEP		RESULT ▶	ACTION TO TAKE
FD93	CHECK STOPLAMP CIRCUIT CONTINUITY		
	• Key off. • Depress brake pedal and hold. • Wiggle stoplamp circuit wires and connectors while observing stoplamps. • Lightly tap stoplamp switch (simulate road shock) while observing stoplamps. • **Do stoplamps ever go off?**	Yes ▶ No ▶	ISOLATE open in stoplamp circuit and SERVICE as necessary. CLEAR Continuous Memory RERUN Quick Test. GO to FD94.

Pinpoint Test FD93

TEST STEP		RESULT	ACTION TO TAKE
FD94	CHECK BOO CIRCUIT CONTINUITY		
	• Key off. • Release brake pedal. • Disconnect processor 60 pin connector. Inspect for damaged or pushed out pins, corrosion, loose wires, etc. Service as necessary. • Install breakout box, leave processor disconnected. • Connect DVOM between BOO Test Pin (refer to schematic) at the breakout box and stoplamp circuit at the stoplamp switch. • DVOM on 200 ohm scale. • Wiggle BOO circuit wires and connectors while observing DVOM. • **Is resistance ever greater than 5.0 ohms while wiggling?**	Yes ▶ No ▶	ISOLATE open in BOO circuit and SERVICE as necessary. REMOVE breakout box. RECONNECT processor. RERUN Quick Test. For further diagnosis using the EEC-IV monitor box, GO to intermittent fault diagnosis. If an EEC-IV monitor box is not available, GO to FD99.

Pinpoint Test FD94

FD99 - Road Test

The purpose of the road test is to identify an area of concern by monitoring certain controlled parameters while trying to re-create a driveability or MIL symptom.

Note

A basic working knowledge of the EEC-IV system is critical to effectively analyze road test data.

WARNING

THIS ROAD TEST IS A SUGGESTED BUT OPTIONAL PROCEDURE. ALL APPLICABLE SAFETY PROCEDURES AND TRAFFIC LAWS MUST BE FOLLOWED. IN ORDER FOR A ROAD TEST TO BE PERFORMED IT IS REQUIRED THAT ANOTHER PERSON ACCOMPANY THE DRIVER. THE ACCOMPANYING PERSON CAN MAKE MEASUREMENTS, OBSERVE CHANGES AND RECORD NOTES. IF FOR SOME REASON THIS TEST IS NOT PERFORMED, RETURN TO DIAGNOSTIC ROUTINES FOR OTHER POSSIBLE CAUSES.

Prepare Vehicle for a Road Test

- Breakout box installed, processor connected.
- Install fuel pressure gauge and MAP / BP tester (optional).
- Other materials needed; DVOM, pencil, paper, appropriate schematic / pin usage sheet

Preliminary Power / Ground Checks

- With the key ON and a DVOM referenced to the battery negative post, check the following signals for correct values.

POWERS: KAPWR > 10.5V (Pin 1), VPWR > 10.5V (Pins 37 / 57), VREF 5 ± 1V (Pin 26).
GROUNDS (all = 0 ± .5V): PWR GND (Pins 40 / 60), SIG RTN (Pin 46), IGN GND (Pin 16).
OPTIONAL GROUNDS: HEGO GND (Pin 49), CSE GND (Pin 20), MAF RTN (Pin 9 or 15).

Obtaining Other Needed Information and Materials Before the Road Test

- Refer to the Diagnosis by Symptom Charts. Looking at the Diagnosis by Symptom Chart(s) that most resembles the vehicle's driveability or MIL symptom. Before the road test perform the Visual / Mechanical Checks that are listed. Next, list the EEC-IV sensors and actuators in the order given. These circuits, along with the BOO signal, are the main circuits that will be monitored.
- Refer to the proper Diagnostic Reference Value Sheet. Although these charts were designed for use with the EEC-IV monitor box, most of the values can be read using the breakout box and a DVOM (with the DVOM referenced to ground all values in DCV units can be used; other values may also be helpful, ex., MAP Hz using the MAP / BP tester).

Pinpoint Test FD99

- The use of test lamps may also aid diagnosis. For example, a test lamp could be connected at the stop lamp switch between BATT (+) and ground, with another connected between the "power to bulbs" pin and ground. The BATT (+) lamp should always stay on, with the "power to bulbs" lamp on only when the brake is depressed. Also, with a DVOM connected between the BOO Test Pin and Test Pin 40 at the breakout box, if 6-7 volts is shown with the brake pedal released, this could indicate an open circuit between the processor and stop lamp ground (the processor supplies 6-7 volts on the BOO circuit, but this voltage is not "strong" enough to light the stoplamps or most test lamps).

Road Test

- After starting the engine for the road test, enter Engine Running Continuous Monitor Mode
- Drive the vehicle to create the conditions so that the symptom will occur. If the Customer Information Worksheet has been completed, this information may help when trying to re-create the symptom.
- When the symptom occurs, the accompanying passenger should observe changes in listed EEC-IV signals. Information about the symptom, operating condition value of the EEC-IV signal or other notes should be recorded onto paper.
- If you are unable to duplicate the symptom, it may still be helpful to verify that the EEC-IV values are in the expected range.

Analyzing the Data

- Once the road test is completed, the results need to be analyzed to locate and service the exact fault which caused the symptom.
- If no problem is identified, return to DIAGNOSTIC ROUTINES for other possible causes of the symptom.

Pinpoint Test FD99

FE - Testing Notes

NOTE: You should enter this Pinpoint Test only when you have been directed here from Quick Test.

REMEMBER

This Pinpoint Test is intended to diagnose only the following:

- Blower motor (BLR) input circuit.
- Daytime Running Lights (DRL) input circuit.
- Headlamp (HDL) input circuit
- Rear window defrost (DEF) input circuit
- Processor assembly

DESCRIPTION

Input Logic:

INPUT	OFF STATE	ON STATE
Blower motor	Position 1 or 2: Between 10 and 17 volts	Position 3 or 4: Less than 1.5 volts
Daytime running lamps	Between 10 and 17 volts	Less than 1.5 volts
Headlamps	Less than 1.5 volts	Between 10 and 17 volts
Rear window defroster	Between 10 and 17 volts	Less than 3.0 volts

Input Logic

The electrical load inputs are used by idle speed control strategy to prevent idle speed fluctuations when loads are demanded or turned off by the driver. Four circuits are used by the processor to detect the ON and OFF status of the blower motor and daytime running lights (Canadian vehicles), the headlights and the rear window defroster.

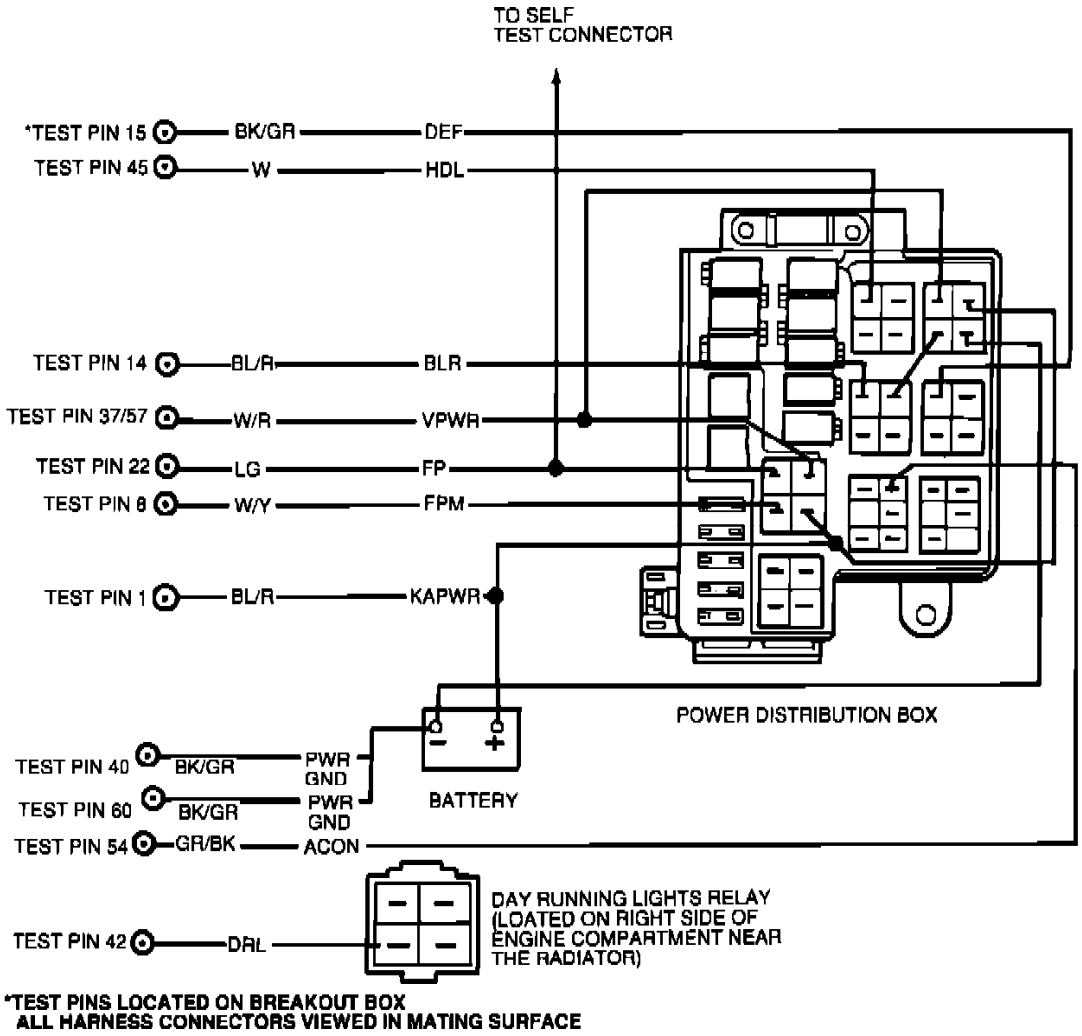

Schematic Diagram

TEST STEP	RESULT ▶	ACTION TO TAKE
FE1 ELECTRICAL LOAD SWITCH TEST DIRECTIONS		
• If the idle speed symptom is observed when the Blower Motor (BLR) is ON, then	▶	GO to FE10.
• If the idle speed symptom is observed when the Day Running Lights (DRL) are ON, then	▶	GO to FE20.
• If the idle speed symptom is observed when the Head Lamp (HDL) switch is turned ON, then	▶	GO to FE30.
• If the idle speed symptom is observed when the Rear Window Defrost (DEF) switch is turn ON, then	▶	GO to FE40.
• If the idle speed symptom is observed at any other time, then	▶	REFER to Diagnostic By Symptoms Section in Quick Test.

Pinpoint Test FE1

TEST STEP		RESULT ▶	ACTION TO TAKE
FE10	CHECK VOLTAGE OF BLR CIRCUIT, SWITHC IN LOW SPEED POSITION		
	• Key off. • Disconnect processor 60-pin connector. Inspect for damaged or pushed out pins, corrosion, loose wires, etc. Service as necessary. • Install breakout box, leave processor disconnected. • Key on, engine off. • Push the climate control blower motor switch to low speed position 1 or 2. • Turn all other accessories off. • Measure the voltage between Test Pin 14 at the breakout box and chassis ground. • **Is the voltage between 10 and 17 volts?**	Yes No	▶ GO to FE11. ▶ GO to FE13.

Pinpoint Test FE10

TEST STEP		RESULT ▶	ACTION TO TAKE
FE11	CHECK VOLTAGE OF BLR CIRCUIT, SWITCH IN HIGH SPEED POSITION		
	• Key off. • Breakout box installed, processor disconnected. • Push the climate control blower motor switch to high speed position 3 or 4. • Turn all other accessories off. • Key on, engine off. • Measure the voltage between Test Pin 14 at the Breakout box and chassis ground. • **Is voltage less than 1.5 volts?**	Yes No	▶ REPLACE the processor. REMOVE breakout box. VERIFY elimination of idle speed concern. ▶ GO to FE12.

Pinpoint Test FE11

TEST STEP		RESULT ▶	ACTION TO TAKE
FE12	CHECK BLR CIRCUIT FOR SHORT TO POWER		
	• Key off. • Disconnect blower motor relay (refer to schematic). • Breakout box installed, processor disconnected. • Measure resistance between Test Pin 14 and Test Pins 37/57 at the breakout box. • **Is resistance greater than 10,000 ohms?**	Yes No	▶ REMOVE breakout box. RECONNECT all components. REFER to HEATING VENTILATION AND AIR CONDITIONING to check for damaged blower motor switch or relay. ▶ SERVICE short circuit. REMOVE breakout box. RECONNECT all components. VERIFY elimination of idle speed concern

Pinpoint Test FE12

TEST STEP		RESULT ▶	ACTION TO TAKE
FE13	CHECK BLR CIRCUIT CONTINUITY		
	• Key off. • Disconnect blower motor relay. • Breakout box installed, processor disconnected. • Measure resistance between Test Pin 14 at breakout box and BLR circuit at Power Distribution box. • **Is resistance less than 5.0 ohms?**	Yes ▶ No ▶	GO to FE14. SERVICE open circuit. REMOVE breakout box. RECONNECT all components. VERIFY elimination of idle speed concern.

Pinpoint Test FE13

TEST STEP		RESULT ▶	ACTION TO TAKE
FE14	CHECK BLR CIRCUIT FOR SHORT TO GROUND		
	• Key off. • Blower motor relay disconnected. • Breakout box installed, processor disconnected. • Measure resistance between Test Pin 14 and Test Pins 40, 46 and 60 at breakout box. • **Is resistance greater than 10,000 ohms?**	Yes ▶ No ▶	REMOVE breakout box. RECONNECT all components. REFER to HEATING VENTILATION AND AIR CONDITIONING to check for damaged blower motor switch or relay. SERVICE short circuit. REMOVE breakout box. RECONNECT all components. VERIFY elimination of idle speed concern.

Pinpoint Test FE14

TEST STEP		RESULT ▶	ACTION TO TAKE
FE20	CHECK VOLTAGE OF DRL CIRCUIT, PARKING BRAKE AND HEADLAMPS ON		
	• Key off. • Disconnect processor 60-pin connector. Inspect for damaged or pushed out pins, corrosion, loose wires, etc. Service as necessary. • Install breakout box, leave processor disconnected. • Apply parking brake. • Key on, engine off. • Turn headlights on. • Turn all other accessories off. • Measure voltage between Test Pin 42 at breakout box and chassis ground. • **Is voltage between 10 and 17 volts?**	Yes ▶ No ▶	GO to FE21. GO to FE23.

Pinpoint Test FE20

TEST STEP	RESULT ▶	ACTION TO TAKE
FE21 CHECK VOLTAGE OF DRL CIRCUIT, PARKING BRAKE AND HEADLAMPS OFF		
• Key off. • Breakout box installed, processor disconnected. • Release parking brakes. • Key on, engine off. • Turn headlights off. • Measure voltage between Test Pin 42 at breakout box and chassis ground. • **Is voltage less than 1.5 volts?**	Yes ▶ No ▶	REPLACE processor. REMOVE breakout box. VERIFY elimination of idle speed concern. GO to FE22.

Pinpoint Test FE21

TEST STEP	RESULT ▶	ACTION TO TAKE
FE22 CHECK DRL CIRCUIT FOR SHORT TO POWER		
• Key off. • Breakout box installed, processor disconnected. • Disconnect Daytime Running Lights relay • Measure resistance between Test Pin 42 and Test Pins 37 / 57 at breakout box. • **Is resistance greater than 10,000 ohms?**	Yes ▶ No ▶	REMOVE breakout box. RECONNECT all components. REFER to BODY ELECTRICAL SAFTY AND ENTERTAINMENT SERVICE short circuit. REMOVE breakout box. RECONNECT all components. VERIFY elimination of idle speed concern.

Pinpoint Test FE22

TEST STEP	RESULT ▶	ACTION TO TAKE
FE23 CHECK DRL CIRCUIT CONTINUITY		
• Key off. • Breakout box installed, processor disconnected. • Disconnect Daytime Running Lights relay • Measure resistance between Test Pin 42 at breakout box and day running lights relay signal pin cavity at DRL relay female connector. • **Is resistance less than 5.0 ohms?**	Yes ▶ No ▶	GO to FE24. SERVICE open circuit. REMOVE breakout box. RECONNECT all components. VERIFY elimination of idle speed concern.

Pinpoint Test FE23

TEST STEP	RESULT ▶	ACTION TO TAKE
FE24 CHECK DRL CIRCUIT FOR SHORT TO GROUND		
• Key off. • Daytime Running Lights relay disconnected. • Breakout box installed, processor disconnected. • Measure resistance between Test Pin 42 and Test Pins 40, 46 and 60 at breakout box. • **Is resistance greater than 10,000 ohms?**	Yes ▶ No ▶	REMOVE breakout box. RECONNECT all components. REFER to BODY ELECTRICAL SAFETY AND ENTERTAINMENT to check for damaged DRL module. SERVICE short circuit. REMOVE breakout box. RECONNECT all components. VERIFY elimination of idle speed concern.

Pinpoint Test FE24

TEST STEP		RESULT ▶	ACTION TO TAKE
FE30	CHECK VOLTAGE OF HDL CIRCUIT, HEADLAMPS OFF		
	• Key off. • Disconnect processor 60-pin connector. Inspect for damaged or pushed out pins, corrosion, loose wires, etc. the Service as necessary. • Install breakout box, leave processor disconnected. • Key on, engine off. • Turn headlamps and all other accessories off. • Measure voltage between Test Pin 45 at Breakout box and chassis ground. • **Is voltage less than 1.5 volts?**	Yes ▶ No ▶	GO to FE31. GO to FE34.

Pinpoint Test FE30

TEST STEP		RESULT ▶	ACTION TO TAKE
FE31	CHECK VOLTAGE OF HDL CIRCUIT, HEADLAMPS ON		
	• Key off. • Breakout box installed, processor disconnected. • Key on, engine off. • All accessories off. • Turn headlamps on. • Measure voltage between Test Pin 45 at breakout box and chassis ground. • **Is voltage between 10 and 17 volts?**	Yes ▶ No ▶	REPLACE processor. REMOVE breakout box. VERIFY elimination of idle speed concern. GO to FE32.

Pinpoint Test FE31

TEST STEP		RESULT ▶	ACTION TO TAKE
FE32	CHECK HDL CIRCUIT CONTINUITY		
	• Key off. • Disconnect headlamp relay. • Breakout box installed, processor disconnected. • Measure resistance between Test Pin 45 at breakout box and HDL circuit at Power Distribution box . • **Is resistance less than 5.0 ohms?**	Yes ▶ No ▶	GO to FE33. SERVICE open circuit. REMOVE breakout box. RECONNECT all components. VERIFY elimination of idle speed concern.

Pinpoint Test FE32

TEST STEP		RESULT ▶	ACTION TO TAKE
FE33	CHECK HDL CIRCUIT FOR SHORT TO GROUND		
	• Key off. • Headlamp relay disconnected. • Breakout box installed, processor disconnected. • Measure resistance between Test Pin 45 and Test Pins 40, 46 and 60 at breakout box. • **Is each resistance greater than 10,000 ohms?**	Yes ▶ No ▶	REMOVE breakout box. RECONNECT all components. REFER to BODY ELECTRICAL SAFTY AND ENTERTAINMENT to check for damaged HDL switch. SERVICE short circuit. REMOVE breakout box. RECONNECT all components. VERIFY elimination of idle speed concern.

Pinpoint Test FE33

TEST STEP		RESULT ▶	ACTION TO TAKE
FE34	CHECK HDL CIRCUIT FOR SHORT TO POWER		
	• Key off. • Disconnect headlamp relay. • Breakout box installed, processor disconnected. • Measure resistance between Test Pin 45 and Test Pins 37 / 57 at breakout box. • **Is each resistance greater than 10,000 ohms?**	Yes ▶	REMOVE breakout box. RECONNECT all components. REFER to BODY ELECTRICAL SAFETY AND ENTERTAINMENT to check for damaged HDL switch.
		No ▶	SERVICE short circuit. REMOVE breakout box. RECONNECT all components. VERIFY elimination of idle speed concern.

Pinpoint Test FE34

TEST STEP		RESULT ▶	ACTION TO TAKE
FE40	CHECK VOLTAGE OF DEF CIRCUIT, DEFROST OFF		
	• Key off. • Disconnect processor 60-pin connector. Inspect for damaged or pushed out pins, corrosion, loose wires, etc. the Service as necessary. • Install breakout box, leave processor disconnected. • Key on, engine off. • Turn rear window defroster and all other accessories off. • Measure voltage between Test Pin 15 at breakout box and chassis ground. • **Is voltage between 10 and 17 volts?**	Yes ▶ No ▶	GO to FE41. GO to FE43.

Pinpoint Test FE40

TEST STEP		RESULT ▶	ACTION TO TAKE
FE41	CHECK VOLTAGE OF DEF CIRCUIT, DEFROST ON		
	• Key off. • Breakout box installed, processor disconnected. • Key on, engine off. • Turn all accessories off. • Turn rear window defroster on. • Measure voltage between Test Pin 15 at breakout box and chassis ground. • **Is voltage less than 3.0 volts?**	Yes ▶ No ▶	REPLACE processor. REMOVE breakout box. VERIFY elimination of idle speed concern. GO to FE42.

Pinpoint Test FE41

TEST STEP	RESULT ▶	ACTION TO TAKE
FE42 CHECK DEF CIRUCIT FOR SHORT TO POWER		
• Key off. • Disconnect rear window defroster relay. • Breakout box installed, processor disconnected. • Measure resistance between Test Pin 15 and Test Pins 37 / 57 at breakout box. • **Is each resistance greater than 10,000 ohms?**	Yes ▶ No ▶	REMOVE breakout box. RECONNECT all components. REFER to HEATING VENTILATION AND AIR CONDITIONING to check for fault in DEF switch and relay circuit. SERVICE short circuit. REMOVE breakout box. RECONNECT all components. VERIFY elimination of idle speed concern.

Pinpoint Test FE42

TEST STEP	RESULT ▶	ACTION TO TAKE
FE43 CHECK DEF CIRCUIT CONTINUITY		
• Key off. • Disconnect rear window defroster switch. • Breakout box installed, processor disconnected. • Measure resistance between Test Pin 15 at breakout box and DEF circuit at Power Distribution box. • **Is resistance less than 5.0 ohms?**	Yes ▶ No ▶	GO to FE44. SERVICE open circuit. REMOVE breakout box. RECONNECT all components. VERIFY elimination of idle speed concern.

Pinpoint Test FE43

TEST STEP	RESULT ▶	ACTION TO TAKE
FE44 CHECK DEF CIRCUIT FOR SHORT TO GROUND		
• Key off. • Rear window defroster relay disconnected. • Breakout box installed, processor disconnected. • Measure resistance between Test Pin 15 and Test Pin 40, 46 and 60 at breakout box. • **Is resistance greater than 10,000 ohms?**	Yes ▶ No ▶	REMOVE breakout box. RECONNECT all components. REFER to HEATING VENTILATION AND AIR CONDITIONING to check for fault in DEF swich and relay circuit. SERVICE short circuit. REMOVE breakout box. RECONNECT all components. VERIFY elimination of idle speed concern.

Pinpoint Test FE44

FF - Testing Notes

NOTE: You should enter this Pinpoint Test only when you have been directed here from Quick Test.

REMEMBER

To prevent the replacement of good components, be aware that the following non-EEC areas may be at fault.

- Idle speed/throttle stop adjustment

- Binding throttle shaft/linkage or speed control linkage

- Power steering hydraulic system

This Pinpoint Test is intended to diagnose only the following:

- Power steering pressure switch

- Harness circuits: PSPS, and SIG RTN

- Processor assembly

DESCRIPTION

The Power Steering Pressure Switch **(PSPS)** is a normally closed switch that opens as pressure increases. The processor uses the signal from the PSPS to adjust idle speed to compensate for the additional load on the engine.

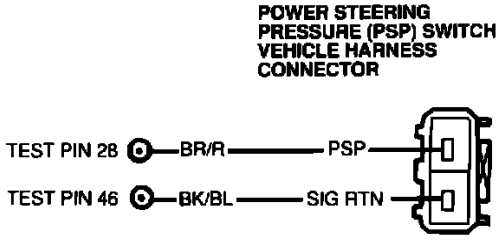

Schematic Diagram

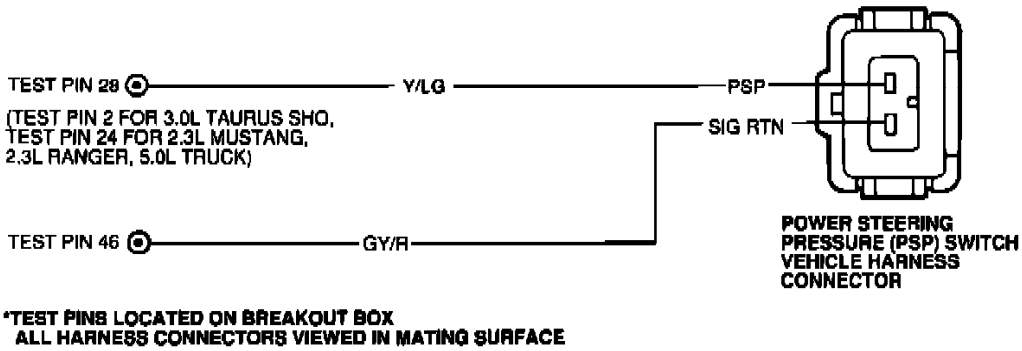

Schematic Diagram

	TEST STEP	RESULT ▶	ACTION TO TAKE
FF1	SERVICE CODE 52/519: ATTEMPT TO ELIMINATE CODE 52/519		
	NOTE: **Some vehicles are equipped with a PSPS software strategy, but do not have PSPS hardware released for the engine/vehicle application. When Service Code 52/519 is received in Key On Engine Off, check to see if the vehicle is equipped with PSPS. If not, disregard servicing the Code 52/519. Return to Quick Test Section to service other codes.** Service Code 52/519 indicates that the PSPS circuit is open. Possible causes: — Damaged PSPS switch. — Open harness. — Damaged processor. ● Key off. ● Disconnect PSPS. ● Jumper PSPS circuit to SIG RTN circuit at the PSPS vehicle harness connector. ● Rerun Key On or Engine Off Self-Test. ● **Is Code 52 or 519 still present?**	Yes ▶ No ▶	GO to FF2. REPLACE PSPS. RERUN Quick Test.

Pinpoint Test FF1

TEST STEP		RESULT ▶	ACTION TO TAKE
FF2	CHECK CONTINUITY OF PSP CIRCUITS		
	• Key off. • PSP switch disconnected. • Disconnect Powertrain Control Module (PCM). Inspect for damaged or pushed out pins, corrosion, loose wires, etc. Service as necessary. • Install breakout box, leave PCM disconnected. • Measure resistance between Test Pin 46 at the breakout box and SIG RTN circuit at the PSP switch vehicle harness connector. • Measure resistance between Test Pin 28 (Test Pin 2 for 3.0L SHO; Test Pin 24 for 2.3L Mustang, 2.3L Ranger, 5.0L Truck) at the breakout box and PSP circuit at the PSP switch vehicle harness connector. • **Is each resistance less than 5.0 ohms?**	Yes ▶ No ▶	REPLACE PCM. REMOVE breakout box. RECONNECT all components. RERUN Quick Test. SERVICE open circuit. REMOVE breakout box. RECONNECT all components. RERUN Quick Test.

Pinpoint Test FF2

FF3 - Check PSPS Operation

*** UPDATED BY TSB 926B1 DATED 02-01-92

TEST STEP		RESULT ▶	ACTION TO TAKE
FF3	CHECK PSPS OPERATION		
	• Key off. • Install tachometer. • Start engine, allow to idle in NEUTRAL/PARK. • Disconnect PSPS. • **Does rpm increase?**	Yes ▶ No ▶	REPLACE PSPS. RE-EVALUATE symptom. GO to FF4.

Pinpoint Test FF3

TEST STEP		RESULT ▶	ACTION TO TAKE
FF4	CHECK PSP CIRCUITS FOR SHORTS		
	• Key off. • PSP switch disconnected. • Disconnect Powertrain Control Module (PCM). Inspect for damaged or pushed out pins, corrosion, loose wires, etc. Service as necessary. • Install breakout box, leave PCM disconnected. • Measure resistance between Test Pin 28 (Test Pin 2 for 3.0L SHO; Test Pin 24 for 2.3L Mustang, 2.3L Ranger, 5.0L Truck) and Test Pin 46 at the breakout box. • **Is resistance less than 10,000 ohms?**	Yes ▶ No ▶	SERVICE short in harness. REMOVE breakout box. RECONNECT all components. RE-EVALUATE symptom. REPLACE PCM. REMOVE breakout box. RECONNECT all components. RE-EVALUATE symptom.

Pinpoint Test FF4

FF5 - Verify Operator Interaction Service Code 52/521

*** UPDATED BY TSB 926B1 DATED 02-01-92

TEST STEP		RESULT ▶	ACTION TO TAKE
FF5	VERIFY OPERATOR INTERACTION SERVICE CODE 52/521		
	NOTE: **Some vehicles are equipped with a PSPS software strategy, but do not have PSPS hardware released for the engine/vehicle application. When Service Code 52/521 is received in Key On Engine Running, check to see if the vehicle is equipped with PSPS. If not, disregard servicing the Code 52/521. Return to Quick Test Section to service other codes.** Engine Running Service Code 52/521 indicates that the PSPS did not change states due to the switch staying either open or closed. Possible causes: — Damaged PSPS switch. — Open or grounded harness circuit. — Damaged processor. — Wheel turned, not centered. • **Did you turn the steering wheel at least one-half turn within one to two seconds after engine ID code?**	Yes No	▶ GO to FF6. ▶ RERUN Quick Test.

Pinpoint Test FF5

FF6 - Determine If the Processor Can Identify an Open Circuit

*** UPDATED BY TSB 926B1 DATED 02-01-92

TEST STEP		RESULT ▶	ACTION TO TAKE
FF6	DETERMINE WHETHER THE PROCESSOR CAN IDENTIFY AN OPEN CIRCUIT		
	• Key off. • Disconnect PSPS. • Run Key On Engine Off Self-Test. • **Is Code 52 or 519 present?**	Yes No	▶ GO to FF8. ▶ GO to FF7.

Pinpoint Test FF6

TEST STEP		RESULT ▶	ACTION TO TAKE
FF7	CHECK PSP CIRCUITS FOR SHORTS		
	• Key off. • PSP switch disconnected. • Disconnect Powertrain Control Module (PCM). Inspect for damaged or pushed out pins, corrosion or loose wires, etc. Service as necessary. • Install breakout box, leave PCM disconnected. • Measure resistance between Test Pin 28 (Test Pin 2 for 3.0L SHO; Test Pin 24 for 2.3L Mustang, 2.3L Ranger, 5.0L Truck) and Test Pin 46 at the breakout box. • **Is resistance 10,000 ohms or less?**	Yes No	▶ SERVICE short circuit. REMOVE breakout box. RECONNECT all components. RERUN Quick Test. ▶ REPLACE PCM. REMOVE breakout box. RECONNECT all components. RERUN Quick Test.

Pinpoint Test FF7

TEST STEP		RESULT ▶	ACTION TO TAKE
FF8	CHECK PSP SWITCH STATE WITH KEY ON ENGINE OFF VS. ENGINE RUNNING		
	• Key off. • Disconnect Powertrain Control Module (PCM). Inspect for damaged or pushed out pins, corrosion, loose wires, etc. Service as necessary. • Install breakout box and connect PCM to breakout box. • Reconnect PSP switch. • Key on, engine off. • Measure resistance between Test Pin 28 (Test Pin 2 for 3.0L SHO; Test Pin 24 for 2.3L Mustang, 2.3L Ranger, 5.0L Truck) and Test Pin 46 at the breakout box. • Start engine. • **Does resistance remain less than 10 ohms between Key On Engine Off and Engine Running?**	Yes ▶ No ▶	GO to FF9. REPLACE PSP switch. REMOVE breakout box. RERUN Quick Test.

Pinpoint Test FF8

TEST STEP		RESULT ▶	ACTION TO TAKE
FF9	CHECK PSP SWITCH STATE WITH ENGINE RUNNING AND LOAD VS. NO LOAD		
	• Engine idling. • Breakout box installed, PCM connected. • PSP switch connected. • Clutch is not depressed on 3.0L SHO manual vehicles. • Measure the resistance between Test Pin 28 (Test Pin 2 for 3.0L SHO; Test Pin 24 for 2.3L Mustang, 2.3L Ranger, 5.0L Truck) and Test Pin 46 at the breakout box. • Turn the steering wheel at least one-half turn then return. • **Does resistance change from less than 10 ohms to infinity (indicating PSP switch opening), then returning to 10 ohms or less when steering wheel is returned to center position?**	Yes ▶ No ▶	PSP system OK. Testing completed. REMOVE breakout box. REPLACE PSP switch. REMOVE breakout box. RERUN Quick Test.

Pinpoint Test FF9

FF10 - Service Code 519: Attempt to Eliminate Code 519

*** UPDATED BY TSB 926B1 DATED 02-01-92

TEST STEP		RESULT ▶	ACTION TO TAKE
FF10	SERVICE CODE 519: ATTEMPT TO ELIMINATE CODE 519		
	NOTE: Some vehicles are equipped with PSPS software strategy, but do not have the hardware released for production. When Service Code 519 is present check to see if the vehicle has a PSPS. If not, disregard servicing code 519. Return to Quick Test to service other codes. Service Code 519 indicates that the PSPS circuit is closed. Possible causes: — Damaged PSPS switch. — Open or shorted harness. — Damaged processor. • Key off. • Disconnect PSPS. • Rerun Key On Engine Off Self-Test. • Measure resistance between Test Pin 28 and Test Pin 46 at the breakout box. • **Is Code 519 still present?**	Yes ▶ No ▶	GO to FF11. REPLACE PSPS. RERUN Quick Test

Pinpoint Test FF10

FF11 - Check PSPS Circuit For Short

*** UPDATED BY TSB 926B1 DATED 02-01-92

TEST STEP		RESULT ▶	ACTION TO TAKE
FF11	CHECK PSPS CIRCUITS FOR SHORT		
	• Key off. • PSPS disconnected. • Disconnect processor 60-pin connector. Inspect for damaged or pushed out pins, corrosion, loose wires, ets. Service as necessary.	Yes ▶	SERVICE short in harness. REMOVE breakout box. RECONNECT all components. RE-EVALUATE symptom.
	• Install breakout box, leave processor disconnected • Measure resistance between Test Pin 28 and Test Pin 46 at the breakout box. • **Is resistance less than 10K ohms?**	No ▶	REPLACE processor. REMOVE breakout box. RECONNECT all components. RE-EVALUATE symptom.

Pinpoint Test FF11

FF15 - Check PSPS Operation

*** UPDATED BY TSB 926B1 DATED 02-01-92

TEST STEP		RESULT ▶	ACTION TO TAKE
FF15	CHECK PSPS OPERATION		
	• Key off. • Install tachometer. • Start engine and idle in PARK/NEUTRAL. Disconnect PSPS.	Yes ▶	REPLACE PSPS. REMOVE jumper. RE-EVALUATE symptom.
	• Jumper PSPS circuit to SIG RTN circuit at the PSPS vehicle harness connector. • **Does rpm increase?**	No ▶	REMOVE jumper. GO to FF16.

Pinpoint Test FF15

FF16 - Check Continuity of PSPS Circuits

*** UPDATED BY TSB 926B1 DATED 02-01-92

TEST STEP		RESULT	ACTION TO TAKE
FF16	CHECK CONTINUITY OF PSPS CIRCUITS		
	• Key off. • PSPS disconnected. • Disconnect processor 60-pin connector. Inspect for damaged or pushed out pins, corrosion, loose wires, etc. Service as necessary. • Install breakout box, leave processor connected. • Measure resistance between Test Pin 28 at the breakout box and PSPS circuit at the vehicle harness connector. • Measure resistance between Test Pin 46 at the breakout box and SIG RTN circuit at the PSPS vehicle harness connected. • **Is each resistance less than 5.0 ohms?**	Yes No	REPLACE processor. REMOVE breakout box. RECONNECT all components. RE-EVALUATE symptom. SERVICE open in harness. REMOVE breakout box. RECONNECT all components. RERUN Quick Test.

Pinpoint Test FF16

TEST STEP		RESULT	ACTION TO TAKE
FF20	SERVICE CODE 521: VERIFY OPERATOR INTERACTION		
	NOTE: **Some vehicles are equipped with PSPS software strategy, but do not have the hardware released for production. When Service Code 519 is present check to see if the vehicle has a PSPS; If not, disregard servicing Code 519. Return to Quick Test to service other codes.** Service Code 521 indicates that the PSPS did not change state due to the switch staying either open or closed. Possible Causes: — Damaged PSPS switch. — Open or shorted harness. — Damaged processor. — Wheels turned, not centered. • **Did you turn the steering wheel at least one-half turn within one to two seconds after engine ID code?**	Yes No	GO to FF21. RERUN Quick Test.

Pinpoint Test FF20

TEST STEP		RESULT	ACTION TO TAKE
FF21	DETERMINE IF THE PROCESSOR CAN IDENTIFY A CLOSED CIRCUIT		
	• Key off. • Disconnect PSPS. • Jumper PSPS circuit to SIG RTN circuit at the PSPS vehicle harness connector. • Run Key On Engine Off Self Test. • **Is Code 519 present?**	Yes No	REMOVE jumper. GO to FF23. REMOVE jumper. GO to FF22.

Pinpoint Test FF21

TEST STEP		RESULT ▶	ACTION TO TAKE
FF22	CHECK CONTINUITY OF PSPS CIRCUITS • Key off. • PSPS disconnected. • Disconnect processor 60-pin connector. Inspect for damaged or pushed out pins, corrosion, loose wires, etc. Service as necessary. • Install breakout box, leave processor disconnected. • Measure resistance between Test Pin 28 at the breakout box and PSPS circuit at the vehicle harness connector. • Measure resistance between Test Pin 46 at the breakout box and SIG RTN circuit at the PSPS vehicle harness connector. • **Is each resistance less than 5.0 ohms?**	Yes No	▶ REPLACE processor. REMOVE breakout box. RECONNECT all components. RE-EVALUATE sympton. ▶ SERVICE open in harness. REMOVE breakout box. RECONNECT all components. RERUN Quick Test.

Pinpoint Test FF23

TEST STEP		RESULT ▶	ACTION TO TAKE
FF23	CHECK PSPS STATE WITH KEY ON ENGINE OFF VS. ENGINE RUNNING • Key off. • Disconnect processor 60-pin connector. Inspect for damaged or pushed out pins, corrosion, loose wires, etc. Service as necessary. • Install breakout box and connect processor to breakout box. • Reconnect PSPS. • Key on, engine off. • Measure resistance between Test Pin 28 and Test Pin 46 at the breakout box. • Start Engine. • **Does resistance remain greater than 10 ohms between Key On, Engine Off and Engine Running?**	Yes No	▶ GO to FF24. ▶ REPLACE PSPS. REMOVE breakout box. RERUN Quick Test.

Pinpoint Test FF23

TEST STEP		RESULT ▶	ACTION TO TAKE
FF24	CHECK PSPS STATE WITH ENGINE RUNNING AND LOAD VS. NO LOAD • Engine speed at idle. • Breakout box installed, processor connected. • PSPS connected. • Measure resistance between Test Pin 28 and Test Pin 46 at the breakout box. • Turn the steering wheel at least one-half turn then back to center position. • **Does resistance change from infinity to less than 30 ohms indicating PSPS closing then changing back to infinity?**	Yes No	▶ PSPS system OK. REMOVE breakout box. Testing completed. ▶ REPLACE PSPS. REMOVE breakout box. RERUN Quick Test.

Pinpoint Test FF24

G - Testing Notes

NOTE: You should enter this Pinpoint Test only when you have been directed here from Quick Test.

REMEMBER

To prevent the replacement of good components, be aware that the following non-EEC areas may be at fault.

- Excessive blow-by

- PCV malfunction

- Vacuum leaks

- Fuel pressure

- Throttle sticking or linkage binding

This Pinpoint Test is intended to diagnose only the following:

- MAP/BARO sensor

- Throttle Position **(TP)** sensor

- Mass Air Flow **(MAF)** sensor

- Air Charge Temperature **(ACT)** sensor

- Fuel Injectors

DESCRIPTION

This In-Range Self-Test was designed to detect in-range failures of the MAF sensor, TP sensor or the fuel delivery system. The EEC processor will use information from these areas based on vehicle load to generate three independent values. The three independent values will be continuously monitored by the EEC processor and if one of the values differ significantly from others during normal vehicle operation, Continuous Memory codes will be displayed.

TEST STEP		RESULT ▶	ACTION TO TAKE
G1	THROTTLE POSITION SENSOR INTEGRITY		
	Continuous Memory Diagnostic Trouble Code (DTC) 121 indicates TP was inconsistent with MAF value. Continuous Memory DTC 124 indicates TP value was higher than expected. Continuous Memory DTC 125 indicates TP value was lower than expected. ● Key off. ● Disconnect Powertrain Control Module (PCM). Inspect for damaged or pushed out pins, corrosion, loose wires, etc. Service as necessary. ● Install breakout box and connect PCM to breakout box. ● Connect DVOM from Test Pin 47 to Test Pin 46 at the breakout box. ● Key on, engine off. ● Rotate throttle slowly to WOT, release throttle slowly to closed position. ● **Does the voltage change smoothly between 0.4 and 4.5 volts?** NOTE: **Refer to Pinpoint Test DH for schematics and specific engine values.**	Yes ▶ No ▶	**For Continuous Memory DTC 121:** GO to G7. **For all others:** GO to G2. VERIFY TP sensor is properly installed to the throttle body. If OK, REPLACE TP sensor. REMOVE breakout box. RECONNECT PCM. RERUN Quick Test.

Pinpoint Test G1

TEST STEP		RESULT ▶	ACTION TO TAKE
G2	CHECK IDLE		
	● Verify engine idle speed is normal. ● Refer to fuel delivery and air induction ● **Is idle normal?**	Yes ▶ No ▶	GO to G3. RESET idle airflow to specification. REFER to fuel delivery and air induction for idle airflow adjust procedure. If unable to adjust, GO to G3.

Pinpoint Test G2

TEST STEP		RESULT ▶	ACTION TO TAKE
G3	CHECK THROTTLE BODY		
	• Check throttle linkage and / or speed control linkage for binding. • Inspect throttle body for contamination. Refer to fuel delivery and air induction to determine if Idle Air Control (IAC) solenoid can be cleaned. • Check engine vacuum hoses. Refer to VECI decal. • Check for leaks around IAC solenoid mounting gasket. • Check for air leaks between IAC solenoid and MAF sensor. • **Are all of the above checks OK?**	Yes ▶ No ▶	GO to G4. SERVICE as necessary. REMOVE breakout box. RECONNECT PCM. RERUN Quick Test.

Pinpoint Test G3

TEST STEP		RESULT ▶	ACTION TO TAKE
G4	CHECK MAP / BARO SENSOR OUTPUT		
	NOTE: **For vehicles without a MAP / BARO sensor, go to G5. Measure several known good MAP / BARO sensors on available vehicles. The measured voltage will be typical for your location on the day of testing. Refer to Pinpoint Test DF for schematic.** • Key off • Disconnect MAP / BARO sensor from vehicle harness. • Connect MAP / BARO tester between the vehicle harness connector and MAP / BARO sensor. • Insert MAP / BARO tester banana plugs into DVOM. • DVOM on 20 volt scale. • Key on, engine off. • Measure MAP / BARO sensor voltage on vehicle. • **Is DVOM voltage in range for your altitude?**	Yes ▶ No ▶	REMOVE MAP / BARO tester. RECONNECT MAP / BARO sensor. GO to G5. REPLACE MAP / BARO sensor. REMOVE MAP / BARO tester and breakout box. RECONNECT all components. RERUN Quick Test.

Approximate Altitude (Ft.)	Voltage Output (+/-.04 Volt)
0	1.59
1000	1.56
2000	1.53
3000	1.50
4000	1.47
5000	1.44
6000	1.41
7000	1.39

Pinpoint Test G4

TEST STEP		RESULT ▶	ACTION TO TAKE
G5	CHECK INTAKE AIR TEMPERATURE (IAT) SENSOR		
	NOTE: **Ambient temperature should be at least 10°C (50°F) before performing this test. Also check for air leaks in front of the IAT sensor. Service as necessary.** • Key off. • Breakout box installed, PCM connected. • Connect DVOM between Test Pin 25 and Test Pin 46 at breakout box. • DVOM on 20 volt scale. • Monitor voltage as engine warms up. • **Does voltage decrease smoothly and stabilize after engine has reached operating conditions?** NOTE: **Refer to voltage chart in Pinpoint Test DA for engine specific values.**	Yes ▶ No ▶	Sometime during the last 80 warm-up cycles the TP sensor signal indicated out of range. However, at this time EEC system is operating OK. REMOVE breakout box. RECONNECT PCM. RERUN Quick Test. REPLACE IAT sensor. REMOVE breakout box. RERUN Quick Test.

Pinpoint Test G5

TEST STEP		RESULT ▶	ACTION TO TAKE
G6	VISUALLY INSPECT MAF SENSOR		
	Continuous Memory DTC 184 indicates MAF value is higher than expected. Continuous Memory DTC 185 indicates MAF value is lower than expected. • Key off. • Check for air leaks between IAC solenoid and MAF sensor. • Inspect MAF sensor for oil contamination. — Excessive blow-by — PCV malfunction. • **Are the above checks OK?**	Yes ▶ No ▶	GO to G9. SERVICE as necessary. CLEAR Continuous Memory RERUN Quick Test.

Pinpoint Test G6

TEST STEP		RESULT ▶	ACTION TO TAKE
G7	CHECK MAF SENSOR		
	• Key off. • Disconnect Powertrain Control Module (PCM). Inspect for damaged or pushed out pins, corrosion, loose wires, etc. Service as necessary. • Install breakout box, and connect PCM to breakout box. • Start engine and allow to idle until engine is at normal operating temperature. • Measure voltage between MAF signal and Test Pin 40/60. NOTE: **Refer to specifications for engine specific voltages.** • **Is voltage within the acceptable range?**	Yes ▶ No ▶	Sometime during the last 80 warm-up cycles the MAF sensor signal indicated out of range. However, at this time EEC system is operating OK. REMOVE breakout box. RECONNECT PCM. RERUN Quick Test. REPLACE MAF sensor. REMOVE breakout box. RECONNECT PCM. RERUN Quick Test.

Pinpoint Test G7

TEST STEP		RESULT ▶	ACTION TO TAKE
G8	VISUAL VACUUM CHECKS		
	Continuous Memory DTC 186 indicates pulse width lower than expected (rich). Continuous Memory DTC 187 indicates pulse width higher than expected (lean). • Inspect the air cleaner and air inlet ducting. • Check for unmetered air between MAF sensor and IAC solenoid. • Check all engine vacuum hoses for damage, leaks, cracks, blockage, proper routing, etc. • **Are all the above vacuum checks OK?**	Yes ▶ No ▶	GO to G9. SERVICE as necessary. RERUN Quick Test.

Pinpoint Test G8

TEST STEP		RESULT ▶	ACTION TO TAKE
G9	CHECK FUEL PRESSURE		
	• Key off. • Install fuel pressure gauge. • Verify manifold vacuum is connected to the fuel pressure regulator if applicable. • Start and run engine at idle. • Refer to fuel specification table in Pinpoint Test H. • **Is fuel pressure within specification for the engine being tested?**	Yes ▶ No ▶	GO to G10. GO to fuel delivery and air induction for Electric Fuel pump and fuel pressure regulator checks.

Pinpoint Test G9

TEST STEP		RESULT ▶	ACTION TO TAKE
G10	CHECK SYSTEM'S ABILITY TO HOLD FUEL PRESSURE		
	• Key on, engine off. • **Does fuel pressure remain at specification for 60 seconds?**	Yes ▶ No ▶	**For Flexible Fuel vehicles:** GO to HB2. **FOR MFI:** GO to Pinpoint Test Step H7. **FOR SFI:** GO to G11. GO to fuel delivery and air induction.

Pinpoint Test G10

TEST STEP		RESULT ▶	ACTION TO TAKE
G11	CYLINDER BALANCE TEST		
	• Run the Engine Running Self-Test. • After the last repeated DTC, wait 5-10 seconds. • "Goose" throttle lighty (not wide-open-throttle). • Cylinder Balance Diagnostic Test Mode (DTM) will be performed. Time of test is approximately 2-3 minutes. • **Is Code 90 present?**	Yes ▶ No ▶	GO to G6. **For Flexible Fuel vehicles:** GO to HB5. **All others:** GO to Pinpoint Test Step H4.

Pinpoint Test G11

All Engines
Values Are In Ohms

2.3L	3.0L 4.0L/4.9L	5.0L/5.8L 7.0L/7.5L
6.0 - 8.5	4.0 - 5.5	3.0 - 4.0

Injector Bank Resistance Table 1

All Engines
Values Are In Ohms

ALL ENGINES
11.0 - 18.0

Single Injector Resistance Specification Table 2

ENGINE MODE	ENGINE APPLICATION			All Other Applications
	2.3L HSC EFI SEFI	3.0L SHO SEFI	3.8L SC SEFI	
ENGINE RUNNING	45-60 PSI 310-415 kPa	28-33 PSI 193-227 kPa	30-40 PSI 210-280 kPa	30-45 PSI 210-310 kPa
KEY ON ENGINE OFF	50-60 PSI 345-415 kPa	30-45 PSI 210-310 kPa	35-40 PSI 240-280 kPa	35-40 PSI 240-280 kPa

Schematic Diagrams

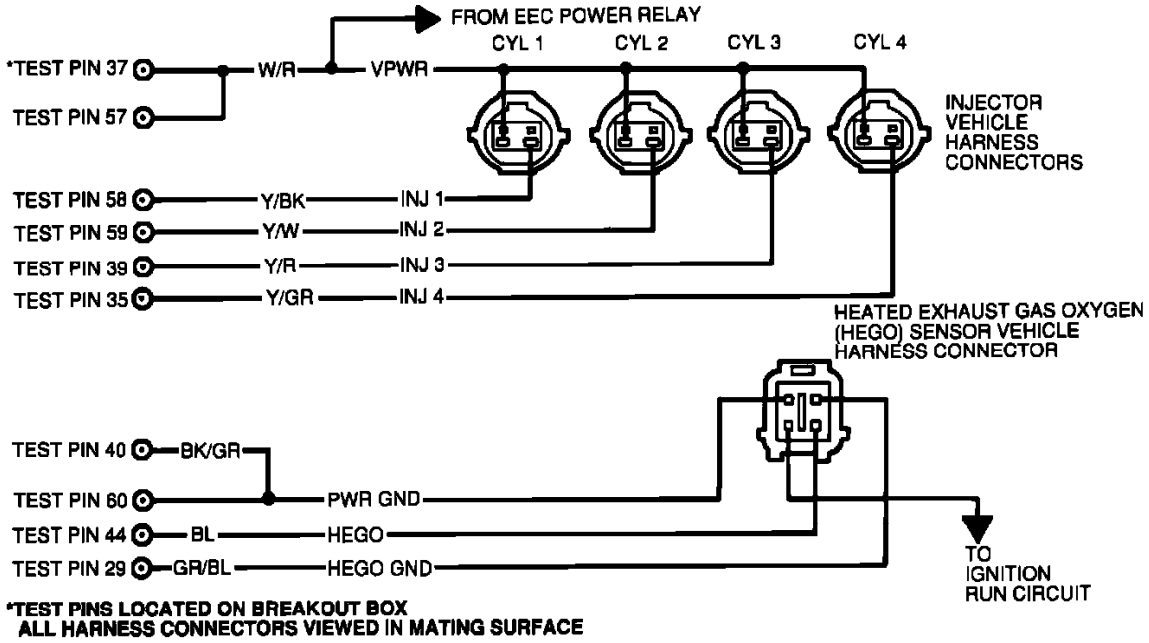

Schematic Diagrams

H - Testing Notes

NOTE: You should enter this Pinpoint Test only when you have been directed here from Quick Test or Pinpoint Test S.

REMEMBER

To prevent the replacement of good components, be aware that the following non-EEC areas may be at fault.

- Ignition System
- Evaporative Emissions System
- Positive Crankcase Ventilation System
- Thermactor System
- Exhaust Gas Recirculation System
- Air Intake System/Filter
- Fuel Engine Oil contamination
- Electrical System
- Fuel System

- Intake, Manifold, Supercharger, Intercooler Leaks
- Exhaust Manifold System Leak/Plugged
- Engine Cooling System

This Pinpoint Test is intended to diagnose only the following:

- HEGO Sensor/heater
- HEGO Signal and Ground Circuit
- HEGO Sensor Connection
- Vacuum System
- Fuel Injector
- Fuel Injector electrical circuits
- Processor Assembly
- Harness circuits: HEGO GND, HEGO, INJ. 1-8, VPWR, SIG RTN

DESCRIPTION

The Heated Exhaust Gas Oxygen **(HEGO)** sensor reacts with the oxygen in the exhaust gases and generates a voltage based on this reaction. A low voltage indicates too much oxygen or a lean condition. A high voltage indicates not enough oxygen or a rich condition. The fuel injection is a typical on/off device. The amount of fuel delivered is determined by how long the injector is held open.

TEST STEP		RESULT ▶	ACTION TO TAKE
H1	CHECK FOR FUEL DILUTED ENGINE OIL		
		Yes ▶	REINSTALL PCV valve. GO to H2.
		No ▶	For Continuous Memory DTC's 41/144, 91/139, 176 GO to H2 All Others: CHANGE engine oil and filter. REINSTALL PCV valve. DRIVE vehicle 5 miles/55mph. RERUN Quick Test.

Diagnostic Trouble Code (DTC)	HO2S Orientation	Fault Definition
41/172r 91/136r 176c	right or rear left or front left or front	system indicates lean
42/173r 92/137r 177c	right or rear left or front left or front	system indicates rich
144/41c 139/91c	right or rear left or front	no HO2S switch detected
171c 175c	right or rear left or front	adaptive fuel limit reached

Possible Causes:

- Fuel injectors.
- HO2S.
- Secondary Air Injection (AIR) system.
- PCV/Hose.
- Vacuum.
- CANP.
- MAP sensor.
- Electronic Ignition Coil Failure.

- Key off.
- Remove the PCV valve from the valve cover. Inspect both rocker cover hole and PCV for damage, sludge build up, blockage and movement of valve plunger. Service as necessary.
- Run KOEO Quick Test.
- **Address any continuous ignition DTC's before servicing KOER DTCs.**
- Start engine and let idle for two minutes minimum.

NOTE: **For a No Start GO directly to H2.**

- Run KOER Quick Test.
- **Are any of the above DTC's present in KOER Quick Test?**

Pinpoint Test H1

TEST STEP		RESULT ▶	ACTION TO TAKE
H2	CHECK FUEL PRESSURE		
	WARNING: THE FUEL SYSTEM WILL REMAIN PRESSURIZED WHEN ENGINE IS NOT RUNNING. TO PREVENT INJURY OR FIRE USE CAUTION WHEN WORKING ON THE FUEL SYSTEM.	Yes ▶	GO to H3.
		No ▶	REFER to FUEL SYSTEM.

- Key off.
- Install fuel pressure gauge.
- Verify that manifold vacuum is connected to the fuel pressure regulator if applicable.

If engine will start:

- Start and run engine at idle. Note fuel pressure.
- Refer to Fuel Pressure Specification Table.

If engine will not start:

- Cycle the key off and on several times. Note fuel pressure.
- Refer to Fuel Pressure Specification Table.
- **Is fuel pressure within specification for the engine being tested?**

Pinpoint Test H2

TEST STEP		RESULT	ACTION TO TAKE
H3	CHECK SYSTEM'S ABILITY TO HOLD FUEL PRESSURE		
	• Pressurize fuel system per step H2. • Visually look for fuel leaking at the injector O-ring, fuel pressure regulator, and the fuel lines to the fuel charging assembly. Service as necessary. • Key on, engine off. • With a stethoscope listen for leaking fuel injectors. • **Does fuel pressure remain at specification for 60 seconds?**	Yes	**For No Starts:** GO to H4. **For Service Codes or other Symptoms:** **EFI:** GO to H5. **SEFI:** GO to H6.
		No	REFER to FUEL SYSTEM.

Pinpoint Test H3

TEST STEP		RESULT	ACTION TO TAKE
H4	FUEL DELIVERY TEST		
	• Key off. • Fuel pressure gauge installed. • Pressurize fuel system per step H2. • Locate and disconnect the inertia switch. • Crank engine for five seconds. • **Does pressure drop greater than 5 psi. (34 kPa) by the end of the five second crank cycle?**	Yes	The EEC-IV system is not the cause of the No Start. REMOVE the fuel pressure gauge. RECONNECT the inertia switch. REFER to DIAGNOSTIC ROUTINES.
		No	REMOVE fuel pressure gauge. RECONNECT inertia switch. **For EFI:** GO to H7. **For SEFI:** GO to H8.

Pinpoint Test H4

TEST STEP		RESULT	ACTION TO TAKE
H5	CYLINDER BALANCE TEST: EFI ENGINES		
	• Connect tachometer to engine. Run engine at idle. • Disconnect and reconnect the injectors one at a time: Note rpm drop for each injector. • **Does each injector produce a momentary drop in rpm?** NOTE: **ISC will attempt to re-establish rpm.**	Yes	**For Symptoms or Codes 41/172, 91/136, 176:** GO to H13. **For Codes 42/173, 92/137, 177:** GO to H24. **For all others:** GO to H14.
		No	GO to H7.

Pinpoint Test H5

TEST STEP		RESULT ▶	ACTION TO TAKE
H6	CYLINDER BALANCE TEST SEFI ENGINES		
	The Cylinder Balance Test switches each injector OFF and ON one at a time. Service codes correspond to the cylinder number, (i.e. Service Code 30 indicates a problem with cylinder No. 3, a Service Code 90 indicates a pass.) The Cylinder Balance Test is designed to aid in the detection of a weak or non-contributing cylinder. The Pinpoint Test Steps are designed to isolate only EEC-IV related problems. • Run the Engine Running Self-Test. • After the last repeated code, wait 5-10 seconds. • "Goose" throttle lightly (not wide-open-throttle). • Cylinder Balance Test will be performed. Time of test is approximately 2-3 minutes. • **Is a Cylinder Balance Fault Code present?**	Yes ▶ No ▶	GO to H8. **For Symptoms or Service Code 41/172, 91/136, 176:** GO to H13. **For Service Code 42/173, 92/137, 177:** GO to H24. **For all others:** GO to H14.

CYLINDER BALANCE TABLE
SERVICE CODE VS. CYLINDER

SERVICE CODE	90	10	20	30	40	50	60	70	80	77/538
CYLINDER/INJECTOR NUMBER	PASS	1	2	3	4	5	6	7	8	RERUN TEST*

* If throttle is touched (moved) during Cylinder Balance Test, Service Code 77/538 will appear, indicating test was not completed. Service Code 538 could also be output if a Continuous Memory Code 214(CID) is present. If Continuous Memory Code 214 is present refer to the appropriate code chart in Quick Test for service direction.

Pinpoint Test H6

TEST STEP		RESULT ▶	ACTION TO TAKE
H7	CHECK RESISTANCE OF INJECTOR(S) AND HARNESS EFI ENGINES.		
	• Key off. • Disconnect processor 60 pin connector. Inspect for damaged or pushed out pins, corrosion, loose wires, etc. Service as necessary. NOTE: **This erases Continuous Memory.** • Install breakout box, leave processor disconnected. • Measure resistance of INJECTOR BANK 1 between Test Pin 37 and Test Pin 58 at the breakout box. Record resistance. • Measure resistance of INJECTOR BANK 2 between Test Pin 37 and Test Pin 59 at the breakout box. Record resistance. • Refer to Injector Resistance Specification • **Is each resistance within specification for the appropriate engine?**	Yes ▶ No ▶	GO to H12. **For NO START:** SERVICE open in VPWR circuit. **For others:** GO to H9.

Pinpoint Test H7

TEST STEP		RESULT ▶	ACTION TO TAKE
H8	CHECK RESISTANCE OF INJECTOR(S) AND HARNESS SEFI ENGINES		
	• Key off. • Disconnect processor 60 pin connector. Inspect for damaged or pushed out pins, corrosion, loose wires, etc. Service as necessary. NOTE: **This erases Continuous Memory.** • Install breakout box, leave processor disconnected. • Measure resistance between the suspect INJECTOR circuit Test Pin and Test Pin 37 at the breakout box. Record resistance. • **For No Starts:** — Pick any injector and measure resistance between that INJECTOR circuit's Test Pin and Test Pin 37 at the breakout box. Record resistance. — Refer to Injector Resistance Specification • **Is each resistance within specification for the appropriate engine?**	Yes ▶ No ▶	GO to H12. **For NO START:** SERVICE open in VPWR circuit. **For others:** GO to H9.

Pinpoint Test H8

TEST STEP		RESULT ▶	ACTION TO TAKE
H9	CHECK CONTINUITY OF FUEL INJECTOR HARNESS		
	• Key off. • Breakout box installed, processor disconnected. • Disconnect injector vehicle harness connector at the suspect injector. • Measure resistance between Test Pin 37/57 at the breakout box and the VPWR pin at the injector vehicle harness connector. • Refer to the Pinpoint Test Schematic for the appropriate injector pin identification. • Measure resistance between the injector test pin(s) at the breakout box and the same injector circuit signal pin at the each injector vehicle harness connector. • **Is each resistance less than 5.0 ohms?**	Yes ▶ No ▶	GO to H10. SERVICE open circuit. REMOVE breakout box. RECONNECT processor and injectors. DRIVE vehicle 5 miles/55 mph. RERUN Quick Test.

Pinpoint Test H9

TEST STEP		RESULT ▶	ACTION TO TAKE
H10	CHECK INJECTOR HARNESS CIRCUIT FOR SHORT TO POWER OR GROUND		
	• Key off. • Breakout box installed, processor disconnected. • Suspect fuel injector vehicle harness disconnected. • Refer to the Pinpoint Test Schematic for the appropriate injector pin identification. • Measure resistance between the injector test pin(s) and Test Pin 37/57, 40, 46 and 60 at the breakout box. • Measure resistance between the injector test pin(s) at the breakout box and chassis ground. • **Is each resistance greater than 10,000 ohms?**	Yes ▶ No ▶	**For SEFI:** REPLACE injector per cylinder balance test fault code. RERUN Quick Test. **For EFI:** GO to H11. SERVICE short circuit. REMOVE breakout box. RECONNECT processor and injectors. DRIVE vehicle 5 miles/55 mph. RERUN Quick Test.

Pinpoint Test H10

TEST STEP		RESULT ▶	ACTION TO TAKE
H11	ISOLATE FAULTY INJECTOR CIRCUIT		
	• Key off. • Breakout box installed, PCM disconnected. • Disconnect all injectors on suspect bank. • DVOM on 200 ohm scale. • Connect one injector and measure resistance between Test Pin 37 and either Test Pin 58 or 59 as appropriate. • Disconnect that injector and repeat process for each of the remaining injectors. • Refer to Injector Resistance Specification Table 2. • **Is each resistance within specification for the appropriate engine?**	Yes ▶ No ▶	GO to H12. REPLACE injector. REMOVE breakout box. RECONNECT PCM and injectors. DRIVE vehicle 5 miles/55 mph. RERUN Quick Test.

Pinpoint Test H11

TEST STEP		RESULT ▶	ACTION TO TAKE
H12	CHECK INJECTOR DRIVER SIGNAL		
	Requires standard non-powered 12 volt test lamp. • Key off. • Breakout box installed. • Connect processor to breakout box. • **For EFI:** — Connect test lamp between Test Pin 37 and Test Pin 58 at the breakout box. — Connect test lamp between Test Pin 37 and 59 at the breakout box. • **For SEFI:** — Connect test lamp between Test Pin 37 and the suspect injectors Test Pin at the breakout box. • Crank or start engine. NOTE: **Properly operating systems will show a dim glow on the lamp.** • **Is glow on lamp dim?**	NoYes ▶ No ▶	REMOVE breakout box. RECONNECT processor. Follow instructions of the injector test equipment. Also refer to Ignition Section for other possible causes. After any servicing, DRIVE vehicle 5 miles/55 mph. RERUN Quick Test and Cylinder Balance Test. **No light/Bright light:** REPLACE processor. REMOVE breakout box. DRIVE vehicle 5 miles/55 mph. RERUN Quick Test.

Pinpoint Test H12

TEST STEP		RESULT ▶	ACTION TO TAKE
H13	CHECK SECONDARY AIR INJECTION (AIR) OPERATION		
	NOTE: **If vehicle is equipped with Pulsed-Secondary Air Injection (PAIR) or no AIR, ignore this step and GO to H14.** With dual HO2S, DTC 41/172 refers to right or rear HO2S; DTC 91/136, 176 refers to left or front HO2S. HO2S always lean could be caused by: — Thermactor air being diverted upstream from the HO2S. • Key off. • Disconnect the AIR hose(s) from the AIR pump so that secondary air is bypassed to atmosphere during testing. • Run Engine Running Quick Test. • **Are Codes 41/172, 91/136, 176 present?**	Yes ▶ No ▶	RECONNECT AIR Hose. GO to H14. For Continuous Memory DTC's 41/144, 91/139, 176 GO to H90. All Others: GO to emission control system for AIR systems diagnosis.

Pinpoint Test H13

H14 - Check HEGO Integrity

*** UPDATED BY TSB 9224B3 DATED 05-01-92

TEST STEP		RESULT ▶	ACTION TO TAKE
H14	CHECK HEGO INTEGRITY		
	HEGO always lean, slow to switch or lack of switching; fuel at adaptive limit could be caused by: — Moisture inside the HEGO sensor/harness connector resulting in a short to ground. — HEGO sensor being coated with contaminants. — HEGO circuit open. — HEGO circuit shorted to ground. ● Key off. ● Inspect the HEGO harness for chaffing, burns or other indications of damage. Service as necessary. ● Inspect HEGO sensor and connector for indication of submerging in water, oil, coolant, etc. Service as necessary. ● Run engine at 2000 rpm for two minutes. ● Key off. ● Run Engine Running Self Test. ● **Are fault codes present?**	Yes ▶ No ▶	**For engines with** **— MAP sensor:** GO to H15. **— MAF sensor:** GO to H16. GO to H21.

Pinpoint Test H14

TEST STEP		RESULT ▶	ACTION TO TAKE
H15	CHECK HEGO SENSOR ON ENGINES WITH MAP SENSORS		
	NOTE: **Vacuum/air leaks in non-EEC-IV areas could also cause Code 41, 91, 136, 172 or 176. Check for:** — **Leaking vacuum actuator (e.g. A/C control motor)** — **Engine sealing** — **EGR system** — **PCV system** — **Lead contaminated HEGO sensor** ● Key off. ● Verify MAP sensor output voltage (refer to procedure in Pinpoint Test DF3). ● Disconnect appropriate HEGO sensor from vehicle harness. **For 4 wire HEGO (refer to schematic):** — Connect DVOM to HEGO SIGNAL and HEGO GND or SIG RTN at the HEGO sensor connector. **For 3 wire HEGO (refer to schematic):** — Connect DVOM to HEGO SIGNAL at the sensor and battery negative post. ● Disconnect and plug vacuum line at MAP sensor. ● DVOM on 20 volt scale. ● Start engine and apply 10-14 in-Hg (33-46 kPa) to MAP sensor. ● Run engine at approximately 2000 rpm for two minutes. ● **Does the DVOM indicate greater than 0.5 volts within two minutes?**	Yes ▶ No ▶	GO to H17. REPLACE HEGO sensor. RECONNECT MAP sensor vacuum line. RERUN Quick Test.

Pinpoint Test H15

TEST STEP		RESULT ▶	ACTION TO TAKE
H16	CHECK HEGO SENSOR ON ENGINES WITH MAF SENSOR		
	NOTE: **The purpose of this test is to verify the HEGO sensor can generate greater than 0.5 volts during Engine Running Self-Test.** Any Vacuum / air leaks in non-EEC-IV areas could also cause Code 41, 91, 136, 172 or 176. Check for: — Leaking vacuum actuator (e.g. A/C control motor). — Engine sealing. — EGR system. — PCV system. — Unmetered air leak between Mass Air Flow sensor and throttle body. — Lead contaminated HEGO sensor. ● Key off. ● Disconnect appropriate HEGO sensor from vehicle harness. **For 4 wire HEGO (refer to schematic):** — Connect DVOM to HEGO SIGNAL and HEGO GND at the HEGO sensor connector. **For 3 wire HEGO (refer to schematic):** — Connect DVOM to HEGO SIGNAL at the sensor and battery negative post. ● DVOM on 20 volt scale. ● Run engine at approximately 2000 rpm for two minutes. ● Rerun Engine Running Self-Test and monitor HEGO sensor voltage. ● **Does DVOM indicate greater than 0.5 volts at the end of Self-Test?**	Yes ▶ No ▶	GO to H17. REPLACE HEGO sensor. RERUN Quick Test.

Pinpoint Test H16

TEST STEP		RESULT ▶	ACTION TO TAKE
H17	CHECK CONTINUITY OF HEGO SIGNAL AND HEGO GROUND		
	● Key off. ● Disconnect processor from breakout box. ● Disconnect suspect HEGO sensor from vehicle harness. Inspect both ends of connector for damaged or pushed out pins, moisture, corrosion, loose wires, etc. Service as necessary. ● Measure resistance between HEGO SIGNAL Test Pin at the breakout box and HEGO SIGNAL at the vehicle harness connector. **For 3-wire HEGO (refer to schematic):** — Measure resistance between HEGO GND Test Pin at the breakout box and battery negative post. **For 4-wire HEGO (refer to schematic):** — Measure resistance between HEGO GND Test Pin at the breakout box and HEGO GND at the vehicle harness connector. — Where applicable measure resistance between HEGO GND and SIG RTN at the breakout box. ● **Is each resistance less than 5.0 ohms?**	Yes ▶ No ▶	GO to H18 SERVICE open circuit. REMOVE breakout box. RECONNECT processor, HEGO sensor, and any other components that have been disconnected. DRIVE vehicle 5 miles / 55 mph. RERUN Quick Test.

Pinpoint Test H17

TEST STEP		RESULT	ACTION TO TAKE
H18	CHECK HEGO CIRCUIT FOR SHORT TO GROUND		
	• Key off. • Breakout box installed, processor disconnected. • HEGO disconnected. • Measure resistance between the HEGO SIGNAL Test Pin at the breakout box and Test Pins 40, 46 or 49 where applicable at the breakout box. • **Is each resistance greater than 10,000 ohms?**	Yes No	GO to H19. SERVICE short circuit. REMOVE breakout box. RECONNECT processor, HEGO sensor, and any other components that are disconnected. DRIVE vehicle 5 miles/55 mph. Rerun Quick Test

Pinpoint Test H18

TEST STEP		RESULT	ACTION TO TAKE
H19	CHECK HEGO SENSOR FOR SHORT TO GROUND		
	• Key off. • Breakout box installed, processor disconnected. • HEGO disconnected. • Measure resistance between PWR GND and HEGO SIGNAL at the HEGO sensor connector. • For 4 wire HEGO (refer to schematic). Also measure resistance between HEGO GND and/or SIG RTN at the HEGO sensor connector. • **Is resistance greater than 10,000 ohms?**	Yes No	**For codes:** 144/41C, 139/91C, 171, 174, 175 or 176, GO to H90. **For other codes:** — MAP sensor: GO to H20. — MAF Sensor: REMOVE breakout box. RECONNECT HEGO sensor. REPLACE processor. DRIVE vehicle 5 miles/55 mph. RERUN Quick Test. REPLACE HEGO sensor. REMOVE breakout box. RECONNECT processor. DRIVE vehicle 5 miles/55 mph. RERUN Quick Test.

Pinpoint Test H19

TEST STEP		RESULT	ACTION TO TAKE
H20	ATTEMPT TO ELIMINATE CODE 41/172, 91/136 or 176 ON ENGINES WITH MAP SENSOR		
	• Key off. • Breakout box installed. • Disconnect and plug MAP vacuum line. • Connect processor to breakout box. • Reconnect HEGO sensor. • Start engine and apply 10-14 in-Hg (34-47 kPa) vacuum to MAP sensor. • Run engine at approximately 2000 rpm for two minutes. Allow engine to return to idle. • Rerun Engine Running Self-Test. NOTE: **If you are here for Continuous Memory Codes the vehicle has to be driven 5 miles/55 mph.** • **Is Code 41/172, 91/136 or 176 still present (ignore all other codes)?**	Yes No	REMOVE breakout box. RECONNECT MAP sensor vacuum line. If engine runs rough, GO to S2. All others REPLACE processor. DRIVE vehicle 5 miles/55 mph. RERUN Quick Test. REMOVE breakout box. RECONNECT processor and MAP sensor vacuum line. HEGO sensor input OK. Fuel delivery is OK. Problem is in an area common to all cylinders, i.e. air/vacuum leak, fuel contamination, EGR Thermactor, CHECK MAP frequency, IGN System, etc. (SERVICE as necessary.)

Pinpoint Test H20

TEST STEP		RESULT ▶	ACTION TO TAKE
H21	CHECK RESISTANCE OF HEATER ELEMENT ON HEGO		
	• Key off. • Disconnect suspect HEGO sensor from vehicle harness. • Inspect both ends of the connector for damaged or pushed out pins, moisture, corrosion, loose wires, etc. Service as necessary. • Measure resistance between KEY PWR circuit and PWR GND circuit at HEGO sensor connector (refer to schematic). — Hot to warm resistance specification is 5.0 to 30.0 ohms. — Room temperature resistance specification is 2.0 to 5.0 ohms. • **Is resistance within specification?**	Yes ▶ No ▶	GO to H22. REPLACE HEGO sensor. RERUN Quick Test.

Pinpoint Test H21

TEST STEP		RESULT ▶	ACTION TO TAKE
H22	CHECK FOR POWER AT HEGO HARNESS CONNECTOR		
	• Key on, engine off. • HEGO disconnected. • Measure voltage between KEY POWER circuit and PWR GND circuit at the HEGO vehicle harness connector (refer to schematic). • **Is voltage greater than 10.5 volts?**	Yes ▶ No ▶	RECONNECT HEGO sensor. HEGO sensor system OK. Fuel delivery is OK. HEGO sensor may have cooled prior to Engine Running Self-Test. If symptom persists, problem is in an area common to all cylinders, i.e. air/vacuum leak, fuel contamination, EGR Thermactor, MAP. CHECK MAP frequency, ignition system, etc. SERVICE as necessary. GO to H23.

Pinpoint Test H22

TEST STEP		RESULT ▶	ACTION TO TAKE
H23	CHECK CONTINUITY OF POWER GROUND CIRCUIT		
	• Key off. • HEGO disconnected. • Measure resistance between PWR GND circuit at the HEGO vehicle harness connector and battery negative post. • **Is resistance less than 5.0 ohms?**	Yes ▶ No ▶	SERVICE open in KEY PWR circuit. RECONNECT HEGO sensor. RERUN Quick Test. SERVICE open in PWR GND circuit. RECONNECT HEGO sensor. RERUN Quick Test.

Pinpoint Test H23

TEST STEP		RESULT	ACTION TO TAKE
H24	CHECK HEGO SIGNAL FOR SHORT TO POWER		
	With dual HEGO, Code 42/173 refers to right or rear HEGO; Code 92/137, 177 refers to left or front HEGO. HEGO always rich could be caused by: — Moisture inside HEGO harness connector resulting in a short to power. — HEGO circuit shorted to power. • Key off. • Disconnect the suspect HEGO sensor from vehicle harness. • Inspect both ends of the connector for damaged or pushed out pins, moisture, corrosion, loose wires, etc. Service as necessary. • Key on, engine off. • Measure voltage between HEGO SIG and PWR GND at the HEGO vehicle harness connector (refer to schematic). • **Is voltage less than 0.5 volts?**	Yes No	GO to H26. GO to H25.

Pinpoint Test H24

TEST STEP		RESULT	ACTION TO TAKE
H25	CHECK FOR SHORT TO POWER		
	• Key off. • Inspect HEGO GND and HEGO signal harness for chaffing, burns or other indications of short to power. Service as necessary. • Disconnect processor 60 pin connector. Inspect for damaged, or pushed out pins, corrosion, loose wires etc. Service as necessary. • Install breakout box, leave processor disconnected. • Suspect HEGO disconnected. • Measure resistance between HEGO SIG, and KEYPWR at the breakout box. • **Is the resistance greater than 10,000 ohms?**	Yes No	REPLACE processor. REMOVE breakout box. RECONNECT HEGO. DRIVE vehicle 5 miles/55 mph. RERUN Quick Test. SERVICE short to power. REMOVE breakout box. RECONNECT processor. DRIVE vehicle 5 miles/55 mph. RERUN Quick Test.

Pinpoint Test H25

TEST STEP		RESULT	ACTION TO TAKE
H26	CHECK HEGO SENSOR FOR SHORT TO IGNITION RUN CIRCUIT		
	• Key off. • HEGO disconnected. • Measure resistance between KEY PWR circuit and HEGO SIG circuit at the HEGO sensor connector (refer to schematic). • **Is resistance greater than 10,000 ohms?**	Yes No	**For Codes 42/173, 92/137, 177:** GO to H27. **For Codes 171, 174, 175, 178: MAP sensor:** GO to H28. **MAF sensor:** GO to H30. REPLACE HEGO sensor. DRIVE vehicle 5 miles/55 mph. RERUN Quick Test.

Pinpoint Test H26

TEST STEP		RESULT ▶	ACTION TO TAKE
H27	ATTEMPT TO GENERATE CODE 41/172, 91/136, 176		
	• Key off. • HEGO disconnected. • Jumper HEGO SIG circuit at the HEGO vehicle harness connector to battery negative post. • Rerun Engine Running Self-Test. • **Is Code 41/172, 91, 136 or 176 present?**	Yes ▶ No ▶	REMOVE jumper. **For Engines With MAP Sensor:** GO to H28. ▶ **MAF sensor:** GO to H30. REMOVE jumper. RECONNECT HEGO sensor. DISCONNECT processor 60 pin connector. Inspect for damaged or pushed out pins, corrosion, loose wires, etc. SERVICE as necessary. If OK REPLACE processor. DRIVE vehicle 5 miles/55 mph. RERUN Quick Test.

Pinpoint Test H27

TEST STEP		RESULT ▶	ACTION TO TAKE
H28	CHECK MAP SENSOR FOR VACUUM LEAK		
	NOTE: **Due to the MAP sensor's large influence on fuel control, there is a possibility that MAP could be at fault without a Code 22/126. Therefore the next two Test Steps will verify proper vacuum to the MAP sensor and its ability to hold vacuum.** • Key off. • Disconnect vacuum line from MAP sensor. • Inspect hose for blockage (kinks or gel build up), damage from wear or aging. Service as necessary. • Plug vacuum hose at the MAP side. • Connect a vacuum pump to the MAP sensor and apply 18 in-Hg (60 kPa) vacuum to MAP sensor. • **Does MAP sensor hold vacuum?**	Yes ▶ No ▶	RELEASE vacuum. GO to H29. REPLACE MAP sensor. REMOVE vacuum pump. RECONNECT HEGO sensor. DRIVE vehicle 5 miles/55 mph. RERUN Quick Test.

Pinpoint Test H28

TEST STEP		RESULT ▶	ACTION TO TAKE
H29	CHECK FOR LOSS OF VACUUM TO MAP SENSOR		
	• Tee a vacuum gauge into the manifold vacuum line at MAP sensor • Start the engine and let rpm stabilize. Note vacuum level. • Key off. • REMOVE vacuum gauge and Tee and reconnect vacuum line to MAP sensor. • Tee in vacuum gauge at a different source of intake manifold vacuum and restart the engine. Note vacuum level. • **Does the vacuum level differ greater than 1.0 in-Hg (3.4 kPa)?**	Yes ▶ No ▶	INSPECT engine vacuum integrity. SERVICE as necessary. REMOVE vacuum gauge and Tee. RECONNECT HEGO sensor. DRIVE vehicle 5 miles/55 mph. RERUN Quick Test. GO to H30.

Pinpoint Test H29

TEST STEP	RESULT ▶	ACTION TO TAKE
H30 HEGO SENSOR CHECK		
• Key off. • HEGO sensor disconnected. **For 4 wire HEGO (refer to schematic):** — Connect DVOM to HEGO SIGNAL and HEGO GND or SIG RTN at the HEGO sensor connector. **For 3 wire HEGO (refer to schematic):** — Connect DVOM to HEGO SIGNAL at the HEGO sensor connector and to battery negative post. • DVOM on 20 volt scale. • Create a vacuum leak to cause HEGO sensor to go lean. **For all engines with MAF sensors:** — Disconnect any vacuum hose from the manifold vacuum tree. **For all other applications:** • Disconnect the PCV valve hose from the PCV valve. • Start engine and run at approximately 2000 rpm. • **Does the DVOM indicate less than 0.4 volts within 30 seconds?**	Yes ▶ No ▶	GO to H90. REPLACE HEGO sensor. RECONNECT vacuum hoses. DRIVE vehicle 5 miles / 55 mph. RERUN Quick Test.

Pinpoint Test H30

TEST STEP	RESULT ▶	ACTION TO TAKE
H90 CHECK CONTINUOUS MONITOR MODE		
• Key off. • Verify engine at operating temperature. • Start engine and run at 2000 rpm for two minutes. • With engine rpm at idle enter Engine Running Continuous Monitor Mode.	Yes ▶	ISOLATE fault and SERVICE as necessary. REMOVE breakout box. CLEAR Continuous Memory Codes RERUN Quick Test.
• Observe VOM or STAR LED for indication of fault. • Wiggle, shake or bend a small section of the EEC-IV harness while working your way from the HEGO sensor to the processor. • Wiggle, shake or bend a small section of the EEC-IV harness while working your way from the HEGO GND to the processor. • **Is a fault indicated?**	No ▶	REMAIN in Engine Running Continuous Monitor Mode. GO to H91.

Pinpoint Test H90

TEST STEP	RESULT ▶	ACTION TO TAKE
H91 CONTINUOUS MONITOR TEST DRIVE CHECK		
• Remain in Engine Running Continuous Monitor Mode. • Test drive vehicle at 55 mph with minimum road load for five miles. • Continue to drive on a rough road at 55 mph for five miles. • If possible drive vehicle through a pool of water on the road to shower the HEGO sensor and / or connector. • **Is a fault indicated?**	Yes ▶	ISOLATE fault and SERVICE as necessary. REMOVE breakout box. CLEAR Continuous Memory Code. RERUN Quick Test.
	No ▶	EXIT Engine Running Continuous Monitor Mode GO to H92.

Pinpoint Test H91

TEST STEP		RESULT ▶	ACTION TO TAKE
H92	CHECK HEGO SWITCHING • Key off. • Inspect EEC-IV wire harness for proper routing and insulation; burnt, chaffed, intermittently shorted or open. Service as necessary. • Disconnect processor 60 pin connector and inspect for damaged or pushed out pins, corrosion, loose wires, etc. Service as necessary. • Install breakout box and connect processor to breakout box. • Connect analog voltmeter to the suspect HEGO sensor test pin and HEGO GND at the breakout box. • Test drive vehicle at 55 mph with minimum roadload for five miles. • Observe voltmeter for HEGO switching from .3 to .9 volts within three seconds. • **Did HEGO voltage switch?**	Yes ▶ No ▶	Unable to duplicate or identify fault at this time. **CLEAR Continuous Memory Codes.** For further diagnosis using the EEC-IV monitor box, REFER to INTERMITTENT FAULT DIAGNOSIS. REPLACE HEGO sensor. REMOVE breakout box. RECONNECT processor. RERUN Quick Test.

Pinpoint Test H92

All Engines
Values Are In Ohms

2.3L	3.0L 4.0L/4.9L	5.0L/5.8L 7.0L/7.5L
6.0 - 8.5	4.0 - 5.5	3.0 - 4.0

Injector Bank Resistance Table 1

All Engines
Values Are In Ohms

ALL ENGINES
11.0 - 18.0

Single Injector Resistance Specification Table 2

Fuel Pressure Specification Table

	2.3L 4.9L HSC EFI SEFI TRK	3.0L SHO SEFI	3.8L SC SEFI	ALL OTHER CAR APPLICATIONS	ALL OTHER TRUCK APPLICATIONS
ENGINE RUNNING	45-60 PSI 310-415 kPa	28-33 PSI 193-227 kPa	30-40 PSI 210-280 kPa	30-45 PSI 210-310 kPa	30-45 PSI 210-310 kPa
KEY ON ENGINE OFF	50-60 PSI 345-415 kPa	30-45 PSI 210-310 kPa	35-40 PSI 240-280 kPa	35-40 PSI 240-280 kPa	35-45 PSI 240-310 kPa

Fuel Pressure

MAP/BP Sensor Tester Table

Approximate Altitude (Ft.)	Voltage Output (+/-.04 Volts)
0	1.59
1000	1.56
2000	1.53
3000	1.50
4000	1.47
5000	1.44
6000	1.41
7000	1.39

MAP/BP Sensor Table

HA - Testing Notes

NOTE: You should enter this Pinpoint Test only when you have been directed here from Quick Test.

ADAPTIVE FUEL

The Prosessor uses "adaptive fuel" logic primarily to compensate for normal variability in fuel system components. If, during normal vehicle

operation, the fuel system appears "biased" rich or lean, adaptive fuel will make a corresponding "shift" in the fuel delivery calculations to compensate and remove the bias.

TEST STEP		RESULT ▶	ACTION TO TAKE
HA1	CHECK FOR OTHER DIAGNOSTIC TROUBLE CODES (DTCS)		
		Yes ▶	SERVICE them as required.
		No ▶	GO to HA2.

DTC	HO2S Orientation	Fault Definition
181	Right or Rear	Rich limit reached.
183	Right or Rear	Rich limit reached at idle.
189	Left or Front	Rich limit reached.
192	Left or Front	Rich limit reached at idle.
These DTCs indicate that the system is running lean, although strategy adjusted it to Max. rich.		
179	Right or Rear	Lean limit reached.
182	Right or Rear	Lean limit reached at idle.
188	Left or Front	Lean limit reached.
191	Left or Front	Lean limit reached at idle.
These DTCs indicate that the system is running rich, although strategy adjusted it to Max. lean.		

Possible Causes:

- Fuel pressure
- Fuel injector
- Air intake
- MAP sensor
- Fuel injector electrical circuit
- Fuel filter
- Vacuum
- Air filter
- **Are any other DTCs present?**

Pinpoint Test HA1

TEST STEP		RESULT ▶	ACTION TO TAKE
HA2	CHECK FUEL PRESSURE		
	WARNING: THE FUEL SYSTEM WILL REMAIN PRESSURIZED WHEN ENGINE IS NOT RUNNING. TO PREVENT INJURY OR FIRE USE CAUTION WHEN WORKING ON THE FUEL SYSTEM.	Yes ▶	GO to HA3.
	• Key off. • Install fuel pressure gauge. • Verify that manifold vacuum is connected to the fuel pressure regulator if applicable. • Start and run engine at idle. Note fuel pressure. • Refer to Fuel Pressure Specification Table. • **Is fuel pressure within specification?**	No ▶	VERIFY integrity of fuel pressure regulator, vacuum line, fuel filter and fuel lines. REFER to fuel delivery and air induction.

Pinpoint Test HA2

TEST STEP		RESULT ▶	ACTION TO TAKE
HA3	CHECK SYSTEM'S ABILITY TO HOLD FUEL PRESSURE		
	• Cycle the key on and off several times. Note the fuel pressure. • Visually look for fuel leaking at the injector O-ring, fuel pressure regulator, and the fuel lines to the fuel charging assembly. Service as necessary. • **Does fuel pressure remain at specification for 60 seconds?**	Yes ▶	VERIFY integrity of air intake, air filter, no vacuum leaks, EGR valve closed. **For vehicles with MAP/BARO:** GO to HA4. **For all others:** GO to HA6.
		No ▶	REFER to fuel delivery and air induction.

Pinpoint Test HA3

TEST STEP		RESULT ▶	ACTION TO TAKE
HA4	CHECK MAP/BARO FREQUENCY		
	• Key off. • Connect MAP/BARO tester. • Key on. • Refer to MAP/BARO Frequency Charts to check MAP/BARO frequency. It may be necessary to measure several known good MAP/BARO sensors on available vehicles to determine your area's typical reading for that day. • **Is MAP/BARO frequency within specification?**	Yes ▶	**For vehicles with MFI:** GO to HA5. **All others:** GO to HA6.
		No ▶	CHECK wiring to MAP/BARO sensor for corrosion, high resistance, etc. If OK, REPLACE MAP/BARO sensor. CLEAR KAM. RERUN Quick Test.

Pinpoint Test HA4

TEST STEP		RESULT ▶	ACTION TO TAKE
HA5	DIAGNOSTIC TEST MODE (DTM): MFI ENGINES		
	• Connect tachometer to engine. Run engine at idle. • Disconnect and reconnect the injectors one at a time: Note rpm drop for each injector. • **Does each injector produce a momentary drop in rpm?** NOTE: **IAC will attempt to re-establish rpm.**	Yes ▶	GO to Ignition System: System Diagnosis
		No ▶	GO to HA7.

Pinpoint Test HA5

TEST STEP		RESULT ▶	ACTION TO TAKE
HA6	DIAGNOSTIC TEST MODE (DTM): SFI ENGINES		
	The DTM switches each injector OFF and ON one at a time. Diagnostic Trouble Codes (DTC) correspond to the cylinder number, (i.e. DTC 30 indicates a problem with cylinder No. 3, a DTC 90 indicates a pass.) The DTM is designed to aid in the detection of a weak or non-contributing cylinder. The Pinpoint Test Steps are designed to isolate only EEC related problems.	Yes ▶	GO to Ignition System: System Diagnosis
		No ▶	GO to HA8.
	• Run the Engine Running Self-Test. • After the last repeated code, wait 5-10 seconds. • "Goose" throttle lightly (not wide-open-throttle). • DTM will be performed. Time of test is approximately 2-3 minutes. • **Is Code 90 present?**		

CYLINDER BALANCE TABLE
DTC VS. CYLINDER

DIAGNOSTIC TROUBLE CODE (DTC)	90	10	20	30	40	50	60	70	80	77/538
CYLINDER/INJECTOR NUMBER	PASS	1	2	3	4	5	6	7	8	RERUN TEST*

*If throttle is touched (moved) during the Test, DTC Code 77/538 will appear, indicating test was not completed. DTC Code 538 could also be output if a Continuous Memory DTC 214(CID) is present. If Continuous Memory DTC is present refer to the appropriate code chart for service direction.

Pinpoint Test HA6

TEST STEP		RESULT ▶	ACTION TO TAKE
HA7	CHECK RESISTANCE OF INJECTOR(S) AND HARNESS MFI ENGINES.		
	• Key off. • Disconnect Powertrain Control Module (PCM). Inspect for damaged or pushed out pins, corrosion, loose wires, etc. Service as necessary. NOTE: **This erases Continuous Memory.** • Install breakout box, leave PCM disconnected. • Measure resistance of INJECTOR BANK 1 between Test Pin 37 and Test Pin 58 at the breakout box. Record resistance. • Measure resistance of INJECTOR BANK 2 between Test Pin 37 and Test Pin 59 at the breakout box. Record resistance. • Refer to Injector Resistance Specification Table 1. • **Is each resistance within specification?**	Yes ▶	GO to HA12.
		No ▶	GO to HA9.

Pinpoint Test HA7

TEST STEP		RESULT ▶	ACTION TO TAKE
HA8	CHECK RESISTANCE OF INJECTOR(S) AND HARNESS SFI ENGINES		
	• Key off. • Disconnect Powertrain Control Module (PCM). Inspect for damaged or pushed out pins, corrosion, loose wires, etc. Service as necessary. NOTE: **This erases Continuous Memory.** • Install breakout box, leave PCM disconnected. • Measure resistance between the suspect INJECTOR circuit Test Pin and Test Pin 37 at the breakout box. Record resistance. • **Is each resistance within specification?**	Yes ▶ No ▶	GO to HA12. GO to HA9.

Pinpoint Test HA8

TEST STEP		RESULT ▶	ACTION TO TAKE
HA9	CHECK CONTINUITY OF FUEL INJECTOR HARNESS		
	• Key off. • Breakout box installed, PCM disconnected. • Disconnect injector vehicle harness connector at the suspect injector. • Measure resistance between Test Pin 37 / 57 at the breakout box and the VPWR pin at the injector vehicle harness connector. • Refer to the Pinpoint Test H Schematic for the appropriate injector pin identification. • Measure resistance between the injector test pin(s) at the breakout box and the same injector circuit signal pin at the each injector vehicle harness connector. • **Is each resistance less than 5.0 ohms?**	Yes ▶ No ▶	GO to HA10. SERVICE open circuit. REMOVE breakout box. RECONNECT PCM and injectors. DRIVE vehicle 5 miles / 55 mph. RERUN Quick Test.

Pinpoint Test HA9

TEST STEP		RESULT ▶	ACTION TO TAKE
HA10	CHECK INJECTOR HARNESS CIRCUIT FOR SHORT TO POWER OR GROUND		
	• Key off. • Breakout box installed, PCM disconnected. • Suspect fuel injector vehicle harness disconnected. • Refer to the Pinpoint Test H Schematic for the appropriate injector pin identification. • Measure resistance between the injector test pin(s) and Test Pin 37 / 57, 40, 46 and 60 at the breakout box. • Measure resistance between the injector test pin(s) at the breakout box and chassis ground. • **Is each resistance greater than 10,000 ohms?**	Yes ▶ No ▶	**For SFI:** REPLACE injector per Cylinder Balance DTM fault code. RERUN Quick Test. **For MFI:** GO to HA11. SERVICE short circuit. REMOVE breakout box. RECONNECT PCM and injectors. DRIVE vehicle 5 miles / 55 mph. RERUN Quick Test.

Pinpoint Test HA10

TEST STEP		RESULT ▶	ACTION TO TAKE
HA11	ISOLATE FAULTY INJECTOR CIRCUIT		
	• Key off. • Breakout box installed, PCM disconnected. • Disconnect all injectors on suspect bank. • DVOM on 200 ohm scale. • Connect one injector and measure resistance between Test Pin 37 and either Test Pin 58 or 59 as appropriate. • Disconnect that injector and repeat process for each of the remaining injectors. • Refer to Injector Resistance Specification Table 2. • **Is each resistance within specification for the appropriate engine?**	Yes ▶ No ▶	GO to HA12. REPLACE injector. REMOVE breakout box. RECONNECT PCM and injectors. DRIVE vehicle 5 miles/55 mph. RERUN Quick Test.

Pinpoint Test HA11

TEST STEP		RESULT ▶	ACTION TO TAKE
HA12	CHECK INJECTOR DRIVER SIGNAL		
	Requires standard non-powered 12 volt test lamp. • Key off. • Breakout box installed. • Connect PCM to breakout box. • **For MFI:** — Connect test lamp between Test Pin 37 and Test Pin 58 at the breakout box. — Connect test lamp between Test Pin 37 and 59 at the breakout box. • **For SFI:** — Connect test lamp between Test Pin 37 and the suspect injectors Test Pin at the breakout box. • Crank or start engine. NOTE: **Properly operating systems will show a dim glow on the lamp.** • **Is glow on lamp dim?**	Yes ▶ No ▶	REMOVE breakout box. RECONNECT PCM. Follow instructions of the injector test equipment in fuel delivery and air induction. Also refer to ignition system for other possible causes. After any servicing, DRIVE vehicle 5 miles/55 mph. RERUN Quick Test and Cylinder Balance DTM. **No light/Bright light:** REPLACE PCM. REMOVE breakout box. DRIVE vehicle 5 miles/55 mph. RERUN Quick Test.

Pinpoint Test HA12

J - Testing Notes

NOTE: You should enter this Pinpoint Test only when you have been directed here from Diagnostic Routines.

REMEMBER

This Pinpoint Test is intended to diagnose only the following:

- Fuel Pump Relay

- Inertia Switch

- Harness circuits: BATT(+), VPWR, FP, GND and Power-to-pumps

- Processor assembly

DESCRIPTION

The Fuel Pump Relay is a normally open relay that is used to supply voltage to the electric fuel pump. When the ignition key is turned to START or RUN position, the processor grounds Pin 22 (FP), which activates the relay (closes the contacts) and sends voltage to the fuel pump. If, within 1-2 seconds, the processor does not receive an ignition PIP signal (indicating the engine is not turning), Pin 22 will be ungrounded and the fuel pump will turn off.

The Inertia Switch is a safety device that is wired into either the primary circuit (coil side) or secondary circuit (contact side). In the event of a collision the inertia switch will open and voltage will be cut off to the fuel pump.

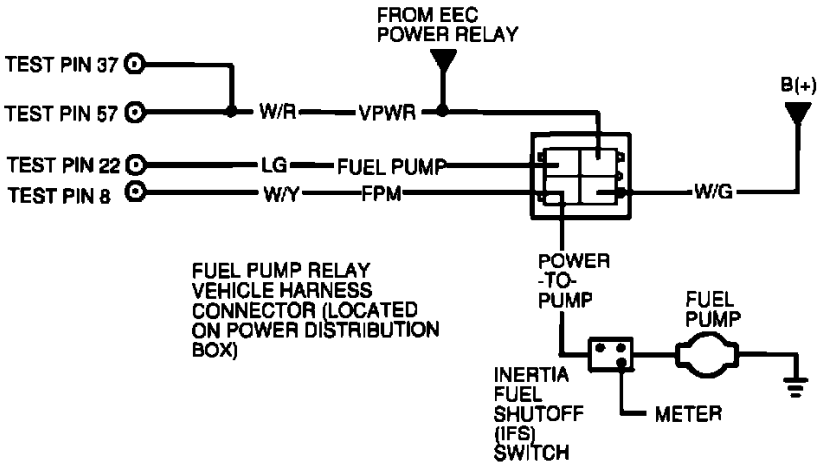

Schematic Diagram

	TEST STEP	RESULT ▶	ACTION TO TAKE
J1	DIAGNOSTIC TROUBLE CODE (DTC) 87 / 556: CHECK FOR VPWR TO FUEL PUMP RELAY		
	DTC 87 / 556 indicates a fuel pump primary circuit failure. Possible causes: — Inertia Fuel Shutoff (IFS) switch not reset or electrically open (if in primary circuit). — Open or shorted circuit. — Damaged fuel pump relay. — Damaged Powertrain Control Module (PCM). • Disconnect fuel pump relay. • Key on, engine off. • Measure voltage between VPWR circuit at the fuel pump relay vehicle harness connector and chassis ground. • **Is voltage greater than 10.5 volts?**	Yes ▶ No ▶	GO to J2. VERIFY integrity of IFS switch. If OK, SERVICE open in VPWR circuit between the EEC power relay and the fuel pump relay. RECONNECT fuel pump relay. RERUN Quick Test.

Pinpoint Test J1

TEST STEP		RESULT ▶	ACTION TO TAKE
J2	CHECK FUEL PUMP RELAY		
	• Key off. • Fuel pump relay disconnected. • DVOM on 200 ohm scale. • Check fuel pump relay coil resistance: — For "ISO" relays, measure resistance between Pins 85 and 86 at the fuel pump relay (pin numbers molded on relay). — For other types of relays, measure resistance between VPWR pin and fuel pump circuit pin at the fuel pump relay. — Resistance should be between 40 and 85 ohms. • DVOM on 10,000 ohm scale. • Check fuel pump relay for internal shorts. — For "ISO" relays, measure resistance between Pin 85 and both Pins 30 and 87 at the fuel pump relay. — For other types of relays, measure resistance between the fuel pump circuit pin and both the power-to-pump and B(+) pins at the fuel pump relay. — Both resistances should be greater than 10,000 ohms. • **Are all resistance checks OK?**	Yes ▶ No ▶	GO to J3. REPLACE fuel pump relay. RERUN Quick Test.

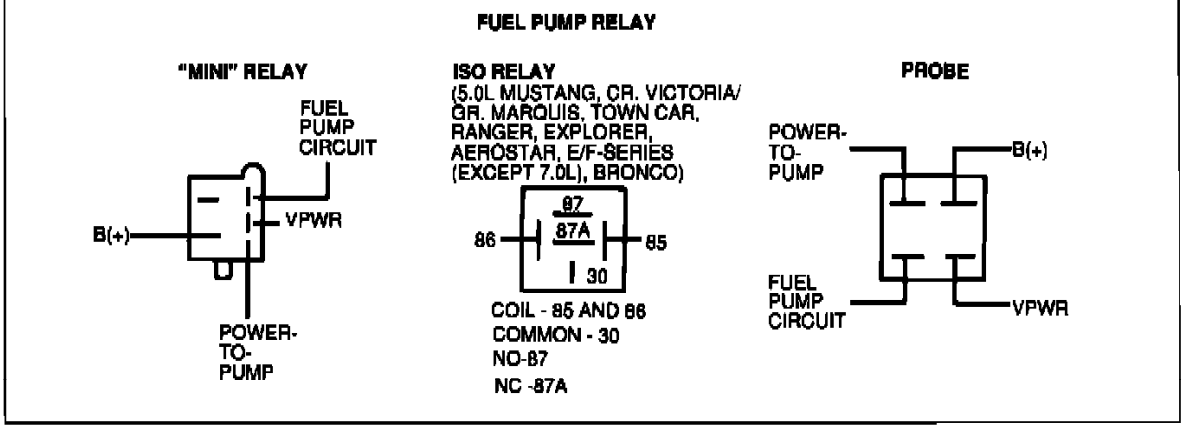

Pinpoint Test J2

TEST STEP		RESULT ▶	ACTION TO TAKE
J3	CHECK FUEL PUMP CIRCUIT FOR SHORT TO POWER		
	• Key off. • Fuel pump relay disconnected. • Disconnect Powertrain Control Module (PCM). Inspect for damaged or pushed out pins, corrosion, loose wires, etc. Service as necessary. • Install breakout box, leave PCM disconnected. • Key on, engine off. • Measure voltage between Test Pin 22 at the breakout box and battery negative post. • **Is voltage less than 1.0 volt?**	Yes ▶ No ▶	GO to J4. SERVICE short circuit. REMOVE breakout box. RECONNECT all components. ATTEMPT to start vehicle. If vehicle fails to start, REPLACE PCM. RERUN Quick Test.

Pinpoint Test J3

TEST STEP		RESULT ▶	ACTION TO TAKE
J4	CHECK FUEL PUMP CIRCUIT FOR SHORT TO GROUND		
	• Key off. • Breakout box installed, PCM disconnected. • Fuel pump relay disconnected. • Measure resistance between Test Pin 22 and Test Pins 40 and 60 at the breakout box. • **Is resistance greater than 10,000 ohms?**	Yes ▶ No ▶	GO to J5. SERVICE short circuit. REMOVE breakout box. RECONNECT all components. RERUN Quick Test.

Pinpoint Test J4

TEST STEP		RESULT ▶	ACTION TO TAKE
J5	CHECK FUEL PUMP CIRCUIT CONTINUITY		
	• Key off. • Breakout box installed, PCM disconnected. • Fuel pump relay disconnected. • Measure resistance between fuel pump circuit at the fuel pump relay vehicle harness connector and Test Pin 22 at the breakout box. • **Is resistance less than 5.0 ohms?**	Yes ▶ No ▶	REPLACE PCM. RECONNECT fuel pump relay. RERUN Quick Test. SERVICE open circuit. REMOVE breakout box. RECONNECT all components. RERUN Quick Test.

Pinpoint Test J5

TEST STEP		RESULT ▶	ACTION TO TAKE
J10	DIAGNOSTIC TROUBLE CODE (DTC) 95/542: DOES ENGINE START		
	DTC 95/542 indicates that one of the following has occurred: No Start: — Inertia Fuel Shutoff (IFS) switch not reset or electrically open (if in secondary circuit). — Open circuit between the fuel pump and FPM circuit connection to the power-to-pump circuit. — Poor fuel pump ground. — Fuel pump electrically open. Engine Starts: — Fuel pump secondary circuit short to power. — Fuel pump relay contacts always closed. — Open in FPM circuit between PCM and connection to the power-to-pump circuit. — Left/front HO2S short to power (dual HO2S applications). — Damaged Powertrain Control Module (PCM). • **Does the engine start (For trucks with dual fuel tanks, verify tank selector is in the same position it was when KOEO DTC 542 was received)?**	Yes ▶ No ▶	GO to J11. GO to J15.

Pinpoint Test J10

TEST STEP		RESULT ▶	ACTION TO TAKE
J11	VERIFY THAT FUEL PUMP IS OFF		
	• Key on, wait five seconds. • Listen for motor noise from fuel pump. • **Is fuel pump off?**	Yes ▶ No ▶	GO to J13. GO to J12.

Pinpoint Test J11

TEST STEP		RESULT ▶	ACTION TO TAKE
J12	CHECK FOR FUEL PUMP RELAY ALWAYS CLOSED		
	• Key off. • Locate and disconnect fuel pump relay. • Key on. • **Is fuel pump off with relay disconnected?**	Yes ▶ No ▶	REPLACE fuel pump relay. RERUN Quick Test. SERVICE short to power in power-to-pump / FPM circuit. (For applications with Relay Block, also CHECK fuel pump prime plug circuit (if equipped). REFER to schematic). RECONNECT fuel pump relay. RERUN Quick Test.

Pinpoint Test J12

TEST STEP		RESULT ▶	ACTION TO TAKE
J13	CHECK FPM CIRCUIT CONTINUITY		
	• Key off. • Disconnect Powertrain Control Module (PCM). Inspect for damaged or pushed out pins, corrosion, loose wires, etc. Service as necessary. • Install breakout box, leave PCM disconnected. • Disconnect fuel pump relay. • Measure resistance between Test Pin 8 (Test Pin 19 for Escort / Tracer and Mustang) at the breakout box and power-to-pump circuit at the fuel pump relay vehicle harness connector. • **Is resistance less than 5.0 ohms?**	Yes ▶ No ▶	**For dual HO2S applications:** RECONNECT fuel pump relay. GO to J25. **All others:** REPLACE PCM. REMOVE breakout box. RECONNECT fuel pump relay. RERUN Quick Test. SERVICE open circuit. REMOVE breakout box. RECONNECT all components. RERUN Quick Test.

Pinpoint Test J13

TEST STEP		RESULT ▶	ACTION TO TAKE
J15	CHECK INERTIA FUEL SHUTOFF (IFS) SWITCH		
	• Key off. • Locate and disconnect Inertia Fuel Shutoff (IFS) switch (verify that switch is reset). • Measure resistance between the C and NC pins of the IFS switch. (For Escort / Tracer and Probe, measure between GND pin and FP pin). • **Is resistance less than 5.0 ohms?** FP — METER PASSIVE C/U GND **ESCORT/TRACER, PROBE (IFS) SWITCH** A19588-D	Yes ▶ No ▶	RECONNECT IFS switch. REFER to fuel and engine sections (Electric Fuel Pump) for open in power-to-pump circuit, poor fuel pump ground, open in fuel pump, etc. REPLACE or RESET IFS switch. RERUN Quick Test.

Pinpoint Test J15

TEST STEP		RESULT ▶	ACTION TO TAKE
J20	DIAGNOSTIC TROUBLE CODE (DTC) 96/543: DOES ENGINE START		
	DTC 96/543 indicates a fuel pump secondary circuit failure between the B(+) supply and the FPM connection to the power-to-pump circuit. Possible causes: No Start: — Open circuit between the B(+) supply and the FPM connection to the power-to-pump circuit. — Fuel pump relay contacts always open. Engine Starts: — HO2S short to power (dual HO2S applications). — Damaged Powertrain Control Module (PCM). • **Does the engine start?**	Yes ▶ No ▶	**For dual HO2S applications:** GO to J25. **All others:** REPLACE PCM. RERUN Quick Test. GO to J21.

Pinpoint Test J20

TEST STEP		RESULT ▶	ACTION TO TAKE
J21	CHECK FOR B(+) TO FUEL PUMP RELAY		
	• Key off. • Disconnect fuel pump relay. • Measure voltage between B(+) circuit at the fuel pump relay vehicle harness connector and battery negative post. • **Is voltage greater than 10.5 volts?**	Yes ▶ No ▶	GO to J22. VERIFY integrity of fuse/fuse link for B(+) supply to fuel pump relay. If OK, SERVICE open in B(+) circuit. RECONNECT fuel pump relay. RERUN Quick Test.

Pinpoint Test J21

TEST STEP		RESULT ▶	ACTION TO TAKE
J22	CHECK POWER-TO-PUMP CIRCUIT CONTINUITY		
	• Key off. • Fuel pump relay disconnected. • Measure resistance between power-to-pump circuit at the fuel pump relay vehicle harness connector and the battery negative post. • **Is resistance less than 10.0 ohms?**	Yes ▶ No ▶	REPLACE fuel pump relay. RERUN Quick Test. SERVICE open in power-to-pump circuit between FPM splice and fuel pump relay. REFER to schematic. RECONNECT fuel pump relay. RERUN Quick Test.

Pinpoint Test J22

TEST STEP		RESULT ▶	ACTION TO TAKE
J25	CHECK LEFT/FRONT HEATED OXYGEN SENSOR (HO2S) FOR SHORT TO POWER		
	NOTE: **Due to the internal circuitry of the PCM, a left/front HO2S signal short to power could produce a DTC 95/542 or 96/543.** ● Key off. ● Disconnect left or front HO2S sensor. ● Measure resistance between HO2S signal pin and KEY POWER pin at the HO2S sensor connector. ● **Is resistance greater than 10,000 ohms?** 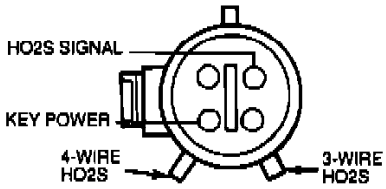 	Yes No	▶ GO to J26. ▶ REPLACE HO2S. RERUN Quick Test. CLEAR Keep Alive Memory

Pinpoint Test J25

TEST STEP		RESULT ▶	ACTION TO TAKE
J26	CHECK HO2S CIRCUIT FOR SHORT TO POWER		
	● Key off. ● Left or front HO2S disconnected. ● Disconnect Powertrain Control Module (PCM). Inspect for damaged or pushed out pins, corrosion, loose wires, etc. Service as necessary. Leave PCM disconnected. ● Key on. ● Measure voltage between the HO2S signal at the HO2S vehicle harness connector and chassis ground. ● **Is voltage less than 2.0 volts?** 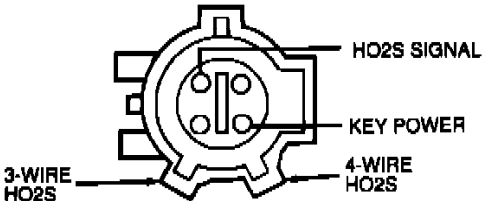 	Yes No	▶ REPLACE PCM. RECONNECT HO2S. RERUN Quick Test. ▶ SERVICE short circuit. RECONNECT PCM and HO2S. RERUN Quick Test. CLEAR Keep Alive Memory

Pinpoint Test J26

	TEST STEP	RESULT ▶	ACTION TO TAKE
J90	CONTINUOUS MEMORY DIAGNOSTIC TROUBLE CODE (DTC) 95/542: CHECK EEC-IV HARNESS		
	A Continuous Memory DTC 95/542 indicates that one of the following intermittent conditions has occurred: — Fuel pump circuit activated when PCM expected circuit to be off (i.e. fuel system test or prime procedure). — Inertia fuel shutoff switch reset (if in power-to-pump circuit). — Open circuit in or between the fuel pump and FPM circuit at the PCM (refer to schematic). — Poor fuel pump ground. — FPM or power-to-pump circuit short to power. — Fuel pump relay contacts stuck closed. — Left/Front HO2S circuit short to power (with/dual HO2S). — Engine stall due to excessive load. NOTE: For trucks with dual fuel tanks, perform Key On Engine Off (KOEO) Self-Test twice, once with the front tank selected and once with the rear tank selected. If KOEO DTC 11/111 and Continuous DTC 95/542 is present both times, continue with this test (Intermittent concern). If KOEO DTC 543 is present in only one test, refer to the **Fuel and Engine Sections** to check for open circuit between select switch and suspect pump circuit ground. ● Start engine. ● Check for engine stall/stumble while performing the following (also, if possible, listen for fuel pump turning off). — Shake, wiggle, bend the power-to-pump circuit between the power-to-pump pin at the fuel pump relay and the fuel pump. — Shake, wiggle, bend the fuel pump ground circuit from the fuel pump to ground. — Lightly tap the fuel pump to simulate road shock. — For vehicles with the Inertia Fuel Shutoff switch in the power-to-pump circuit (refer to schematic), lightly tap Inertia Fuel Shutoff switch to simulate road shock. ● Key off. ● Inspect the fuel pump vehicle harness connector and the fuel pump ground for corrosion, damaged pins, etc. ● **Is fault indicated/found?**	Yes ▶ No ▶	ISOLATE fault and SERVICE as necessary. CLEAR Continuous Memory DTC. RERUN Quick Test. GO to J91.

Pinpoint Test J90

TEST STEP		RESULT ▶	ACTION TO TAKE
J91	CHECK FPM CIRCUIT		
	• Key off. • Disconnect processor 60 pin connector. Inspect for damaged or pushed out pins, corrosion, loose wires, etc. Service as necessary. • Install breakout box, leave processor disconnected.	Yes ▶	ISOLATE fault and SERVICE as necessary. REMOVE breakout box. CLEAR Continuous Memory. RERUN Quick Test.
	• Key on, engine off. • Connect a test lamp between Test Pin 8 (Test Pin 19 for Escort/Tracer, and Mustang) and Test Pin 37 at the breakout box. • Observe test lamp for an indication of a fault while performing the following (The light will go out when a fault is found, indicating an open): — Shake, wiggle, bend the fuel pump monitor circuit between the fuel pump relay (or splice if applicable, refer to schematic) and the processor. • **Is fault indicated?**	No ▶	GO to J92.

Pinpoint Test J91

TEST STEP		RESULT ▶	ACTION TO TAKE
J92	CHECK FOR SHORTS TO POWER		
	• Key on, engine off. • Breakout box installed, processor disconnected. • Connect a TEST LAMP between Test Pin 8 (Test Pin 19 for Escort/Tracer, and Mustang) and Test Pin 40. • Observe test lamp for an indication of a fault while performing the following (The light will turn on when a fault is detected, indicating a short to power. Also, if possible, listen for fuel pump turning on.): — Shake, wiggle, bend the fuel pump monitor circuit and Power-To-Pump circuit, especially where they may be in the vicinity of a power circuit. • Lightly tap the fuel pump relay (to simulate road shock). • **Is fault indicated?**	Yes ▶	ISOLATE fault and SERVICE as necessary. REMOVE breakout box. RECONNECT processor. CLEAR Continuous Memory RERUN Quick Test.
		No ▶	**For dual HEGO applications:** GO to J96. **All others:** For further diagnosis using the EEC-IV monitor box, GO to INTERMITTENT FAULT DIAGNOSIS. If an EEC-IV monitor box is not available, GO to J99.

Pinpoint Test J92

TEST STEP		RESULT ▶	ACTION TO TAKE
J93	CONTINUOUS MEMORY CODE 96/543: CHECK FOR CONTINUOUS MEMORY CODE 87/556		
	• **Is Continuous Memory Code 87 or 556 also present?**	Yes ▶	GO to J95.
		No ▶	GO to J94.

Pinpoint Test J93

TEST STEP		RESULT	ACTION TO TAKE
J94	CHECK EEC-IV HARNESS		
	A Continuous Memory Code 96/543, without the presence of a Continuous Memory Code 87/556, indicates that during vehicle operation, one of the following has occurred: — Open in the BATT(+) circuit between BATT(+) and the fuel pump relay. — Fuel pump relay contacts opened. — Open in the Power-To-Pump circuit from the fuel pump relay to the FPM splice, if applicable (refer to schematic). — Left/Front HEGO circuit short to power (dual HEGO). ● Start engine. ● Check for engine stall/stumble while performing the following (also, if possible, listen for fuel pump turning off): — Shake, wiggle, bend the BATT(+) circuit from BATT(+) to the fuel pump relay. — Lightly tap the fuel pump relay (to simulate road shock). — Shake, wiggle, bend the Power-To-Pump circuit from the fuel pump relay to the FPM splice, if applicable (refer to schematic). ● Key off. ● Inspect the fuel pump relay connectors and BATT(+) connector terminal for corrosion, damaged pins, etc. ● **Is fault indicated/found?**	Yes No	ISOLATE fault and SERVICE as necessary. CLEAR Continuous Memory. RERUN Quick Test. Under certain conditions, a Continuous Memory Code 96/543 may have been set without a Continuous Memory Code 87/556, even though a fault has occurred in the fuel pump primary circuit. GO to J95 to check the fuel pump primary circuit.

Pinpoint Test J94

TEST STEP		RESULT	ACTION TO TAKE
J95	CONTINUOUS MEMORY CODE 87/556: CHECK EEC-IV HARNESS		
	A Continuous Memory Code 87/556 indicates that a fuel pump primary circuit failure has occurred during vehicle operation. Possible causes are: — Open in VPWR circuit between the EEC power relay and the fuel pump relay. — Open coil in fuel pump relay. — Open in fuel pump circuit (Pin 22). — Damaged inertia switch. ● Start engine. ● Check for engine stall/stumble while performing the following (also, if possible, listen for fuel pump turning off): — Shake, wiggle, bend the VPWR circuit between the EEC power relay and the fuel pump relay. For vehicles with the inertia switch in the VPWR circuit (refer to schematic), lightly tap the inertia switch to simulate road shock. — Shake, wiggle, bend the EEC-IV vehicle harness fuel pump circuit (Test Pin 22) between the processor and the fuel pui relay. — Lightly tap the fuel pump relay to simulate road shock. ● Key off. ● Inspect the processor 60 pin connector and the fuel pump relay connectors for corrosion, damaged pins, etc. ● **Is fault indicated/found?**	Yes No	ISOLATE fault and SERVICE as necessary. CLEAR Continuous Memory RERUN Quick Test. **For dual HEGO applications with a code 96/543 only:** GO to J96. **ALL others:** For further diagnosis using the EEC-IV monitor box GO to INTERMITTENT FAULT DIAGNOSIS If an EEC-IV monitor box is not available, GO to J99.

Pinpoint Test J95

TEST STEP		RESULT ▶	ACTION TO TAKE
J96	CHECK LEFT/FRONT HEGO CIRCUIT FOR SHORT TO POWER		
	NOTE: **Due to the internal circuitry of the processor, an intermittent left/front HEGO signal short to power could produce a Continuous Memory Service Code 95/542 or 96/543.** ● Key off. ● Install breakout box, if applicable. ● Breakout box installed, processor disconnected. ● Connect a test lamp between the left/front HEGO test pin and test pin 40 at the breakout box. ● Observe test lamp for an indication of a fault while performing the following (the light will turn on bright when a fault is detected): — Shake, wiggle, bend the left/front HEGO circuit from the HEGO sensor to the processor. — Lightly tap the HEGO sensor (to simulate road shock). ● **Is fault indicated?**	Yes ▶ No ▶	ISOLATE fault and SERVICE as necessary. REMOVE breakout box. RECONNECT processor. CLEAR Keep Alive Memory. RERUN Quick Test. For further diagnosis using the EEC-IV monitor box, Go to INTERMITTENT FAULT DIAGNOSIS. If an EEC-IV monitor box is not available, GO to J99.

Pinpoint Test J96

J99 - Road Test

The purpose of the road test is to identify an area of concern by monitoring certain controlled parameters while trying to re-create a driveability or MIL symptom.

NOTE: A basic working knowledge of the EEC-IV system is critical to effectively analyze road test data.

WARNING: THIS ROAD TEST IS A SUGGESTED BUT OPTIONAL PROCEDURE. ALL APPLICABLE SAFETY PROCEDURES AND TRAFFIC LAWS MUST BE FOLLOWED. IN ORDER FOR A ROAD TEST TO BE PERFORMED IT IS REQUIRED THAT ANOTHER PERSON ACCOMPANY THE DRIVER. THE ACCOMPANYING PERSON CAN MAKE MEASUREMENTS, OBSERVE CHANGES AND RECORD NOTES. IF FOR SOME REASON THIS TEST IS NOT PERFORMED, RETURN TO DIAGNOSTIC ROUTINES FOR OTHER POSSIBLE CAUSES.

- Prepare vehicle for a road test
  - Install breakout box, if applicable.
  - Breakout box installed, processor connected.
  - Install fuel pressure gauge and MAP/BARO tester (optional).
  - Other materials needed; DVOM, pencil, paper, appropriate schematic/pin usage sheet
- Preliminary power/ground checks
  - With the key ON and a DVOM referenced to the battery negative post, check the following signals for correct values.

    POWERS: KAPWR >10.5V (Pin 1), VPWR > 10.5V (Pins 37/57), VREF 5 ± 1V (Pin 26).

    GROUNDS: (all = 0 ± .5V) PWR GND (Pins 40/60), SIG RTN (Pin 46), IGN GND (Pin 16).

    OPTIONAL GROUNDSHEGO GND (Pin 49), CSE GND (Pin 20), MAF RTN (Pin 9 or 15)
- Obtaining other needed information and materials before the road test
  - Refer to the Diagnosis by Symptom Charts looking at the chart(s) that most resembles the vehicle's driveability or MIL light symptom. Before the road test perform the Visual/Mechanical Checks that are listed. Next, list the EEC-IV sensors and actuators in the order given. These circuits, along with the FP/FPM signal(s), are the main signals that will be monitored.
  - Refer to the proper Diagnostic Reference Value Sheet. Although these charts were designed for use with the EEC-IV monitor box, most of the values can be read using the breakout box and a DVOM (with the DVOM referenced to ground all values in DCV units can be used; other values may also be helpful. ex., MAP Hz using the MAP/BARO tester).

- The use of test lamp(s) and a DVOM may also aid diagnosis. For example, with a Continuous Memory 87/556 (fuel pump primary circuit failure) and a surge/stall symptom, a test lamp could be connected at the fuel pump relay between the VPWR circuit and ground, with a DVOM connected between the Fuel Pump (FP) circuit at the relay and Test Pin 1 (KAPWR) at the breakout box. Under normal drive conditions the lamp will be on and the DVOM will read battery voltage (if the vehicle stalls, the processor will "unground" the FP circuit and the DVOM voltage will be low. If the problem is in the fuel pump wiring the lamp/voltage should change just before the symptom occurs). If the VPWR lamp goes out, the problem is in the VPWR supply to the relay. If the lamp stayed on, the DVOM voltage remained high and a Continuous Memory 87/556 was set again, REPLACE the fuel pump relay. If only the FP voltage went low, the problem is either in the FP circuit or the processor. The DVOM could now be connected between Test Pin 22 (FP) and Test Pin 1 (KAPWR) at the breakout box. If, just before the symptom occurs, the voltage goes low, REPLACE the processor; if the voltage stays high, the problem is in the FP circuit wiring. For the fuel pump secondary circuit codes (95/542, 96/543), the BATT(+), Power-to-Pump and FPM circuits could be similarly monitored.

NOTE: Due to the low resistance of some test lamps, it is recommended that a DVOM or equivalent high resistance testing device be used when monitoring processor output circuits.

Road Test

- After starting the engine for the road test, enter Engine Running Continuous Memory mode.
- Drive the vehicle to create the conditions so that the symptom will occur. If the Customer Information Worksheet has been completed, this information may help when trying to re-create the symptom.
- When the symptom occurs, the accompanying passenger should observe changes in listed EEC-IV signals. Information about the symptom, operating condition value of the EEC-IV signal or other notes should be recorded onto paper.
- If you are unable to duplicate the symptom, it may still be helpful to verify that the EEC-IV values are in the expected range.

Analyzing The Data

- Once the road test is completed, the results need to be analyzed to locate and service the exact fault which caused the symptom.
- If no problem is identified, return to Diagnostic Routines for other possible causes of the symptom.

KA - Testing Notes

NOTE: You should enter this Pinpoint Test only when you have been directed here from Quick Test.

REMEMBER

To prevent the replacement of good components, be aware that the following non-EEC areas may be at fault.

- Damaged vacuum hoses
- Back Pressure Transducer
- EGR valve

This Pinpoint Test is intended to diagnose only the following:

- EGR Vacuum Regulator **(EVR)** solenoid
- Harness circuits: EVR, and VPWR
- Processor assembly

DESCRIPTION

The EGR Vacuum Regulator **(EVR)** solenoid regulates the vacuum supply to the EGR valve via the Back Pressure Transducer **(BPT)**. If the EVR solenoid is energized, the solenoid valve opens a path for the manifold vacuum to be applied to the EGR valve. If the EVR solenoid is not energized, then the solenoid valve closes the vacuum path to the EGR valve and vacuum is vented to the atmosphere.

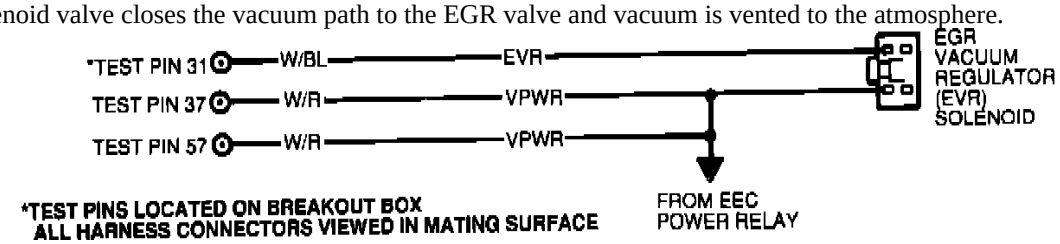

EGR Vacuum Regulator Solenoid

TEST STEP		RESULT ▶	ACTION TO TAKE
KA1	KOEO SERVICE CODE 558: ENTER OUTPUT STATE CHECK		
	Service Code 558 indicates a failure in the EVR solenoid circuit. Possible causes: — Damaged EVR solenoid. — Damaged vacuum hose(s). — Open in harness. — Short in harness. — Damaged processor. NOTE: **Do not use STAR Tester for this step. Use a VOM/DVOM.** ● Key off. ● Disconnect electrical connector on the speed control servo, if equipped. ● DVOM on 20 volt scale. ● Connect DVOM negative test lead to STO circuit at Self-Test connector and positive test lead to battery positive. ● Jumper STI circuit to SIG RTN at the Self-Test connector. ● Perform Key On Engine Off Self-Test until the completion of the Continuous Test codes. ● DVOM will indicate less than 1.0 volt when test is completed. ● Depress and release the throttle. ● **Does voltage increase?**	Yes ▶ No ▶	REMAIN in Output State Check. GO to KA2. DEPRESS throttle to WOT and release. If STO voltage does not go high leave equipment hooked up and GO to QC1.

Pinpoint Test KA1

TEST STEP		RESULT ▶	ACTION TO TAKE
KA2	CHECK EVR SOLENOID ELECTRICAL OPERATION		
	● Key on, engine off. ● Disconnect EVR solenoid. ● Connect DVOM positive test lead to VPWR pin and negative test lead to EVR circuit at the EVR solenoid vehicle harness connector. ● DVOM at 20 volt scale. ● While observing DVOM, depress and release the throttle several times to cycle the solenoid output. ● **Does the EVR solenoid output voltage change greater than 0.5 volts?**	Yes ▶ No ▶	GO to KA3. REMOVE jumper. GO to KA6.

Pinpoint Test KA2

TEST STEP		RESULT ▶	ACTION TO TAKE
KA3	CHECK EVR SOLENOID VALVE OPERATION		
	• Key on, engine off. • Disconnect both source port and output port vacuum hoses at the EVR solenoid. • Install a vacuum pump at the source port and a vacuum gauge at the output port of the EVR solenoid. • Maintain a minimum vacuum of 20.2 kPa (6 in-Hg) at the solenoid source port. • Cycle the solenoid state by depressing and releasing the throttle several times. • Key off. • **Does the vacuum gauge needle show that the vacuum at the output port cycles?**	Yes ▶ No ▶	REMOVE jumper wire. REMOVE vacuum pump and vacuum gauge. RECONNECT output port vacuum hose. GO to KA4. REMOVE jumper wire. REPLACE vacuum pump and vacuum gauge. REPLACE EVR solenoid. RERUN Quick Test.

Pinpoint Test KA3

TEST STEP		RESULT ▶	ACTION TO TAKE
KA4	CHECK VACUUM HOSE FROM THE EVR SOLENOID SOURCE PORT TO THE THROTTLE BODY		
	• Key off. • Source port vacuum hose between EVR solenoid and throttle body disconnected. • Plug one end of the hose and install a vacuum / pressure pump at the other end. • Apply and maintain a steady pressure through the hose, while observing the pump gauge needle. • **Does the pump gauge needle show a pressure drop?**	Yes ▶ No ▶	REMOVE vacuum pump and hose plug. REPLACE vacuum hose. RERUN Quick Test. Remove vacuum pump and vacuum gauge. RECONNECT vacuum hose. GO to KA5.

Pinpoint Test KA4

TEST STEP		RESULT ▶	ACTION TO TAKE
KA5	CHECK VACUUM HOSE FROM EVR SOLENOID TO BACK PRESSURE TRANSDUCER (BPT)		
	• Key off. • Disconnect vacuum hose between EVR solenoid and Back Pressure Transducer (BPT). • Plug one end of the hose and install a vacuum / pressure pump at the other end. • Apply and maintain a steady pressure through the hose while observing pump gauge needle. • **Does the pump gauge needle show a pressure drop?**	Yes ▶ No ▶	REMOVE vacuum pump and hose plug. REPLACE vacuum hose. RERUN Quick Test. REMOVE vacuum pump and hose. REFER to EMISSIONS SECTION and check the BPT to EGR valve vacuum path.

Pinpoint Test KA5

TEST STEP		RESULT ▶	ACTION TO TAKE
KA6	CHECK EVR SOLENOID VPWR		
	• Key off. • EVR solenoid disconnected. • Key on, engine off. • Measure voltage between VPWR at the EVR solenoid vehicle harness connector and battery ground. • **Is voltage greater than 10.5 volts?**	Yes ▶ No ▶	GO to KA7. SERVICE open in VPWR harness circuit. RECONNECT EVR solenoid. RERUN Quick Test.

Pinpoint Test KA6

TEST STEP		RESULT ▶	ACTION TO TAKE
KA7	CHECK CONTINUITY OF EVR SOLENOID SIGNAL HARNESS CIRCUIT		
	• Key off. • EVR solenoid disconnected. • Disconnect processor 60-pin connector. Inspect for damaged or pushed out pins, corrosion, loose wires, etc. Service as necessary. • Install breakout box, leave processor disconnected. • Measure resistance between Test Pin 31 at breakout box and EVR circuit at EVR solenoid vehicle harness connector. • **Is resistance less than 5.0 ohms?**	Yes ▶ No ▶	GO to KA8. SERVICE open circuit. REMOVE breakout box. RECONNECT all components. RERUN Quick Test.

Pinpoint Test KA7

TEST STEP		RESULT ▶	ACTION TO TAKE
KA8	CHECK EVR SOLENOID SIGNAL HARNESS CIRCUIT FOR SHORT TO POWER AND GROUND		
	• Key off. • EVR solenoid disconnected. • Breakout box installed, processor disconnected. • Measure resistance between Test Pin 31 and Test Pins 37 and 57 at breakout box. • Measure resistance between Test Pin 31 and Test Pins 40, 46 and 60 at breakout box. • **Is each resistance greater than 10,000 ohms?**	Yes ▶ No ▶	REPLACE processor. REMOVE breakout box. RECONNECT all components. RERUN Quick Test. SERVICE short circuit. REMOVE breakout box. RECONNECT all components. RERUN Quick Test.

Pinpoint Test KA8

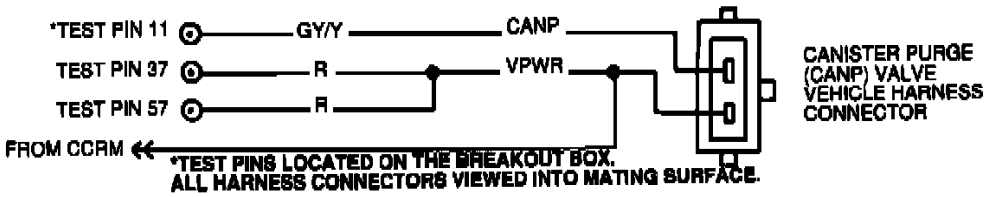

Schematic Diagram

KB - Testing Notes

NOTE: You should enter this Pinpoint Test only when you have been directed here from Diagnostic Routines.

REMEMBER

This Pinpoint Test is intended to diagnose only the following:

- Canister Purge **(CANP)** valve (90915)
- Harness circuits: CANP and VPWR
- Powertrain Control Module **(PCM)** (12A650)

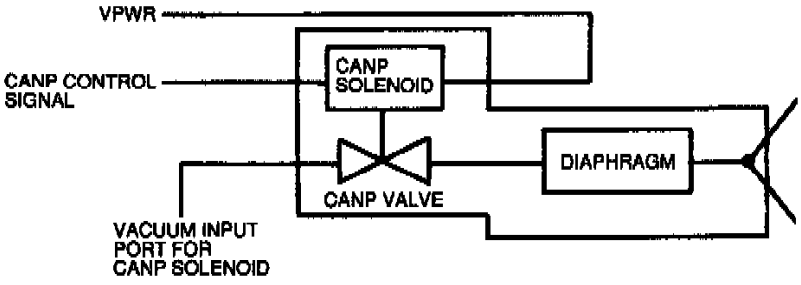

CANISTER PURGE (CANP) VALVE ASSEMBLY

Schematic Diagram

DESCRIPTION

The CANP valve is a part solenoid, part valve output component that is used by the PCM to regulate the flow of fuel vapors from the EVAP canister to the fuel system. The CANP valve regulates the flow as a function of manifold vacuum and duty cycle signal from the PCM, which controls the CANP valve solenoid.

	TEST STEP	RESULT ▶	ACTION TO TAKE
KB1	DIAGNOSTIC TROUBLE CODE (DTC) 565: ENTER OUTPUT STATE DIAGNOSTIC TEST MODE (DTM)		
	NOTE: Do not use STAR tester for this step, use a VOM/DVOM. DTC 565 indicates CANP valve failure has been detected. Possible causes: — Damaged CANP valve. — Damaged vacuum hose to CANP valve from manifold. — Open in VPWR harness circuit. — Open in solenoid control signal circuit. — Short to power in solenoid control signal circuit. — Short to ground in solenoid control signal circuit. — Damaged Powertrain Control Module (PCM). • Key off. • Disconnect electrical connector on the speed control servo, if equipped. • VOM/DVOM on 20 volt scale. • Connect VOM/DVOM negative test lead to STO circuit at the Data Link Connector (DLC) and positive test lead to B+. • Jumper STI circuit to SIG RTN at the DLC. • Perform Key On Engine Off Self-Test until the completion of the Continuous Memory DTC output. • VOM/DVOM will indicate less than 1.0 volt when test is completed. • Depress and release the throttle. • **Does the voltage increase?**	Yes No	REMAIN in Output State DTM. GO to KB2. DEPRESS throttle to WOT and release. If STO voltage does not go high then leave equipment hooked up and PERFORM Pinpoint Test Step QC1.

Pinpoint Test KB1

	TEST STEP	RESULT ▶	ACTION TO TAKE
KB2	CHECK CANP VALVE ELECTRICAL OPERATION		
	• Key on, engine off. • Disconnect CANP valve. • Connect VOM/DVOM positive test lead to VPWR circuit and negative test lead to CANP circuit at the CANP valve vehicle harness connector. • DVOM on 20 volt scale. • While observing VOM/DVOM depress and release the throttle several times to cycle output. • **Does CANP circuit cycle 0.5 volt or greater?**	Yes No	REMAIN in Output State DTM. GO to KB3. REMOVE jumper. GO to KB7.

Pinpoint Test KB2

TEST STEP	RESULT ▶	ACTION TO TAKE
KB3 CHECK CANP VALVE RESISTANCE		
• Key on, engine off. • CANP valve disconnected. • Measure CANP valve resistance. • **Is resistance between 30 and 36 ohms?**	Yes ▶ No ▶	REMAIN in Output State DTM. GO to KB4. REPLACE CANP valve assembly. REMOVE jumper wire. RERUN Quick Test.

Pinpoint Test KB3

TEST STEP	RESULT ▶	ACTION TO TAKE
KB4 CHECK CANP VALVE FOR VACUUM LEAKS		
• Key on, engine off. • CANP valve disconnected. • Disconnect vacuum hose at input port of CANP valve (Refer to illustration.) • Apply 16 in-Hg of vacuum to CANP valve input port. • **Does CANP valve hold vacuum for 20 seconds?** 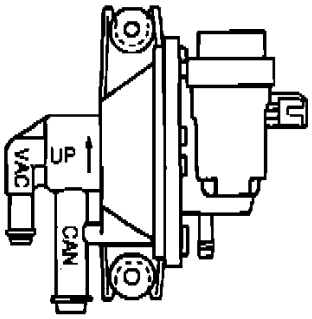 A16333-A	Yes ▶ No ▶	REMAIN in Output State DTM. GO to KB5. REPLACE CANP valve assembly. REMOVE jumper wire. RERUN Quick Test.

Pinpoint Test KB4

TEST STEP	RESULT ▶	ACTION TO TAKE
KB5 CHECK CANP VALVE ELECTRO-MECHANICAL OPERATION		
• Still in Output State DTM, reconnect the CANP valve. • Vacuum (16 in-Hg) applied to CANP solenoid input port. • Depress and release throttle. • **Is vacuum released?**	Yes ▶ No ▶	REMOVE jumper wire. REMOVE vacuum pump. GO to KB6. REMOVE jumper wire. REPLACE CANP valve assembly. RERUN Quick Test.

Pinpoint Test KB5

TEST STEP		RESULT ▶	ACTION TO TAKE
KB6	CHECK FOR VACUUM TO CANP VALVE INPUT PORT		
	• Key on, engine running. • CANP valve connected. • Place finger on vacuum hose end that attaches to the input port of the CANP valve. • **Is vacuum present at vacuum hose end?**	Yes ▶	RECONNECT CANP input port vacuum hose. EEC system is OK. REFER to emission control systems.
		No ▶	CHECK CANP valve input port vacuum hose for proper routing, kinks, leaks or blockage. If OK, REFER to engine mechanical for items that may affect engine vacuum.

Pinpoint Test KB6

TEST STEP		RESULT ▶	ACTION TO TAKE
KB7	CHECK VPWR CIRCUIT VOLTAGE		
	• Key on, engine off. • CANP valve disconnected. • Measure voltage between VPWR at the CANP valve vehicle harness connector and battery ground. • **Is voltage greater than 10.5 volts?**	Yes ▶ No ▶	GO to KB8. SERVICE open in harness. RECONNECT CANP valve. RERUN Quick Test.

Pinpoint Test KB7

TEST STEP		RESULT ▶	ACTION TO TAKE
KB8	CHECK CONTINUITY OF CANP CIRCUIT		
	• Key off. • CANP valve disconnected. • Disconnect Powertrain Control Module (PCM). Inspect for damaged or pushed out pins, corrosion, loose wires, etc. Service as necessary. • Install breakout box, leave PCM disconnected. • Measure resistance between CANP circuit at the CANP valve vehicle harness connector and Test Pin 11 at the breakout box. • **Is resistance less than 5.0 ohms?**	Yes ▶ No ▶	GO to KB9. SERVICE open in harness. REMOVE breakout box. RECONNECT all components. RERUN Quick Test.

Pinpoint Test KB8

TEST STEP		RESULT ▶	ACTION TO TAKE
KB9	CHECK CANP CIRCUIT FOR SHORT TO POWER		
	• Key off. • CANP valve disconnected. • Breakout box installed, PCM disconnected. • Measure resistance between Test Pin 11 and Test Pins 37 and 57 at the breakout box. • **Is each resistance greater than 10,000 ohms?**	Yes ▶ No ▶	GO to KB10. SERVICE short in harness. REMOVE breakout box. RECONNECT all components. RERUN Quick Test.

Pinpoint Test KB9

TEST STEP		RESULT ▶	ACTION TO TAKE
KB10	CHECK CANP CIRCUIT FOR SHORT TO GROUND		
	• Key off. • CANP valve disconnected. • Breakout box installed, PCM disconnected. • Measure resistance between Test Pin 11 and Test Pins 40, 46 and 60 at the breakout box. • **Is each resistance greater than 10,000 ohms?**	Yes ▶ No ▶	REPLACE the PCM. REMOVE breakout box. RECONNECT all components. RERUN Quick Test. SERVICE short in harness. REMOVE breakout box. RECONNECT all components. RERUN Quick Test.

Pinpoint Test KB10

KD - Testing Notes

NOTE: You should enter this Pinpoint Test only when you have been directed here from Quick Test.

REMEMBER

This Pinpoint Test is intended to diagnose only the following:

- CANP solenoids

- Harness circuits: CANP and VPWR

- Processor assembly

DESCRIPTION

The Canister Purge **(CANP)** Solenoid is an output control which allows venting of the evaporative purge carbon canister back into the fuel (intake) system. This output maybe an on/off or constant frequency/varying duty cycle type control.

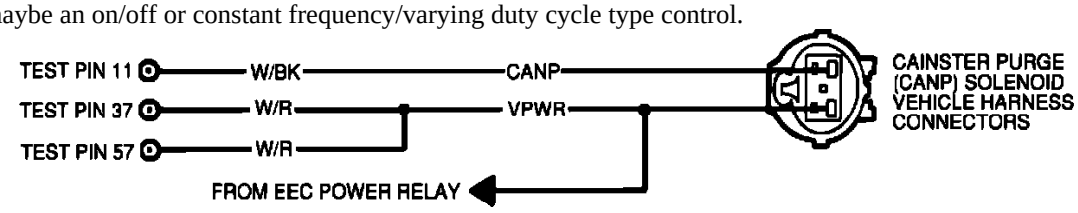

Cannister Purge

TEST STEP		RESULT ▶	ACTION TO TAKE
KD1	ENTER OUTPUT STATE CHECK		
	NOTE: **Do not use STAR tester for this step, use VOM/DVOM.** • Key off. • Disconnect electrical connector on the speed control servo, if equipped. • DVOM on 20 volt scale. • Connect DVOM negative test lead to STO circuit at Self-Test connector and positive test lead to battery positive. • Jumper STI circuit to SIG RTN at the Self-Test connector. • Perform Key On Engine Off Self-Test until the completion of the Continuous Test Codes. • DVOM will indicate less than 1.0 volt when test is completed. • Depress and release the throttle. • **Does voltage increase?**	Yes ▶ No ▶	REMAIN in Output State Check. GO to KD2. DEPRESS throttle to WOT and release. If STO voltage does not go high, leave equipment hooked up and PERFORM Pinpoint Test Step QC1.

Pinpoint Test KD1

TEST STEP		RESULT ▶	ACTION TO TAKE
KD2	CHECK CANP SOLENOID ELECTRICAL OPERATION		
	• Key on, engine off. • Disconnect CANP solenoid (on 7.0L MFI do one at a time). • Connect DVOM positive test lead to VPWR circuit and negative test lead to CANP circuit at the CANP solenoid vehicle harness connector. • DVOM on 20 volt scale. • While observing DVOM depress and release the throttle several times to cycle output. • **Does CANP circuit cycle 0.5 volt or greater?**	Yes ▶ No ▶	REMAIN in Output State DTM. GO to KD3. REMOVE jumper. GO to KD7.

Pinpoint Test KD2

TEST STEP		RESULT ▶	ACTION TO TAKE
KD3	CHECK CANP SOLENOID FOR VACUUM LEAKS		
	• Key on, engine off. • CANP solenoid disconnected. • Disconnect vacuum hose at CANP solenoid on manifold vacuum side of CANP solenoid. • Apply 16 in-Hg (53 kPa) of vacuum to manifold vacuum side of CANP solenoid. • **Does CANP solenoid hold vacuum for 20 seconds?**	Yes ▶ No ▶	REMAIN in Output State Check. Leave vacuum pump setup in place. GO to KD4. REPLACE CANP solenoid. RERUN Quick Test. If symptom is still present, REFER to EMISSIONS. Evaporative Emission System Diagnosis.

Pinpoint Test KD3

TEST STEP		RESULT ▶	ACTION TO TAKE
KD4	CHECK CANP SOLENOID FOR MECHANICAL OPERATION		
	• While remaining in output state check, reconnect CANP solenoid. • Apply 16 in-Hg (53 kPa) of vacuum to manifold vacuum side of CANP solenoid. • Depress and release throttle. • **Is vacuum released?**	Yes ▶ No ▶	CHECK hose from CANP solenoid to canister for cracks, leaks, etc. If OK, REMOVE jumper from STI to SIGNAL RETURN. GO to KD5. CHECK hose from CANP solenoid to canister for blockage or kinks. If OK, REPLACE CANP solenoid. RERUN Quick Test.

Pinpoint Test KD4

TEST STEP		RESULT ▶	ACTION TO TAKE
KD5	CHECK FOR VACUUM TO CANP SOLENOID		
	• Disconnect vacuum hose at CANP solenoid at manifold vacuum side. • Start engine. • **Is vacuum present at engine vacuum hose?**	Yes ▶ No ▶	EEC-IV system OK. If a symptom is still present, REFER to EMISSIONS for Evaporative Emission Systems Diagnosis. CHECK vacuum line for proper routing, kinks, leaks or blockage. If OK, REFER to Engine Mechanical for probable subjects affecting engine vacuum

Pinpoint Test KD5

TEST STEP		RESULT ▶	ACTION TO TAKE
KD6	SERVICE CODE 85/565 OR 569: CHECK CANP SOLENOID RESISTANCE		
	Service Code 85/565 or 569 indicates a failure in the CANP solenoid circuit. With Dual CANP system: Code 565 refers to CANP 1, Code 569 refers to CANP 2. Possible causes are: — Damaged CANP solenoid — Open harness — Shorted (Power or Ground) harness — Damaged processor. • Key off. • Disconnect appropriate CANP solenoid. • Measure CANP solenoid resistance. • **Is resistance between 40 and 90 ohms?**	Yes ▶ No ▶	GO to KD7. REPLACE CANP solenoid. RERUN Quick Test.

Pinpoint Test KD6

TEST STEP		RESULT ▶	ACTION TO TAKE
KD7	CHECK VPWR CIRCUIT VOLTAGE		
	• Key on, engine off. • Appropriate CANP solenoid disconnected. • Measure voltage between VPWR at the CANP solenoid vehicle harness connector and battery ground. • **Is voltage greater than 10.5 volts?**	Yes ▶ No ▶	GO to KD8. SERVICE open harness circuit. RECONNECT CANP solenoid. RERUN Quick Test.

Pinpoint Test KD7

TEST STEP		RESULT ▶	ACTION TO TAKE
KD8	CHECK CONTINUITY OF CANP CIRCUIT		
	• Key off. • Appropriate CANP solenoid disconnected. • Disconnect Powertrain Control Module (PCM). Inspect for damaged or pushed out pins, corrosion, loose wires, etc. Service as necessary. • Install breakout box, leave PCM disconnected. • Measure resistance between Test Pin 11, (15, 31 or Pin 54 refer to schematic) at the breakout box and CANP circuit at the CANP solenoid vehicle harness connector. • **Is resistance less than 5.0 ohms?**	Yes ▶ No ▶	GO to KD9. SERVICE open circuit. REMOVE breakout box. RECONNECT all components. RERUN Quick Test.

Pinpoint Test KD8

TEST STEP		RESULT ▶	ACTION TO TAKE
KD9	CHECK CANP CIRCUIT FOR SHORT TO GROUND		
	• Key off. • Appropriate CANP solenoid disconnected. • Breakout box installed, PCM disconnected. • Measure resistance between Test Pin 11 (15, 31 or Pin 54 refer to schematic) and Test Pins 40, 46 and 60 at the breakout box. • **Is each resistance greater than 10,000 ohms?**	Yes ▶ No ▶	GO to KD10. SERVICE short to ground. REMOVE breakout box. RECONNECT all components. RERUN Quick Test.

Pinpoint Test KD9

TEST STEP	RESULT ▶	ACTION TO TAKE
KD10 CHECK CANP CIRCUIT FOR SHORT TO POWER		
• Key off. • CANP solenoid disconnected. • Breakout box installed, PCM disconnected. • Measure resistance between Test Pin 11 (15, 31 or Pin 54 refer to schematic) and Test Pins 37 and 57 at the breakout box. • **Is each resistance greater than 10,000 ohms?**	Yes ▶ No ▶	REPLACE PCM. REMOVE breakout box. RECONNECT all components. RERUN Quick Test. SERVICE short to power. REMOVE breakout box. RECONNECT all components. RERUN Quick Test.

Pinpoint Test KD10

KE - Test Notes

NOTE: You should enter this Pinpoint Test only when you have been directed here from Quick Test or Pinpoint Test S.

REMEMBER

To prevent the replacement of good components, be aware that the following non-EEC areas may be at fault.

- Engine not up to operating temperature

- Engine over operating temperature

- A/C input (electrical problems)

- Throttle Speed Control Linkage

- Throttle sticking or linkage binding

This Pinpoint Test is intended to diagnose only the following:

- RPM in Self-Test only

- ISC Solenoid

- Harness circuits: ISC and VPWR

- Processor assembly

DESCRIPTION

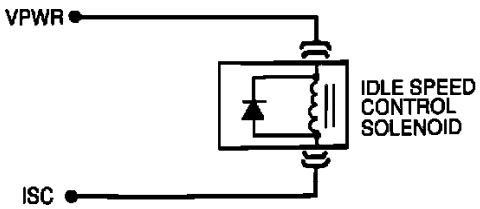

Idle Speed Control

The Idle Speed Control **(ISC)** solenoid is used to control engine idle speed and dashpot functions. The ISC solenoid is mounted on the body and allows air to bypass the throttle plate. The amount of air allowed to bypass is determined by the processor and controlled by a duty cycle signal. The ISC solenoid contains a Bypass Air **(BPA)** valve that consists of a thermowax material. The material expands or contracts depending on engine coolant temperature, resulting in extra air when the engine is cold.

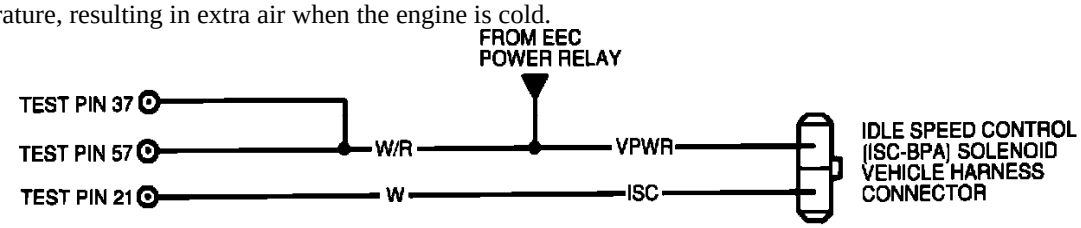

Idle Speed Control

TEST STEP		RESULT ▶	ACTION TO TAKE
KE1	SERVICE CODE 12/412, 16: CHECK FOR RPM DROP		
	Service Code 12/412 indicates that during Engine Running Self-Test, engine rpm could not be controlled within the Self-Test upper limit band. Service Code 16 indicates that during Engine Running Self-Test, engine rpm was too low to perform the HEGO test. Possible causes: — Open or shorted circuit — Throttle linkage binding — Improper idle airflow set — Throttle body/ISC solenoid contamination — Items external to Idle Speed Control system that could affect engine rpm. — Damaged ISC solenoid — Damaged processor • Key off. • Connect engine tachometer. • Start engine. • Disconnect ISC harness connector. • **Does rpm drop or stall?**	Yes ▶ No ▶	GO to KE2. GO to KE3.

Pinpoint Test KE1

TEST STEP		RESULT ▶	ACTION TO TAKE
KE2	CHECK FOR EGR CODES		
	• **Are Service Codes 31/327, 32/326/328, 33/332, 34/336/334 or 213 present?**	Yes ▶ No ▶	RECONNECT ISC solenoid. Refer to Trouble Code Index for appropriate test GO to KE3.

Pinpoint Test KE2

TEST STEP		RESULT ▶	ACTION TO TAKE
KE3	CHECK FOR OTHER EEC CODES		
	• **Are Service Codes 22/126, 41/172, 42/173, 91/136 or 92/137 present?**	Yes ▶ No ▶	RECONNECT ISC solenoid. GO to Trouble Code Charts for appropriate Pinpoint Test. GO to KE4.

Pinpoint Test KE3

TEST STEP		RESULT ▶	ACTION TO TAKE
KE4	MEASURE ISC SOLENOID RESISTANCE		
	• Key off. • ISC solenoid disconnected. • Measure solenoid resistance. NOTE: **Due to diode in solenoid, place DVOM(+) lead on VPWR pin and (-) lead on ISC pin.** • **Is resistance between 6.0 and 13.0 ohms?** 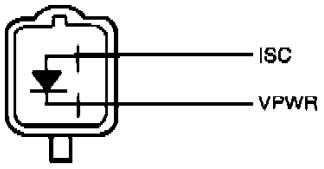 **ISC SOLENOID CONNECTOR**	Yes ▶ No ▶	GO to KE5. REPLACE ISC solenoid. RERUN Quick Test.

Pinpoint Test KE4

TEST STEP		RESULT ▶	ACTION TO TAKE
KE5	CHECK FOR INTERNAL SHORT TO ISC SOLENOID CASE		
	• Key off. • ISC solenoid disconnected. • Measure resistance from either ISC solenoid pin to ISC housing. • **Is resistance greater than 10,000 ohms?**	Yes ▶ No ▶	GO to KE6. REPLACE ISC solenoid. RERUN Quick Test.

Pinpoint Test KE5

TEST STEP		RESULT ▶	ACTION TO TAKE
KE6	CHECK VPWR CIRCUIT VOLTAGE		
	• Key on, engine off. • ISC solenoid disconnected. • Measure voltage between VPWR circuit at the ISC solenoid vehicle harness connector and battery ground. • **Is voltage greater than 10.5 volts?**	Yes ▶ No ▶	GO to KE7. SERVICE open circuit. RERUN Quick Test.

Pinpoint Test KE6

TEST STEP		RESULT ▶	ACTION TO TAKE
KE7	CHECK ISC CIRCUIT CONTINUITY		
	• Key off. • ISC solenoid disconnected. • Disconnect processor and inspect both 60 pin connectors for damaged or pushed out pins, corrosion, loose wires, etc. Service as necessary. • Install breakout box, leave processor disconnected. • Measure resistance between Test Pin 21 at the breakout box and ISC circuit at ISC solenoid vehicle harness connector. • **Is resistance less than 5.0 ohms?**	Yes ▶ No ▶	GO to KE8. SERVICE open circuit. REMOVE breakout box. RECONNECT all components. RERUN Quick Test.

Pinpoint Test KE7

TEST STEP		RESULT ▶	ACTION TO TAKE
KE8	CHECK ISC CIRCUIT FOR SHORT TO GROUND		
	• Key off. • Breakout box installed, processor disconnected. • ISC solenoid disconnected. • Measure resistance between Test Pin 21 and Test Pins 40, 46 and 60 at the breakout box. • **Is each resistance greater than 10,000 ohms?**	Yes ▶ No ▶	GO to KE9. SERVICE short circuit. REMOVE breakout box. RECONNECT all components. RERUN Quick Test.

Pinpoint Test KE8

TEST STEP		RESULT ▶	ACTION TO TAKE
KE9	CHECK ISC CIRCUIT FOR SHORT TO POWER		
	• Key off. • Breakout box installed, processor disconnected. • ISC solenoid disconnected. • Key on. • Measure voltage between Test Pin 21 at the breakout box and chassis ground. • **Is voltage less than 1.0 volt?**	Yes ▶ No ▶	GO to KE10. SERVICE short circuit. REMOVE breakout box. RECONNECT all components. RERUN Quick Test. If code or symptom is still present, REPLACE processor.

Pinpoint Test KE9

TEST STEP		RESULT ▶	ACTION TO TAKE
KE10	CHECK FOR ISC SIGNAL FROM THE PROCESSOR		
	• Key off. • Breakout box installed. • Reconnect processor to breakout box. • Reconnect ISC solenoid. • Connect DVOM between Test Pin 21 and Test Pin 40 at the breakout box. • Start engine. • Slowly increase rpm to 3000 rpm. • **Is voltage between 3.0 and 11.5 volts?**	Yes ▶ No ▶	GO to KE11. REMOVE ISC solenoid and VERIFY that it is not stuck open. If OK, REPLACE processor. REMOVE breakout box. RERUN Quick Test.

Pinpoint Test KE10

TEST STEP	RESULT ▶	ACTION TO TAKE
KE11 CHECK IDLE		
• **Does engine idle speed appear normal?**	Yes ▶	REMOVE ISC solenoid and INSPECT for contamination. If contamination is present, REFER to FUEL SYSTEM to determine if solenoid is a type that can be cleaned. **No contamination present or solenoid cannot be cleaned:** REPLACE ISC solenoid. RERUN Quick Test. **Solenoid is contaminated and can be cleaned:** CLEAN as necessary RERUN Quick Test. If code / symptom is still present, REPLACE ISC solenoid.
	No ▶	RESET idle airflow to specification. REFER to FUEL SYSTEM for idle airflow adjust procedure. If UNABLE to RESET idle to specification, GO to **KE12**.

Pinpoint Test KE11

TEST STEP	RESULT ▶	ACTION TO TAKE
KE12 CHECK FOR PROBLEMS AFFECTING PROPER ENGINE SPEED		
• Check throttle linkage and / or speed control linkage for binding. • Inspect throttle body for contamination. • Check engine vacuum hoses. Refer to VECI decal. • Check for leaks around ISC solenoid (i.e. mounting gasket, etc.). • **Are all the above checks OK?**	Yes ▶	REMOVE ISC solenoid and INSPECT for contamination. If contamination is present, REFER to FUEL SYSTEM to determine if solenoid is a type that can be cleaned. **No contamination present or solenoid cannot be cleaned:** REPLACE ISC solenoid. RERUN Quick Test. **Solenoid is contaminated and can be cleaned:** CLEAN as necessary RERUN Quick Test. If code / symptom is still present, REPLACE ISC solenoid.
	No ▶	SERVICE as necessary. REMOVE breakout box. RECONNECT processor. RERUN Quick Test.

Pinpoint Test KE12

TEST STEP		RESULT ▶	ACTION TO TAKE
KE15	SERVICE CODE 13/411:		
	Service Code 13/411 indicates that during Engine Running Self-Test, engine rpm could not be controlled within the Self-Test lower limit band. Possible causes: — Improper idle air flow set. — Vacuum leaks. — Throttle linkage binding. — Throttle plates open. — Improper ignition timing (TFI vehicles only). — Throttle body/ISC solenoid contamination. — ISC circuit short to ground. — Damaged ISC solenoid. • **Does engine idle speed appear normal?**	Yes ▶	REMOVE ISC solenoid and INSPECT for contamination. If contamination is present, REFER to FUEL SYSTEM to determine if solenoid is a type that can be cleaned. **No contamination present or solenoid cannot be cleaned:** REPLACE ISC solenoid. RERUN Quick Test. **Solenoid is contaminated and can be cleaned:** CLEAN as necessary RERUN Quick Test. If code/symptom is still present, REPLACE ISC solenoid.
		No ▶	RESET idle airflow to specification. REFER to FUEL SYSTEM for idle airflow adjust procedure. If UNABLE to RESET idle to specification, GO to KE16.

Pinpoint Test KE15

TEST STEP		RESULT ▶	ACTION TO TAKE
KE16	CHECK FOR CONDITIONS AFFECTING IDLE		
	• Check engine vacuum hoses for leaks. Refer to VECI decal. • Check throttle linkage and/or speed control linkage for binding. • Check that throttle plates are closed. • Check for induction system leaks. (i.e. ISC solenoid to throttle body gasket, EGR flange gasket, loose ISC/EGR/PCV, etc.) • Check throttle body for contamination. • Verify base timing is to specification (TFI vehicles only). Refer to VECI decal. • Verify that CANP solenoid(s) is not stuck open (if equipped). • **Are all the above checks OK?**	Yes ▶ No ▶	GO to KE17. SERVICE as necessary. RERUN Quick Test.

Pinpoint Test KE16

TEST STEP		RESULT ▶	ACTION TO TAKE
KE17	CHECK FOR INTERNAL SHORT TO ISC SOLENOID CASE		
	• Key off. • Disconnect ISC solenoid. • Measure resistance from either ISC solenoid pin to ISC housing. • **Is resistance greater than 10,000 ohms?**	Yes ▶ No ▶	GO to KE18. REPLACE ISC solenoid. RERUN Quick Test.

Pinpoint Test KE17

TEST STEP	RESULT ▶	ACTION TO TAKE
KE18 CHECK ISC CIRCUIT FOR SHORT TO GROUND		
• Key off. • ISC solenoid disconnected. • Disconnect the processor 60 pin connector. Inspect for damaged or pushed out pins, corrosion, loose wires, etc. Service as necessary. • Install breakout box, leave processor disconnected. • Measure resistance between Test Pin 21 and Test Pins 40, 46 and 60 at the breakout box. • **Are all resistances greater than 10,000 ohms?**	Yes ▶ No ▶	GO to KE19. SERVICE short circuit. REMOVE breakout box. RECONNECT all components. RERUN Quick Test.

Pinpoint Test KE18

TEST STEP	RESULT ▶	ACTION TO TAKE
KE19 CHECK PROCESSOR OUTPUT		
• Key off. • Breakout box installed. • Reconnect processor to breakout box. • Reconnect ISC solenoid. • Connect DVOM between Test Pin 21 and Test Pin 40 at the breakout box. • Start engine. • Slowly increase rpm to 3000 rpm. • **Is voltage between 3.0 and 11.5 volts?**	Yes ▶	**For 2.0L Probe:** GO to KE20. **For all others:** REMOVE ISC solenoid and INSPECT for contamination. If contamination is present, REFER to FUEL SYSTEM to determine if solenoid is a type that can be cleaned. **No contamination present or solenoid cannot be cleaned:** REPLACE ISC solenoid. RERUN Quick Test. **Solenoid is contaminated and can be cleaned:** CLEAN as necessary RERUN Quick Test. If code / symptom is still present, REPLACE ISC solenoid.
	No ▶	REPLACE processor. REMOVE breakout box. RERUN Quick Test.

Pinpoint Test KE19

TEST STEP		RESULT ▶	ACTION TO TAKE
KE20	CHECK FOR PROPER ENGINE COOLANT FLOW TO ISC-BPA VALVE		
	• Verify that engine coolant is warming up properly. • Check for proper engine coolant level. • Check engine coolant hoses to and from ISC-BPA valve for kinks, leaks, blockage, etc. • **Are the above checks OK?**	Yes ▶	REMOVE ISC solenoid and INSPECT for contamination. If contamination is present, REFER to FUEL SYSTEM to determine if solenoid is a type that can be cleaned. **No contamination present or solenoid cannot be cleaned:** REPLACE ISC solenoid. RERUN Quick Test. **Solenoid is contaminated and can be cleaned:** CLEAN as necessary RERUN Quick Test. If code / symptom is still present, REPLACE ISC solenoid.
		No ▶	SERVICE as necessary. REMOVE breakout box. RECONNECT processor.

Pinpoint Test KE20

TEST STEP		RESULT ▶	ACTION TO TAKE
KE25	LACK OF HIGH IDLE WITH COLD ENGINE: VERIFY THAT ISC-BPA VALVE IS NOT STUCK CLOSED		
	• Key off. • Remove the ISC-BPA valve from the engine. • When the valve is cold (room temperature), blow through the air passage and check if air flows freely. • **Does air flow freely through the valve when it is at room temperature?**	Yes ▶	RETURN to DIAGNOSTIC ROUTINES.
		No ▶	REPLACE ISC-BPA valve. RE-EVALUATE symptom.

Pinpoint Test KE25

TEST STEP		RESULT ▶	ACTION TO TAKE
KE30	DIAGNOSTIC TROUBLE CODE (DTC) 415: CHECK FOR AIR LEAKS		
	DTC 415 indicates that the IAC adaptive learning has reached its minimum learning limit.	Yes ▶	SERVICE as necessary. CLEAR Keep Alive Memory RERUN Quick Test.
	Possible Causes: — Air leaks. — Throttle body / linkage binding. — Damaged IAC solenoid. • Key off. • Inspect the entire inlet air system for leaks such as loose connection at throttle body or air cleaner, cracked or punctured ducting, etc. • **Is an air leak detected in the air inlet system?**	No ▶	GO to KE31.

Pinpoint Test KE30

TEST STEP	RESULT ▶	ACTION TO TAKE
KE31 CHECK FOR VACUUM LEAKS AT IDLE		
• Key On, engine running. • With engine at idle, listen for a vacuum leak. • Inspect IAC valve assembly, throttle body, EGR valve, vacuum hoses and other intake connections for leaks or loose connection. • **Is a fault indicated?**	Yes ▶	SERVICE as necessary. CLEAR Keep Alive Memory RERUN Quick Test.
	No ▶	GO to KE32.

Pinpoint Test KE31

TEST STEP	RESULT ▶	ACTION TO TAKE
KE32 INSPECT THROTTLE BODY AND LINKAGE		
• Key off. • Disconnect linkage from throttle body. • Exercise both throttle plate and throttle body linkage separately while looking for binding or interference. • **Is a fault indicated?**	Yes ▶	SERVICE as necessary. CLEAR Keep Alive Memory RERUN Quick Test.
	No ▶	GO to KE33.

Pinpoint Test KE32

TEST STEP	RESULT ▶	ACTION TO TAKE
KE33 CHECK IDLE SPEED		
• Key off. • Install a tachometer. • Check engine rpm while engine is at operating temperature and at idle.	Yes ▶	CLEAR Keep Alive Memory CHECK idle speed and adjust if applicable. RERUN Quick Test.

Application	RPM
Ranger/Explorer	**Auto** 800 ± 50 Drive 720 ± 50 Neutral **Manual** 750 ± 50 Neutral

• **Is idle rpm within range?**	No ▶	CLEAR Keep Alive Memory RESET idle speed to specification (refer to fuel delivery and air induction for idle airflow adjustment procedure). If unable to reset idle or system is not adjustable, REPLACE IAC solenoid or throttle body assembly as necessary. RERUN Quick Test.

Pinpoint Test KE33

TEST STEP	RESULT ▶	ACTION TO TAKE
KE35 DIAGNOSTIC TROUBLE CODE (DTC) 416: CHECK FOR A PLUGGED AIR FILTER		
DTC 416 indicates that the IAC adaptive learning has reached its maximum learning limit.	Yes ▶	SERVICE as necessary. CLEAR Keep Alive Memory RERUN Quick Test.
Possible Causes: — Plugged air filter. — Sludged or damaged throttle body. — Sludged or damaged IAC solenoid. • Key off. • Remove air filter and verify it is not plugged by excessive dirt, water, snow, debris, etc. • **Is the air filter plugged?**	No ▶	GO to KE36.

Pinpoint Test KE35

TEST STEP		RESULT ▶	ACTION TO TAKE
KE36	CHECK IAC SOLENOID AND THROTTLE BODY FOR DAMAGE OR CONTAMINATION		
	• Key off. • Inspect IAC and throttle body for obvious damage. Verify that throttle plate moves without binding and is not bent. • Inspect IAC and throttle body for excessive contamination. Clean if applicable. • **Was any damage or excessive contamination found?**	Yes ▶ No ▶	SERVICE as necessary. CLEAR Keep Alive Memory RERUN Quick Test. GO to KE37.

Pinpoint Test KE36

TEST STEP		RESULT ▶	ACTION TO TAKE
KE37	CHECK IDLE SPEED		
	• Key off. • Install a tachometer. • Check engine rpm while engine is at operating temperature, and at idle. **Application** / **RPM** Ranger/Explorer: **Auto** 800 ± 50 Drive, 720 ± 50 Neutral; **Manual** 750 ± 50 Neutral • **Is idle rpm within range?**	Yes ▶ No ▶	**Idle is OK with no drive symptom:** Testing complete. CLEAR Keep Alive Memory RERUN Quick Test. **Idle is OK with a drive symptom:** GO to Diagnostic Routines, and follow chart for symptom in question. GO to Diagnostic Rountines, and follow chart for the idle concern in question.

Pinpoint Test KE37

KF - Testing Notes

NOTE: You should enter this Pinpoint Test only when you have been directed here from Quick Test or Diagnosis By Symptom.

REMEMBER

This pinpoint test is intended to diagnose only the following:

- Harness circuits: EDF, HEDF, EDF Power-To-Fan, HEDF Power-To-Fan, IGN Start/Run and GND.

- EDF Relay

- HEDF Relay

- Cooling Fan

- Processor assembly

DESCRIPTION

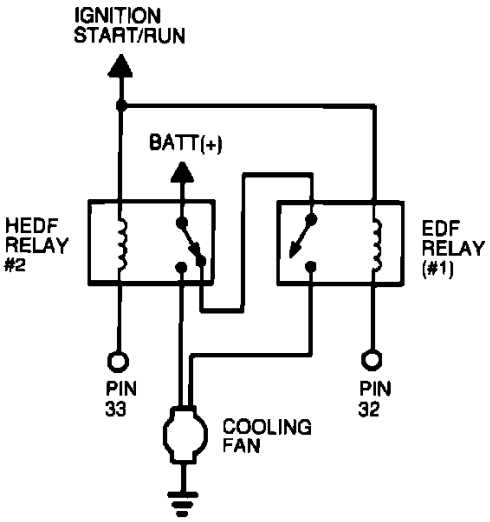

Electro Drive Fan/High Electro Drive Fan

The EEC-IV processor determines engine cooling fan requirements and controls the fan operation through the EDF and HEDF outputs. The HEDF and EDF relays are normally open relays.

BOTH FANS OFF

The HEDF output is off. The EDF output is off, which leaves the normally open relay open.

EDF ON

The EDF output is turned off, which closes the normally closed EDF relay. The HEDF output is off, and BATT(+) is supplied to the EDF relay through the HEDF relay.

HEDF ON

The HEDF output is on, which closes the HEDF relay. With the HEDF relay contacts closed, BATT(+) is not longer supplied to the EDF relay, Preventing both fan speeds from being activated at the same time.

TEST STEP		RESULT ▶	ACTION TO TAKE
KF1	SERVICE CODE 563 or 564: CHECK FOR IGNITION START/RUN CIRCUIT VOLTAGE AT HEDF/EDF RELAY		
	Service Code 563 indicates an HEDF primary circuit failure. Service Code 564 indicates an EDF primary circuit failure. Possible causes are: — Open or shorted circuit. — Damaged fan relay. — Damaged processor. NOTE: **During diagnosis, use the chart below to determine the correct pin number, circuit and relay being tested.**	Yes ▶ No ▶	GO to KF2. VERIFY integrity of fuse/fuse link for IGN Start/Run voltage supply to EDF/HEDF relay. If OK, SERVICE open circuit. RECONNECT EDF/HEDF relay. RERUN Quick Test.

Code	Circuit	Test Pin Number: Escort/Tracer	Test Pin Number: Probe	Fan Relay
563	HEDF	31	33	HEDF (2)
564	EDF	35	32	EDF (1)

- Key off.
- Disconnect EDF or HEDF relay.
- Key on.
- Measure voltage between IGN Start/Run circuit at the EDF/HEDF relay vehicle harness connector and chassis ground.
- **Is voltage greater than 10.5 volts?**

Pinpoint Test KF1

TEST STEP		RESULT ▶	ACTION TO TAKE
KF2	ENTER OUTPUT STATE CHECK		
	NOTE: **Do not use STAR tester for this Step, use VOM/DVOM.**	Yes ▶	REMAIN in Output State Check. GO to KF3.
	• Key off, wait 10 seconds. • DVOM on 20 volt scale. • Disconnect electrical connector on the speed control servo, if equipped. • Connect DVOM negative test lead to STO at the Self-Test connector and positive test lead to the battery positive post. • Jumper STI to SIG RTN at the Self-Test connector. • Perform Key On Engine Off Self-Test until the completion of the Continuous Memory Codes. • DVOM will indicate less than 1.0 volt when test is complete. • Depress and release throttle. • **Does voltage increase to greater than 10.5 volts?**	No ▶	DEPRESS throttle to WOT and RELEASE. If STO voltage does not go high, leave equipment hooked up and GO to Pinpoint Test Step QC2.

Pinpoint Test KF2

TEST STEP		RESULT ▶	ACTION TO TAKE
KF3	CHECK FOR EDF/HEDF CIRCUIT CYCLING		
	• Still in Output State Check. • EDF or HEDF relay disconnected. • DVOM on 20 volt scale. • Connect DVOM positive test lead to the IGN Start/Run circuit and the negative test lead to the EDF or HEDF circuit at the EDF/HEDF relay vehicle harness connector. • Depress and release throttle to cycle outputs off. • While observing DVOM, depress throttle again. For EDF, wait until "CHECK ENGINE" light flashes once (10 seconds). For HEDF, wait until "CHECK ENGINE" light flashes twice (15 seconds). Release throttle. The EDF or HEDF output is now "on". To cycle "off", depress and release throttle. • **Does voltage cycle high and low (about 1.0 volt change)?**	Yes No	▶ REPLACE EDF or HEDF relay. REMOVE jumper. RERUN Quick Test. ▶ REMOVE jumper. GO to KF4.

Pinpoint Test KF3

TEST STEP		RESULT ▶	ACTION TO TAKE
KF4	CHECK CONTINUITY OF EDF/HEDF CIRCUIT		
	• Key off. • EDF or HEDF relay disconnected. • Disconnect processor 60 pin connector. Inspect for damaged or pushed out pins, corrosion, loose wires, etc. Service as necessary. • Install breakout box, leave processor disconnected. • **For Code 563:** — Measure resistance between applicable Test Pin at the breakout box and HEDF circuit at the HEDF relay vehicle harness connector. • **For Code 564:** — Measure resistance between applicable Test Pin at the breakout box and EDF circuit at the EDF relay vehicle harness connector. • **Is resistance less than 5.0 ohms?**	Yes No	▶ GO to KF5. ▶ SERVICE open circuit. REMOVE breakout box. RECONNECT all components. RERUN Quick Test.

Pinpoint Test KF4

TEST STEP		RESULT ▶	ACTION TO TAKE
KF5	CHECK EDF/HEDF CIRCUIT FOR SHORT TO POWER		
	• Key on. • Breakout box installed, processor disconnected. • EDF or HEDF relay disconnected. • Measure voltage between applicable Test Pin (HEDF or EDF) at the breakout box and battery negative post. • **Is voltage less than 1.0 volts?**	Yes No	▶ GO to KF6. ▶ SERVICE short circuit. REMOVE breakout box. RECONNECT all components. RERUN Quick Test. If code is still present, REPLACE processor.

Pinpoint Test KF5

TEST STEP		RESULT ▶	ACTION TO TAKE
KF6	CHECK EDF/HEDF CIRCUIT FOR SHORT TO GROUND		
	• Key off. • Breakout box installed, processor disconnected. • EDF or HEDF relay disconnected. • Measure resistance between applicable Test Pin (HEDF or EDF) and Test Pins 40 and 60 at the breakout box. • **Is resistance greater than 10,000 ohms?**	Yes ▶ No ▶	REPLACE processor. REMOVE breakout box. RECONNECT all components. RERUN Quick Test. SERVICE short circuit. REMOVE breakout box. RECONNECT all components. RERUN Quick Test.

Pinpoint Test KF6

TEST STEP		RESULT ▶	ACTION TO TAKE
KF10	LOW SPEED (EDF) AND/OR HIGH SPEED (HEDF) COOLING FAN DOES NOT OPERATE: CHECK FOR VOLTAGE TO EDF RELAY		
	• Key off. • Disconnect EDF relay. • Key on. • Measure voltage from HEDF RELAY pin at the EDF relay vehicle harness connector and battery negative post. • **Is voltage greater than 10.5 volts?** 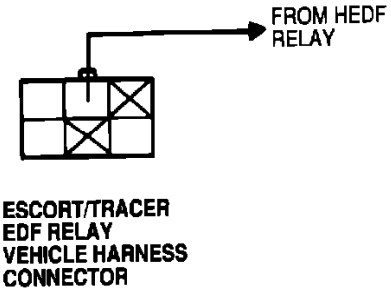 	Yes ▶ No ▶	GO to KF13. GO to KF11.

Pinpoint Test KF10

TEST STEP		RESULT ▶	ACTION TO TAKE
KF11	CHECK FOR VOLTAGE TO HEDF RELAY		
	• Key off. • EDF relay disconnected. • Disconnect HEDF relay. • Key on. • Measure voltage between the IGN relay input (BATT+ for Probe) pin at the HEDF relay vehicle harness connector and battery negative post. • **Is voltage greater than 10.5 volts?** 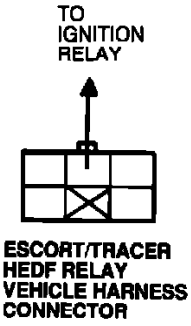 	Yes ▶ No ▶	GO to KF12. VERIFY integrity of fuse/fuse link. For Escort/Tracer, also check operation of IGN relay. If OK, SERVICE open circuit. RECONNECT EDF and HEDF relays. RE-EVALUATE symptoms.

Pinpoint Test KF11

TEST STEP	RESULT ▶	ACTION TO TAKE
KF12 CHECK CONTINUITY BETWEEN EDF AND HEDF RELAYS		
• Key off. • EDF and HEDF relays disconnected. • Measure resistance between the HEDF input pin at the EDF relay vehicle harness connector and the output to EDF pin at the HEDF relay vehicle harness connector. • **Is resistance less than 5.0 ohms?** 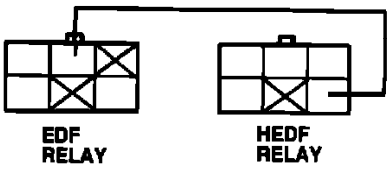 EDF RELAY HEDF RELAY ESCORT/TRACER VEHICLE HARNESS CONNECTORS	Yes ▶ No ▶	REPLACE HEDF relay. RECONNECT all components. RE-EVALUATE symptom. SERVICE open circuit. RECONNECT EDF and HEDF relays. RE-EVALUATE symptom.

Pinpoint Test KF12

TEST STEP	RESULT ▶	ACTION TO TAKE
KF13 CHECK CIRCUITS FROM EDF RELAY TO FAN		
• Key off. • EDF relay disconnected. • Insert jumper wire from HEDF Relay pin and Power-To-Fan pin at the EDF relay vehicle harness connector. • Key on. • **Does fan run?** 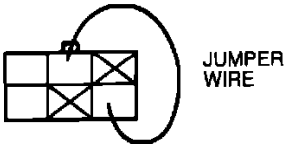 JUMPER WIRE ESCORT/TRACER EDF RELAY VEHICLE HARNESS CONNECTOR	Yes ▶ No ▶	REMOVE jumper. GO to KF16. REMOVE jumper. GO to KF14.

Pinpoint Test KF13

TEST STEP		RESULT ▶	ACTION TO TAKE
KF14	CHECK EDF POWER-TO-FAN CIRCUIT CONTINUITY		
	• Key off. • EDF relay disconnected. • Disconnect cooling fan. • Measure resistance between the EDF Power-To-Fan output pin at the EDF vehicle harness connector and the EDF Power-To-Fan input pin at the cooling fan vehicle harness connector. • **Is resistance less than 5.0 ohms?**	Yes ▶ No ▶	GO to KF15. SERVICE open circuit. RECONNECT all components. RE-EVALUATE symptom.

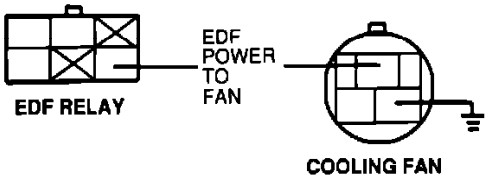

ESCORT/TRACER VEHICLE HARNESS CONNECTOR

Pinpoint Test KF14

TEST STEP		RESULT ▶	ACTION TO TAKE
KF15	CHECK COOLING FAN GROUND CIRCUIT		
	• Key off. • EDF relay disconnected. • Cooling fan disconnected. • Measure resistance between GND circuit at the cooling fan vehicle harness connector and battery negative post. • **Is resistance less than 5.0 ohms?**	Yes ▶ No ▶	REPLACE cooling fan. RECONNECT all components. RE-EVALUATE symptom. SERVICE open circuit. RECONNECT all components. RE-EVALUATE symptom.

Pinpoint Test KF15

TEST STEP		RESULT ▶	ACTION TO TAKE
KF16	CHECK CIRCUITS FROM HEDF RELAY TO FAN		
	• Key off. • EDF relay disconnected. • Disconnect processor 60 pin connector. Inspect for damaged or pushed out pins, corrosion, loose wires, etc. Service as necessary. • Install breakout box, leave processor disconnected. **For Escort/Tracer:** — Insert a jumper wire between Test Pin 31 and Test Pin 40 at the breakout box. **For Probe:** — Insert a jumper wire between Test Pin 33 and Test Pin 40 at the breakout box. • Key on. • **Does fan run at high speed?**	Yes ▶ No ▶	REPLACE EDF relay. REMOVE breakout box. RE-EVALUATE symptom. REMOVE jumper. GO to KF17.

Pinpoint Test KF16

TEST STEP	RESULT ▶	ACTION TO TAKE
KF17 CHECK HEDF POWER-TO-FAN VOLTAGE AT FAN		
• Key off. • Breakout box installed, processor disconnected. • EDF relay disconnected. • Disconnect cooling fan. • Again insert a jumper wire between Test Pin 31 (Escort/Tracer) or Test Pin 33 (Probe) and Test Pin 40 at the breakout box. • Key on. • Measure voltage between HEDF Power-To-Fan circuit at the cooling fan vehicle harness connector and battery negative post. • **Is voltage greater than 10.5 volts?** **ESCORT/TRACER** **COOLING FAN VEHICLE HARNESS CONNECTOR**	Yes ▶ No ▶	REPLACE cooling fan. REMOVE breakout box. RECONNECT all components. RE-EVALUATE symptom. REMOVE jumper. GO to KF18.

Pinpoint Test KF17

TEST STEP	RESULT ▶	ACTION TO TAKE
KF18 CHECK HEDF POWER-TO-FAN CIRCUIT CONTINUITY		
• Key off. • Breakout box installed, processor disconnected. • EDF relay disconnected. • Cooling fan disconnected. • Disconnect HEDF relay. • Measure resistance between the HEDF Power-To-Fan output pin at the HEDF vehicle harness connector and the HEDF Power-To-Fan input pin at the cooling fan vehicle harness connector. • **Is resistance less than 5.0 ohms?** 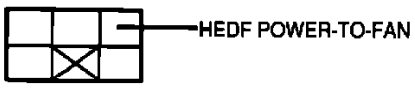 **ESCORT/TRACER** **HEDF RELAY** **VEHICLE HARNESS CONNECTOR**	Yes ▶ No ▶	REPLACE HEDF relay. REMOVE breakout box. RECONNECT all components. RE-EVALUATE symptom. SERVICE open circuit. REMOVE breakout box. RECONNECT all components. RE-EVALUATE symptom.

Pinpoint Test KF18

TEST STEP	RESULT ▶	ACTION TO TAKE
KF25 LOW SPEED (EDF) OR HIGH SPEED (HEDF) COOLING FAN ALWAYS ON: VERIFY IGNITION RELAY IS OPENING		
NOTE: **Verify that A/C is off during testing.** • **For Probe, go directly to KF26.** • **Is cooling fan always on with key off, but operating normally with key on?**	Yes ▶ No ▶	VERIFY that IGN relay contacts are not always closed. If OK, CHECK circuit from IGN relay to fan relay(s) for short to BATT(+). GO to KF26.

Pinpoint Test KF25

TEST STEP	RESULT ▶	ACTION TO TAKE
KF26 CHECK FOR EDF RELAY ALWAYS CLOSED ● Key off. ● Disconnect EDF relay. ● Key on. ● **Does fan continue to run?**	Yes ▶ No ▶	GO to KF27. REPLACE EDF relay. RE-EVALUATE symptom.

Pinpoint Test KF26

TEST STEP	RESULT ▶	ACTION TO TAKE
KF27 CHECK HEDF RELAY ● Key off. ● EDF relay disconnected. ● Disconnect HEDF relay. ● Key on. ● **Does fan continue to run?**	Yes ▶ No ▶	GO to KF28. REPLACE HEDF relay. RECONNECT EDF relay. RE-EVALUATE symptom.

Pinpoint Test KF27

TEST STEP	RESULT ▶	ACTION TO TAKE
KF28 CHECK EDF POWER-TO-FAN CIRCUIT FOR SHORT TO POWER ● Key off. ● EDF and HEDF relay disconnected. ● Disconnect cooling fan. ● Key on. ● Measure voltage between EDF Power-To-Fan circuit at the cooling fan vehicle harness connector and battery negative post. ● **Is voltage greater than 1.0 volt?** 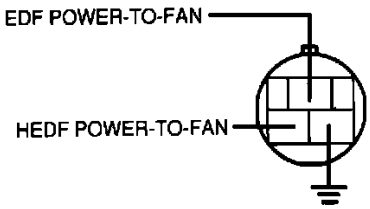 **ESCORT/TRACER COOLING FAN VEHICLE HARNESS CONNECTOR**	Yes ▶ No ▶	SERVICE Short-To-Power in EDF Power-To-Fan circuit. RECONNECT all components. RE-EVALUATE symptom. SERVICE Short-To-Power in HEDF Power-To-Fan circuit. RECONNECT all components. RE-EVALUATE symptom.

Pinpoint Test KF28

KL - Testing Notes

NOTE: You should enter this Pinpoint Test only when you have been directed here from Diagnosis By Symptom.

REMEMBER

This Pinpoint Test is intended to diagnose only the following:

- Harness circuit: SIL
- Top Gear Switch
- SIL Dimmer Relay
- SIL Bulb and SIL Circuit Fuse
- Processor Assembly

TEST STEP		RESULT ▶	ACTION TO TAKE
KL1	CHECK SIL OPERATION		
	NOTE: **To verify SIL operation, observe the SIL while driving the vehicle. The SIL should turn on when optimum shift speed is reached in each gear and remain off while in the highest gear.** If the SIL is always on, look for a short to ground in the SIL circuit. If the SIL is always off, look for an open in the SIL circuit. • **Is SIL on all the time?**	Yes ▶ No ▶	**For Escort/Tracer:** GO to KL10. **For Tempo/Topaz:** GO to KL6. GO to KL2.

Pinpoint Test KL1

TEST STEP		RESULT ▶	ACTION TO TAKE
KL2	CHECK SIL CIRCUIT FUSE		
	• Key off. • Remove SIL circuit fuse and inspect. • **Is fuse OK?**	Yes ▶ No ▶	RECONNECT SIL circuit fuse. GO to KL3. SERVICE short to ground between SIL circuit fuse and SIL bulb. REPLACE SIL circuit fuse. VERIFY SIL operation.

Pinpoint Test KL2

TEST STEP		RESULT ▶	ACTION TO TAKE
KL3	CHECK SIL BULB		
	• Key off. • Remove SIL bulb and inspect. • **Is SIL bulb OK?**	Yes ▶ No ▶	**For Escort/Tracer:** GO to KL15. For Tempo/Topaz: RECONNECT SIL bulb. GO to KL4. REPLACE SIL bulb. VERIFY SIL operation.

Pinpoint Test KL3

TEST STEP		RESULT ▶	ACTION TO TAKE
KL4	CHECK SIL DIMMER RELAY CONTINUITY		
	• Key off. • Disconnect SIL dimmer relay. • Measure resistance between Pins 3 and 5 on SIL dimmer relay. • **Is resistance less than 5.0 ohms?**	Yes ▶ No ▶	GO to KL5. REPLACE SIL dimmer relay. VERIFY SIL operation.

Pinpoint Test KL4

TEST STEP		RESULT ▶	ACTION TO TAKE
KL5	CHECK SIL DIMMER RELAY FUNCTION		
	• Key off. • SIL dimmer relay disconnected. • Apply 12 volts across Pins 1 and 2 on the SIL dimmer relay. • Measure resistance between Pins 3 and 5 on SIL dimmer relay. • **Is resistance between 40 ohms and 55 ohms?**	Yes ▶ No ▶	GO to KL6. REPLACE SIL dimmer relay. VERIFY SIL operation.

Pinpoint Test KL5

TEST STEP		RESULT ▶	ACTION TO TAKE
KL6	CHECK VOLTAGE AT SIL DIMMER RELAY		
	• Key on, engine off. • Disconnect SIL dimmer relay. • Measure voltage between Pin 5 at the SIL dimmer relay vehicle harness connector and the battery negative post. • **Is voltage greater than 5.0 volts?**	Yes ▶ No ▶	RECONNECT SIL dimmer relay. GO to KL7. SERVICE circuit between SIL dimmer relay and SIL fuse. VERIFY SIL operation.

Pinpoint Test KL6

TEST STEP		RESULT ▶	ACTION TO TAKE
KL7	CHECK CONTINUITY OF SIL CIRCUIT		
	• Key off. • SIL dimmer relay disconnected. • Disconnect Powertrain Control Module (PCM). Inspect for damaged or pushed out pins, corrosion, loose wires, etc. Service as necessary. • Install breakout box, leave PCM disconnected. • Measure resistance between Test Pin 53 at the breakout box and the SIL circuit connector for Pin 3. • **Is resistance less than 5.0 ohms?**	Yes ▶ No ▶	REPLACE PCM. REMOVE breakout box. RERUN Quick Test. SERVICE open circuit between SIL dimmer relay and the PCM. REMOVE breakout box. RECONNECT all components. VERIFY SIL operation.

Pinpoint Test KL7

TEST STEP		RESULT ▶	ACTION TO TAKE
KL8	CHECK SIL CIRCUIT FOR SHORT TO GROUND BETWEEN SIL DIMMER RELAY AND SIL BULB		
	• Key off. • Disconnect SIL dimmer relay. • Key on, engine off. • **Is the SIL ON with the SIL dimmer relay disconnected?**	Yes ▶ No ▶	SERVICE short to ground between SIL dimmer relay and SIL bulb. RECONNECT SIL dimmer relay. RE-EVALUATE symptom. GO to KL9.

Pinpoint Test KL8

TEST STEP		RESULT ▶	ACTION TO TAKE
KL9	CHECK SIL DIMMER RELAY FOR INTERNAL SHORT TO GROUND		
	• Key off. • SIL dimmer relay disconnected. • Measure resistance between Pins 3 and 1 on the SIL dimmer relay. • **Is resistance less than 5.0 ohms?**	Yes ▶ No ▶	REPLACE SIL dimmer relay. VERIFY SIL operation. RECONNECT SIL dimmer relay. GO to KL10.

Pinpoint Test KL9

TEST STEP		RESULT ▶	ACTION TO TAKE
KL10	CHECK SIL CIRCUIT FOR SHORT TO GROUND BETWEEN THE PCM AND SIL DIMMER RELAY		
	• Key off. • Disconnect Powertrain Control Module (PCM). Inspect for damaged or pushed out pins, corrosion, loose wires, etc. Service as necessary. • Key on, engine off. • **Is SIL ON with PCM disconnected?**	Yes ▶ No ▶	SERVICE short to ground between SIL dimmer relay and PCM. RECONNECT PCM. RE-EVALUATE symptom. REPLACE PCM. RE-EVALUATE symptom.

Pinpoint Test KL10

TEST STEP	RESULT ▶	ACTION TO TAKE
KL11 CHECK SIL CIRCUIT FOR SHORT TO GROUND		
• Key off. • Reconnect top gear switch. • Shift transmission to highest gear. • Breakout box installed, PCM disconnected. • Measure resistance between Test Pin 53 and Test Pin 60 at the breakout box. • **Is resistance greater than 10,000 ohms?**	Yes ▶ No ▶	REPLACE PCM. REMOVE breakout box. RERUN Quick Test. SERVICE short to ground between top gear switch and PCM . REMOVE breakout box. RECONNECT PCM. VERIFY SIL operation.

Pinpoint Test KL11

TEST STEP	RESULT ▶	ACTION TO TAKE
KL15 CHECK FOR VOLTAGE TO SIL SOCKET		
• Key off. • SIL bulb removed. • Transmission in any gear except top gear. • Key on, engine off. • Measure voltage between power contact at SIL socket and chassis ground. • **Is voltage greater than 10.5 volts?**	Yes ▶ No ▶	GO to KL17. RECONNECT SIL bulb. GO to KL16.

Pinpoint Test KL15

TEST STEP	RESULT ▶	ACTION TO TAKE
KL15 CHECK FOR VOLTAGE TO SIL SOCKET		
• Key off. • SIL bulb removed. • Transmission in any gear except top gear. • Key on, engine off. • Measure voltage between power contact at SIL socket and chassis ground. • **Is voltage greater than 10.5 volts?**	Yes ▶ No ▶	GO to KL17. RECONNECT SIL bulb. GO to KL16.

Pinpoint Test KL15

TEST STEP	RESULT ▶	ACTION TO TAKE
KL16 CHECK OPERATION OF TOP GEAR SWITCH		
NOTE: **The top gear switch is a normally closed switch and is in the ignition RUN circuit to the SIL bulb. The top gear switch should be open only when the vehicle is shifted to top gear.** • Key off. • Transmission in any gear except top gear. • Disconnect top gear switch. • Measure resistance of the top gear switch. • **Is resistance less than 5.0 ohms?**	Yes ▶ No ▶	SERVICE open in ignition run circuit to the SIL bulb socket. VERIFY SIL operation. REPLACE top gear switch. VERIFY SIL operation.

Pinpoint Test KL16

TEST STEP		RESULT ▶	ACTION TO TAKE
KL16	CHECK OPERATION OF TOP GEAR SWITCH		
	NOTE: **The top gear switch is a normally closed switch and is in the ignition RUN circuit to the SIL bulb. The top gear switch should be open only when the vehicle is shifted to top gear.** • Key off. • Transmission in any gear except top gear. • Disconnect top gear switch. • Measure resistance of the top gear switch. • **Is resistance less than 5.0 ohms?**	Yes ▶ No ▶	SERVICE open in ignition run circuit to the SIL bulb socket. VERIFY SIL operation. REPLACE top gear switch. VERIFY SIL operation.

Pinpoint Test KL16

TEST STEP		RESULT ▶	ACTION TO TAKE
KL17	CHECK CONTINUITY OF SIL CIRCUIT		
	• Key off. • SIL bulb removed. • Disconnect processor 60 pin-connector. Inspect for damaged or pushed out pins, corrosion, loose wires, etc. Service as necessary. • Install breakout box, leave processor disconnected. • Measure resistance between Test Pin 53 at the breakout box and SIL circuit contact at the SIL bulb socket. • **Is resistance less than 5.0 ohms?**	Yes ▶ No ▶	REPLACE processor. REMOVE breakout box. RECONNECT SIL bulb. VERIFY SIL operation. SERVICE open circuit. REMOVE breakout box. RECONNECT all components. VERIFY SIL operation.

Pinpoint Test KL17

TEST STEP		RESULT ▶	ACTION TO TAKE
KL18	OPERATION OF THE THUNDERBIRD SC SIL		
	The Thunderbird SC SIL lamp will light and an audible chime will sound under the following conditions: — Key in RUN, engine off. — At high vehicle speeds, when engine speed is too high for the transmission gear selected, as follows: • Greater than 93 mph (4000 rpm) in 3rd gear for A/T. • Greater than 121 mph (4300 rpm) in 4th gear for M/T. At the same time that the SIL and chime are activated at high speed, the EEC will take action to prevent engine damage from overheating. If coolant gets too hot, or 60 seconds elapses at high speeds, the EEC will shut off three injectors until a safe operating speed is reached or transmission is upshifted to top gear. This EEC action is independent of the SIL and warning chime and will occur regardless of a malfunction in these circuits. **Possible causes for SIL always on (other than normal operation):** — SIL circuit to processor shorted — Damaged processor **Possible causes for SIL always off (other than normal operation):** — SIL fuse — SIL bulb — SIL circuit open — Damaged processor • **Is SIL always on or always off?**	Always On ▶ Always Off ▶	GO to KL23. GO to KL19.

Pinpoint Test KL18

TEST STEP	RESULT ▶	ACTION TO TAKE
KL19 CHECK SIL CIRCUIT FUSE		
• Key off. • Remove SIL circuit fuse and inspect. • **Is fuse OK?**	Yes ▶ No ▶	GO to KL20. SERVICE short to ground between SIL circuit fuse and SIL bulb. REPLACE SIL circuit fuse.

Pinpoint Test KL19

TEST STEP	RESULT ▶	ACTION TO TAKE
KL20 CHECK SIL BULB		
• Key off. • Remove the SIL bulb and inspect. • **Is SIL bulb OK?**	Yes ▶ No ▶	GO to KL21. REPLACE SIL bulb.

Pinpoint Test KL20

TEST STEP	RESULT ▶	ACTION TO TAKE
KL21 CHECK FOR VOLTAGE TO SIL SOCKET		
• Key off • SIL bulb removed. • Key on, engine off. • Measure voltage between power contact at SIL socket and chassis ground. • **Is voltage greater than 10.5 volts?**	Yes ▶ No ▶	GO to KL22. SERVICE open in ignition START/RUN circuit to the SIL bulb socket.

Pinpoint Test KL21

TEST STEP	RESULT ▶	ACTION TO TAKE
KL22 CHECK CONTINUITY OF SIL CIRCUIT		
• Key off. • SIL bulb removed. • Disconnect processor 60 pin connector. Inspect for damaged or pushed out pins, corrosion, loose wires, etc. Service as necessary. • Install breakout box, leave processor disconnected. • Measure resistance between Test Pin 53 at the breakout box and SIL circuit contact at the SIL bulb socket. • **Is resistance less than 5.0 ohms?**	Yes ▶ No ▶	REPLACE processor. REMOVE breakout box. RECONNECT SIL bulb. SERVICE open circuit. REMOVE breakout box. RECONNECT all components.

Pinpoint Test KL22

TEST STEP	RESULT ▶	ACTION TO TAKE
KL23 CHECK SIL CIRCUIT FOR SHORT TO GROUND		
• Key off. • Disconnect processor 60 pin connector. Inspect for damaged or pushed out pins, corrosion, loose wires, etc. Service as necessary. • Key on, engine off. • **Is the SIL lamp ON with the processor disconnected?**	Yes ▶ No ▶	SERVICE short to ground between SIL bulb and processor. RECONNECT processor. RE-EVALUATE symptom. REPLACE processor. RE-EVALUATE symptom.

Pinpoint Test KL23

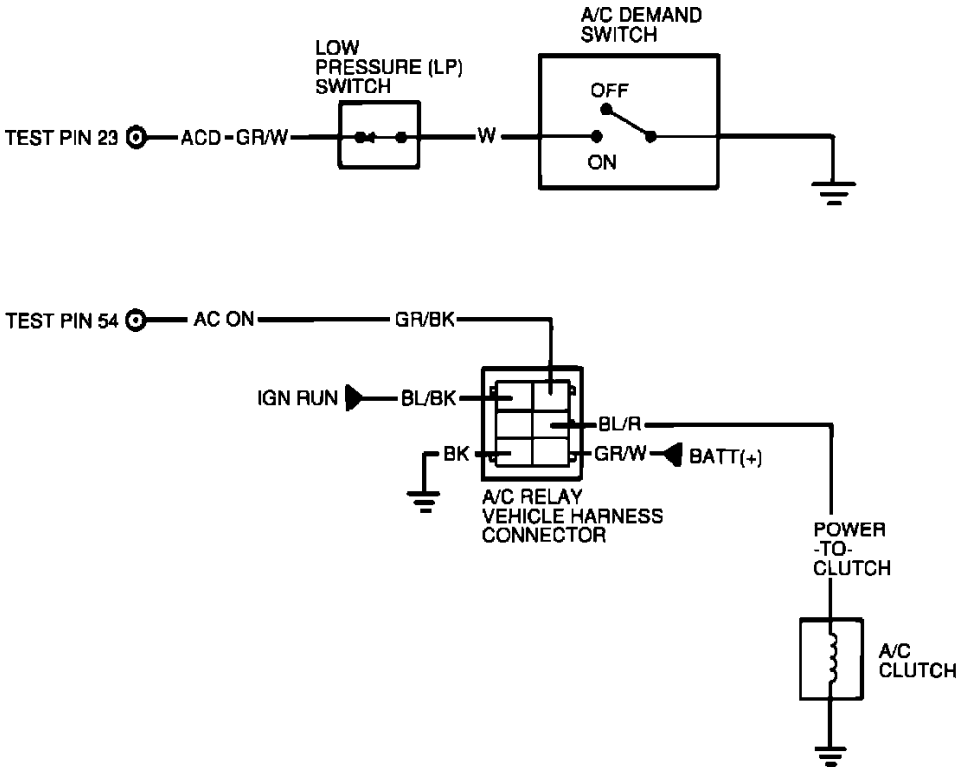

A/C Circuit Diagram

KM - Testing Notes

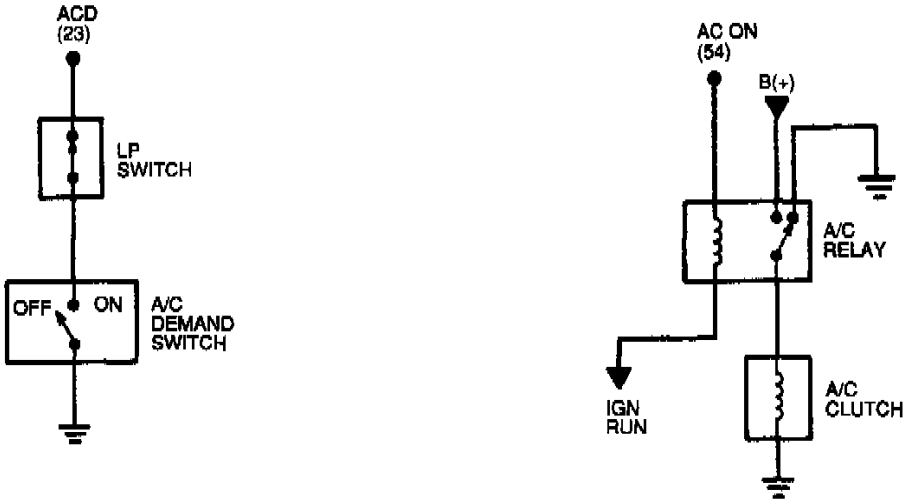

A/C Circuit Schematic

When the A/C demand switch is turned on and the Low Pressure **(LP)** switch is closed, the ACD input (Pin 23) to the Powertrain Control Module **(PCM)** is low, indicating that A/C is requested. The PCM will then ground the A/C ON output (Pin 54) which will energize the coil in the A/C relay. This will close the normally open contacts, sending B(+) voltage to the A/C Clutch. The PCM will also adjust idle as necessary.

TEST STEP		RESULT ▶	ACTION TO TAKE
KM1	NO A/C: CHECK FOR VOLTAGE AT A/C CLUTCH		
	NOTE: **Before proceeding with "NO A/C" diagnostics, verify integrity of related fuses in fuse box.** ● Key off. ● Disconnect A/C clutch. ● A/C demand switch to A/C on. ● For Escort/Tracer and Probe, turn blower motor switch on (any speed). ● Start engine, wait 10 seconds. ● Measure voltage between the power side of the A/C clutch vehicle harness connector and battery negative post (allow time for normal ON/OFF cycling of the ACC/S or LP switch). ● **Is voltage greater than 10.5 volts?**	Yes ▶ No ▶	EEC system OK. REFER to heating and air conditioning to check for poor ground, open circuit in clutch, mechanical problems, etc. **For 2.0L Probe:** GO to KM50. **All others:** GO to KM2.

Pinpoint Test KM1

TEST STEP		RESULT ▶	ACTION TO TAKE
KM2	CHECK POWER-TO-CLUTCH CIRCUIT CONTINUITY		
	● Key off. ● A/C clutch disconnected. ● Disconnect WAC relay. ● Measure resistance between power side of the A/C clutch vehicle harness connector and Power-to-Clutch pin at the WAC relay vehicle harness connector. ● **Is resistance less than 5.0 ohms?**	Yes ▶ No ▶	RECONNECT A/C clutch. GO to KM3. SERVICE open circuit. RECONNECT all components. RE-EVALUATE symptom.

Pinpoint Test KM2

TEST STEP		RESULT ▶	ACTION TO TAKE
KM3	CHECK FOR POWER ON A/C DEMAND CIRCUIT		
	● Key on, engine off. ● WAC relay disconnected. ● A/C demand switch to A/C. **For Escort/Tracer:** — Blower motor switch on (any speed). — Measure voltage between A/C relay input pin at WAC relay vehicle harness connector and chassis ground. **All Others:** — Measure voltage between A/C demand input pin at WAC relay vehicle harness connector and chassis ground. ● **Is voltage greater than 10.5 volts?**	Yes ▶ No ▶	GO to KM5. **For Escort/Tracer:** GO to KM4. **For all others:** VERIFY operation of A/C clutch cyclic pressure switch and A/C demand switch. REFER to HEATING VENTILATION AND AIR CONDITIONING. If OK, SERVICE open circuit. RECONNECT all components. RE-EVALUATE symptom.

Pinpoint Test KM3

TEST STEP		RESULT ▶	ACTION TO TAKE
KM4	CHECK CONTINUITY BETWEEN WAC RELAY AND A/C RELAY		
	• Key off. • WAC relay disconnected. • Disconnect A/C relay. • Measure resistance between the A/C relay output to the WAC relay at the A/C relay vehicle harness connector and the A/C relay input at the WAC relay vehicle harness connector. • **Is resistance less than 5.0 ohms?**	Yes ▶	RECONNECT WAC relay. REFER to HEATING VENTILATION AND AIR CONDITIONING to check for proper input to A/C relay from BATT(+), IGN RUN and A/C demand circuits; proper A/C relay operation, etc.
		No ▶	SERVICE open circuit. RECONNECT WAC relay and A/C relay.

Pinpoint Test KM4

TEST STEP		RESULT ▶	ACTION TO TAKE
KM5	CHECK WAC CIRCUIT FOR SHORT TO GROUND		
	• Key off. • WAC relay disconnected. • Disconnect processor 60 pin connector. Inspect for damaged or pushed out pins, corrosion, loose wires, etc. Service as necessary. Leave processor disconnected. • Measure resistance between WAC circuit at the WAC relay harness connector and chassis ground. • **Is resistance greater than 10,000 ohms?**	Yes ▶ No ▶	GO to KM6. SERVICE short circuit. RECONNECT all components. RE-EVALUATE symptom.

Pinpoint Test KM5

TEST STEP		RESULT ▶	ACTION TO TAKE
KM6	CHECK FOR VOLTAGE AT ACCS/ACD INPUT TO PCM		
	• Key off. • WAC relay disconnected. • PCM disconnected. • Install breakout box, leave PCM disconnected. • Key on, engine off. • A/C demand switch to A/C on. • For Escort/Tracer, turn blower motor switch on (any speed). • Measure voltage between Test Pin 10 and Test Pin 40 at the breakout box. • For 2.3L Ranger, also measure voltage between Test Pin 43 (ACD) and Test Pin 40 at the breakout box. • **Is voltage(s) greater than 10.5 volts?**	Yes ▶ No ▶	GO to KM7. SERVICE open in ACCS/ACD circuit. REMOVE breakout box. RECONNECT all components. RE-EVALUATE symptom.

Pinpoint Test KM6

TEST STEP		RESULT ▶	ACTION TO TAKE
KM7	CHECK WAC RELAY		
	• Key off. • Breakout box installed, processor disconnected. • Reconnect WAC relay. • Disconnect A/C clutch. • Key on, engine off. • A/C demand switch to A/C. • For Escort/Tracer turn blower motor switch on (any speed). • Measure voltage between the power side of the A/C clutch vehicle harness connector and the battery negative post. • **Is voltage greater than 10.5 volts?**	Yes ▶ No ▶	REPLACE processor. RECONNECT A/C clutch. RE-EVALUATE symptom. REPLACE WAC relay. REMOVE breakout box. RECONNECT all components. RE-EVALUATE symptom.

Pinpoint Test KM7

TEST STEP		RESULT ▶	ACTION TO TAKE
KM15	NO A/C CUTOUT AT WOT: ENTER OUTPUT STATE CHECK		
	NOTE: **Do not use STAR tester for this Step. Use VOM/DVOM.** • Key off, wait 10 seconds. • Disconnect electrical connector on the speed control servo, if equipped. • Connect DVOM negative test lead to STO at the Self-Test connector and positive test lead to battery positive post. • Jumper STI to SIG RTN at the Self-Test connector. • Perform Key On Engine Off Self-Test until the completion of the Continuous Memory Codes. • DVOM will indicate less than 1.0 volt when test complete. • Depress and release the throttle. • **Does voltage increase to greater than 10.5 volts?**	Yes ▶ No ▶	REMAIN in Output State Check. GO to KM16. DEPRESS throttle to WOT and RELEASE. If STO voltage does not go high, leave equipment hooked up and GO to Pinpoint Test Step QC2.

Pinpoint Test KM15

TEST STEP		RESULT ▶	ACTION TO TAKE
KM16	CHECK FOR VPWR TO RELAY		
	• Still in Output State Check. • Disconnect harness from WAC relay. • Measure voltage between VPWR circuit (IGN RUN for Escort/Tracer) at the WAC relay vehicle harness connector and chassis ground. • **Is voltage greater than 10.5 volts?**	Yes ▶ No ▶	GO to KM17. SERVICE open in VPWR circuit between power relay and WAC relay (for Escort/Tracer, IGN RUN circuit between WAC relay and joint box). RECONNECT all components and REMOVE jumper. RE-EVALUATE symptom.

Pinpoint Test KM16

TEST STEP	RESULT ▶	ACTION TO TAKE
KM17 CHECK FOR WAC CYCLING • Still in Output State Check. • WAC relay disconnected. • DVOM on 20 volt scale. • Connect DVOM positive test lead to the VPWR circuit (IGN RUN for Escort/Tracer) and the negative test lead to the WAC circuit at the WAC relay vehicle harness connector. • While observing DVOM, depress and release throttle several times (to cycle output on and off). • **Does voltage cycle high and low (about one volt change)?**	Yes ▶ No ▶	REPLACE WAC relay. REMOVE jumper. RE-EVALUATE symptom. REMOVE jumper. RECONNECT speed control servo. GO to KM18.

Pinpoint Test KM17

TEST STEP	RESULT ▶	ACTION TO TAKE
KM18 CHECK WAC CIRCUIT CONTINUITY • Key off. • Disconnect processor 60-pin connector. Inspect for damaged or pushed out pins, corrosion, loose wires, etc. Service as necessary. • Install breakout box, leave processor disconnected. • WAC relay disconnected. • Measure resistance between Test Pin 54 at the breakout box and WAC circuit at the WAC relay vehicle harness connector. • **Is resistance less than 5.0 ohms?**	Yes ▶ No ▶	GO to KM19. SERVICE open circuit. REMOVE breakout box. RECONNECT all components. RE-EVALUATE symptom.

Pinpoint Test KM18

TEST STEP	RESULT ▶	ACTION TO TAKE
KM19 CHECK WAC CIRCUIT FOR SHORT TO POWER • Key off. • Breakout box installed, processor disconnected. • WAC relay disconnected. • Key on, engine off. • Measure voltage between Test Pin 54 and chassis ground. • **Is voltage less than 1.0 volt?**	Yes ▶ No ▶	REPLACE processor. RECONNECT WAC relay. RE-EVALUATE symptom. SERVICE short circuit. REMOVE breakout box. RECONNECT all components. RE-EVALUATE symptom. IF symptom is still present, REPLACE processor.

Pinpoint Test KM19

TEST STEP	RESULT ▶	ACTION TO TAKE
KM30 CHECK A/C INPUT CIRCUITRY NOTE: **A low idle with A/C on could be the result of the Powertrain Control Module (PCM) not receiving, or recognizing, the A/C input on Pin 10.** • A/C demand switch to A/C on. • For Escort/Tracer and Probe, turn blower motor switch on lowest speed. • Perform Key On Engine Off Self-Test. • **Is Diagnostic Trouble Code (DTC) 67 or 79/539 present?**	Yes ▶ No ▶	**2.3L Ranger and 4.9L Truck:** GO to KM32. **All others:** The PCM is receiving and recognizing the A/C input on Pin 10. RETURN to diagnotic routines for other possible causes of a low idle. A/C demand switch off. GO to KM31.

Pinpoint Test KM30

TEST STEP		RESULT ▶	ACTION TO TAKE
KM31	CHECK A/C INPUT CIRCUIT		
	• Key off. • Disconnect Powertrain Control Module (PCM). Inspect for damaged or pushed out pins, corrosion, loose wires, etc. Service as necessary. • Install breakout box, leave PCM disconnected. • Key on, engine off. • A/C on. • Measure voltage between Test Pin 10 and Test Pin 40 at the breakout box. • **Is voltage greater than 10.5 volts?**	Yes ▶ No ▶	REPLACE PCM. REMOVE breakout box. RECONNECT all components. RERUN Quick Test. SERVICE open in A/C circuit. REFER to the appropriate wiring diagram. REMOVE breakout box. RECONNECT all components. RERUN Quick Test.

Pinpoint Test KM31

TEST STEP		RESULT ▶	ACTION TO TAKE
KM32	CYCLE A/C DEMAND SWITCH		
	• Key off. • Disconnect Powertrain Control Module (PCM). Inspect for damaged or pushed out pins, corrosion, loose wires, etc. Service as necessary. • Install breakout box, leave PCM disconnected. • DVOM on 20 volt scale. • Key on, engine off. • Connect DVOM positive test lead to Test Pin 43 and negative test lead to Test Pin 40. • **Does voltage cycle high and low when A/C demand switch is cycled?**	Yes ▶ No ▶	The PCM is receiving the A/C inputs on Pin 10 and Pin 43. RETURN to diagnostic routines for other possible causes. SERVICE open in ACD circuit. REMOVE breakout box. RECONNECT all components. RERUN Quick Test.

Pinpoint Test KM32

TEST STEP		RESULT ▶	ACTION TO TAKE
KM40	DIAGNOSTIC TROUBLE CODE (DTC) 67, 79/539: CHECK A/C INPUT		
	DTC 79/539 indicates that the ACCS input to the Powertrain Control Module (PCM) was high during KOEO/KOER Self-Test. DTC 67 indicates that during KOEO Self-Test, voltage was high on NDS (Pin 30) or ACCS (Pin 10) circuit. NOTE: **Before entering this test, verify A/C selector is off (and shift selector is in PARK for AXODE and E4OD vehicles). If A/C was on, turn off and rerun Self-Test. If DTC 67 or 79/539 is present, continue with this test.** • Disconnect Powertrain Control Module (PCM). Inspect for damaged or pushed out pins, corrosion, loose wires, etc. Service as necessary. • Install breakout box, leave PCM disconnected. • Key on, engine off. • Measure voltage between Test Pin 10 at the breakout box and chassis ground. • **Is voltage greater than 1.0 volt?**	Yes ▶ No ▶	VERIFY operation of A/C demand switch. If OK, SERVICE short to power in A/C circuit. REMOVE breakout box. RECONNECT all components. RERUN Quick Test. **For trucks with two-digit DTCs and E4OD transmission:** GO to KM41. **For all others:** REPLACE PCM. REMOVE breakout box. RECONNECT all components. RERUN Quick Test.

Pinpoint Test KM40

TEST STEP		RESULT ▶	ACTION TO TAKE
KM41	CHECK FOR SHORT TO POWER IN PROCESSOR		
	• Key off. • Breakout box installed. • Connect processor to breakout box. • Disconnect A/C clutch. • Key on, engine off. • Measure voltage between Test Pin 10 and Test Pin 40 at the breakout box. • **Is voltage greater than 5.0 volt?**	Yes ▶ No ▶	REPLACE processor. RECONNECT A/C clutch. RERUN Quick Test. GO to Pinpoint Test Step TD1.

Pinpoint Test KM41

TEST STEP		RESULT ▶	ACTION TO TAKE
KM50	NO A/C — ATTEMPT TO GENERATE KOEO DTC 539		
	• Key off. • A/C demand switch to A/C on. • Perform KOEO Self-Test. • **Is KOEO DTC 539 present?**	Yes ▶ No ▶	GO to KM51. GO to KM55.

Pinpoint Test KM50

TEST STEP		RESULT ▶	ACTION TO TAKE
KM51	CHECK FOR B+ VOLTAGE TO A/C RELAY		
	• Key off. • Disconnect A/C relay. • Key on. • Measure voltage between B+ circuit at A/C relay vehicle harness connector and chassis ground. • **Is voltage greater than 10.5 volts?**	Yes ▶ No ▶	Key off. GO to KM52. Key off. VERIFY condition of related fuses. If OK, SERVICE open circuit. RECONNECT all components. RE-EVALUATE symptom.

Pinpoint Test KM51

TEST STEP		RESULT ▶	ACTION TO TAKE
KM52	CHECK POWER TO CLUTCH CIRCUIT CONTINUITY		
	• Key off. • A/C relay disconnected. • A/C clutch disconnected. • Measure resistance between power side of A/C clutch vehicle harness connector and Power-to-Clutch circuit at A/C relay vehicle harness connector. • **Is resistance less than 5.0 ohms?**	Yes ▶ No ▶	GO to KM53. SERVICE open circuit. RECONNECT all components. RE-EVALUATE symptom.

Pinpoint Test KM52

TEST STEP		RESULT ▶	ACTION TO TAKE
KM53	CHECK A/C RELAY		
	• Key off. • A/C clutch disconnected. • Reconnect A/C relay. • Jumper AC ON circuit at A/C relay vehicle harness connector to battery ground. • Key on. • Measure voltage between power side of A/C clutch vehicle harness connector and chassis ground. • **Is voltage greater than 10.5 volts?**	Yes ▶	Key off. REMOVE jumper. EEC system OK. REFER to heating and air conditioning to check for proper ground, open circuit in clutch, mechanical concerns, etc.
		No ▶	REPLACE A/C relay. RECONNECT all components. RE-EVALUATE symptom.

Pinpoint Test KM53

TEST STEP		RESULT ▶	ACTION TO TAKE
KM55	CHECK ACD CIRCUIT CONTINUITY TO LOW PRESSURE (LP) SWITCH		
	• Key off. • A/C demand switch to A/C on. • Disconnect LP switch. • Measure resistance between A/C demand switch side of LP switch vehicle harness connector and chassis ground. • **Is resistance less than 5.0 ohms?**	Yes ▶	GO to KM56.
		No ▶	VERIFY operation of A/C demand switch. REFER to heating and air conditioning If OK, SERVICE open circuit. RECONNECT all components. RE-EVALUATE symptom.

Pinpoint Test KM55

TEST STEP		RESULT ▶	ACTION TO TAKE
KM56	MEASURE RESISTANCE OF LP SWITCH		
	• Key off. • LP switch disconnected. • Measure resistance of LP switch. • **Is resistance less than 5.0 ohms?**	Yes ▶	GO to KM57.
		No ▶	REFER to heating and air conditioning. RECONNECT all components. RE-EVALUATE symptom.

Pinpoint Test KM56

TEST STEP		RESULT ▶	ACTION TO TAKE
KM57	CHECK ACD CIRCUIT CONTINUITY FROM LP SWITCH TO POWERTRAIN CONTROL MODULE (PCM)		
	• Key off. • LP switch disconnected. • Disconnect Powertrain Control Module (PCM). Inspect for damaged or pushed out pins, corrosion, loose wires, etc. Service as necessary. • Install breakout box, leave PCM disconnected. • Measure resistance between Test Pin 23 at the breakout box and PCM side of LP switch vehicle harness connector. • **Is resistance less than 5.0 ohms?**	Yes ▶	REPLACE PCM. REMOVE breakout box. RECONNECT all components. RE-EVALUATE symptom.
		No ▶	SERVICE open circuit. RECONNECT all components. RE-EVALUATE symptom.

Pinpoint Test KM57

TEST STEP		RESULT ▶	ACTION TO TAKE
KM60	DIAGNOSTIC TROUBLE CODE (DTC) 559: CHECK FOR IGN RUN VOLTAGE TO A/C RELAY		
	DTC 559 indicates an A/C relay primary circuit fault. Possible causes: — Open or shorted circuit — Damaged A/C relay — Damaged Powertrain Control Module (PCM) ● Key off. ● Disconnect A/C relay. ● Key on. ● Measure voltage between IGN RUN circuit at A/C relay vehicle harness connector and chassis ground. ● **Is voltage greater than 10.5 volts?** 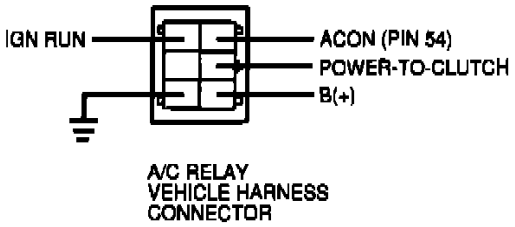 	Yes No	▶ GO to KM61. ▶ VERIFY condition of related fuses. If OK, SERVICE open circuit. RECONNECT all components. RERUN Quick Test.

Pinpoint Test KM60

TEST STEP		RESULT ▶	ACTION TO TAKE
KM61	CHECK A/C RELAY		
	● Key off. ● A/C relay disconnected. ● Check A/C relay coil resistance: — Measure resistance between ACON pin and IGN RUN pin at the A/C relay. — Resistance should be between 60 and 100 ohms. ● Check A/C relay for internal shorts: — Measure resistance between ACON pin and the following pins at the A/C relay; B+, power-to-clutch, ground. — Resistances should be greater than 10,000 ohms. ● **Are all resistance checks OK?** 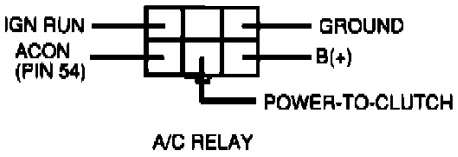 	Yes No	▶ GO to KM62. ▶ REPLACE A/C relay. RECONNECT all components. RERUN Quick Test.

Pinpoint Test KM61

TEST STEP		RESULT ▶	ACTION TO TAKE
KM62	CHECK ACON CIRCUIT FOR SHORT TO POWER		
	• Key off. • A/C relay disconnected. • Disconnect Powertrain Control Module (PCM). Inspect for damaged or pushed out pins, corrosion, loose wire, etc. Service as necessary. • Install breakout box, leave PCM disconnected. • Key on, engine off. • Measure voltage between Test Pin 54 at the breakout box and chassis ground. • **Is voltage less than 1.0 volt?**	Yes ▶ No ▶	GO to KM63. SERVICE short to power. REMOVE breakout box. RECONNECT all components. RERUN Quick Test.

Pinpoint Test KM62

TEST STEP		RESULT ▶	ACTION TO TAKE
KM63	CHECK ACON CIRCUIT FOR SHORT TO GROUND.		
	• Key off. • A/C relay disconnected. • Breakout box installed, PCM disconnected. • Measure resistance between Test Pin 54 at the breakout box and chassis ground. • **Is resistance greater than 10,000 ohms?**	Yes ▶ No ▶	GO to KM64. SERVICE short to ground. REMOVE breakout box. RECONNECT all components. RERUN Quick Test.

Pinpoint Test KM63

TEST STEP		RESULT ▶	ACTION TO TAKE
KM64	CHECK ACON CIRCUIT CONTINUITY		
	• Key off. • A/C relay disconnected. • Breakout box installed, PCM disconnected. • Measure resistance between Test Pin 54 at breakout box and ACON circuit at A/C relay vehicle harness connector. • **Is resistance less than 5.0 ohms?**	Yes ▶ No ▶	REPLACE PCM. REMOVE breakout box, RECONNECT all components. RERUN Quick Test. SERVICE open circuit. REMOVE breakout box. RECONNECT all components. RERUN Quick Test.

Pinpoint Test KM64

TEST STEP		RESULT ▶	ACTION TO TAKE
KM70	SERVICE CODE 539: CHECK A/C INPUT		
	Service Code 539 indicates that the A/C demand input to the processor was low (A/C on) during Self-Test. NOTE: **Before entering this test, verify A/C selector is off. If A/C was on, rerun Quick Test. If Code 539 is present, continue with this test.** • Key off. • A/C off. • Disconnect Low Pressure (LP) switch. • Measure resistance betwen A/C demand switch side of LP switch vehicle harness connector and chassis ground. • **Is resistance greater than 10,000 ohms?**	Yes ▶ No ▶	GO to KM71. VERIFY operation of A/C demand switch. REFER to HEATING VENTILATION AND AIR CONDITIONING. If OK, SERVICE short to ground. RECONNECT all components. RE-EVALUATE symptom.

Pinpoint Test KM70

TEST STEP		RESULT ▶	ACTION TO TAKE
KM71	CHECK LOW PRESSURE (LP) SWITCH		
	• Key off. • LP switch disconnected. • Measure resistance between chassis ground and both pins of LP switch. • **Are both resistances greater than 10,000 ohms?**	Yes ▶ No ▶	GO to KM72. REPLACE LP switch. RECONNECT all components. RE-EVALUATE symptom.

Pinpoint Test KM71

TEST STEP		RESULT ▶	ACTION TO TAKE
KM72	CHECK ACD CIRCUIT TO PROCESSOR FOR SHORT TO GROUND		
	• Key off. • LP switch disconnected. • Disconnect processor 60-pin connector. Inspect for damaged or pushed out pins, corrosion, loose wires, etc. Service as necessary. • Measure resistance between processor side of the LP switch vehicle harness connector and chassis ground. • **Is resistance greater than 10,000 ohms?**	Yes ▶ No ▶	REPLACE processor. RECONNECT all components. RE-EVALUATE symptom. SERVICE short to ground. RECONNECT all components. RE-EVALUATE symptom.

Pinpoint Test KM72

TEST STEP		RESULT ▶	ACTION TO TAKE
KM80	A/C ALWAYS ON: CHECK POWER TO CLUTCH CIRCUIT FOR SHORT TO POWER		
	NOTE: **Before entering this test, verify KOEO DTC 539 or 559 was not received. If DTC 539 or 559 is present, refer to trouble code index for proper Pinpoint Test direction.** • Key off. • Disconnect A/C relay. • Disconnect A/C clutch. • Key on. • Measure voltage between power side of A/C Clutch vehicle harness connector and battery negative post. • **Is voltage less than 1.0 volt?**	Yes ▶ No ▶	GO to KM81. SERVICE short to power. RECONNECT all components. RE-EVALUATE symptom.

Pinpoint Test KM80

TEST STEP		RESULT ▶	ACTION TO TAKE
KM81	CHECK A/C RELAY		
	• Key off. • A/C relay disconnected. • Measure resistance between power-to-clutch pin and both the IGN RUN and B+ pins at the A/C relay. • **Are both resistances greater than 10,000 ohms?** 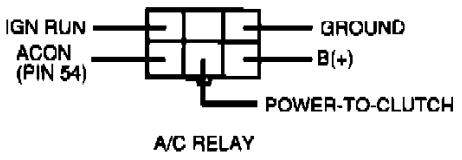 	Yes ▶ No ▶	EEC system OK. REFER to heating and air conditioning. REPLACE A/C relay. RECONNECT all components. RE-EVALUATE symptom.

Pinpoint Test KM81

KN - Testing Notes

1993 Ford Probe L4-121 2.0L DOHC VIN A MFI

NOTE: You should enter this Pinpoint Test only when you have been directed here from Quick Test.

REMEMBER

To prevent the replacement of good components, be aware that the following non-EEC areas may be at fault.

- Damaged fuel pressure regulator
- Damaged Vacuum hoses
- Engine operating hoses
- Base Engine (valves, vacuum leaks, timing, etc.)

This Pinpoint Test is intended to diagnose only the following:

- FPRC solenoid
- Harness Circuits: FPRC, and VPWR
- Processor assembly

DESCRIPTION

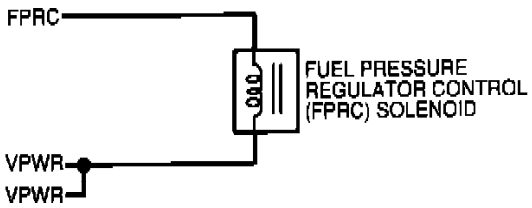

Fuel Pressure Regulator Control Solenoid

The Fuel Pressure Regulator Control **(FPRC)** solenoid controls the vacuum applied to the fuel presure regulator. The FPRC solenoid contains a valve with two ports. One port is connected to manifold vacuum. The second port is connected to the fuel pressure regulator. The FPRC solenoid also has an air filter cap (vent) on it. If the solenoid is energized, then the solenoid valve closes the vacuum path to the second port which leads to the fuel pressure regulator. This results in a higher fuel pressure during crank, idle, neutral and wide open throttle drive modes for a predetermined time and engine temperature. If the solenoid is not energized, then the solenoid valve opens the vacuum path to the second port, allowing manifold vacuum signal to be applied an input to the fuel pressure regulator.

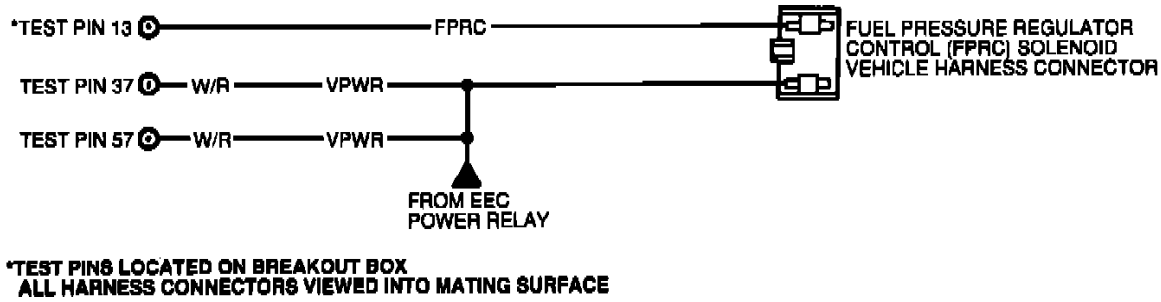

Fuel Pressure Regulator Control Solenoid

TEST STEP		RESULT ▶	ACTION TO TAKE
KN1	KOEO SERVICE CODE 554: ENTER OUTPUT STATE CHECK		
	Service Code 554 indicates a failure in the Fuel Pressure Regulator Control (FPRC) solenoid circuit. Possible causes: — Damaged FPRC solenoid — Damaged vacuum hose(s) — Open in harness — Short (to power or ground) in harness — Damaged processor NOTE: **Do not use STAR Tester for this step. Use a VOM/DVOM.** ● Key off. ● Disconnect electrical connector on the speed control servo, if equipped. ● DVOM on 20 volt scale. ● Connect DVOM negative test lead to STO circuit at Self-Test connector and positive test lead to battery positive. ● Jumper STI circuit to SIG RTN at Self-Test connector. ● Perform Key On Engine Off Self-Test until completion of Continuous Test codes. ● DVOM will indicate less than 1.0 volt when test is completed. ● Depress and release throttle. ● **Does voltage increase?**	Yes ▶ No ▶	REMAIN in Output State Check. GO to KN2. DEPRESS throttle to WOT and RELEASE. If STO voltage does not go high leave equipment hooked up and GO to Pinpoint Test Step QC1.

Pinpoint Test KN1

TEST STEP		RESULT ▶	ACTION TO TAKE
KN2	CHECK FUEL PRESSURE REGULATOR CONTROL SOLENOID ELECTRICAL OPERATION		
	● Key on, engine off. ● Disconnect FPRC solenoid. ● Connect DVOM positive test lead to VPWR pin and negative test lead to FPRC circuit at the FPRC solenoid vehicle harness connector. ● DVOM on 20 volts scale. ● While observing DVOM depress and release throttle several times to cycle solenoid output. ● **Does FPRC solenoid output voltage change greater than 1.0 volt?**	Yes ▶ No ▶	RECONNECT FPRC solenoid. REMOVE jumper. GO to KN3. REMOVE jumper. GO to KN5.

Pinpoint Test KN2

TEST STEP		RESULT ▶	ACTION TO TAKE
KN3	CHECK VACUUM SIGNAL BETWEEN FUEL PRESSURE REGULATOR AND FPRC SOLENOID		
	• Key off. • Disconnect and inspect vacuum hose between fuel pressure regulator and FPRC solenoid for blockage, kinks, etc. Service as necessary. • Start and idle engine for about five minutes to allow it to reach normal operating temperature. • Key off. • Tee in a standard vacuum gauge between fuel pressure regulator and FPRC solenoid. • Start and idle engine while observing vacuum gauge needle. Observe vacuum gauge needle for about five minutes. • **Did vacuum signal appear after about two minutes of engine idle?**	Yes ▶ No ▶	REMOVE vacuum gauge. REFER to FUEL SYSTEM for fuel. Pressure Regulator diagnostics. REMOVE vacuum gauge. GO to KN4.

Pinpoint Test KN3

TEST STEP		RESULT ▶	ACTION TO TAKE
KN4	CHECK VACUUM SIGNAL BETWEEN FPRC SOLENOID AND MANIFOLD VACUUM SOURCE		
	• Key off. • Tee in a standard vacuum gauge between the FPRC solenoid and manifold vacuum source. • Start and idle engine while observing the vacuum gauge needle. • **Was any vacuum signal present?**	Yes ▶ No ▶	REPLACE FPRC solenoid. REMOVE vacuum gauge. RERUN Quick Test and/or VERIFY elimination of drive symptom. REPLACE vacuum hose between FPRC solenoid and source vacuum. REMOVE vacuum gauge. RERUN Quick Test and/or VERIFY elimination of drive symptom.

Pinpoint Test KN4

TEST STEP		RESULT ▶	ACTION TO TAKE
KN5	CHECK FPRC SOLENOID VPWR		
	• Key off. • FPRC solenoid disconnected. • Key on, engine off. • Measure voltge between VPWR at FPRC solenoid vehicle harness connector and battery ground. • **Is voltage greater than 10.5 volts?**	Yes ▶ No ▶	GO to KN6. SERVICE open in VPWR harness circuit. RECONNECT FPRC solenoid. RERUN Quick Test and/or VERIFY elimination of drive symptom.

Pinpoint Test KN5

TEST STEP		RESULT ▶	ACTION TO TAKE
KN6	CHECK FPRC CIRCUIT CONTINUITY • Key off. • FPRC solenoid disconnected. • Disconnect processor 60-pin connector. Inspect for damaged or pushed out pins, corrosion, loose wires, etc. Service as necessary. • Install Breakout Box, leave processor disconnected. • Measure resistance between Test Pin 13 at the Breakout Box and FPRC circuit at solenoid vehicle harness connector. • **Is resistance less and 5.0 ohms?**	Yes ▶ No ▶	GO to KN7. SERVICE open circuit. REMOVE Breakout Box. RECONNECT all components. RERUN Quick Test and / or VERIFY elimination of drive symptom.

Pinpoint Test KN6

TEST STEP		RESULT ▶	ACTION TO TAKE
KN7	CHECK FPRC CIRCUIT FOR SHORT TO POWER AND GROUND • Key off. • FPRC solenoid disconnected. • Breakout Box installed, processor disconnected. • Measure resistance between Test Pin 13 and Test Pins 37 and 57 at the Breakout Box. • Measure resistance between Test Pin 13 and Test Pins 40, 46 and 60 at the Breakout Box. • **Is each resistance greater than 10,000 ohms?**	Yes ▶ No ▶	REPLACE processor. REMOVE Breakout Box. RECONNECT all components. RERUN Quick Test and / or VERIFY elimination of drive symptom. SERVICE short circuit. REMOVE Breakout Box. RECONNECT all components. RERUN Quick Test and / or VERIFY elimination of drive symptom.

Pinpoint Test KN7

KP - Testing Notes

NOTE: You should enter this Pinpoint Test only when you have been directed here from Quick Test.

REMEMBER

This Pinpoint Test is intended to diagnose only the following:

- Harness circuits: SIG RTN, Octane Adjust **(ACT ADJ)**

- Octane shorting bar connector

TEST STEP		RESULT ▶	ACTION TO TAKE
KP1	VISUALLY INSPECT OCTANE ADJUST IN-LINE CONNECTOR SERVICE CODE 57 / 341 Service Code 57 / 341 indicates OCT ADJ shorting bar is not in or the OCT ADJ circuit is open. • Key off. • Visually inspect in-line connector. • **Is shorting bar removed?**	Yes ▶ No ▶	GO to KP2. GO to KP4.

Pinpoint Test KP1

TEST STEP		RESULT ▶	ACTION TO TAKE
KP2	CHECK FOR MODIFICATION DECAL • **Is there a modification decal attached to the vehicle indicating that OCT ADJ shorting bar was removed?**	Yes ▶ No ▶	Testing complete. If vehicle has spark knock concern, Refer to Diagnostic Routines GO to KP3.

Pinpoint Test KP2

TEST STEP		RESULT ▶	ACTION TO TAKE
KP3	CHECK FOR SERVICE CODE 57/341		
	• Replace OCT ADJ short bar. • Key off. • Activate Self-Test. • Key on, engine off. • **Is Service Code 57/341 present?**	Yes ▶ No ▶	GO to KP4. Testing complete. EEC system OK.

Pinpoint Test KP3

TEST STEP		RESULT ▶	ACTION TO TAKE
KP4	CHECK CONTINUITY OF OCTANE ADJUST CIRCUIT		
	NOTE: **There should be continuity from OCT ADJ circuit through the in-line connector and shorting bar to SIG RTN circuit.** • Key off. • Disconnect processor 60-pin connector. Inspect for damaged or pushed out pins, corrosion, loose wires, etc. Service as necessary. • Install breakout box, leave processor disconnected. • Measure resistance between Test Pin 46 and OCT ADJ Test Pin at the breakout box (refer to schematic for appropriate OCT ADJ circuit test pin). • **Is the resistance less than 5.0 ohms?**	Yes ▶ No ▶	REPLACE processor. REMOVE breakout box. RERUN Quick Test. SERVICE open OCT ADJ circuit or shorting bar or SIG RTN circuit. REMOVE breakout box. RERUN Quick Test.

Pinpoint Test KP4

TEST STEP		RESULT ▶	ACTION TO TAKE
KP5	CHECK FOR SERVICE CODE 11		
	• Start engine and idle vehicle at operating temperature. • Key off. • Activate self-test. • Key on, engine off. • **Is Service Code 11 or 111 present?**	Yes ▶ No ▶	GO to KP6. **For Service Code 57/341:** GO to KP1. **For all other codes:** RETURN to Quick Test.

Pinpoint Test KP5

TEST STEP		RESULT ▶	ACTION TO TAKE
KP6	VERIFY IN-LINE CONNECTOR SHORTING BAR IS INSTALLED		
	• Key off. • Visually inspect OCT ADJ in-line connector. • **Is shorting bar installed?**	Yes ▶ No ▶	GO to KP8. GO to KP7.

Pinpoint Test KP6

TEST STEP		RESULT ▶	ACTION TO TAKE
KP7	CHECK FOR MODIFICATION DECAL		
	• **Is there a modification decal attached to vehicle indicating that OCT ADJ shorting bar was removed?**	Yes ▶ No ▶	GO to KP10. REPLACE shorting bar. **Return to Diagnostic Routines to address spark knock concern.**

Pinpoint Test KP7

TEST STEP		RESULT	ACTION TO TAKE
KP8	CHECK FOR TSB		
	• **Is there a Technical Service Bulletin (TSB) authorizing removal of the shorting OCT ADJ bar?**	Yes No	GO to KP9. REFER to DIAGNOSTIC ROUTINES to address spark knock concern.

Pinpoint Test KP8

TEST STEP		RESULT	ACTION TO TAKE
KP9	REMOVE OCT SHORTING BAR		
	• Remove OCT ADJ shorting bar only if there is TSB authorization. • Drive vehicle to verify spark knock. • **Is spark knock present?**		GO to KP10. Testing complete. EEC system OK.

Pinpoint Test KP9

TEST STEP		RESULT	ACTION TO TAKE
KP10	CHECK OCTANE ADJUST CIRCUIT FOR A SHORT TO GROUND		
	• Key off. • Breakout box installed, processor disconnected. • Measure resistance between OCT ADJ circuit at the in-line connector and Test Pin 40, 46 and 60 at the breakout box. • **Is each resistance greater than 10,000 ohms?**	Yes No	GO to KP11. SERVICE short circuit. REMOVE breakout box. If spark knock is still present, REFER to DIAGNOSTIC ROUTINES.

Pinpoint Test KP10

TEST STEP		RESULT	ACTION TO TAKE
KP11	CHECK PROCESSOR INTEGRITY		
	• Key off. • OCT ADJ shorting bar removed because of TSB authorization. • Breakout box installed, processor connected. • Key on. • Measure voltage between OCT ADJ circuit and Test Pin 40/60 at the breakout box. • **Is voltage greater than 4.0 volts?**	Yes No	REMOVE breakout box. If spark knock is still present, REFER to DIAGNOSTIC ROUTINES. REPLACE processor. REMOVE Breakout box. If spark knock is still present, REFER to DIAGNOSTIC ROUTINES.

Pinpoint Test KP11

M - Testing Notes

NOTE: You should enter this Pinpoint Test only when you have been directed here from Quick Test.

REMEMBER

This Pinpoint Test is intended to diagnose only the following:

- Throttle movement (greater than 3/4 throttle)

- RPM increases (greater than 2000 rpm)

TEST STEP		RESULT ▶	ACTION TO TAKE
M1	SERVICE CODE 77 / 538: SYSTEM FAILED TO RECOGNIZE BRIEF WOT		
	NOTE: A brief snap of the throttle may not be sufficient to pass this test. Be sure to go to WOT and return. ● Rerun Engine Running Self-Test. Be sure operator is familiar with the Engine Running format which proceeds as follows: — Activate Self-Test. — Start engine. — ID Code start of test. — Dynamic Response code 1 (0); perform brief WOT. — Testing over. — Service code output begins. ● **Is Code 77 or 538 still present?**	Yes ▶ No ▶	GO to M2. Dynamic Response Test passed. SERVICE any other service code(s) received as necessary.

Pinpoint Test M1

TEST STEP		RESULT ▶	ACTION TO TAKE
M2	DID ENGINE ACHIEVE GREATER THAN 2000 RPM		
	● **During the WOT in the Dynamic Response Test, did the engine achieve greater than 2000 rpm?**	Yes ▶ No ▶	REPLACE processor. RERUN Quick Test. CHECK for conditions that would prevent engine from achieving greater than 2000 rpm REFER to to DIAGNOSTIC ROUTINES for other possible causes of the vehicle's driveability symptoms.

Pinpoint Test M2

ML - Testing Notes

NOTE: You should enter this Pinpoint Test only when you have been directed here from Quick Test or Pinpoint Test QA.

REMEMBER

To prevent the replacement of good components, be aware that the following non-EEC areas may be at fault.

- Fuse, bulb or socket.

This Pinpoint Test is intended to diagnose only the following:

- STO/MIL Circuit

- Processor assembly

DESCRIPTION

The Malfunction Indicator Light (MIL) is intended to alert the driver at certain malfunctions in the EEC-IV system. The MIL output is turned on when the strategy detects a fault in input/output circuits. The light will remain on as long as fault causing it is present. Regulations governing this light also require that the Self-Test codes be displayed by the flashing of this light.

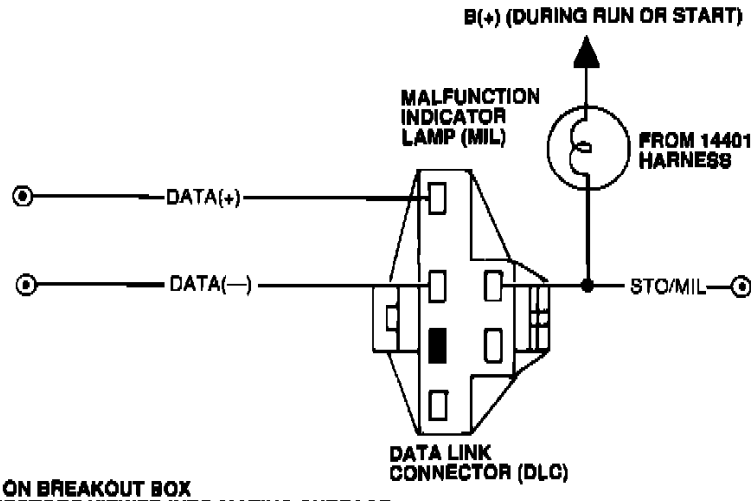

*TEST PINS LOCATED ON BREAKOUT BOX
ALL HARNESS CONNECTORS VIEWED INTO MATING SURFACE

Test Pin 17—STO/MIL

Application	Wire Color
2.3L OHC MFI 3.8L SFI, Continental 4.6L SFI, Town Car 5.0L SFI-MA, Mustang	PK/LG
2.0L SFI-MA, Probe	LG/R
1.9L SFI-MA, Escort/Tracer 3.8L SFI-MA, Thunderbird/Cougar 5.0L SFI-MA, Thunderbird/Cougar 7.0L MFI F-Series	Y/BK
2.3L SFI Tempo/Topaz 3.0L SFI Tempo/Topaz 3.0L SFI SHO Taurus 3.2L SFI SHO Taurus 3.0L SFI Taurus FF 3.8L SFI Taurus/Sable 3.0L SFI Taurus/Sable 4.6L SFI Crown Victoria/Grand Marquis 5.0L SFI Mustang	T/R
All Others	PK/LG

Schematic Diagram

DATA(+)

Application	Pin Number	Wire Color
1.9L SFI-MA Escort/Tracer	28	Y/BL
7.0L MFI F-Series	28	O/BK
2.3L MFI OHC Ranger 2.3L MFI OHC Mustang 4.0L MFI Aerostar 4.0L MFI Ranger/Explorer (49 States) 4.9L MFI E/F-Series/Bronco 5.0L MFI F-Series/Bronco (E4OD) 5.8L MFI E/F-Series/Bronco 7.5L MFI E/F-Series	28	T/O
All Others	18	T/O

DATA(-)

Application	Pin Number	Wire Color
1.9L SFI-MA Escort/Tracer	8	Y/GR
3.2L SFI-MA Taurus SHO	19	BK/O
7.0L MFI F-Series	9	BK/O
2.3L MFI OHC Mustang 2.3L MFI OHC Ranger 4.0L MFI Aerostar 4.0L MFI Ranger/Explorer (49 States) 4.9L MFI E/F-Series/Bronco 5.0L MFI F-Series/Bronco (E4OD) 5.8L MFI E/F-Series/Bronco 7.5L MFI E/F-Series	9	PK/LB
All Others	19	PK/LB

Schematic Diagram

	TEST STEP	RESULT ▶	ACTION TO TAKE
ML1	MALFUNCTION INDICATOR LIGHT (MIL) ALWAYS ON: CHECK STO/MIL CIRCUIT FOR SHORTS TO GROUND		
	NOTE: **If vehicle will not start perform Pinpoint Test Step AA1 if equipped with TFI, AB1 if equipped with DIS and AC1 if EDIS equipped.** • **If any Key On Engine Off service codes or Continuous Memory Codes are present, service before proceeding. If no codes are output, continue with this Test Step.** • Key off. • Disconnect processor 60 pin connector. Inspect for damaged or pushed out pins, corrosion, loose wires, etc. Service as necessary. • Install Breakout Box, leave processor disconnected. • Measure resistance between Test Pin 17 and Test Pin 40 at the Breakout Box. • **Is resistance less than 5.0 ohms?**	Yes ▶ No ▶	SERVICE short circuit between Test Pin 17 and Malfunction Indicator Light (MIL), or between Test Pin 17 and the Self-Test Connector. REMOVE Breakout Box. RECONNECT processor. RERUN Quick Test. REPLACE processor. REMOVE Breakout Box. RERUN Quick Test.

Pinpoint Test ML1

TEST STEP		RESULT ▶	ACTION TO TAKE
ML4	MALFUNCTION INDICATOR LIGHT (MIL) NEVER ON: CHECK FOR VBAT AT MIL FUSE (GROUND SIDE)		
	NOTE: **If vehicle will not start go to Pinpoint Test Step AA1 if equipped with TFI, AB1 if equipped with DIS and AC1 if EDIS equipped.** • **If vehicle has electronic instrument cluster, refer to Body Electrical for Check Engine Light diagnostic procedures.** • Key on, engine off. • Measure voltage from battery negative post to "Ground" side of the MIL fuse. • **Is voltage greater than 10.5 volts?**	Yes ▶ No ▶	GO to ML6. GO to ML5.

Pinpoint Test ML4

TEST STEP		RESULT ▶	ACTION TO TAKE
ML5	CHECK FOR VBAT AT MIL FUSE (VBAT SIDE)		
	• Key on, engine off. • Measure voltage from battery negative post to "VBAT" side of the MIL fuse. • **Is voltage greater than 10.5 volts?**	Yes ▶ No ▶	REPLACE the MIL fuse. VERIFY service by turning ignition key to the RUN position. SERVICE open in the MIL / VBAT circuit. VERIFY service by turning ignition key to the RUN position.

Pinpoint Test ML5

TEST STEP		RESULT ▶	ACTION TO TAKE
ML6	CHECK FOR VBAT AT MIL BULB / SOCKET (VBAT SIDE)		
	• Key on, engine off. • Measure voltage from battery negative post to VBAT side of MIL bulb / socket. • **Is voltage greater than 10.5 volts?**	Yes ▶ No ▶	GO to ML7. SERVICE open between MIL fuse and MIL bulb. VERIFY service by turning ignition key to RUN position.

Pinpoint Test ML6

TEST STEP		RESULT ▶	ACTION TO TAKE
ML7	CHECK MIL BULB RESPONSE TO GROUNDING		
	• Key off. • Attach one end of jumper wire to battery negative post or chassis ground. • Attach other end of jumper wire to ground side of the MIL bulb / socket. • Turn ignition key to RUN position. • **Is the MIL on?**	Yes ▶ No ▶	Turn ignition key to the OFF position. Remove jumper wire. GO to ML8. Turn ignition key to OFF position. REMOVE jumper wire. REPLACE MIL bulb / socket. VERIFY service by turning ignition key to RUN position.

Pinpoint Test ML7

TEST STEP	RESULT ▶	ACTION TO TAKE
ML8 CHECK MIL CIRCUIT CONTINUITY		
• Key off. • Disconnect processor 60 pin connector. Inspect for damaged or pushed out pins, corrosion, loose wires, etc. Service as necessary. • Install breakout box, leave processor disconnected. • Measure resistance between Test Pin 17 at breakout box and MIL. • **Is resistance less than 5.0 ohms?**	Yes ▶ No ▶	REPLACE processor. REMOVE Breakout Box. VERIFY the service by turning the ignition key to the RUN position. SERVICE open in the MIL circuit. REMOVE breakout box. RECONNECT processor. VERIFY service by turning ignition key to RUN position.

Pinpoint Test ML8

TEST STEP	RESULT ▶	ACTION TO TAKE
ML10 MALFUNCTION INDICATOR LIGHT (MIL) INTERMITTENTLY ON: CHECK FOR INTERMITTENT STO SHORT TO GROUND		
NOTE: **If vehicle will not start go to Pinpoint Test Step AA1 if equipped with TFI, AB1 if equipped with DIS and AC1 if EDIS equipped. The MIL will come ON when there is a Continuous Memory Code present. Service any Continuous Memory Codes before proceeding.** If no codes are output, continue with this Test Step. • Enter Key On Engine Off Continuous Monitor Mode. • Observe VOM or STAR LED for indication of a fault while you wiggle, shake or bend a small section of the EEC-IV system harness in the following locations: — Harness closest to Self-Test connector to the dash panel — Dash panel to the processor — Dash panel to the MIL • **Is a fault indicated?**	Yes ▶ No ▶	SERVICE short to ground. RERUN Quick Test. UNABLE to duplicate fault at this time. If the MIL flashed on intermittently with pass codes (11-10-11 or 111-10-111), then testing is complete. The fault occurred over 40/80 warm-up cycles ago. Error codes are not stored in memory beyond 40/80 warm-up cycles.

Pinpoint Test ML10

TEST STEP	RESULT ▶	ACTION TO TAKE
ML15 MALFUNCTION INDICATOR LIGHT (MIL) FLASHING WITH ERRATIC IDLE: CHECK FOR STI SHORT TO GROUND		
NOTE: **Vehicle symptoms indicate that STI is grounded and the vehicle is actually performing Self-Test without a tester installed.** • Key off. • Disconnect processor 60 pin connector. Inspect for damaged or pushed out pins, corrosion, loose wires, etc. Service as necessary. • Measure resistance between the Self-Test Input (STI) connector and engine block ground. • **Is resistance less than 10,000 ohms?**	Yes ▶ No ▶	SERVICE short circuit. RECONNECT processor. VERIFY symptom eliminated. RECONNECT processor. VERIFY symptom eliminated. REFER to DIAGNOSTIC ROUTINES for rough idle routines.

Pinpoint Test ML15

TEST STEP		RESULT	ACTION TO TAKE
ML20	"CHECK ENGINE" MESSAGE DISPLAYED		
	NOTE: **If vehicle will not start go to Pinpoint Test Step AA1 if equipped with TFI, AB1 if equipped with DIS and AC1 if EDIS equipped.**	Yes	GO to DCL diagnosis.
	• Run Key On Engine Off Self-Test. • **Is result 11-10-11 or 111-10-111 (Pass Codes)?**	No	Self-Test indicates a fault. GO to Quick Test. START with the first code displayed.

Pinpoint Test ML20

TEST STEP		RESULT	ACTION TO TAKE
ML25	CONTINUOUS MEMORY CODE 529, "CHECK ENGINE"/"CHECK DCL" MESSAGE DISPLAYED		
	Continuous Memory Codes 529 and 533 indicate that a circuit failure has occurred on the Data Communications Link (DCL). These codes can appear alone or in conjunction with one another. The messages "CHECK ENGINE" and/or "CHECK DCL" will also be on. — Code 529 indicates an EEC IV processor or Data Communicator Link (DCL) circuit failure. — Code 533 indicates a Data Communication Link to Electronic Instrument Cluster circuit failure.	Yes	REFER to DCL diagnosis.
		No	Self-Test indicates a fault. GO to Quick Test. START with the first code displayed.
	NOTE: **If vehicle will not start go to Pinpoint Test Step AA1 if equipped with TFI, AB1 if equipped with DIS and AC1 if EDIS equipped.**		
	• Clear Continuous Memory • **Wait five minutes.** • Rerun Key On Engine Off Self-Test with a STAR tester or volt/ohmmeter. • **Is result 11-10-11 or 111-10-111 (Pass Codes)?**		

Pinpoint Test ML25

NA - Testing Notes

NOTE: You should enter this Pinpoint Test only when you have been directed here from Quick Test or Ignition System.

REMEMBER

To prevent the replacement of good components, be aware that the following non-EEC areas may be at fault.

- TFI
- Ignition coil
- Spark plugs and high tension cables
- Distributor
- Arcing of secondary ignition components

This Pinpoint Test is intended to diagnose only the following:

- Harness circuits: IDM
- Processor assembly

DESCRIPTION

The Ignition Diagnostic Monitor is an input to the processor that verifies spark function based on the flyback voltage created by the ignition coil primary discharge, otherwise known as TACH. This signal is transmitted from the TFI module to the processor. The IDM signal consists of a single pulse for each successful ignition event. Lack of an indication of intermittent and/or missing spark events.

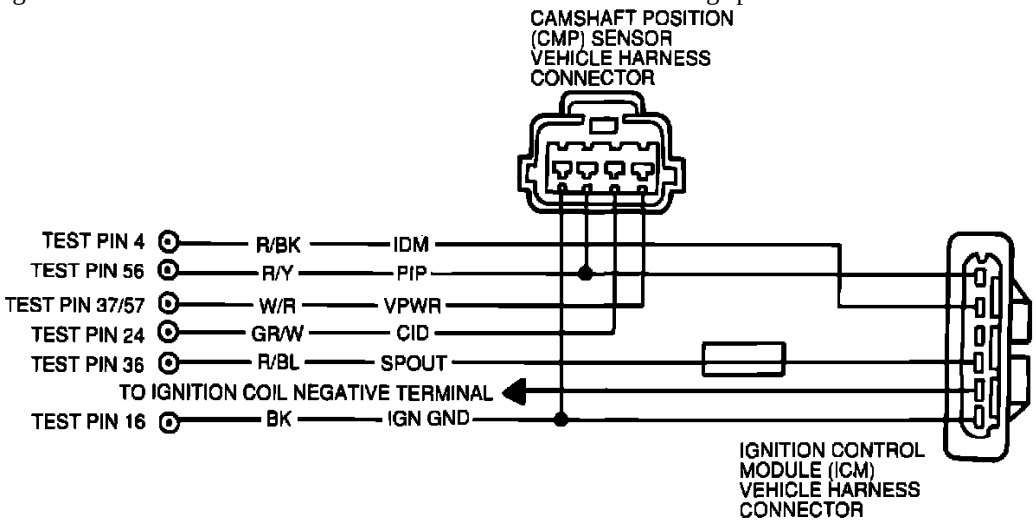

Schematic Diagram

	TEST STEP	RESULT ▶	ACTION TO TAKE
NA1	CONTINUOUS MEMORY DIAGNOSTIC TROUBLE CODE (DTC) 14/211: ERRATIC IGNITION		
	DTC 14/211 indicates two successive erratic Profile Ignition Pickup (PIP) pulses occurred, resulting in a possible engine miss or stall. Possible causes: — Loose wires/connectors. — Arcing secondary ignition components (coil, cap, rotor, wires, plugs, etc.). — On-board transmitter (2-way radio).* ● Verify all radio and condenser installations. Carefully follow manufacturer's installation instructions regarding the routing of antenna and power leads. ● **Are any of the above present?**	Yes ▶ No ▶	SERVICE as necessary. CLEAR Continuous Memory RERUN Quick Test. **For No Starts on 2.0L Probe:** GO to AA1. **For all other No Starts:** REFER to ignition system for DI diagnostics. **All others:** GO to NA2.

Pinpoint Test NA1

	TEST STEP	RESULT ▶	ACTION TO TAKE
NA2	CONTINUOUS MEMORY DIAGNOSTIC TROUBLE CODE (DTC) 18/212		
	DTC 18/212 indicates a loss of IDM input to the PCM. Possible Causes: — Open harness circuit. — Shorted harness circuit. — Damaged Ignition Control Module (ICM). — Damaged Powertrain Control Module (PCM). ● **Is vehicle a No Start?**	Yes ▶ No ▶	REFER to ignition system for DI Diagnostics. **For vehicles with Computer Control Dwell (refer to Pinpoint Test Schematic):** GO to NA3. **For all others:** GO to NA4.

Pinpoint Test NA2

TEST STEP		RESULT ▶	ACTION TO TAKE
NA3	CONTINUOUS MEMORY DIAGNOSTIC TROUBLE CODE (DTC) 18/212: CHECK IDM CIRCUIT CONTINUITY		
	• Key off. • Disconnect Powertrain Control Module (PCM). Inspect for damaged or pushed out pins, corrosion, loose wires, etc. Service as necessary. • Install breakout box, leave PCM disconnected. • Disconnect Ignition Control Module (ICM). • Measure resistance between Test Pin 4 at the breakout box and IDM circuit at the ICM vehicle harness connector. • **Is resistance less than 5.0 ohms?**	Yes ▶ No ▶	GO to NA5. SERVICE open circuit. REMOVE breakout box. RECONNECT PCM. CLEAR Continuous Memory. RECONNECT all components. RERUN Quick Test.

Pinpoint Test NA3

TEST STEP		RESULT ▶	ACTION TO TAKE
NA4	CONTINUOUS MEMORY DIAGNOSTIC TROUBLE CODE (DTC) 18/212: CHECK IDM CIRCUIT CONTINUITY		
	• Key off. • Disconnect Powertrain Control Module (PCM). Inspect for damaged or pushed out pins, corrosion, loose wires, etc. Service as necessary. • Install breakout box, leave PCM disconnected. • Disconnect ignition coil and Ignition Control Module (ICM). • Measure resistance between Test Pin 4 at the breakout box and IDM circuit at ICM vehicle harness connector. • **Is resistance between 20,000 and 24,000 ohms?**	Yes ▶ No ▶	GO to NA5. SERVICE open circuit. REMOVE breakout box. RECONNECT PCM. CLEAR Continuous Memory. RECONNECT all components. RERUN Quick Test.

Pinpoint Test NA4

TEST STEP		RESULT ▶	ACTION TO TAKE
NA5	CHECK IDM CIRCUIT FOR SHORTS TO POWER (EXCLUDING VREF)		
	• Key off. • Breakout box installed. • PCM and ICM disconnected. • Measure voltage between Test Pin 4 at the breakout box and battery negative post. • Key on, engine off. • Measure voltage between Test Pin 4 and Test Pins 40 and 60 at the breakout box. • **Is any voltage reading greater than 10.5 volts?**	Yes ▶ No ▶	SERVICE short circuit. REMOVE breakout box. RECONNECT all components. RERUN Quick Test. GO to NA6.

Pinpoint Test NA5

TEST STEP		RESULT ▶	ACTION TO TAKE
NA6	CHECK IDM CIRCUIT FOR SHORTS TO VREF AND PIP		
	• Key off. • Breakout box installed, PCM disconnected. • ICM disconnected. • Ignition coil disconnected on Non-CCD vehicles (refer to Pinpoint Test Schematic). • Disconnect Scan Tool from Data Link Connector (if applicable). NOTE: **For proper results of this test, the Scan Tool must be disconnected. Due to the circuitry of the Scan Tool and the vehicle, voltage can be fed to the VREF circuit giving the false indication of a short to power.** **For Shorts To VREF:** — Measure resistance between Test Pin 4 and Test Pin 26 at the breakout box. **For Shorts To PIP circuit:** — Measure resistance between Test Pin 4 and Test Pin 56 at the breakout box. • **Is each resistance greater than 10,000 ohms?**	Yes ▶ No ▶	RECONNECT Scan Tool. GO to NA7. SERVICE short circuits. REMOVE breakout box. RECONNECT all components and SCAN Tool (if applicable). RERUN Quick Test.

Pinpoint Test NA6

TEST STEP		RESULT ▶	ACTION TO TAKE
NA7	CHECK IDM CIRCUIT FOR SHORT TO GROUND		
	NOTE: **During this check when 4-wire HO2S is connected to the vehicle harness on DI vehicles, a short to SIG RTN (Pin 46) may be indicated in conjunction with an actual PWR GND short.** • Key off. • Breakout box installed, PCM disconnected. • ICM disconnected. • Ignition coil disconnected on Non-CCD vehicles (refer to Pinpoint Test Schematic). • Measure resistance between Test Pin 4 and Test Pins 20, 40, 46 and 60 at the breakout box. • **Is each resistance above 10,000 ohms?**	Yes ▶ No ▶	GO to NA8. REMOVE breakout box. SERVICE short to ground in IDM circuit. RECONNECT all components. CLEAR Continuous Memory. RERUN Quick Test.

Pinpoint Test NA7

TEST STEP		RESULT ▶	ACTION TO TAKE
NA8	CHECK ICM		
	• Key off. • Breakout box installed. • Connect PCM to breakout box. • Reconnect ignition coil and ICM. • Connect DVOM between Test Pin 4 and Test Pin 16 at the breakout box. • Start engine. • Observe DVOM when voltage is allowed to stabilize. • Lightly tap on ICM to simulate road shock. • Wiggle ICM connector (for 3.8L AXODE, 3.8L RWD, 5.0L Thunderbird/Cougar; 3.0L, 7.0L and 7.5L Trucks, wiggle ICM, GCM and CMP sensor connectors). • A sudden change in voltage indicates a fault. • **Is a fault indicated?**	Yes ▶ No ▶	DISCONNECT and INSPECT connectors. If connector and terminals are good, REMOVE breakout box, RECONNECT all components and REFER to ignition system GO to NA9.

Pinpoint Test NA8

TEST STEP		RESULT ▶	ACTION TO TAKE
NA9	CHECK EEC HARNESS		
	• DVOM still connected between Test Pin 4 and Test Pin 16 at the breakout box. • Key on, engine running. • While observing a voltage change like in NA7, perform the following: — Grasp vehicle harness closest to ICM connector (for 3.8L AXODE, 3.8L RWD, 5.0L Thunderbird/Cougar; 3.0L, 7.0L and 7.5L Trucks, wiggle ICM, GCM and CMP sensor connectors). Shake and bend a small section of the EEC harness while working your way to the dash panel. Also wiggle, shake and bend the EEC harness from dash panel to PCM. • **Is a fault indicated?**	Yes No	ISOLATE fault and SERVICE as necessary. REMOVE breakout box. RECONNECT all components. CLEAR Continuous Memory. RERUN Quick Test. GO to NA10.

Pinpoint Test NA9

TEST STEP		RESULT ▶	ACTION TO TAKE
NA10	CHECK PCM AND HARNESS CONNECTORS		
	• Key off. • Disconnect Powertrain Control Module (PCM). Inspect for damaged or pushed out pins, corrosion, loose wires, etc. • **Are connectors and terminals OK?**	Yes No	GO to NA11. SERVICE as necessary. REMOVE breakout box. RECONNECT all components. CLEAR Continuous Memory. RERUN Quick Test.

Pinpoint Test NA10

TEST STEP		RESULT ▶	ACTION TO TAKE
NA11	CHECK PCM FOR SHORT TO POWER		
	• Key off. • Breakout box installed. • PCM connected to breakout box. **For vehicles with Remote Mounted ICM and Camshaft Position (CMP) sensor:** — Disconnect ICM and CMP. **For 7.0L Truck:** — Disconnect Governor Control Module (GCM). **For 2.0L Probe:** — Disconnect Camshaft Position (CMP) sensor. **For all others:** — Disconnect ICM. • Measure voltage between Test Pin 4 and chassis ground. • Key on, engine off. • Measure voltage between Test Pin 4 and Test Pins 40 and 60 at the breakout box. • **Is any voltage reading greater than 10.5 volts?**	Yes No	REPLACE PCM. REMOVE breakout box. RECONNECT all components. RERUN Quick Test. GO to NA12.

Pinpoint Test NA11

TEST STEP		RESULT ▶	ACTION TO TAKE
NA12	CHECK PCM FOR SHORT TO GROUND ● Key off. ● Breakout box installed. ● PCM connected to breakout box. ● Ignition coil (Non-CCD only), ICM and CMP sensor disconnected. ● Measure resistance between Test Pin 4 and Test Pins 40, 46 and 60 at breakout box. ● **Is each resistance greater than 10,000 ohms?**	Yes ▶ No ▶	REMOVE breakout box. RECONNECT all components. For further diagnosis, REFER to ignition system REPLACE PCM. REMOVE breakout box. RECONNECT all components. RERUN Quick Test.

Pinpoint Test NA12

PA - Testing Notes

NOTE: You should enter this Pinpoint Test only when checking computed timing, or you have been directed here from Quick Test.

REMEMBER

To prevent the replacement of good components, be aware that the following non-EEC areas may be at fault.

- Base engine

- Distributor

- TFI module

This Pinpoint Test is intended to diagnose only the following:

- Harness circuit: SPOUT

- Base timing

- Processor assembly

DESCRIPTION

The Spark Output (SPOUT) is a digital signal generated by the EEC-IV module which supplies desired spark timing and, in some instances dwell information to the module. Normally there will be one and only one SPOUT pulse for each PIP period.

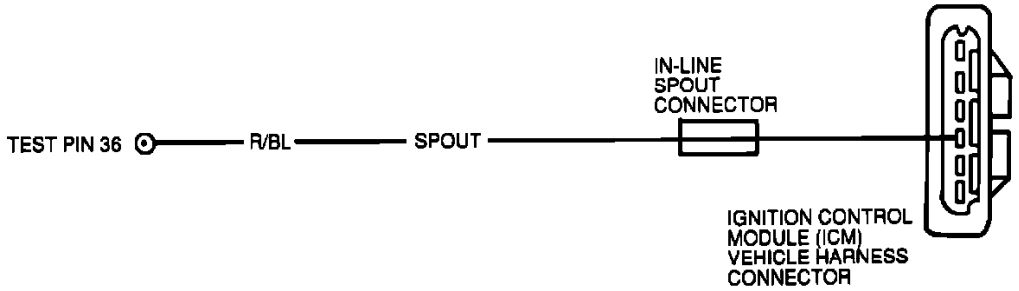

Schematic Diagram

TEST STEP		RESULT ▶	ACTION TO TAKE
PA1	CHECK FOR POWER TO PROCESSOR		
	NOTE: **Before proceding with this Pinpoint Test, verify that the base timing check in Quick Test Step has been performed.** ● Key off. ● Disconnect processor 60 pin connector. Inspect for damaged or pushed out pins, corrosion, loose wires, etc. Service as necessary. ● Install breakout box, leave processor disconnected. ● Key on, engine off. ● Measure voltage between Test Pin 37 and Test Pin 40 at the breakout box. ● Measure voltage between Test Pin 57 and Test Pin 60 at the breakout box. ● **Is each voltage greater than 10.5 volts?**	Yes ▶ No ▶	GO to PA2. **For Tempo/Topaz, Taurus/Sable, Continental:** GO to Pinpoint Test Step X1. **For all others:** GO to Pinpoint Test Step B1.

Pinpoint Test PA1

TEST STEP		RESULT ▶	ACTION TO TAKE
PA2	CHECK SPOUT CIRCUIT CONTINUITY		
	● Key off. ● Breakout box installed, processor disconnected. ● Disconnect TFI module. ● Measure resistance between Test Pin 36 at the breakout box and SPOUT circuit at the TFI module vehicle harness connector. ● **Is resistance less than 5.0 ohms?** 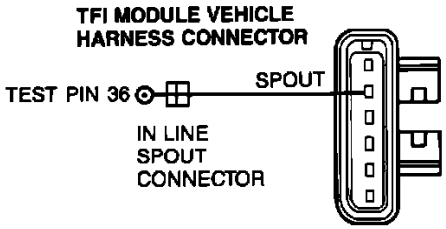 	Yes ▶ No ▶	GO to PA3. SERVICE open circuit. REMOVE breakout box. RECONNECT all components. CHECK timing.

Pinpoint Test PA2

TEST STEP		RESULT ▶	ACTION TO TAKE
PA3	CHECK SPOUT CIRCUIT FOR SHORT TO B+ (EXCLUDING VREF)		
	● Key off. ● Breakout box installed, PCM disconnected. ● ICM disconnected. ● Key on, engine off. ● Measure voltage between Test Pin 36 and Test Pin 40 or 60 at the breakout box. ● **Is voltage reading greater than 10.5 volts?**	Yes ▶ No ▶	SERVICE short circuit. REMOVE breakout box. RECONNECT all components. RERUN Quick Test. GO to PA4.

Pinpoint Test PA3

TEST STEP		RESULT	ACTION TO TAKE
PA4	CHECK SPOUT CIRCUIT FOR SHORT TO VREF, GROUND AND PIP		
	• Key off. • Breakout box installed, PCM disconnected. • ICM disconnected. **For Short to VREF:** — Measure resistance between Test Pin 36 and Test Pin 26 at the breakout box. **For Short to Ground:** — Measure resistance between Test Pin 36 and Test Pins 16, 20, 40, 46 and 60 at the breakout box. **For Short to PIP:** — Measure resistance between Test Pin 36 and Test Pin 56 at the breakout box. • **Is each resistance greater than 10,000 ohms?**	Yes ▶	RECONNECT all components. GO to ignition system
		No ▶	SERVICE short circuit. REMOVE breakout box. RECONNECT all components. RERUN Quick Test.

Pinpoint Test PA4

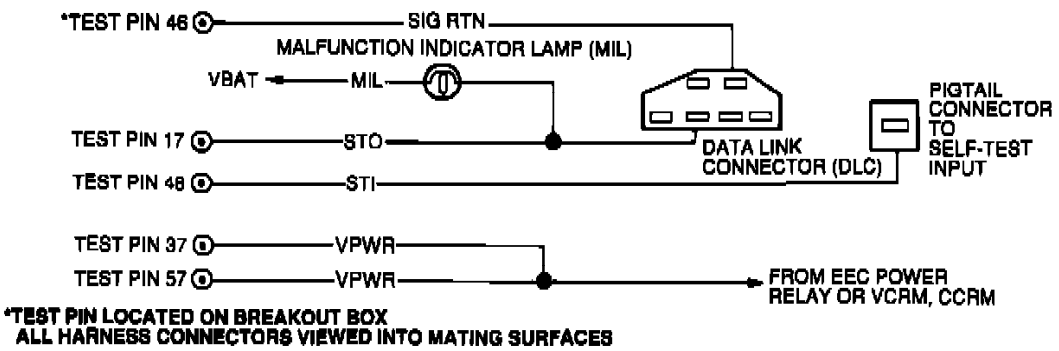

Test Pin 17—STO and MIL

Application	Wire Color
Car: Escort/Tracer Thunderbird/Cougar	Y/BK
2.0L Probe	LG/R
Tempo/Topaz Taurus/Sable Crown Victoria/Grand Marquis	T/R
Truck: Aerostar	T/R
7.0L F-Series	Y/BK
All Other Car and Truck	PK/LG

Test Pin 48—STI

Application	Wire Color
Car: Escort/Tracer	LG/Y
2.0L Probe	BL/W
Taurus/Sable	BR
Truck: Aerostar	W/R
7.0L F-Series	BK/R
All Other Car and Truck	W/P

Test Pin 46 — SIG RTN

Application	Wire Color
Car: Escort/Tracer	LG/BK
2.0L Probe	BK/BL
Truck: 7.0L F-Series	BK/W
All Other Car and Truck	GY/R

Test Pin 37/57—VPWR

Application	Wire Color
Escort/Tracer 2.0L Probe	W/R
All Other Car and Truck	R

Schematic Diagram

QA - Testing Notes

NOTE: You should enter this Pinpoint Test only when you have been directed here from Quick Test.

REMEMBER

This Pinpoint Test is intended to diagnose only the following:

- Harness circuit: SIG RTN, STO, VPWR, VREF, and HEGO

- EEC Power Relay or IRCM

- Processor

TEST STEP		RESULT ▶	ACTION TO TAKE
QA1	CHECK VREF VOLTAGE AT SELF-TEST CONNECTOR		
	NOTE: **Aftermarket devices such as an alarm system may cause Self-Test to abort if wiring is connected to certain EEC components. PRIOR TO SERVICING VEHICLE, inform customer that disconnection of the device is necessary for the proper diagnosis and function of the EEC system. Restore EEC system to original configuration before proceeding with this Pinpoint Test.** If using a STAR Tester to run Self-Test, verify that correct procedure is used for your application. ● Key off. ● Disconnect processor 60 pin connector. Inspect for damaged or pushed out pins, corrosion, loose wires, etc. Service as necessary. ● Install breakout box and connect processor to breakout box. ● Key on, engine off. ● Measure voltage between Test Pin 26 at the breakout box and SIG RTN circuit in the Self-Test connector. ● **Is voltage between 4.0 and 6.0 volts?**	Yes No	▶ GO to QA3. ▶ GO to QA2.

Pinpoint Test QA1

TEST STEP		RESULT ▶	ACTION TO TAKE
QA2	CHECK SIG RTN CIRCUIT CONTINUITY		
	● Key off. ● Breakout box installed, processor disconnected. ● Measure resistance between SIG RTN circuit in the Self-Test connector and Test Pin 46 at the breakout box. ● **Is resistance less than 5.0 ohms?**	Yes No	▶ GO to Pinpoint Test Step C1. ▶ SERVICE open circuit. RECONNECT processor. RERUN Quick Test.

Pinpoint Test QA2

TEST STEP		RESULT ▶	ACTION TO TAKE
QA3	CHECK STI CIRCUIT CONTINUITY		
	● Key off. ● Breakout box installed. ● Disconnect processor. ● Measure resistance between STI circuit in the Self-Test single pin pigtail connector and Test Pin 46 at the breakout box. ● **Is resistance less than 5.0 ohms?**	Yes No	▶ GO to QA4. ▶ SERVICE open circuit. REMOVE breakout box. RECONNECT processor. RERUN Quick Test.

Pinpoint Test QA3

TEST STEP		RESULT ▶	ACTION TO TAKE
QA4	CHECK STO CIRCUIT CONTINUITY		
	• Key off. • Breakout box installed, processor disconnected. • Measure resistance between STO circuit in the Self-Test connector and Test Pin 17 at the breakout box. • **Is resistance less than 5.0 ohms?**	Yes ▶ No ▶	**For 7.3L Diesel:** GO to QA7. **For all others:** GO to QA5. SERVICE open circuit. REMOVE breakout box. RECONNECT processor. RERUN Quick Test.

Pinpoint Test QA4

TEST STEP		RESULT ▶	ACTION TO TAKE
QA5	CHECK HO2S SIGNAL FOR SHORT TO POWER		
	NOTE: **Due to the internal circuitry of the PCM, a right/rear HO2S signal short to power could cause EEC strategy NOT to enter on-demand Self-Test.** • Breakout box installed, PCM disconnected. • Key on, engine off. • Measure voltage between HO2S signal Test Pin 29 or 44 (refer to Pinpoint Test HB schematic for flexible fuel vehicles, Pinpoint Test H schematic for all other vehicles) and Test Pin 40 or 60 at the breakout box. • **Is voltage greater than 2.0 volts?**	Yes ▶ No ▶	GO to QA6. GO to QA7.

Pinpoint Test QA5

TEST STEP		RESULT ▶	ACTION TO TAKE
QA6	ISOLATE SHORT TO HARNESS OR HO2S		
	• Breakout box installed, PCM disconnected. • Disconnect right/rear HO2S. • Key on, engine off. • Measure voltage between HO2S signal Test Pin 29 or 44 (refer to Pinpoint Test HB schematic for flexible fuel vehicles, Pinpoint Test H schematic for all other vehicles) and Test Pin 40 or 60 at the breakout box. • **Is voltage greater than 2.0 volts?**	Yes ▶ No ▶	SERVICE HO2S signal circuit for shorts to power. REMOVE breakout box. RECONNECT all components. RERUN Quick Test. REPLACE right/rear HO2S. REMOVE breakout box. RECONNECT all components. RERUN Quick Test.

Pinpoint Test QA6

TEST STEP		RESULT ▶	ACTION TO TAKE
QA7	CHECK STO CIRCUIT FOR SHORT TO GROUND		
	• Key off. • Breakout box installed, processor disconnected. • Measure resistance between STO circuit in the Self-Test connector and engine block ground. • **Is resistance less than 5.0 ohms?**	Yes ▶ No ▶	SERVICE STO or MIL circuit for short to ground. REMOVE breakout box. RECONNECT processor. RERUN Quick Test. GO to QA8.

Pinpoint Test QA7

TEST STEP	RESULT ▶	ACTION TO TAKE
QA8 CHECK IF POWER RELAY IS ALWAYS ON		
• Key off. • Breakout box installed, processor disconnected. • Connect DVOM to Test Pin 37 or 57 and to Test Pin 40 or 60 at the breakout box. • DVOM on 20 volt scale. • Turn key on and then off. Wait 10 seconds. • **Does voltage change from greater than 10.5 volts to less than 1.0 volt?**	Yes ▶ No ▶	RECONNECT processor. GO to QA10. GO to QA9.

Pinpoint Test QA8

TEST STEP	RESULT ▶	ACTION TO TAKE
QA9 CHECK VPWR CIRCUIT FOR SHORT TO POWER		
• Key off. • Breakout box installed, processor disconnected. • Disconnect EEC Power Relay or Integrated Relay Control Module. • Measure voltage between Test Pin 37 or 57 and Test Pin 40 or 60 at the breakout box. • **Is voltage greater than 1.0 volts?**	Yes ▶ No ▶	SERVICE VPWR circuit short to power. REMOVE breakout box. RECONNECT all components. RERUN Quick Test. REPLACE EEC Power Relay or Integrated Relay Controller. REMOVE breakout box. RECONNECT processor. RERUN Quick Test.

Pinpoint Test QA9

TEST STEP	RESULT ▶	ACTION TO TAKE
QA10 CHECK MIL FUNCTION		
• **Are any of these conditions present?** Malfunction indicator light (MIL):	Always ON ▶ Always OFF ▶ Functioning normally ▶	REMOVE breakout box. RECONNECT processor. GO to Pinpoint Test Step ML1. REMOVE breakout box. RECONNECT processor. GO to Pinpoint Test Step ML4. REPLACE the processor. RERUN Quick Test.

Pinpoint Test QA10

QB - Testing Notes

NOTE: You should enter this Pinpoint Test only when you have been directed here from Quick Test.

REMEMBER

This Pinpoint Test is intended to diagnose only the following:

- Harness circuit: KAPWR

- Processor

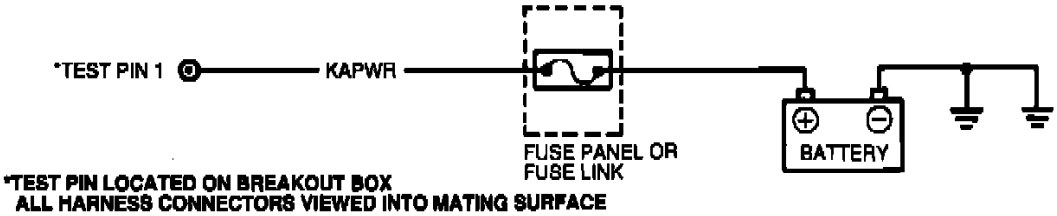

Test Pin 1—KAPWR

Application	Wire Color
Car: Town Car	Y/BK
Escort/Tracer Probe	BL/R
Truck: 7.0L F-Series	BK/Y
All Other Car and Truck	Y

Schematic Diagram

TEST STEP		RESULT ▶	ACTION TO TAKE
QB1	CHECK KAPWR TO PROCESSOR		
	Continuous Code 15/512 indicates that the processor has experienced a power interrupt in its Keep Alive Memory (KAM) circuit. NOTE: **If KAPWR is interrupted to the processor, for example when installing a breakout box, or when battery is disconnected, Code 15/512 may be stored in continuous memory.** ● Key off. ● Disconnect processor 60-pin connector. Inspect for damaged or pushed out pins, corrosion, loose wires, etc. Service as necessary. ● Install breakout box, leave processor disconnected. ● Measure voltage between Test Pin 1 and Test Pin 40 or 60 at the breakout box. ● While observice DVOM, grasp the EEC-IV harness and wiggle, shake or bend a small section while working your way from the processor to the dash panel. ● **Does DVOM indicate less than 10.5 volts?**	Yes ▶ No ▶	SERVICE open circuit. REMOVE breakout box. RECONNECT processor. RERUN Quick Test. RECONNECT processor. GO to QB2.

Pinpoint Test QB1

TEST STEP		RESULT ▶	ACTION TO TAKE
QB2	INSPECT ENGINE COMPARTMENT WIRING FOR PROPER ROUTING		
	● Inspect EEC wiring for closeness to ignition components or wires. If EEC wiring is close, reroute as necessary. ● Clear Continuous Memory Codes ● Wait five minutes to allow Code 15/512 to reset. ● Rerun Key On Engine Off Self-Test. ● **Is Code 15 or 512 still present on retest?**	Yes ▶ No ▶	REPLACE processor. REMOVE breakout box. RERUN Quick Test. REMOVE breakout box. RECONNECT processor. SERVICE other codes as necessary. If none, testing is complete.

Pinpoint Test QB2

QC - Testing Notes

NOTE: You should enter this Pinpoint Test only when you have been directed here from other Pinpoint Test.

REMEMBER

This Pinpoint Test is intended to diagnose only the following:

- Test Conditions

- Throttle Plate Linkage

TEST STEP		RESULT ▶	ACTION TO TAKE
QC1	CHECK FOR CODES 23, 53, 63, 121, 122 or 123		
	NOTE: **If vehicle is equipped with speed control, the speed control servo must be electrically disconnected. This prevents the speed control system from affecting the throttle plate movement during Output State Check. Rerun Quick Test or Output State Check.** ● Key off. ● Perform Key On Engine Off Self-Test. ● **Are any of these codes (23, 53, 63, 121, 122 or 123) present?**	Yes ▶ Code 11 or 111 ▶ No Codes ▶	GO to Quick Test and SERVICE appropriate code as instructed. GO to QC2. GO to Pinpoint Test Step QA1.

Pinpoint Test QC1

TEST STEP		RESULT ▶	ACTION TO TAKE
QC2	CHECK THROTTLE LINKAGE		
	● Check throttle and throttle linkages for sticking and binding. ● **Is throttle OK?**	Yes ▶ No ▶	REPLACE TP sensor. RERUN Quick Test. SERVICE as necessary. RERUN Quick Test.

Pinpoint Test QC2

S - Testing Notes

NOTE: You should enter this Pinpoint Test only when you have been directed here from Quick Test or Pinpoint Test AA, AB, or AC.

REMEMBER

To prevent the replacement of good components, be aware that the following non-EEC areas may be at fault.

- Poor power/ground connections

- Ignition system distributor cap, rotor, wires, coil, plugs

- Base engine valves cam timing compression, etc.

This Pinpoint Test is intended to diagnose only the following:

- ISC Bypass Air System

- MAP system

- EGR system

- MAF system

TEST STEP		RESULT ▶	ACTION TO TAKE
S1	ISC-BPA CHECK		
	● Attempt to start engine at part throttle. ● **Will engine run smooth at part throttle?**	Yes ▶ No ▶	GO to Pinpoint Test Step KE4. GO to S3.

Pinpoint Test S1

TEST STEP		RESULT	ACTION TO TAKE
S2	CHECK FOR RPM DROP		
	• Key off. • Connect engine tachometer. • Start engine. • Disconnect ISC solenoid. • **Does rpm drop or stall?**	Yes No	RECONNECT ISC solenoid. GO to S3. Go to Pinpoint Test Step KE4.

Pinpoint Test S2

TEST STEP		RESULT	ACTION TO TAKE
S3	POWER TO MAP / BP SENSOR TEST		
	NOTE: **If the vehicle being checked is not equipped with MAP / BP system hardware go directly to S8. Green light on tester indicates VREF is OK. Red Light (or no light) indicates VREF is either too low or too high.** • Key off. • Disconnect the MAP / BP sensor from the vehicle harness. • Connect the MAP / BP tester between the vehicle harness and the MAP / BP sensor (refer to schematic). • Insert MAP / BP tester banana plugs into DVOM. • Key on, engine off. • **Is green light on?**	Yes No	GO to S4. SERVICE open VREF circuit. REMOVE MAP / BP tester. RECONNECT MAP / BP. RE-EVALUATE symptom.

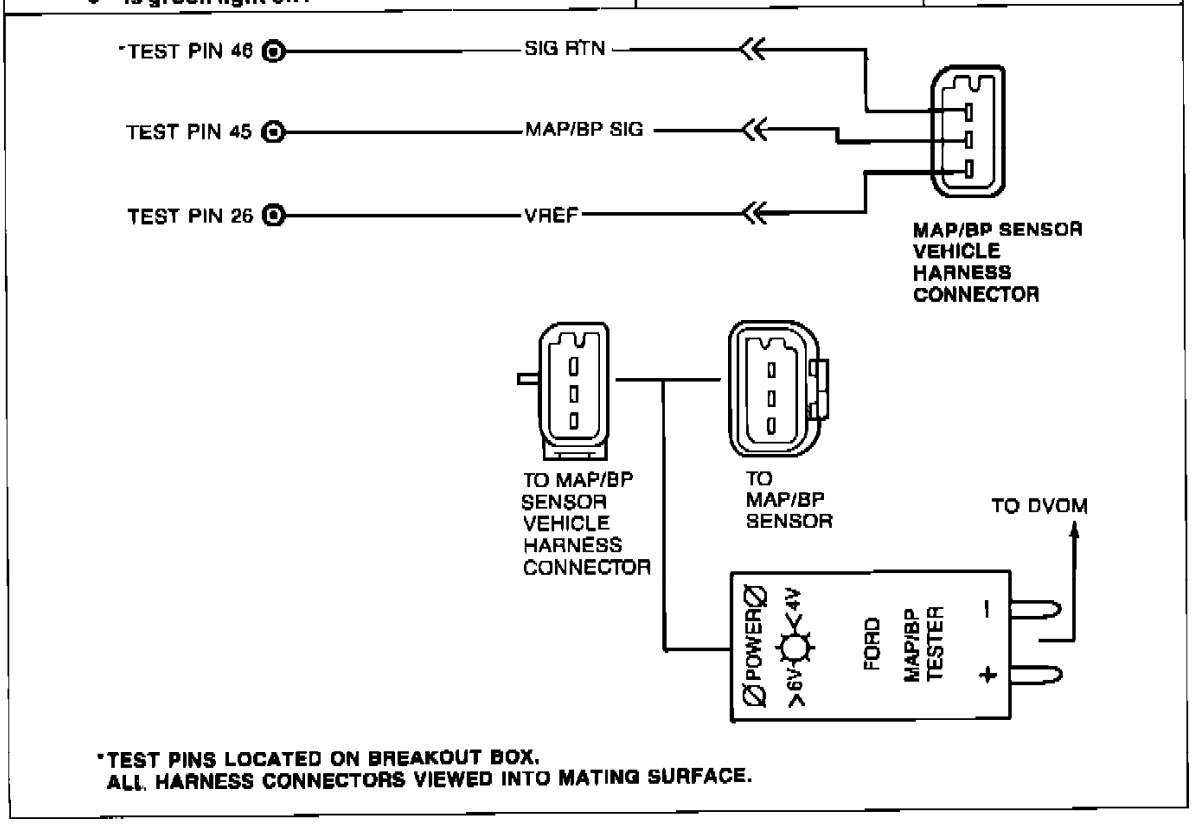

Pinpoint Test S3

TEST STEP		RESULT ▶	ACTION TO TAKE
S4	MAP/BP TESTER OUTPUT READING		
	NOTE: **Measure several known good MAP/BP sensors on available vehicles. The measured voltage will be typical for your location on the day of testing.** • MAP/BP Tester and DVOM connected. • Key on. • **Is voltage in range for your altitude?**	Yes ▶ No (Sensor output is out-of-range) ▶	**For vehicles with Mass Air Flow sensors:** GO to S8. **For all others:** GO to S5. REPLACE MAP/BP sensor.

Approximate Altitude (Ft.)	Voltage Output (+/-.04 Volts)
0	1.59
1000	1.56
2000	1.53
3000	1.50
4000	1.47
5000	1.44
6000	1.41
7000	1.39

Pinpoint Test S4

TEST STEP		RESULT ▶	ACTION TO TAKE
S5	CHECK VACUUM LINES		
	• Check vacuum lines for proper routing. Refer to VECI decal. Check MAP sensor vacuum line for holes, disconnections, kinks or blockage. • **Are vacuum lines OK?**	Yes ▶ No ▶	GO to S6. SERVICE vacuum lines as necessary. RERUN Quick Test.

Pinpoint Test S5

TEST STEP		RESULT ▶	ACTION TO TAKE
S6	CHECK MAP SENSOR		
	• Key off. • Disconnect MAP vacuum hose from manifold Tee. • Install vacuum pump to MAP vacuum hose. • Apply 18 in-Hg (61 kPa) vacuum to MAP sensor. • **Does MAP sensor and vacuum hose hold vacuum?**	Yes ▶ No ▶	RELEASE vacuum. REMOVE vacuum pump. GO to S7. REPLACE MAP sensor. RECONNECT vacuum line to MAP sensor. RERUN Quick Test.

Pinpoint Test S6

TEST STEP		RESULT ▶	ACTION TO TAKE
S7	CHECK VACUUM MANIFOLD SOURCE		
	• Key off. • MAP vacuum hose from manifold vacuum Tee disconnected. • Install vacuum gauge to manifold vacuum Tee. • Start/crank engine. • **Is manifold vacuum present at the vacuum Tee?**	Yes ▶ No ▶	REMOVE vacuum gauge. RECONNECT vacuum line to MAP sensor and manifold vacuum Tee. GO to S8. REMOVE obstruction in manifold vacuum Tee or REPLACE damaged manifold vacuum Tee. RERUN Quick Test.

Pinpoint Test S7

TEST STEP		RESULT	ACTION TO TAKE
S8	CHECK EGR VACUUM		
	NOTE: If the vehicle being checked is not equipped with EGR system hardware, go directly to H2. The next two test steps will attempt to determine if the EGR system is the cause of the current symptom and/or NO START. • Disconnect vacuum line at EGR valve, and plug the vacuum line. • Start engine. NOTE: When verifying drive symptom, a DTC may possibly be stored in memory; erase Continuous Memory before proceeding with procedure. For Drive Symptom: — Was drive symptom eliminated? For No Start: — Does engine start?	Yes No	For vehicles with EVP sensors: GO to Pinpoint Test Step DN42. For all others: GO to Pinpoint Test Step DL21. GO to S9.

Pinpoint Test S8

TEST STEP		RESULT	ACTION TO TAKE
S9	CHECK EGR VALVE		
	• Check EGR valve for housing leaks or EGR gasket blow-by. Service as necessary. • Remove EGR valve and check for proper seating. • Does EGR valve seat properly (fully closed)?	Yes No	RECONNECT original EGR valve. For 2.0L Probe: GO to Pinpoint Test Step FE1. For 3.0L Flexible Fuel: GO to Pinpoint Test Step HB2. For all others: GO to Pinpoint Test Step H2. RECONNECT oringinal EGR valve. REFER to emission control systems for EGR valve diagnosis.

Pinpoint Test S9

TA - Testing Notes

NOTE: You should enter this Pinpoint Test only when you have been directed her from Quick Test.

REMEMBER

This Pinpoint Test is intended to diagnose only the following:

- Clutch engage/interlock switch

- Neutral drive/gear switch

- Processor

- Harness circuits: CES, CIS, NDS, NGS, and SIG RTN

DESCRIPTION

The Neutral Drive Input gives an indication of the transmission load to the processor. The information is required for adjustment fuel/air ratio and idle speed. If the Neutral Drive Switch **(NDS)**, Neutral Gear Switch **(NGS)** or Clutch Engage Switch **(CES)** is closed, the circuit from Test Pin 30 will be grounded.

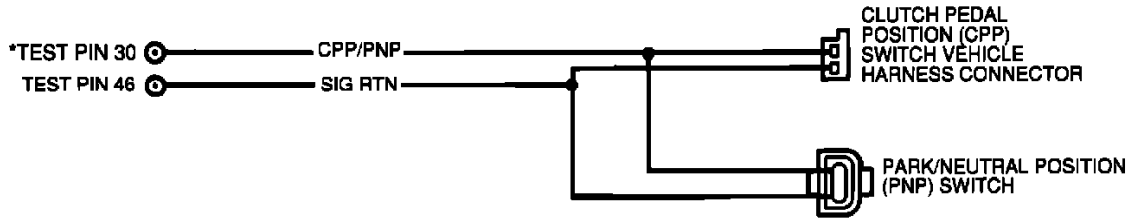

Schematic Diagram

TEST STEP		RESULT ▶	ACTION TO TAKE
TA1	DIAGNOSTIC TROUBLE CODE (DTC) 67/522, 525 or 528: SYSTEM IDENTIFICATION		
	DTC 67/522, 525, or 528 resulted from the voltage being high at either: — Pin 10 = A/C input — Pin 30 = PNP/CPP input while cranking the engine or during KOEO Diagnostic Test Mode (DTM). Possible causes: — A/C circuit shorted to power — CPP circuit open — PNP open — Damaged PCM — Starter relay disconnected during Self-Test.	**For Manual Transmissions:** 3.0L SHO and 4.9L	▶ GO to TA7.
		1.9L SFI, 2.3L, 3.0L, 3.8L SFI Super Charged, 4.0L and 5.0L SFI MAF	▶ GO to TA2.
		For Automatic Transmissions: 1.9L SFI	▶ GO to TA10.
		For all other engines:	▶ GO to TA8.

Pinpoint Test TA1

TEST STEP		RESULT ▶	ACTION TO TAKE
TA2	CHECK NEUTRAL GEAR/CLUTCH INPUT		
	• Key off. • Verify A/C is off, if so equipped. • Disconnect processor 60 pin connector. Inspect for damaged or pushed out pins, corrosion, loose wires, etc. Service as necessary. • Install breakout box, leave processor disconnected. • Measure resistance between Test Pin 30 and Test Pin 46 at the breakout box: 1. With transmission in NEUTRAL and the clutch pedal up. 2. With transmission in GEAR and the clutch pedal down. • **Is each resistance less than 5.0 ohms?**	Yes	▶ GO to TA3.
		No	▶ GO to TA5.

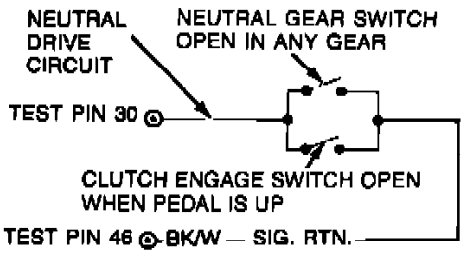

Pinpoint Test TA2

TEST STEP		RESULT ▶	ACTION TO TAKE
TA3	CHECK NEUTRAL GEAR / CLUTCH INPUT INTEGRITY		
	• Key off. • Breakout box installed, processor disconnected. • Processor disconnected. • Measure resistance between Test Pin 30 and Test Pin 46 at the breakout box with transmission in any gear and the clutch pedal up. • **Is resistance less than 5.0 ohms?**	Yes ▶	**For vehicles with A/C:** GO to Pinpoint Test Step KM40. **All others:** REPLACE processor. REMOVE breakout box. RERUN Quick Test.
		No ▶	GO to TA4.

Pinpoint Test TA3

TEST STEP		RESULT ▶	ACTION TO TAKE
TA4	CHECK FOR SHORT TO GROUND		
	• Key off. • Breakout box installed, processor disconnected. • Disconnect Clutch Engage Switch. • Measure resistance between Test Pin 30 and Test Pin 46 at the breakout box. • **Is resistance greater than 10,000 ohms?**	Yes ▶	**For vehicles with A/C:** GO to Pinpoint Test Step KM40. **All others:** REPLACE processor. REMOVE breakout box. RERUN Quick Test.
		No ▶	SERVICE short circuit. REMOVE breakout box. RECONNECT processor. RERUN Quick Test.

Pinpoint Test TA4

TEST STEP		RESULT ▶	ACTION TO TAKE
TA5	CHECK NEUTRAL GEAR / CLUTCH ENGAGE SWITCH		
	• Key off. • Breakout box installed, processor disconnected • Locate Neutral Gear Switch (on transmission) and Clutch Engage Switch (at clutch pedal linkage). • Disconnect vehicle harness at both switches and inspect connectors for pushed back pins. • Measure resistance across the Neutral Gear switch terminals with transmission in neutral and across the clutch switch terminals with the clutch pedal down. • **Is each resistance less than 5.0 ohms?**	Yes ▶	GO to TA6.
		No ▶	REPLACE open switch(es). REMOVE breakout box. RECONNECT all components. RERUN Quick Test.

Pinpoint Test TA5

TEST STEP		RESULT ▶	ACTION TO TAKE
TA6	CHECK NEUTRAL GEAR/CLUTCH HARNESS		
	• Key off. • DVOM on 200 ohm scale. • Breakout box installed, processor disconnected. • Vehicle harness disconnected at the Neutral Gear switch and Clutch switch. • Measure resistance between Test Pin 30 and the Neutral Gear Switch harness connector and between Test Pin 30 and the Clutch Engage Switch harness connector. • Measure resistance between Test Pin 46 and the Neutral Gear Switch harness connector and between Test Pin 46 and the Clutch Engage Switch harness connector. • **Is each resistance less than 5.0 ohms?**	Yes ▶ No ▶	**For vehicles with A/C:** GO to Pinpoint Test Step KM40. **For all others:** REPLACE processor. SERVICE open circuit. REMOVE breakout box. RECONNECT all components. RERUN Quick Test.

Pinpoint Test TA6

TEST STEP		RESULT ▶	ACTION TO TAKE
TA7	CHECK CLUTCH ENGAGE SWITCH		
	NOTE: **For 4.9L engines, the clutch pedal must be down during KOEO test.** • Key off. • A/C off. • Disconnect processor 60 pin connector. Inspect for damaged or pushed out pins, corrosion, loose wires, etc. Service as necessary. • Install breakout box, leave processor disconnected. • Clutch pedal down. **For 3.0L SHO:** — Measure resistance between Test Pin 30 and Test Pin 46 at the breakout box. **For 4.9L:** — Measure resistance between Test Pin 30 at the breakout box and starter relay. • **Is each resistance less than 5.0 ohms?**	Yes ▶ No ▶	**For vehicles with A/C:** GO to Pinpoint Test Step KM40. **For all others:** REPLACE processor. SERVICE open circuit. REMOVE breakout box. RECONNECT all components.

Pinpoint Test TA7

TEST STEP		RESULT ▶	ACTION TO TAKE
TA8	CHECK NEUTRAL DRIVE INPUT		
	• Key off. • Verify A/C is OFF, if so equipped. • Verify transmission is in NEUTRAL or PARK. • Disconnect processor 60 pin connector. Inspect for damaged or pushed out pins, corrosion, loose wires, etc. Service as necessary. • Install breakout box, leave processor connected. • Key on, engine off. • Measure voltage between Test Pin 30 at the breakout box and chassis ground. • **Is voltage less than 1.0 volt?**	Yes ▶ No ▶	**For vehicles with A/C:** GO toPinpoint Test Step KM40. ▶ **For all others:** REPLACE processor. Go to TA9.

Pinpoint Test TA8

TEST STEP	RESULT ▶	ACTION TO TAKE
TA9 CHECK NEUTRAL DRIVE SWITCH		
• Key off. • Breakout box installed, processor disconnected. • Locate the Neutral Drive Switch. • Disconnect vehicle harness from the Neutral Drive Switch and measure resistance across the switch. • **Is resistance less than 5.0 ohms?**	Yes ▶ No ▶	SERVICE open in vehicle harness Neutral Drive circuit. REMOVE breakout box. RECONNECT all components. RERUN Quick Test. REPLACE Neutral Drive Switch. REMOVE breakout box. RECONNECT all components. RERUN Quick Test.

Pinpoint Test TA9

TEST STEP	RESULT ▶	ACTION TO TAKE
TA10 CHECK NEUTRAL DRIVE INPUT		
NOTE: For Escort/Trace with EEC-IV "Integrated 4EAT", go to TA15. "Stand-Alone" application can be identified by looking for the 4EAT mdoule under the driver's side dash between steering column and the kick panel. The 4EAT module will not be present on "Integrated 4EAT" application. • Key off. • Verify transmission is in PARK or NEUTRAL. • Disconnect processor 60 pin connector. Inspect for damaged or pushed out pins, corrosion, loose wires, etc. Service as necessary. • Install breakout box and connect processor to breakout box. • Disconnect 16 pin connector from the 4EAT module. • Key on, engine off. • Measure voltage between Test Pin 30 at the breakout box and chassis ground. • **Is voltage less than 1.0 volt?**	Yes ▶ No ▶	REPLACE processor. REMOVE breakout box. RECONNECT all components. RERUN Quick Test. Key off. GO to TA11.

Pinpoint Test TA10

TEST STEP	RESULT ▶	ACTION TO TAKE
TA11 CHECK NDS CIRCUIT CONTINUITY BETWEEN PROCESSOR AND 4EAT MODULE		
• Key off. • 4EAT module 16 pin connector disconnected. • Breakout box installed. • Disconnect processor. • Measure resistance between Test Pin 30 at the breakout box and the NDS pin at the 4EAT module vehicle harness connector. • **Is resistance less than 5.0 ohms?**	Yes ▶ No ▶	REFER to the TRANSMISSION SECTION. REMOVE breakout box and RECONNECT all components when testing is complete. SERVICE open circuit. REMOVE breakout box. RECONNECT all components. RERUN Quick Test.

Pinpoint Test TA11

TEST STEP		RESULT ▶	ACTION TO TAKE
TA12	CHECK PNP CIRCUIT FOR SHORT TO GROUND OR CLOSED SWITCH		
	• Key off. • Disconnect Powertrain Control Module (PCM). Inspect for damaged or pushed out pins, corrosion, loose wires, etc. Service as necessary. • Install breakout box, leave PCM disconnected. • Place transmission in DRIVE. • DVOM on 200,000 ohm scale. • Measure resistance between Test Pin 30 and Test Pin 40/60 at the breakout box. • **Is resistance greater than 10,000 ohms?**	Yes ▶ No ▶	REFER to diagnostic routines for other possible causes. SERVICE short circuit or closed PNP switch. REMOVE breakout box. RECONNECT PCM. RE-EVALUATE symptom.

Pinpoint Test TA12

TEST STEP		RESULT ▶	ACTION TO TAKE
TA15	SERVICE CODE 522: DOES ENGINE START?		
	Key On Engine Off Service Code 522 indicates that during Self-Test, high voltage was sensed at Pin 30 (NDS). Possible causes: Engine starts: — Transmission not in PARK during Self-Test. — Open NDS circuit between processor and connction to START circuit. — NDS/START circuit short to power. — Damaged processor. No start: — Damaged starter relay. — Open START circuit between inhibit switch and NDS connection to circuit, inhibit switch and starter relay or starter relay and ground. NOTE: **Verify that transmission was in PARK during Quick Test. If transmission was not in PARK, rerun Quick Test and proceed as directed.** • **Does engine start?**	Yes ▶ No ▶	GO to TA16. REFER to Starting and CHARGING SECTION.

Pinpoint Test TA15

TEST STEP		RESULT ▶	ACTION TO TAKE
TA16	CHECK NDS/START CIRUCIT FOR SHORT TO POWER		
	• Key off. • Disconnect processor 60-pin connector. Inspect for damaged or pushed out pins, corrosion, loose wires, etc. Service as necessary. • Install breakout box, leave processor disconnected. • Key on. • Measure voltage between Test Pin 30 and Test Pin 40 (GND) at the breakout box. • **Is voltage less than 0.5 volt?**	Yes ▶ No ▶	Key off. GO to TA17. SERVICE short to power (a direct short to power would always activate starter when inhibit switch was closed. This would prevent KOEO Self-Test from being entered. Short to power is most likely a high resistance short). REMOVE breakout box. RERUN Quick Test.

Pinpoint Test TA16

TEST STEP	RESULT	ACTION TO TAKE
TA17 CHECK NDS CIRCUIT CONTINUITY • Key off. • Breakout box installed, processor disconnected. • Disconnect inhibit switch (3 pin at transmission). • Measure resistance between Test Pin 30 at the breakout box and NDS / IGN START circuit at inhibit switch vehicle harness connector. • Is resistance less than 5.0 ohms? 	Yes No	REPLACE processor. REMOVE breakout box. RECONNECT all components. RERUN Quick Test. SERVICE open between processor and NDS circuit connection to START circuit. REMOVE breakout box. RECONNECT all components. RERUN Quick Test.

Pinpoint Test TA17

TC - Testing Notes

NOTE: You should enter this Pinpoint Test only when you have been directed here from Quick Test.

REMEMBER

This Pinpoint Test is not intended to diagnose components interior to the transmission. To prevent the replacement of good components, be aware that the following non-EEC areas may be at fault.

- Engine

  Performance, vacuum, cooling

- Brakes

  Not releasing

- Electrical

  Alternator, battery, integrity

- Transmission

  Hydraulic fluid, friction elements, cooling

This Pinpoint Test is intended to diagnose only the following:

- Harness circuits: M/CCC, CCO, CCS, EPC, SS3/4-4/3 SS1, SS2, SS3, SIG RTN, EPC PWR, and VPWR

- Processor assembly

DESCRIPTION

The A4LD, AXOD-E, AOD-E, and E40D transmissions use solenoids to shift transmission gear ratios, connect both turbine and impeller in the torque converter, and provides coasting on deceleration. The ground signal is controlled by the EEC-IV processor and 12 volts VPWR is supplied to the solenoids from the EEC-IV power relay.

TEST STEP		RESULT ▶	ACTION TO TAKE
TC1	ENTER OUTPUT STATE DIAGNOSTIC TEST MODE (DTM)		
	DTCs 91/621, 92/622, 93/626, 94/627, 629, 641, 652 indicate solenoid did not change state when requested by the Powertrain Control Module (PCM). DTC 86/586 or 89/629 indicates that the CCO or 553/4-4/3 did not change state when requested by the PCM. Possible causes: — Damaged solenoid/assembly — Open or shorted harness (internal/external) — Damaged PCM NOTE: **Do not use a STAR Tester for this step. Use a VOM or DVOM.** • Disconnect electrical connector on the speed control servo, if equipped. • VOM/DVOM on 20 volt scale. • Connect negative test lead to STO circuit at Data Link Connector (DLC) and meter positive test lead to B+. • Jumper STI circuit to SIG RTN at the DLC. • Perform Key On Engine Off Self-Test until Continuous Memory DTC have been displayed. • VOM/DVOM will indicate less than 1.0 volt when test is complete. • Depress and release throttle. • **Does voltage increase?**	Yes ▶ No ▶	REMAIN in Output State DTM. GO to TC2. DEPRESS throttle to WOT and RELEASE. If STO voltage does not go high PERFORM Pinpoint Test Step QC1. Leave equipment hooked up.

Pinpoint Test TC1

TEST STEP		RESULT ▶	ACTION TO TAKE
TC2	CHECK SOLENOID ELECTRICAL OPERATION		
	• Key on, engine off. • Disconnect transmission bulkhead connector (for AXOD-E the appropriate connector). • Using a mirror, inspect both ends of the connector for damaged or pushed out pins, corrosion, loose wires, etc. Service as necessary. • Refer to the schematic and table of this Pinpoint Test. • Connect VOM/DVOM positive test lead to solenoid VPWR circuit and negative test lead to transmission's vehicle harness connector. • VOM/DVOM on 20 volt scale. • While observing DVOM, depress and release throttle several times to cycle solenoid output ON and OFF. • **Does the suspect solenoid output voltage change at least 0.5 volt?**	Yes ▶ No ▶	RECONNECT bulkhead connector. REFER to TRANSMISSION SECTION. REMOVE jumper wire. GO to TC3.

Pinpoint Test TC2

TEST STEP		RESULT ▶	ACTION TO TAKE
TC3	CHECK CONTINUITY OF SOLENOID SIGNAL AND VPWR HARNESS CIRCUITS		
	• Key off. • Solenoid transmission bulkhead connector disconnected. • Disconnect processor 60-pin connector. Inspect for damaged or pushed out pins, corrosion, loose wires, etc. Service as necessary • Install breakout box, leave processor disconnected. • Refer to schematic and table in this Pinpoint Test. • Measure resistance between processor signal output pin at the breakout box and signal output pin at transmission vehicle harness connector. • Measure resistance between Test Pin 37/57 at the breakout box and VPWR pin at transmission vehicle harness connector. • **Is each resistance less than 5.0 ohms?**	Yes ▶ No ▶	GO to TC4. SERVICE open circuit(s). REMOVE breakout box. RECONNECT all components. RERUN Quick Test.

Pinpoint Test TC3

TEST STEP		RESULT ▶	ACTION TO TAKE
TC4	CHECK SOLENOID HARNESS FOR SHORTS TO POWER OR GROUND		
	• Key off. • Breakout box installed, PCM disconnected. • Transmission connector disconnected. • Refer to schematic and table in this Pinpoint Test. • Measure resistance between PCM signal output pin and Test Pin 37/57 at the breakout box. • Measure resistance between PCM signal output pin and Test Pins 40/60 and 46 at the breakout box and chassis ground. • **Is each resistance greater than 10,000 ohms?**	Yes ▶ No ▶	REFER to transmission and drivetrain for internal harness and solenoids. IF OK, REPLACE PCM. REMOVE breakout box. RECONNECT all components. RERUN Quick Test. SERVICE short circuits. REMOVE breakout box. RECONNECT all components. RERUN Quick Test.

Pinpoint Test TC4

TEST STEP		RESULT ▶	ACTION TO TAKE
TC10	CHECK VPWR TO SOLENOID		
	DTC 99/624 indicates a failure of EPC circuit. DTC 625 indicates an opening in the driver circuit. Possible causes: — Open or short in harnesses (internal/external). — Solenoid damaged electrically. • Key off. • Disconnect transmission connector. • Key on, engine off. • Measure the voltage between VPWR, EPC PWR circuit at transmission vehicle harness connector and chassis/battery ground. • **Is voltage greater than 10.5 volts?**	Yes ▶ No ▶	GO to TC11. SERVICE open in harness. RECONNECT all components. RERUN Quick Test.

Pinpoint Test TC10

TEST STEP		RESULT ▶	ACTION TO TAKE
TC11	CHECK CONTINUITY OF SOLENOID SIGNAL AND VPWR HARNESS CIRCUIT		
	• Key off. • Disconnect Powertrain Control Module (PCM). Inspect for damaged or pushed out pins, corrosion, loose wires, etc. Service as necessary. • Install breakout box, leave PCM disconnected. • Measure the resistance between Test Pin 37/57 (Test Pin 35 on 7.3L Diesel for EPC solenoid check only) at the breakout box and VPWR/EPC PWR circuit at the transmission vehicle harness connector. • Measure resistance between Test Pin 38 at the breakout box and EPC solenoid signal pin at the transmission vehicle harness connector. • **Is each resistance less than 5.0 ohms?**	Yes ▶ No ▶	GO to TC12. SERVICE open circuit. REMOVE breakout box. RECONNECT all components. RERUN Quick Test.

Pinpoint Test TC11

TEST STEP		RESULT ▶	ACTION TO TAKE
TC12	CHECK HARNESS FOR SHORT TO POWER OR GROUND		
	• Key off. • Breakout box installed, PCM disconnected. • Transmission bulkhead connector disconnected. • **Refer to the schematic for the transmission and vehicle application.** • Measure resistance between suspect solenoid circuit Test Pin and Test Pin 37/57 (Test Pin 35 on 7.3L Diesel) at the breakout box. • Measure resistance between suspect solenoid circuit Test Pin and Test Pins 40/60, 46 at the breakout box. • **Is each resistance greater than 10,000 ohms?**	Yes ▶ No ▶	REFER to transmission and drivetrain for internal harness and solenoids. If OK, REPLACE PCM. REMOVE breakout box. RECONNECT EPC solenoid. RERUN Quick Test. SERVICE short circuits. REMOVE breakout box. RECONNECT all components. RERUN Quick Test.

Pinpoint Test TC12

TEST STEP		RESULT ▶	ACTION TO TAKE
TC20	KEY ON ENGINE OFF SERVICE CODE 621/622/641/643: CHECK SOLENOID RESISTANCE		
	Key On Engine Off Service Code(s) 621 (SS1), 622 (SS2), 641 (SS3) and 643 (CCC) indicate a failure in the respective shift solenoid circuit. Possible causes: — Open harness. — Shorted harness (ground or power). — Damaged shift solenoid. — Damaged processor. • Key off. • Disconnect transmission connector (12 pin at transmission). • Measure resistance between suspect shift solenoid circuit at transmission connector and chassis ground. • **If the resistance between 13 and 27 ohms?**	Yes ▶ No ▶	GO to TC21. GO to TC25.

Pinpoint Test TC20

TEST STEP		RESULT ▶	ACTION TO TAKE
TC21	CHECK SHIFT SOLENOID CIRCUIT FOR SHORT TO POWER		
• Key off. • Transmission 12-pin connector disconnected. • Disconnect processor 60-pin connector. Inspect for damaged or pushed out pins, corrosion, loose wires, etc. Service as necessary. Leave processor disconnected. • Key on, engine off. • Measure voltage between suspect shift solenoid circuit at transmission vehicle harness connector and chassis ground. • **Is voltage less than 0.5 volt?** 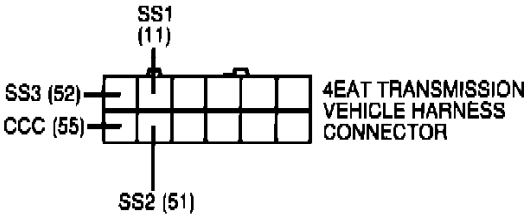		Yes ▶ No ▶	Key off. Go to TC22. SERVICE short to power. RECONNECT all components. RERUN Quick Test.

Pinpoint Test TC21

TEST STEP		RESULT ▶	ACTION TO TAKE
TC22	CHECK SHIFT SOLENOID CIRCUIT FOR SHORT TO GROUND		
• Key off. • Transmission 12-pin connector disconnected. • Processor disconnected. • Measure resistance between suspect shift solenoid circuit at transmission vehicle harness connector and chassis ground. • Measure resistance between suspect shift solenoid circuit and the other circuits at transmission 12-pin vehicle harness connector. • **Are all resistances greater than 10,000 ohms?**		Yes ▶ No ▶	GO to TC23 SERVICE short. RECONNECT all components. RERUN Quick Test.

Pinpoint Test TC22

TEST STEP		RESULT ▶	ACTION TO TAKE
TC23	CHECK SHIFT SOLNEOID CIRCUIT CONTINUITY		
• Key off. • Transmission 12-pin connector disconnected. • Install breakout box or 4EAT Tester, leave processor disconnected. • Measure resistance between suspect shift solenoid test pin at the breakout box and shift solenoid circuit at transmission 12-pin vehicle harness connector. • **Is resistance less than 5.0 ohms?**		Yes ▶ No ▶	GO to TC24. SERVICE open circuit. RECONNECT all components. RERUN Quick Test.

Pinpoint Test TC23

TEST STEP		RESULT ▶	ACTION TO TAKE
TC24	CHECK SHIFT SOLENOID FOR SHORT TO POWER IN TRANSMISSION		
	• Key off. • Breakout box installed, processor disconnected. • Reconnect transmission 12-pin connector. • Measure resistance between suspect shift solenoid test pin at the breakout box and Test Pin 60. • **Is voltage less than 0.5 volt?**	Yes ▶ No ▶	REPLACE processor. REMOVE breakout box. RERUN Quick Test. SERVICE shift solenoid circuit within transmission for a short to power SERVICE as necessary. REMOVE breakout box. RECONNECT processor. RERUN Quick Test.

Pinpoint Test TC24

TEST STEP		RESULT ▶	ACTION TO TAKE
TC25	INSPECT TRANSMISSION WIRING		
	• Key off. • Check transmission connector / external wiring for open or shorts. Service as necessary. • Check internal transmission wiring for opens or shorts. • **Is the transmission wiring OK?**	Yes ▶ No ▶	REPLACE suspect shift solenoid. REASSEMBLE / RECONNECT all components. RERUN Quick Test. SERVICE as necessary. REASSEMBLE / RECONNECT all components. RERUN Quick Test.

Pinpoint Test TC25

TEST STEP		RESULT ▶	ACTION TO TAKE
TC30	CONTINUOUS MEMORY CODES 621 / 622 / 641 / 643: VISUALLY CHECK SHIFT SOLENOID HARNESS		
	Continuous Memory Code(s) 621 (SS1), 622 (SS2), 641 (SS3) and 643 (CCC) indicate that sometime during the last 80 warm-up cycles, a failure was detected in the respective shift solenoid circuit. Possible causes: — Intermittent open / shorted harness. — Intermittent fault in shift solenoid. • Check shift solenoid wires between transmission and EEC-IV processor. • **Do the shift solenoid wires appear OK?**	Yes ▶ No ▶	GO to TC31. SERVICE as necessary. CLEAR Continuous Memory RERUN Quick Test.

Pinpoint Test TC30

TEST STEP		RESULT ▶	ACTION TO TAKE
TC31	CHECK HARNESS AND CONNECTORS FOR INTERMITTENT OPENS OR SHORTS		
	• Key off. • If breakout box or 4EAT Tester is not already installed: — Disconnect processor 60-pin connector. Inspect for damaged or pushed out pins, corrosion, loose wires, etc. Service as necessary — Install breakout box or 4EAT Tester. Leave processor disconnected. • Processor disconnected. • Key on, engine off. • Refer to the chart. Connect a test lamp between one of the shift solenoid test pins and Test Pin 37 (VPWR) at the breakout box. • Observe test lamp for an indication of a fault while performing the following (the lamp will normally be on, but not to full brightness due to the 12-25 ohm resistance to ground through the shift solenoid. An open or short to power will be indicated by the light turning off. A short to ground may be detected by the light getting brighter). — Shake, wiggle and bend the shift solenoid circuit from the transmission to EEC-IV processor. Lightly excercise harness connectors. • Repeat test for the remaining shift solenoid circuits. • Key off. • **Is a fault indicated?**	Yes No	ISOLATE fault and SERVICE as necessary. REMOVE breakout box. RECONNECT all components. RERUN Quick Test. GO to TC32.

Shift Solenoid	Test Pin
SS1	11
SS2	51
SS3	52
CCC	55

Pinpoint Test TC31

TEST STEP		RESULT ▶	ACTION TO TAKE
TC32	CHECK HARNESS AND CONNECTORS FOR INTERMITTENT SHORTS TO GROUND		
	• Key off. • Breakout box installed, PCM disconnected. • Disconnected transmission 12-pin connector. Inspect for damaged or pushed out pins, corrosion, loose wires, etc. Service as necessary. • Key on, engine off. • Refer to the chart in TC31. Connect a test lamp between the suspect shift solenoid test pins and Test Pin 37. • Observe test lamp for an indication of fault while performing the following (light will turn on when a fault is detected, indicating a short to ground): — Shake, wiggle and bend the shift solenoid circuit from the transmission to the PCM. • Repeat the test for remaining shift solenoid circuits. • **Is a fault indicated?**	Yes No	ISOLATE fault and SERVICE as necessary. REMOVE breakout box. RECONNECT all components. RERUN Quick Test. For further diagnosis using the EEC-IV monitor box REFER to intermittent fault diagnosis. If an EEC-IV monitor box is not available, GO to Pinpoint Test Step TD22 (even though TD is the MLP Pinpoint Test, we will mainly be checking the shift solenoid circuits).

Pinpoint Test TC32

Transmission Shift Position	Resistance (ohms)	
	Minimum	Maximum
Park	3770	4607
Reverse	1304	1593
Neutral	660	807
Overdrive	361	442
Drive	190	232
First	78	95

Manual Lever Position Sensor Resistance Specification Table

TD - Testing Notes

NOTE: You should enter this Pinpoint Test only when you been directed here from Quick Test.

REMEMBER

This Pinpoint Test is not intended to diagnose components interior to the transmission. To prevent replacement of good components, be aware that the following non-EEC areas may be at fault:

- Electrical
  - Generator, battery integrity.
  - Add-on devices (back-up alarm)
- Transmission
  - Shift linkage internal components.

This Pinpoint Test is intended to diagnose only the following:

- Harness Circuits: SIG RTN, MLP, TRR, TRL, TRD and TROD
- Powertrain Control Module (PCM) (12A650) or (12B565 on 7.0L Diesel)

DESCRIPTION

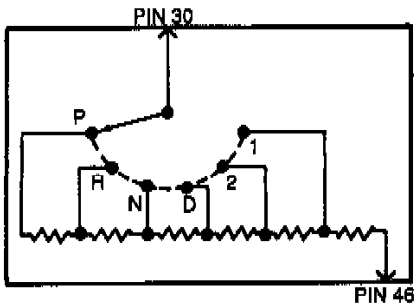

Schematic Diagram

The Manual Lever Position **(MLP)** sensor is a rotary switch mounted on the transmission shift linkage. It indicates the position of the shift lever by way of a variable resistor.

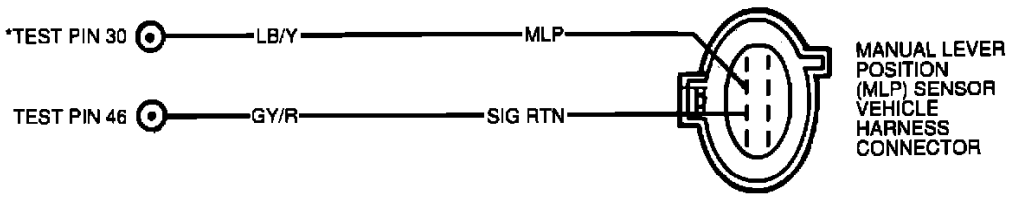

*TEST PINS LOCATED ON BREAKOUT BOX.
ALL HARNESS CONNECTORS VIEWED INTO MATING SURFACE.

Schematic Diagram

TEST STEP		RESULT ▶	ACTION TO TAKE
TD1	KEY ON ENGINE OFF DIAGNOSTIC TROUBLE CODE (DTC) 67 / 634 522 AND 654: CHECK MANUAL LEVER POSITION (MLP) SENSOR ALIGNMENT		
	DTC 67, 634, 522 indicates the MLP sensor is out of Self-Test range when the gear selector is in PARK. Possible causes: — Misadjusted linkage. — Open or short in harness circuits. — Damaged MLP sensor. — Damaged PCM. • Key off. • Apply parking brake. • Place transmission in NEUTRAL. • Verify that Manual Lever Position Sensor Tool (Rotunda T91P-7010-AHT) or equivalent fits in the appropriate slot. • **Does the tool fit properly?**	Yes ▶ No ▶	REMOVE tool. GO to TD2. PLACE the transmission in NEUTRAL. LOOSEN the two MLP sensor mounting bolts. MOVE the sensor about to allow insertion of the Manual Lever Position Sensor Tool in the appropriate slots. TIGHTEN the two mounting bolts to specification. REMOVE tool. VERIFY shift linkage adjustment. CLEAR Continuous Memory RERUN Quick Test.

Pinpoint Test TD1

TEST STEP		RESULT ▶	ACTION TO TAKE
TD2	CHECK COTNINUITY OF MLP SENSOR HARNESS CIRCUITS		
	• Key off. • Disconnect processor 60-pin connector. Inspect for damaged or pushed out pins, corrosion, loose wires, etc. Service as necessary. • Disconnect MLP sensor. • Using a mirror, inspect both ends of transmission harness connector at MLP sensor for damaged or pushed out pins, corrosion, loose wires, etc. Service as necessary. • Install breakout box, leave processor disconnected. • Measure resistance between Test Pin 30 at the breakout box and MLP signal circuit at the MLP sensor vehicle harness connector. • Measure resistance between Test Pin 46 at the breakout box and SIG RTN circuit at the MLP sensor vehicle harness connector. • **Is each resistance less than 5.0 ohms?**	Yes ▶ No ▶	GO to TD3. SERVICE open circuit(s). REMOVE breakout box. RECONNECT all components. RERUN Quick Test.

Pinpoint Test TD2

TEST STEP		RESULT ▶	ACTION TO TAKE
TD3	CHECK MLP CIRCUIT FOR SHORT TO POWER AND GROUND		
	• Key off. • MLP sensor disconnected. • Breakout box installed, PCM disconnected. • Measure resistance between Test Pin 30 and Test Pins 37 / 57, 40 / 60 and 46 at the breakout box. • Measure resistance between Test Pin 30 at the breakout box and chassis ground. • **Is each resistance greater than 10,000 ohms?**	Yes ▶ No ▶	GO to TD4. SERVICE short circuit(s). REMOVE breakout box. RECONNECT all components. RERUN Self Test.

Pinpoint Test TD3

TEST STEP		RESULT ▶	ACTION TO TAKE
TD4	CHECK MLP SENSOR RESISTANCE		
	• Key off. • Connect MLP sensor. • Breakout box installed, processor disconnected. • Unlock steering column. • Measure resistance between Test Pin 30 and Test Pin 46 at the breakout box in each gear selector position. Refer to the MLP sensor specification table. • **Is each resistance within specification?**	Yes ▶ No ▶	REPLACE processor. REMOVE breakout box. RERUN Quick Test. REPLACE MLP sensor. REMOVE breakout box. RERUN Quick Test.

Manual Lever Position (MLP) Sensor Resistance Specification Tale

Transmission Shift Position	Resistance (ohms) Minimum	Maximum
Park	3770	4607
Reverse	1304	1593
Neutral	660	807
Overdrive	361	442
Drive	190	232
First	78	95

Pinpoint Test TD4

TEST STEP		RESULT ▶	ACTION TO TAKE
TD9	TRANSMISSION IN 3RD GEAR ONLY WITH SELECTOR IN "D" AND "OD" PRELIMINARY CHECKS		
	• Check transmission fluid level and fluid condition. Service as necessary. • Test drive vehicle to check / verify symptom. During the test drive: — Drive vehicle with gear selector in both DRIVE (D) and OVERDRIVE (OD) positions. Check to see if symptom can be consistently reproduced, or if it is an intermittent concern. • **Can the symptom be consistently reproduced?**	Yes ▶ No ▶	GO to TD11. GO to TD20 (intermittent concern).

Pinpoint Test TD9

TEST STEP		RESULT ▶	ACTION TO TAKE
TD10	DIAGNOSTIC TROUBLE CODE (DTC) 634: CHECK SYMPTOM		
	Continuous Memory DTC 634 indicates that the PCM has detected an invalid combination of transmission range switch states. NOTE: **Park / Neutral Position (PNP) switch is considered a transmission range switch in this Pinpoint Test.** • Test drive vehicle with gear selector in both DRIVE (D) and OVERDRIVE (OD) positions. Check to see if transmission is always in 3rd gear with selector in the D or OD position. • **With the gear selector in D and OD position, is transmission ALWAYS in 3rd gear?**	Yes ▶ No ▶	GO to TD11. If symptom is "Transmission stays in 3rd gear occasionally", GO to TD20. For all other symptoms, DISREGARD Continuous DTC 634. CLEAR Continuous Memory. RETURN to diagnostic routines to address symptom / other DTCs as necessary.

Pinpoint Test TD10

TEST STEP		RESULT ▶	ACTION TO TAKE
TD11	CHECK FOR IGN START/RUN CIRCUIT VOLTAGE AT TRANSMISSION		
• Key off. • Disconnect 4EAT transmission connector (12-pin at transmission). • Key on. • Measure voltage between IGN START/RUN circuit at transmission vehicle harness connector and chassis ground. • **Is voltage greater than 10.5 volts?** 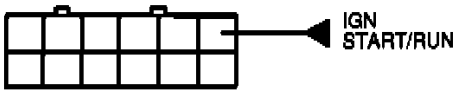 4EAT TRANSMISSION VEHICLE HARNESS CONNECTOR		Yes ▶ No ▶	Key off. GO to TD12. SERVICE open circuit (verify condition of related fuse) RECONNECT transmission connector. RERUN Quick Test.

Pinpoint Test TD12

TEST STEP		RESULT ▶	ACTION TO TAKE
TD12	CHECK FUNCTION OF THE TRANSMISSION SELECT SWITCHES		
• Key off. • Transmission 12-pin connector disconnected. • Disconnect inhibit ("neutral drive") switch (3-pin at transmission). • Refer to Transmission Select Switch State chart Verify that each transmission switch state is correct for each gear selector position. (Open is defined as greater than 10,000 ohms. Closed is defined as less than 5.0 ohms.) • Shift lever to PARK. • **Do the transmission select switches check out OK?**		Yes ▶ No ▶	GO to TD13. GO to TD14.

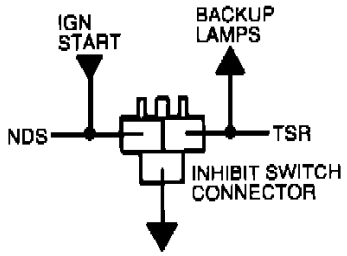

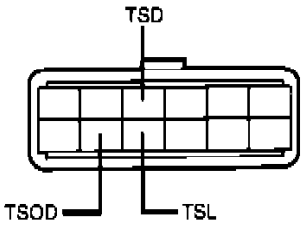

4EAT TRANSMISSION CONNECTOR

Pinpoint Test TD12

TEST STEP		RESULT ▶	ACTION TO TAKE
TD13	CHECK TRANSMISSION SWITCH INPUT VOLTAGES AT BREAKOUT BOX		
	• Key off. • Disconnect Powertrain Control Module (PCM). Inspect for damaged or pushed out pins, corrosion, loose wires, etc. Service as necessary. • Install breakout box or 4EAT Tester, leave PCM disconnected. • Reconnect transmission 12-pin connector and inhibit switch. • Key on, engine off. • Refer to Transmission Range Switch Voltage at breakout box chart at the beginning of this Pinpoint Test. Verify that each Transmission Range switch voltage is correct for each gear selector position (read voltages with the key on, engine off and PCM disconnected). • Shift lever to PARK. • **Do Transmission Range Switch voltages check out OK?**	Yes ▶ No ▶	GO to transmission and drivetrain to check all other possible causes of the symptom. Also GO to diagnostic routines to check all other possible causes. If all checks are OK, REPLACE PCM. SERVICE faulty circuit. **—For circuit voltage always low (less than 0.5 volt) (except PNP Pin 30):** SERVICE open circuit. **—For circuit voltage always greater than 10.5 volts:** SERVICE short to power. **—For circuit voltage that "mirrors" that of another circuit:** SERVICE shorted circuits. REMOVE breakout box. RECONNECT PCM. RERUN Quick Test. RE-EVALUATE symptom.

Pinpoint Test TD13

TEST STEP		RESULT ▶	ACTION TO TAKE
TD14	CHECK ADJUSTMENT/EXTERNAL WIRING OF THE MANUAL LEVER POSITION SWITCH		
	• Key off. • Check transmission connectors, external wiring for open or shorts. Service as necessary. • Check adjustment of manual lever position switch. • **Are the above checks OK?**	Yes ▶ No ▶	REPLACE Manual Lever Position switch. RECONNECT all components. RERUN Quick Test. SERVICE as necessary. RECONNECT all components. RERUN Quick Test.

Pinpoint Test TD14

TEST STEP		RESULT ▶	ACTION TO TAKE
TD20	VISUALLY CHECK EEC-IV HARNESS BETWEEN EEC-IV AND TRANSMISSION		
	• Visually check Transmission Range switch and shift solenoid wires between Powertrain Control Module and transmission. • **Do Transmission Range switch and shift solenoid wires appear OK?**	Yes ▶ No ▶	GO to TD21. SERVICE as necessary. RE-EVALUATE symptom.

Pinpoint Test TD20

TEST STEP		RESULT	ACTION TO TAKE
TD21	CHECK HARNESS AND CONNECTORS FOR INTERMITTENT OPENS OR SHORTS		
	NOTE: This Pinpoint Test Step is included to help isolate a possible intermittent Transmission Range switch circuit concern. ● Key off. ● Disconnect Powertrain Control Module (PCM). Inspect for damaged or pushed out pins, corrosion, loose wires, etc. Service as necessary. ● Install breakout box or 4EAT tester. Leave PCM disconnected. ● Key on. ● Refer to the "4EAT Transmission Range Switch Voltage at EEC-IV Breakout Box" chart at the start of this Pinpoint Test. Connect a test lamp between Test Pin 23 (TRR) and Test Pin 40 (GND). Observe test lamp for an indication of a fault while performing the following (the light will be normally on when the gear selector is in the same position as the circuit being tested (i.e., TRR=Reverse), and off in all other selector positions. A fault will be indicated by the light going off when it should be on (open in Transmission Range switch circuit or IGN START/RUN circuit), or on when it should be off (short to power or the "activated" circuit, switch contact closing): — Shake, wiggle, bend the Transmission Range switch circuit between the PCM and the transmission. — Shake, wiggle, bend the IGN START/RUN circuit. — Lightly tap on the Inhibit Switch to simulate road shock. — After completing testing on the TRR circuit, repeat the testing for the other Transmission Range Switch circuits (TRL, TRD, TROD). ● Key off. ● **Is a fault indicated?**	Yes No	ISOLATE fault and SERVICE as necessary. REMOVE breakout box. RECONNECT all components. RE-EVALUATE symptom. RETURN to diagnostic routines to address this, or any other symptom as necessary.

Pinpoint Test TD21

TD22 - Road Test

The purpose of the road test is to identify an area of concern by monitoring certain controlled parameters while trying to re-create a driveability or MIL light symptom.

Note

A basic working knowledge of the EEC-IV system is critical to effectively analyze road test data.

WARNING

THIS ROAD TEST IS A SUGGESTED BUT OPTIONAL PROCEDURE. ALL APPLICABLE SAFETY PROCEDURES AND TRAFFIC LAWS MUST BE FOLLOWED. IN ORDER FOR A ROAD TEST TO BE PERFORMED IT IS REQUIRED THAT ANOTHER PERSON ACCOMPANY THE DRIVER. THE ACCOMPANYING PERSON CAN MAKE MEASUREMENTS, OBSERVE CHANGES AND RECORD NOTES. IF FOR SOME REASON THIS TEST IS NOT PERFORMED, RETURN TO DIAGNOSTIC ROUTINES FOR OTHER POSSIBLE CAUSES.

Prepare Vehicle For a Road Test

- Disconnect processor 60 pin connector. Inspect for damaged or pushed out pins, corrosion, loose wires, etc. Service as necessary.
- Install breakout box / 4EAT tester and connect processor to breakout box / 4EAT tester.
- Other materials needed; DVOM, pencil, paper, appropriate schematic / pin usage sheet
- Optional equipment:
  - Fuel pressure gauge, manifold vacuum gauge, MAP / BP tester.

Preliminary Power / Ground Checks

- With the key ON and a DVOM referenced to the battery negative post, check the following signals for correct values.

POWERS: KAPWR > 10.5V (Pin 1), VPWR > 10.5V (Pins 37 / 57), VREF 5 ± 1V (Pin 26).
GROUNDS: (all = 0 ± .5V): PWR GND (Pins 40 / 60), SIG RTN (Pin 46), IGN GND (Pin 16).
OPTIONAL GROUNDS: HEGO GND (Pin 49) CSE GND (Pin 20) MAF RTN (Pin 9 or 15).

Obtaining Other Needed Information and Materials Before the Road Test

- Refer to the Transmission Select Switch Voltage at EEC-IV breakout box chart a the beginning of this Pinpoint Test. These are the main signals that will be monitored. The NDS input (Pin 30) should also be monitored (with the NDS referenced to GND, the voltage should be about zero volts in Park or Neutral and greater than 3.0 volts in all other gearshift positions).

- Refer to the Symptom Charts, EEC-IV Monitor Box: Intermittent Fault Diagnosis, looking at the chart(s) that most resembles the vehicle's driveability or MIL light symptom. Before the road test perform the Visual / Mechanical Checks that are listed. Next, list the EEC-IV sensors and actuators in the order given. These are the main signals that will be monitored.
- Refer to the proper Diagnostic Reference Value Sheet. Although these charts were designed for use with the EEC-IV Monitor Box, most of the values can be read using the breakout box and a DVOM (with the DVOM referenced to ground all values in DCV units can be used; other values may also be helpful, ex., MAP Hz using the MAP / BP tester).
- After starting the engine for the road test, enter Engine Running Continuous Monitor Mode
- Drive the vehicle to create the conditions so that the symptom will occur. If the Customer Information Worksheet from DIAGNOSTIC ROUTINES has been completed, this information may help when trying to re-create the symptom.
- When the symptom occurs, the accompanying passenger should observe changes in listed EEC-IV signals. Information about the symptom, operating condition value of the EEC-IV signal or other notes should be recorded onto paper.
- If you are unable to duplicate the symptom, it may still be helpful to verify that the EEC-IV values are in the expected range.

Analyzing the Data

- Once the road test is completed, the results need to be analyzed to locate and service the exact fault which caused the symptom.
- If no problem is identified, return to DIAGNOSTIC ROUTINES for other possible causes of the symptom.

NOTE: **Voltage values are calculated for VREF = 5.0 volts: These values may vary 15 percent due to sensor and VREF variations. Transmission oil temperature must be minimum of 10°C (50°F) before taking transmission oil temperature sensor resistance measurements.**

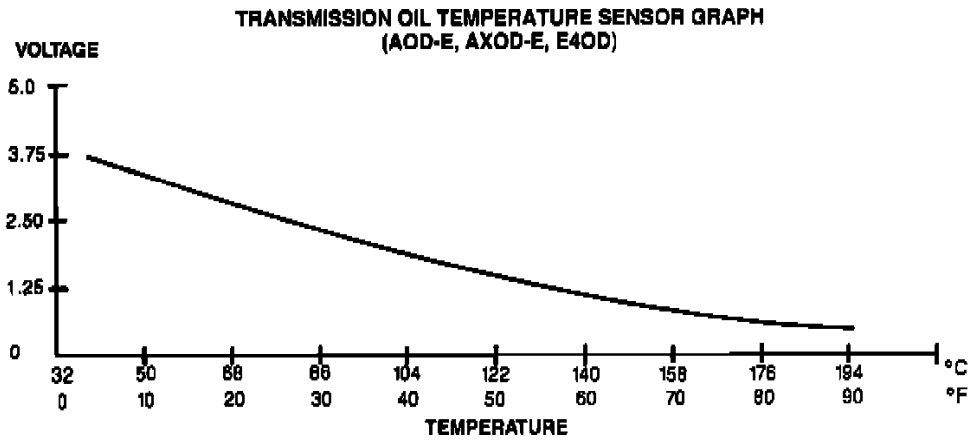

Transmission Oil Temperature Sensor

Temperature		TOT Sensor Values	
°F	°C	Voltage (V)	Resistance (K ohms)
200	95	0.523	2.361
194	90	0.599	2.750
185	85	0.685	3.215
176	80	0.784	3.775
167	75	0.897	4.450
158	60	1.025	5.260
149	65	1.170	6.265
140	60	1.333	7.487
131	55	1.513	8.990
122	50	1.710	10.050
113	45	1.923	13.161
104	40	2.149	16.043
95	35	2.383	19.657
86	30	2.623	24.215
77	25	2.862	30.0
68	20	3.095	37.387
59	15	3.318	46.863
50	10	3.525	59.175
41	5	3.714	75.202
32	0	3.882	96.255

Transmission Oil Temperature Sensor

TE - Testing Notes

NOTE: You should enter this Pinpoint Test only when you have been directed here from Quick Test.

REMEMBER

To prevent the replacement of good components, be aware that the following non-EEC areas may be at fault.

- Transmission fluid level
- Transmission operating temperature
- Ambient Temperature

This Pinpoint Test is intended to diagnose only the following:

- TOT sensor
- Harness circuits: TOT and SIG RTN
- Processor assembly

DESCRIPTION

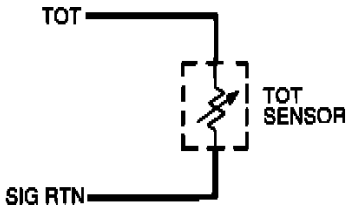

Transmission Oil Temperature Sensor

The Transmission Oil Temperature **(TOT)** sensor is a thermistor that changes resistance in response to temperature. The TOT sensor resistance decreases as the surrounding fluid temperature increases. The resistance variation is converted into a voltage signal and sent to the processor to give an indication of the transmission fluid temperature.

TEST STEP		RESULT ▶	ACTION TO TAKE
TE1	KOEO AND KOER SERVICE CODE 26 OR 636: INCREASE TRANSMISSION OIL TEMPERATURE		
	Service Code 26/636 indicates the output of the Transmission Oil Temperature (TOT) sensor was out of Self-Test range. The sensor output shows a failure occurred at either the low or high end of the acceptable range. The correct range of measurement is from 0.76 to 4.69 volts for Escort/Tracer and from 0.21 to 3.50 volts for all others. Possible causes: — Transmission fluid not at operating temperature. — Sensor resistance out of limits. — Damaged processor. ● Drive vehicle through normal city traffic to bring transmission oil temperature to at least 10°C (50°F). ● Rerun Quick Test. ● **Is Code 26 or 636 present?**	Yes No	▶ GO to TE2. ▶ TOT sensor OK. SERVICE other codes as necessary. RETURN to Quick Test to SERVICE other codes as necessary.

Pinpoint Test TE1

TEST STEP		RESULT ▶	ACTION TO TAKE
TE2	CHECK FOR VREF AT THROTTE POSITION SENSOR		
	● Key off. ● Disconnect processor 60-pin connector. Inspect for damaged or pushed out pins, corrosion, loose wires, etc. Service as necessary. ● Install breakout box and connect processor to breakout box. ● Disconnect TP sensor. ● Key on, engine off. ● Measure voltage between VREF and SIG RTN at the sensor vehicle harness connector. Refer to schematic in Pinpoint Test DH or DQ. ● **Is the voltage between 4.0 and 6.0 volts?**	Yes No	▶ RECONNECT TP sensor. GO to TE3. ▶ GO to Pinpoint Test Step C1.

Pinpoint Test TE2

TEST STEP		RESULT ▶	ACTION TO TAKE
TE3	CHECK TOT SENSOR RESISTANCE CHANGE AS TRANSMISSION OIL TEMPERATURE VARIES		
	• Key off. • Breakout box installed, processor disconnected. • Key on, engine off. • Verify that transmission oil pan is warm to the touch. **IF IT IS TOO HOT TO TOUCH:** — Measure and record TOT sensor resistance between TOT test pin (refer to chart) and Test Pin 46 at breakout box, then let transmission cool down and repeat measurement. The last resistance measurement should be greater than the first. **IF IT IS COLD:** — Measure and record the TOT sensor resistance between TOT test pin (refer to chart) and Test Pin 46 at the breakout box, then reconnect processor and drive vehicle for short time to elevate oil temperature. Disconnect processor and repeat the measurements at the breakout box. The last resistance should be less than the first. • **Did resistance measurement differ and was last measurement within specifications? Refer to applicable chart at the beginning of this Pinpoint Test for the resistance specifications.** **TOT TEST PIN**	Yes ▶ No ▶	REPLACE processor. REMOVE breakout box. RERUN Quick Test. REMOVE breakout box. RECONNECT processor. **For Escort/Tracer:** GO to TE25. **For all others:** REFER to Transmission Section

	AOD-E AXOD-E	E4OD (exept 7.3L diesel)	E4OD (7.3L diesel)	4EAT
TOT TEST PIN	49	42	7	2

Pinpoint Test TE3

TEST STEP		RESULT ▶	ACTION TO TAKE
TE10	KOEO SERVICE CODE 56 OR 637: ATTEMPT TO GENERATE CODE 66 OR 638		
	Service Codes 56 and 637 indicate that the TOT sensor output is greater than Self-Test maximum value of 4.8 volts. Possible causes: — Damaged TOT sensor. — Open harness circuit(s). — Damaged processor. • Key off. • Disconnect transmission bulkhead connector at TOT sensor. Inspect for damaged or pushed out pins, corrosion, loose wires, etc. Service as necessary. • Insert a jumper wire from the TOT circuit to SIG RTN circuit at transmission vehicle harness connector. • Run Key On Engine Off Self-Test. • **Is Code 66 or 638 present?**	Yes ▶ No ▶	REMOVE jumper wire. **For Escort/Tracer:** GO to TE25. **For all others:** REFER to TRANSMISSION SECTION for TOT sensor service. REMOVE jumper wire. GO to TE11.

Pinpoint Test TE10

TEST STEP		RESULT ▶	ACTION TO TAKE
TE11	CHECK CONTINUITY OF TOT AND SIG RTN CIRCUITS		
	• Key off. • Transmission connector disconnected. • Disconnect Powertrain Control Module (PCM). Inspect for damaged or pushed out pins, corrosion, loose wires, etc. Service as necessary. • Install breakout box, leave PCM disconnected. • Measure resistance between TOT circuit at transmission vehicle harness connector and TOT test pin (refer to chart) at breakout box. • Measure resistance between SIG RTN circuit at transmission vehicle harness connector and Test Pin 46 at the breakout box. • **Are both resistances less than 5.0 ohms?**	Yes No	GO to TE12. SERVICE open circuit(s). REMOVE breakout box. RECONNECT all components. RERUN Quick Test.

TOT TEST PIN

	4R70W AODE AXODE (AX4S)	E4OD (except 7.3L diesel)	E4OD (7.3L diesel)	4EAT
TOT TEST PIN	49	42	7	2

Pinpoint Test TE11

TEST STEP		RESULT ▶	ACTION TO TAKE
TE12	CHECK TOT CIRCUIT FOR SHORT TO VPWR		
	• Key off. • Transmission bulkhead connector disconnected. • Breakout box installed, processor disconnected. • Measure resistance between TOT test pin (refer to chart in Test Step TE11) and Test Pins 37 / 57 at breakout box. • **Is each resistance greater than 10,000 ohms?**	Yes No	REPLACE processor. REMOVE breakout box. RECONNECT all components. RERUN Quick Test. SERVICE short circuit(s). REMOVE breakout box. RECONNECT all components. RERUN Quick Test.

Pinpoint Test TE12

TEST STEP		RESULT ▶	ACTION TO TAKE
TE20	KOEO SERVICE CODE 66 OR 638: ATTEMPT TO GENERATE CODE 56 OR 637		
	Service Codes 66 and 638 indicate that TOT sensor output was less than the allowed Self-Test minimum value of 0.57 volts for Escort / Tracer and 0.15 volts for all others. Possible causes: — Damaged TOT sensor. — TOT shorted to ground. — Damaged processor. • Key off. • Disconnect transmission bulkhead connector. Inspect for damaged or pushed out pins, corrosion, loose wires, etc. Service as necessary. • Run Key On Engine Off Self-Test (transmission bulkhead connector remains disconnected for KOEO Self-Test). • **Is Code 56 or 637 present?** NOTE: **Disregard any other Service Codes generated at this time.**	Yes No	**For Escort/Tracer:** GO to TE25. **For all others:** REFER to TRANSMISSION SECTION for TOT sensor service. GO to TE21.

Pinpoint Test TE20

TEST STEP		RESULT ▶	ACTION TO TAKE
TE21	CHECK VREF AT THE THROTTLE POSITION SENSOR		
• Key off. • Disconnect processor 60-pin connector. Inspect for damaged or pushed out pins, corrosion, loose wires, etc. Service as necessary. • Install breakout box and connect processor to breakout box. • Disconnect TP sensor. • Key on, engine off. • Measure resistance between VREF and SIG RTN circuits at TP sensor vehicle harness connector. Refer to schematic in Pinpoint Test DH or DQ. • **Is voltage between 4.0 and 6.0 volts?**		Yes ▶ No ▶	RECONNECT TP sensor. GO to TE22. GO to Pinpoint Test Step C1.

Pinpoint Test TE21

TEST STEP		RESULT ▶	ACTION TO TAKE
TE22	CHECK TOT CIRCUIT FOR SHORT TO GROUND		
• Key off. • Transmission connector disconnected. • Breakout box installed, disconnect PCM. • Measure resistance between TOT test pin (refer to chart) and Test Pins 40, 60 and 46 at the breakout box. • **Is each resistance greater than 10,000 ohms?**		Yes ▶ No ▶	REPLACE PCM. REMOVE breakout box. RECONNECT all components. RERUN Quick Test. SERVICE short circuit. REMOVE breakout box. RECONNECT all components. RERUN Quick Test.

TOT TEST PIN

	4R70W AODE AXODE (AX4S)	E4OD (except 7.3L diesel)	E4OD (7.3L diesel)	4EAT
TOT TEST PIN	49	42	7	2

Pinpoint Test TE22

TEST STEP		RESULT ▶	ACTION TO TAKE
TE25	CHECK TRANSMISSION WIRING		
• Key off. • Check transmission connector / external wiring for opens or shorts. Service as necessary. • Check internal transmission wiring for opens or shorts. • **Is transmission wiring OK?**		Yes ▶ No ▶	REPLACE TOT sensor. REASSEMBLE / RECONNECT all components. RERUN Quick Test. SERVICE as necessary. REASSEMBLE / RECONNECT all components. RERUN Quick Test.

Pinpoint Test TE25

	TEST STEP	RESULT ▶	ACTION TO TAKE
TE90	CONTINUOUS MEMORY CODE(S) 637/638: CHECK HARNESS AND CONNECTORS FOR INTERMITTENT OPENS OR SHORTS		
	Continuous Memory Codes 637 or 638 indicate that sometime during the last 80 warm-up cycles, a fault has been detected in Transmission Oil Temperature circuit. Possible causes: — Intermittent open/short in harness. — Intermittent fault in TOT sensor. ● Key off. ● Disconnect processor 60-pin connector. Inspect for damaged or pushed out pins, corrosion, loose wires, etc. Service as necessary. ● Install breakout box and reconnect processor. ● Connect DVOM between Test Pin 2 and Test Pin 46 at breakout box. ● DVOM on 20 volts scale. ● Key on, engine off. ● Note TOT sensor voltage. ● Perform the following while observing DVOM for a TOT/SIG RTN fault indication (voltage should remain stable or change gradually. A short to ground will be indicated by a reading of zero volts, an open by a reading of five volts and a short to power by a reading of greater than five volts): — Shake, wiggle and bend TOT and SIG RTN wires between transmission and EEC-IV module. ● **Is a fault indicated?**	Yes ▶ No ▶	ISOLATE fault and SERVICE as necessary. REMOVE breakout box. RECONNECT all components. RE-EVALUATE symptom. For further diagnosis using the EEC-IV monitor box, REFER to INTERMITTENT FAULT DIAGNOSIS. If an EEC-IV monitor box is not available, GO to Pinpoint Test Step TD22 (even though TD is the MLPS Pinpoint Test, we will mainly be checking the TOT circuits).

Pinpoint Test TE90

	TEST STEP	RESULT ▶	ACTION TO TAKE
TE100	CONTINUOUS MEMORY DIAGNOSTIC TROUBLE CODE (DTC) 68/657: RERUN KEY ON ENGINE OFF SELF-TEST		
	DTC 68/657 indicates a transmission over temperature condition occurred. Possible causes: — Damaged transmission cooling system. — Excessive loading, e.g. trailer towing. — Damaged clutch. — Improper transmission fluid level. — Damaged transmission connector. — Damaged TOT sensor circuit. ● Key off. ● Disconnect transmission connector. Inspect for damaged or pushed out pins, corrosion, loose wires, etc. Service as necessary and reconnect. ● Run Key On Engine Off Self-Test, record all DTC's. ● **Any transmission related DTC generated?** NOTE: If DTC 68/657 repeats and no other DTC is generated, refer to transmission and drivetrain for transmission over temperature condition.	Yes ▶ No ▶	ADDRESS any transmission related DTC by referring to the DTC charts in Diagnostic Routines REFER to transmission and drivetrain for over temperature condition (check clutch transmission fluid level etc.).

Pinpoint Test TE100

TF - Testing Notes

NOTE: You should enter this Pinpoint Test only when you have been directed here from Quick Test.

REMEMBER

This Pinpoint Test is intended to diagnose only the following:

- Powertrain Control Module **(PCM)** (12A650)
- Harness circuits
- TSS (7M101) or (7H103)

DESCRIPTION

The Transmission Speed Sensor **(TSS)** is a magnetic pickup that sends a signal to the PCM. This signal tells the PCM the transmission rpm. On AXODE (AX4S) applications the TSS is located in the "chain cover" halfshaft area which is on the right side of the transmission. On AODE/4R70W applications the TSS is located on the rear of the transmission case, driver's side.

TEST STEP		RESULT ▶	ACTION TO TAKE
TF1	ENGINE RUNNING DIAGNOSTIC TROUBLE CODE (DTC) 639: CHECK TRANSMISSION SPEED SENSOR (TSS) HARNESS CONNECTOR CONTINUITY		
	DTC 639 indicates frequency or voltage of the TSS is insufficient to the Powertrain Control Module (PCM). Possible causes: — Open circuit in harness. — Short circuit in harness. — Damaged TSS. — Damaged PCM. ● Key off. ● Disconnect TSS. ● Disconnect Powertrain Control Module (PCM). Inspect for damaged or pushed out pins, corrosion, loose wires, etc. Service as necessary. ● Install breakout box, leave PCM disconnected. ● Measure resistance between Test Pin 5 at the breakout box and TSS+ circuit at TSS vehicle harness connector. ● Measure resistance between Test Pin 46 at the breakout box and SIG RTN circuit at the TSS vehicle harness connector. **For 5.0L E-Series:** ● Also measure resistance between Test Pin 29 at the breakout box and SIG RTN circuit at the TSS vehicle harness connector. ● **Is each resistance less than 5.0 ohms?**	Yes ▶ No ▶	GO to TF2. SERVICE open circuit. REMOVE breakout box. RECONNECT all components. RERUN Quick Test.

Pinpoint Test TF1

TEST STEP		RESULT ▶	ACTION TO TAKE
TF2	CHECK TSS OR OSS HARNESS CIRCUIT FOR SHORT TO POWER AND GROUND		
	● Key off. ● TSS or OSS disconnected. ● Breakout box installed, processor disconnected. ● Measure resistance between Test Pin 5 and Test Pins 37/57 at breakout box. ● Measure resistance between Test Pin 5 and Test Pins 40/60 and 46 at breakout box. ● **Is each resistance greater than 10,000 ohms?**	Yes ▶ No ▶	REMOVE breakout box. RECONNECT processor. GO to TF3. SERVICE short circuit(s). REMOVE breakout box. RECONNECT all components. RERUN Quick Test.

Pinpoint Test TF2

TEST STEP		RESULT ▶	ACTION TO TAKE
TF3	CHECK TSS OR OSS RESISTANCE		
	• Key off. • TSS or OSS disconnected. • Measure resistance of TSS sensor. **For AXOD-E Transmission (TSS):** • **Is resistance between 80 and 200 ohms?** **For AOD-E Transmission (OSS):** • **Is the resistance between 450 and 750 ohms?**	Yes ▶ No ▶	**Check internal transmission. If OK, REPLACE processor. REMOVE breakout box. RERUN Quick Test.** REPLACE TSS or OSS. REMOVE breakout box. RERUN Quick Test.

Pinpoint Test TF3

TEST STEP		RESULT ▶	ACTION TO TAKE
TF10	ENGINE RUNNING SERVICE CODE 639: CHECK TSS RESISTANCE		
	Engine Running Service Code 639 indicates an error has been detected in the Turbine Speed Sensor (TSS) input signal. Possible causes: — Open or shorted harness. — Damaged transmission speed sensor. — Damaged processor. • Key off. • Disconnect transmission connector (12-pin at transmission). • Measure resistance between TSS(+) and TSS(-) pins at transmission 12-pin connector. • **Is resistance between 200 and 600 ohms?** 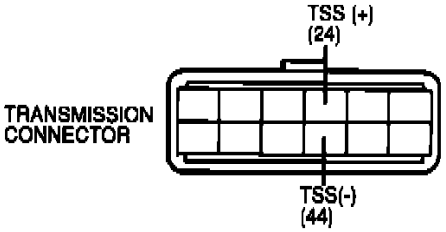 	Yes ▶ No ▶	GO to TF11. INSPECT transmission wiring for opens/shorts. If OK, REPLACE turbine speed sensor. RERUN Quick Test.

Pinpoint Test TF10

TEST STEP		RESULT ▶	ACTION TO TAKE
TF11	CHECK TSS CIRCUITS FOR SHORT TO POWER		
	• Key off. • Transmission 12-pin connector disconnected. • Disconnect processor 60-pin connector. Inspect for damaged or pushed out pins, corrosion, loose wires, etc. Service as necessary. • Key on. • Measure voltage between TSS (+) circuit at the transmission 12 pin vehicle harness connector and chassis ground. • Measure voltage between TSS(-) circuit at the transmission 12 pin vehicle harness connector and chassis ground. • **Are both voltages less than 0.5 volts?**	Yes ▶ No ▶	Key off. GO to TF12. SERVICE short circuit. RECONNECT all components. RERUN Quick Test.

Pinpoint Test TF11

TEST STEP		RESULT ▶	ACTION TO TAKE
TF12	CHECK TSS CIRCUITS FOR SHORT TO GROUND OR EACH OTHER		
	• Key off. • Transmission 12 pin connector disconnected. • Processor disconnected. • Measure resistance between TSS (+) circuit at transmission 12 pin vehicle harness connector and chassis ground. • Measure resistance between TSS(-) circuit at transmission 12 pin vehicle harness connector and chassis ground. • Measure resistance between TSS (+) and TSS(-) circuits at transmission 12 pin vehicle harness connector. • **Are all resistances greater than 10,000 ohms?**	Yes ▶ No ▶	GO to TF13. SERVICE short circuit. RECONNECT all components. RERUN Quick Test.

Pinpoint Test TF12

TEST STEP		RESULT ▶	ACTION TO TAKE
TF13	CHECK TSS CIRCUIT CONTINUITY		
	• Key off. • Transmission 12-pin connector disconnected. • Install breakout box or 4EAT tester. Leave processor disconnected. • Measure resistance between Test Pin 24 and TSS (+) circuit at transmission 12-pin vehicle harness connector. • Measure resistance between Test Pin 44 and TSS(-) circuit at transmission 12-pin vehicle harness connector. • **Are both resistances less than 5.0 ohms?**	Yes ▶ No ▶	GO to TF14. SERVICE open circuit. REMOVE breakout box. RECONNECT all components. RERUN Quick Test.

Pinpoint Test TF13

TEST STEP		RESULT ▶	ACTION TO TAKE
TF14	CHECK PROCESSOR FOR INTERNAL SHORTS		
	• Key off. • Breakout box installed. • Connect processor to breakout box. • Transmission 12-pin connector disconnected. • Measure resistance between Test Pin 24 and Test Pins 44, 37, 57, 40 and 60. • **Is each resistance greater than 500 ohms?**	Yes ▶ No ▶	GO to TF15. REPLACE processor. REMOVE breakout box. RECONNECT all components. RERUN Quick Test.

Pinpoint Test TF14

TEST STEP		RESULT ▶	ACTION TO TAKE
TF15	CHECK TSS OUTPUT		
	• Key off. • Processor connected to breakout box. • Reconnect transmission 12-pin connector. • DVOM on AC scale (to monitor less than 5.0 volts AC). • Start engine. • Measure voltage between Test Pins 24 and 44 at breakout box while varying engine rpm. • **Does AC voltage vary greater than 0.5 volts?**	Yes ▶ No ▶	REPLACE processor. REMOVE breakout box. RERUN Quick Test. REPLACE TSS. REMOVE breakout box. RERUN Quick Test.

Pinpoint Test TF15

TEST STEP		RESULT ▶	ACTION TO TAKE
TF90	CONTINUOUS MEMORY SERVICE CODE 639: COMPLETE TRANSMISSION DRIVE CYCLE, VERIFY CODE		
	Continuous Memory Code 639 indicates that sometime during the last 40 or 80 warm-up cycles, the processor detected an error in the TSS or OSS output signal. Possible causes: — Damaged TSS or OSS. — Damaged harness circuits. — Damaged processor. ● Perform transmission Drive Cycle outlined: **TRANSMISSION DRIVE CYCLE:** — Record and clear continuous memory codes. — Warm engine to operating temperature. — Place gear selector in DRIVE. — Obey all local traffic laws. Accelerate heavily to 35 mph. — Shut the engine off. — After drive cycle is completed, run Key On Engine Off Self-Test and record Continuous Memory service codes displayed. ● **Did Continuous Memory Code 639 repeat?**	Yes ▶ No ▶	GO to TF91. Unable to duplicate and/or identify fault at this time. For further diagnosis using the EEC-IV monitor box, REFER to INTERMITTENT FAULT DIAGNOSIS For all others, CLEAR Continuous Memory

Pinpoint Test TF90

TEST STEP		RESULT ▶	ACTION TO TAKE
TF91	CHECK TSS OR OSS CIRCUIT CONTINUITY		
	● Key off. ● Disconnect processor 60-pin connector. Inspect for damaged or pushed out pins, corrosion, loose wires, etc. Service as necessary. ● Install breakout box, processor disconnected. ● Disconnect TSS or OSS. ● Measure resistance between Test Pin 5 at breakout box and TSS or OSS circuit at sensor vehicle harness connector. ● Measure resistance between Test Pin 46 at breakout box and SIG RTN at the TSS or OSS vehicle harness connector. ● **Is each resistance less than 5.0 ohms?**	Yes ▶ No ▶	GO to TF92. SERVICE open circuit. REMOVE breakout box. RECONNECT all components. REPEAT Test Step TF90 to verify elimination of code.

Pinpoint Test TF91

TEST STEP		RESULT ▶	ACTION TO TAKE
TF92	CHECK TSS OR OSS CIRCUITS FOR SHORT TO POWER OR GROUND		
	● Key off. ● TSS or OSS disconnected. ● Breakout box installed, processor disconnected. ● Measure resistance between Test Pin 5 and Test Pin 37/57 at breakout box. ● Measure resistance between Test Pin 5 and Test Pins 40/60 and 46 at breakout box. ● **Is each resistance greater than 500 ohms?**	Yes ▶ No ▶	GO to TF93. SERVICE short circuit. REMOVE breakout box. RECONNECT all components. REPEAT Test Step TF90 to verify elimination of code.

Pinpoint Test TF92

TEST STEP		RESULT	ACTION TO TAKE
TF93	CHECK TSS OR OSS RESISTANCE • Key off. • TSS or OSS disconnected. • Measure resistance of TSS or OSS. • **For AXOD-E Transmission (TSS):** — **Is the resistance between 80 and 200 ohms?** • **For AOD-E Transmission (OSS):** — **Is the resistance between 450 and 750 ohms?**	Yes No	REMOVE breakout box. REPLACE processor. RECONNECT TSS or OSS. REPEAT Test Step TF90 to verify elimination of code. REPLACE TSS or OSS. REMOVE breakout box. REPEAT Test Step TF90 to verify elimination of code.

Pinpoint Test TF93

TEST STEP		RESULT	ACTION TO TAKE
TF95	CONTINUOUS MEMORY DIAGNOSTIC TROUBLE CODE (DTC) 639: CHECK TSS WIRING Continuous Memory DTC 639 indicates that sometime during the last 80 warm-up cycles an error was detected in the Transmission Speed Sensor (TSS) input signal. Possible causes: — Intermittent open or shorted harness. — Intermittent fault in Transmission Speed Sensor. — **Transmission fluid drained and refilled (if, within one minute of the first start after a transmission fluid change, the vehicle is put in gear, a Continuous Memory DTC 639 could be set due to an insufficient time for the new transmission fluid to fill all the "cavities".** • Key off. • Visually check the TSS wires for obvious concerns. Service as necessary. • Disconnect Powertrain Control Module (PCM). Inspect for damaged or pushed out pins, corrosion, loose wires, etc. Service as necessary. • Install breakout box. Connect PCM to breakout box. • DVOM to 20 volts scale. • Connect DVOM between Test Pin 24 and Test Pin 44 at breakout box. • Start engine. • Observe DVOM for a fault indication while performing the following (the voltage should remain stable. A fault will be indicated by the voltage becoming erratic or dropping to zero): **CAUTION: While performing this Diagnostic Test Mode (DTM), use caution not to touch any moving engine parts.** — Shake, wiggle, bend the TSS (+) and TSS(-) circuits from the transmission to the PCM. — Lightly shake and tap the transmission connector, EEC-IV connector and other related harness connectors. • **Is a fault indicated?**	Yes No	ISOLATE fault and SERVICE as necessary. CLEAR Continuous Memory RERUN Quick Test. Key off. GO to TF96.

Pinpoint Test TF95

TEST STEP		RESULT ▶	ACTION TO TAKE
TF96	CHECK PROCESSOR AND HARNESS CONNECTORS • Key off. • Disconnect the transmission 12-pin connector and all other connectors related to the TSS one at a time. Inspect the connectors for damaged or pushed out pins, corrosion, loose wires, etc. Reconnect each connector after inspection. • Are connectors and terminals OK?	Yes ▶ No ▶	For further diagnosis using the EEC-IV monitor box, REFER to INTERMITTENT FAULT DIAGNOSSIS If an EEC-IV monitor box is not available, GO to TF97. SERVICE as necessary. RECONNECT all connectors/ components. RERUN Quick Test.

Pinpoint Test TF96

TF97 - Road Test

The purpose of the road test is to identify an area of concern by monitoring certain controlled parameters while trying to re-create a driveability or MIL light symptom.

NOTE: A basic working knowledge of the EEC-IV system is critical to effectively analyze road test data.

WARNING: This road test is a suggested but optional procedure. All applicable safety procedures and traffic laws must be followed. In order for a road test to be performed it is required that another person accompany the driver. The accompanying person can make measurements, observe changes and record notes. If for some reason this test is not performed, return to diagnostic routines for other possible causes.

PREPARE VEHICLE FOR A ROAD TEST

- Disconnect processor 60 pin connector. Inspect for damaged or pushed out pins, corrosion, loose wires, etc. Service as necessary.
- Install breakout box/4EAT tester and reconnect processor to breakout box/4EAT tester.
- Other materials needed; DVOM, pencil, paper, appropriate schematic/pin usage sheet
- Optional equipment:
  - Fuel pressure gauge, manifold vacuum gauge, MAP/BP tester.

PRELIMINARY POWER/GROUND CHECKS

- With the key ON and a DVOM referenced to the battery negative post, check the following signals for correct values.

  POWERS: KAPWR>10.5V (Pin 1), VPWR>10.5V (Pins 37/57), VREF 5±1V (Pin 26).

  GROUNDS: (all = 0±.5V): PWR GND (Pins 40/60), SIG RTN (Pin 46), IGN GND (Pin 16).

  OPTIONAL GROUNDS: HEGO GND (Pin 49), CSE GND (Pin 20) MAF RTN (Pin 9 or 15).

OBTAINING OTHER NEEDED INFORMATION AND MATERIALS BEFORE THE ROAD TEST

- Refer to the Symptom Charts, EEC-IV Monitor Box: Intermittent Fault Diagnosis, looking at the chart(s) that most resembles the vehicle's driveability or MIL light symptom. Before the road test perform the Visual/Mechanical Checks that are listed. Next, list the EEC-IV sensors and actuators in the order given. These are the main signals that will be monitored.
- Refer to the proper Diagnostic Reference Value Sheet in Specifications.
  Although these charts were designed for use with the EEC-IV Monitor Box, most of the values can be read using the breakout box and a DVOM (with the DVOM referenced to ground all values in DCV units can be used; other values may also be helpful, ex., MAP Hz using the MAP/BARO tester). Also refer to Graphs and Charts.
- After starting the engine for the road test, enter Engine Running Continuous Monitor Diagnostic Test Mode.
- Drive the vehicle to create the conditions so that the symptom will occur. If the Customer Information Worksheet has been completed, this information may help when trying to re-create the symptom.
- When the symptom occurs, the accompanying passenger should observe changes in listed EEC-IV signals. Information about the symptom, operating condition value of the EEC-IV signal or other notes should be recorded onto paper.

- If you are unable to duplicate the symptom, it may still be helpful to verify that the EEC-IV values are in the expected range.

ANALYZING THE DATA

- Once the road test is completed, the results need to be analyzed to locate and service the exact fault which caused the symptom (if, for example, a Continuous Memory Diagnostic Trouble Code 639 is set again and the TSS signal stayed within specification, the PCM would be suspect; if the signal went out of specification, the harness or sensor would be suspect).

- If no problem is identified, return to Diagnostic Routines for other possible causes of the symptom.

TG - Testing Notes

NOTE: You should enter this Pinpoint Test only when you have been directed here from Diagnostic Routines.

REMEMBER

To prevent the replacement of good components, be aware that the following non-EEC areas may be at fault:

- Other aftermarket modifications

- Incorrect transmission fluid level

- Transmission operating temperature

- Engine operating temperature

- Ambient temperature

- Faulty connections

- Engine Sensors (i.e. TP Sensor)

The transmission solenoids and the MLP sensor are not analyzed in this Pinpoint Test, but are analyzed in the transmission section.

This Pinpoint Test is intended to diagnose only the following:

- Harness Circuits: CCS, SS1, SS2, SS3, EPC, TCC, TOT and MLP

- Powertrain Control Module **(PCM)** (12A650)

TEST STEP	RESULT ▶	ACTION TO TAKE
TG90 PERFORM DRIVE CYCLE TEST		
• Run Key On Engine Off Self-Test and record all Continuous Memory DTCs displayed. • Clear Continuous Memory NOTE: **Obey all traffic laws.** • **AX4S (AXODE) Drive Cycle (except 3.2L SHO):** — Gear position in OVERDRIVE range, moderately accelerate from stop to 50 MPH. This allows transmission to shift into fourth gear. Hold speed and throttle steady for a minimum of 15 seconds. — With transmission in fourth gear and holding speed and throttle opening steady, lightly apply and release brake. Then hold speed and throttle steady for at least five seconds. — Brake to a stop and remain stopped for a minimum of 20 seconds. Repeat drive cycle at least five times. • **4R70W, AODE, E4OD and 3.2L SHO Drive Cycle:** — Gear position in DRIVE range, press the Transmission Control Switch (TCS) (the Transmission Control Indicator (TCIL) should light) and moderately accelerate from stop to 40 mph. This will allow the transmission to shift into third gear. Hold speed and throttle opening steady for a minimum of 15 seconds (30 seconds for altitudes above 4000 feet). — Press TCS (the TCIL should turn off) and accelerate from 40 mph to 50 mph. This will allow the transmission to shift into fourth gear. Hold speed and throttle steady for a minimum of 15 seconds. — With transmission in fourth gear and maintaining steady speed and throttle opening, lightly apply and release brake (to operate stop lamps). Then hold speed and throttle steady for at least an additional five seconds. — Brake to a stop and remain stopped for a minimum of 20 seconds with transmission in drive. Repeat drive cycle at least five times. • Rerun Key On Engine Off Self-Test and record all Continuous Memory DTCs. — **Are pass codes present in Continuous Memory (any code 10-11/111)?**	Yes ▶ No ▶	**Unable to duplicate fault at this time; For further diagnosis using EEC-IV Monitor Box or Scan Tool, REFER to** intermmittent fault diagnosis. **If further diagnosis is not performed, then CLEAR Continuous Memory** diagnotic routines **and REFER to** transmission and drivetrain **for possible internal transmission damage.** **For DTC 99/624, 651 or 67/634:** GO to **TG91** **For DTC 29/452:** GO to **DS1** (E/F Series Bronco) or GO to **DP1** (for all other vehicles). **For any other DTC:** GO to **TG92**.

Pinpoint Test TG90

TEST STEP		RESULT	ACTION TO TAKE
TG91	CHECK CIRCUIT FOR INTERMITTENT FAULT IN HARNESS AND CONNECTORS.		
	DTC 99/624 and 651 indicates an Electronic Pressure Control (EPC) circuit failure. Code 67/634 indicates the Manual Lever Position Sensor (MLP) voltage is higher or lower than expected. Possible causes — Damaged harness connector. — Damaged EPC solenoid. — Damaged MLP sensor. — Intermittent harness continuity. — Damaged PCM connector pins. • Key off. • Disconnect Powertrain Control Module (PCM). Inspect for damaged or pushed out pins, corrosion, loose wires, etc. Service as necessary. • Install breakout box, connect PCM. • Connect DVOM to test pins as indicated: — **For EPC solenoid:** Connect one test lead to EPC signal pin and the other to EPC VPWR pin. Refer to schematics per application for correct EPC test pin. — **For MLP sensor:** Connect one test lead to MLP signal pin and the other test lead to Test Pin 48. Refer to schematics per application for correct MLP test pin. • Key on, engine off. • Observe DVOM display for indication of a fault while performing the following: NOTE: **In either case, the voltage should remain steady (less than 10.0 volts for the EPC and less than 5.0 volts for the MLP with vehicle in PARK). A changing voltage or one greater than expected is an indication of a fault.** — Shake, wiggle and bend the harness of the component. — Lightly tap on the component connector to simulate a road shock. • **Is a fault indicated?**	Yes ▶ No ▶	ISOLATE fault and SERVICE as necessary. CLEAR Continuous Memory RERUN Quick Test. If the concern still exists, REFER to transmission and drivetrain for possible internal transmission damage. GO to transmission and drivetrain. CLEAR Continuous Memory

Pinpoint Test TG91

TEST STEP		RESULT ▶	ACTION TO TAKE
TG92	ENTER KEY ON ENGINE OFF CONTINUOUS MONITOR MODE: CHECK HARNESS CIRCUITS		
	DTC 49/617 indicates an improper 1-2 shift. DTC 59/618 indicates an improper 2-3 shift. DTC 69/619 indicates an improper 3-4 shift. DTC 62/628 indicates excessive converter clutch slip detected. DTC 56/637 indicates transmission oil temperature (TOT) sensor circuit above maximum voltage. DTC 66/638 indicates transmission oil temperature (TOT) sensor circuit below minimum voltage. DTC 645 indicates an incorrect gear ratio was present after first gear was commanded. DTC 646 indicates an incorrect gear ratio was present after second gear was commanded. DTC 647 indicates an incorrect gear ratio was present after third gear was commanded. DTC 648 indicates an incorrect gear ratio was present after fourth gear was commanded. DTC 656 indicates continuous slip error was detected. Possible causes: — Intermittent harness continuity. — Damaged manual lever position sensor. — Damaged shift solenoid. — Worn friction elements. ● Enter Key On Engine Off Continuous Monitor Diagnostic Test Mode (DTM). ● Observe VOM or STAR Tester LED for an indication of a fault while performing the following: — Wiggle, shake or bend a small section of the Powertrain Control Module (PCM) vehicle harness while working toward the dash panel, PCM and transmission connectors. ● **Is a fault indicated?**	Yes ▶	DISCONNECT and INSPECT connector and harness wires. SERVICE as necessary. CLEAR Continuous Memory RERUN Quick Test. If the concern remains. REFER to transmission and drivetrain for possible internal transmission damage.
		No ▶	REFER to transmission and drivetrain

Pinpoint Test TG92

Pinpoint Test Instructions

NOTE: DO NOT perform any of the following Pinpoint Tests unless you are instructed to do so by the Quick Test (On Board Diagnostic Check).

- Each Pinpoint Test assumes that a fault has been detected in the system with direction to enter a specific repair routine.

- Service codes retrieved in Erase and Retest or Key On Engine Running (KOER) test, implies that a hard fault is present and the associated Pinpoint Test should be performed to isolate the cause. If more than one service code is received, always start service with the first code received.

- With the knowledge of the symptom, a close observation can be made of each specified component, by performing the associated Pinpoint Test.

- Before performing Pinpoint Test check:
  Wiring, wiring circuits, and components to the control module.
  Loose connections, corrosion, overheating and physical damage are often cause of failure.

DO NOT:
- Replace any components unless the test result indicates that components should be replaced.
- Measure voltage or resistance at the control module or connect any test lights to it, unless specified to do so by the Pinpoint Test charts.

DO:
- Disconnect solenoids and switches from the harness before measuring for continuity, resistance, or energizing with a power source.
- Follow each step in order, starting from the first step in the appropriate test.
- Follow each step until the fault is located.
- Erase codes and perform Quick Test to insure any repairs made are effective.

AN OPEN CIRCUIT is defined as any resistance reading obtained greater than 10,000 ohms, unless otherwise specified.

A SHORT CIRCUIT is defined as any resistance reading obtained of less than 5 ohms, unless otherwise specified.

BARO Test Notes

Enter this Pinpoint Test only when trouble code 14 is received in Quick Test steps 5 or 6, or when Quick Test 11 directs you here.

This test is only intended to diagnose the BARO circuit.

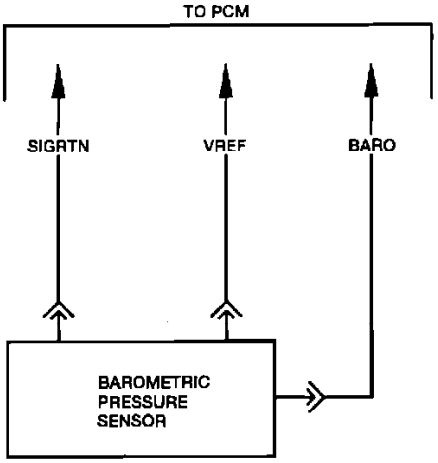

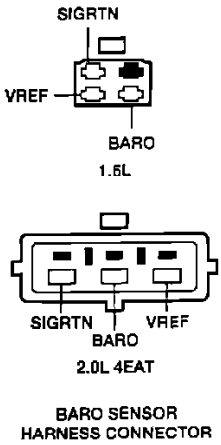

BARO Pinpoint Test Schematic

1.6L

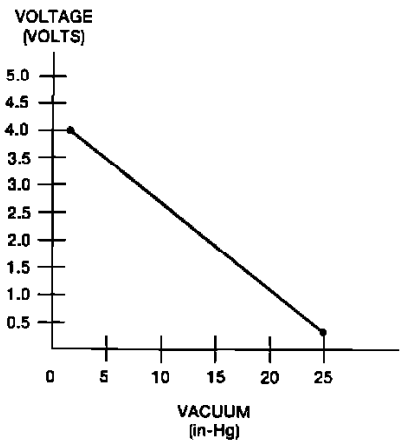

Voltage (Volts)		Vacuum in-Hg	Vacuum kPa
3.84	±0.58	0	0
3.36	±0.50	5	16.7
2.66	±0.40	10	33.7
1.93	±0.29	15	50.7
1.26	±0.19	20	67.7
0.58	±0.09	25	84.7

A14348-B

2.0L 4EAT

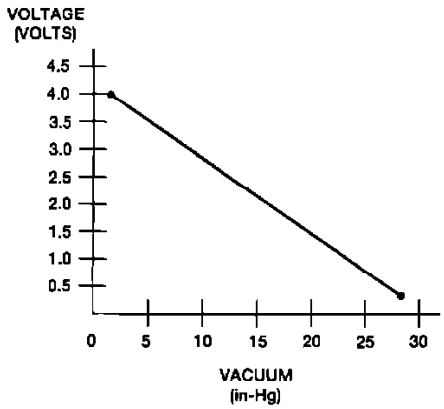

Voltage (Volts)	Vacuum in-Hg	Vacuum mm-Hg
3.9	0.0	0.0
3.6	3.94	10.0
3.1	7.87	20.0
2.5	11.81	30.0
2.0	15.75	40.0
1.5	19.69	50.0
.9	23.62	60.0
.4	27.56	70.0

NOTE: VOLTAGE MAY VARY BY ± 15%

A16534-B

BARO Data Sheet

CIRCUIT DATA SHEET

Engine	Circuit	PCM Pin	BOB Pin	Wire Color
1.6L	BARO	2H	45	BL/O
	VREF	2A	26	W/BK
	SIGRTN	2C	46	BL/Y
2.0L 4EAT	BARO	2G	45	BL
	VREF	2I	26	P
	SIGRTN	3D	46	BK/BL

BARO Circuit Data

BARO1	CHECK BARO INPUT VOLTAGE TO PCM		
	• Key OFF. • Install breakout box (connect PCM). • Remove dust cover from barometric pressure sensor and connect Rotunda Vacuum Tester 021-00014 or equivalent. • Key ON. • Measure the voltage between Test Pins BARO and SIGRTN with vacuum applied as indicated on Data Sheet. • Compare the voltage readings to Data Sheet. • **Are the voltage readings OK?**	Yes ▶ No ▶	BARO circuit OK. If directed here from Quick Test Step QT11, then RETURN to Diagnostic Routines, otherwise REPLACE the PCM. GO to BARO2.

Pinpoint Test BARO1

BARO2	CHECK VREF AND SIGRTN AT BARO SENSOR		
	• Key OFF. • Disconnect the barometric pressure sensor connector. • Key ON. • Measure the voltage between terminals VREF and SIGRTN at the barometric pressure sensor harness connector. • **Is the voltage between 4.5 and 5.5 volts?**	Yes No	▶ GO to BARO3. ▶ GO to EEC Pinpoint Test VREF.

Pinpoint Test BARO2

BARO3	CHECK BARO WIRE TO PCM		
	• Key OFF. • Install breakout box (leave PCM disconnected). • Disconnect the barometric pressure sensor connector. • Measure the resistance of the BARO wire between Test Pin BARO and the BARO terminal at the barometric pressure sensor harness connector. • Measure the resistance of the BARO wire between Test Pin BARO and ground. • **Is the resistance less than 5 ohms between Test Pin BARO and the BARO terminal at the harness connector, and greater than 10,000 ohms between Test Pin BARO and ground?**	Yes No	▶ REPLACE the barometric pressure sensor. ▶ SERVICE the BARO wire.

Pinpoint Test BARO3

CID - Testing Notes and Test Schematic

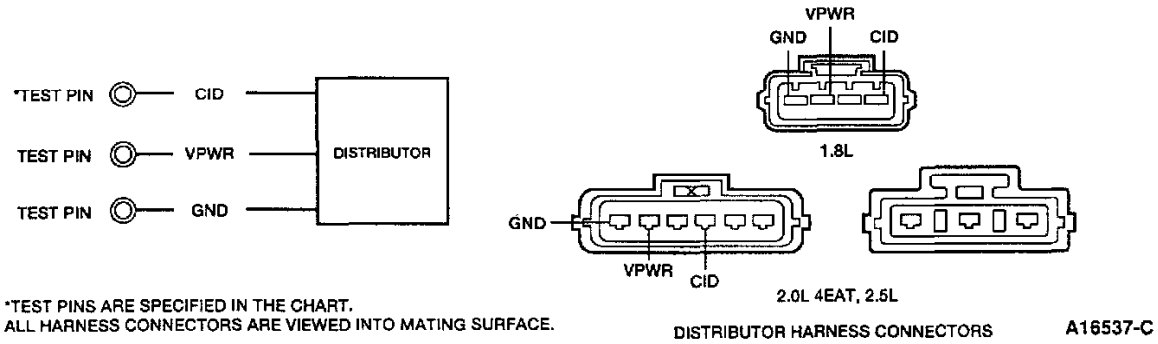

CID Test Schematic

Enter this pinpoint test only when trouble code 03 is received in Quick Test steps 5 or 6, or when Quick Test 11 directs you here.

This test is only intended to diagnose the CID circuit.

CIRCUIT DATA SHEET

Engine	Circuit	PCM Pin	BOB Pin	Wire Color
1.8L MTX	CID VPWR GND	2G 1B 2C	24 37, 57 16	Y/BL W/R BK/LG
1.8L 4EAT	CID VPWR GND	2J 1B 3C	27 37, 57 49	Y/BL W/R BK/LG
2.0L 4EAT	CID VPWR GND	2B 1B, 1U 3C	4 37, 57 16	LG/W R/BK BK/R
2.5L	CID VPWR GND	3G 1B 3C	6 37, 57 49	BL/P R/BK BK/R

CID Circuit Data

TEST STEP		RESULT ▶	ACTION TO TAKE
CID1	CHECK CID SIGNAL		
	• Key OFF. • Install breakout box (connect PCM). • Measure the voltage at Test Pin CID while bumping starter. • **Does the voltage alternate between approximately 0 volts and 5 volts?**	Yes ▶ No ▶	CID circuit OK. If sent to this test by Quick Test Step QT11, RETURN to Diagnostic Routines. Otherwise, REPLACE the PCM. GO to CID2.

Pinpoint Test CID1

CID2	CHECK VPWR TO DISTRIBUTOR		
	• Key OFF. • Disconnect the distributor connector. — 1.8L 4-pin connector — 2.0L 4EAT 6-pin connector — 2.5L 6-pin connector • Key ON. • Measure the voltage at the VPWR wire on the distributor harness connector. • **Is the voltage greater than 10 volts?**	Yes ▶ No ▶	GO to CID3. GO to EEC Pinpoint Test VPWR. If VPWR is OK, SERVICE VPWR wire to distributor.

Pinpoint Test CID2

CID3	CHECK GROUND AT DISTRIBUTOR		
	• Key OFF. • Disconnect the distributor connector. — 1.8L 4-pin connector — 2.0L 4EAT 6-pin connector — 2.5L 6-pin connector • Measure the resistance of the GND wire between the distributor harness connector and ground. • **Is the resistance less than 5 ohms?**	Yes ▶ No ▶	GO to CID4. SERVICE the distributor GND wire.

Pinpoint Test CID3

TEST STEP		RESULT ▶	ACTION TO TAKE
CID4	CHECK CID WIRE FOR OPEN		
	• Key OFF. • Install breakout box (leave PCM disconnected). • Disconnect the distributor connector. — 1.8L 4-pin connector — 2.0L 4EAT 6-pin connector — 2.5L 6-pin connector • Measure the resistance of the CID wire between Test Pin CID and the CID wire at the distributor harness connector. • **Is the resistance less than 5 ohms?**	Yes ▶ No ▶	GO to CID5. SERVICE the CID wire for open.

Pinpoint Test CID4

CID5	CHECK CID WIRE FOR SHORT		
	• Key OFF. • Install breakout box (leave PCM disconnected). • Disconnect the distributor connector. — 1.8L 4-pin connector — 2.0L 4EAT 6-pin connector — 2.5L 6-pin connector • Measure the resistance of the CID wire between Test Pin CID and ground. • **Is the resistance greater than 10,000 ohms?**	Yes ▶ No ▶	REPLACE the distributor. SERVICE the CID wire for short.

Pinpoint Test CID5

CKP1 Test Notes and Schematic

Pinpoint Test Schematic

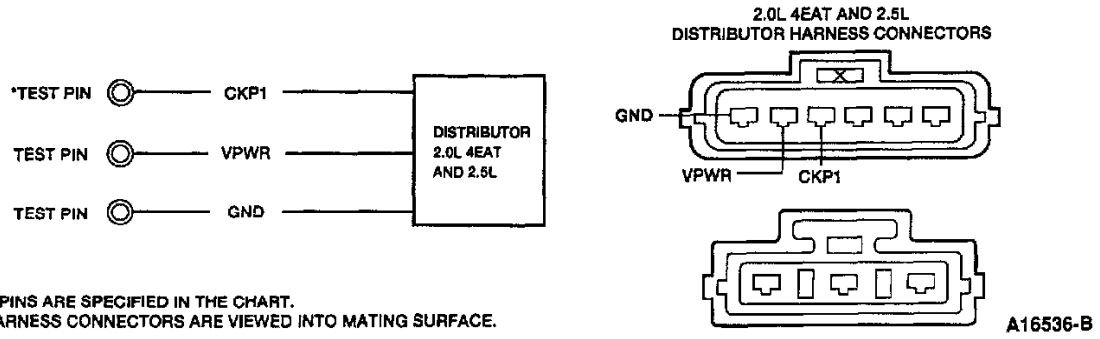

*TEST PINS ARE SPECIFIED IN THE CHART.
ALL HARNESS CONNECTORS ARE VIEWED INTO MATING SURFACE.

Data Sheet

CIRCUIT DATA SHEET

Engine	Circuit	PCM Pin	BOB Pin	Wire Color
2.0L 4EAT	CKP1 VPWR GND	2A 1B, 1U 3C	56 37, 57 16	GN/O R/BK BK/R
2.5L	CKP1 VPWR GND	3E 1B 3C	56 37, 57 49	LG/O R/BK BK/R

Pinpoint Test CKP1 Schematic & Circuit Data

Enter this Pinpoint Test only when trouble code 02 is received in Quick Test steps 5 or 6, or when Quick Test step 11 directs you here.

This test is only intended to diagnose the CKP 1 circuit.

TEST STEP	RESULT ▶	ACTION TO TAKE
CKP1-1 CHECK CKP 1 SIGNAL • Key OFF. • Install breakout box (connect PCM). • Measure the voltage at Test Pin CKP 1 while bumping starter. • **Does the voltage alternate between approximately 0 volts and 5 volts?**	Yes ▶ No ▶	CKP 1 circuit OK. If sent to this test by Quick Test Step QT11, RETURN to Diagnostic Routines. Otherwise, REPLACE the PCM. GO to CKP1-2.

Pinpoint Test CKP1-1

CKP1-2 CHECK VPWR TO DISTRIBUTOR • Key OFF. • Disconnect the 6-pin distributor connector. • Key ON. • Measure the voltage at the VPWR wire on the 6-pin distributor harness connector. • **Is the voltage greater than 10 volts?**	Yes ▶ No ▶	GO to CKP1-3. GO to EEC Pinpoint Test VPWR. If VPWR is OK, SERVICE the VPWR wire to distributor.

Pinpoint Test CKP1-2

CKP1-3	CHECK GROUND AT DISTRIBUTOR		
	• Key OFF. • Disconnect the 6-pin distributor connector. • Measure the resistance of the GND wire between the 6-pin distributor harness connector and ground. • **Is the resistance less than 5 ohms?**	Yes No	▶ GO to CKP1-4. ▶ SERVICE the distributor GND wire.

Pinpoint Test CKP1-3

CKP1-4	CHECK CKP1 WIRE FOR OPEN		
	• Key OFF. • Install breakout box (leave PCM disconnected). • Disconnect the 6-pin distributor connector. • Measure the resistance of the CKP1 wire between Test Pin CKP1 and the CKP1 wire at the 6-pin distributor harness connector. • **Is the resistance less than 5 ohms?**	Yes No	▶ GO to CKP1-5. ▶ SERVICE the CKP1 wire for open.

Pinpoint Test CKP1-4

CKP1-5	CHECK CKP1 WIRE FOR SHORT		
	• Key OFF. • Install breakout box (leave PCM disconnected). • Disconnect the 6-pin distributor connector. • Measure the resistance of the CKP1 wire between Test Pin CKP1 and ground. • **Is the resistance greater than 10,000 ohms?**	Yes No	▶ REPLACE the distributor. ▶ SERVICE the CKP1 wire for short.

Pinpoint Test CKP1-5

DRL - Testing Notes and Schematic

Pinpoint Test Schematic

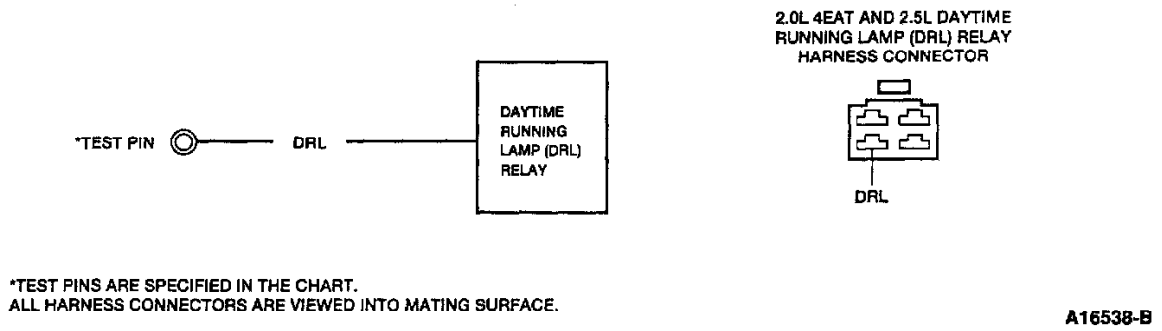

Data Sheet

CIRCUIT DATA SHEET

Engine	Circuit	PCM Pin	BOB Pin	Wire Color
2.0L 4EAT	DRL	1K	28	GN
2.5L	DRL	2L	28	GN

Pinpoint Test DRL Schematic & Circuit Data

Enter this Pinpoint Test only when Quick Test step 11 directs you here.

This test is only intended to diagnose the DRL circuit.

TEST STEP	RESULT ▶	ACTION TO TAKE
DRL1 CHECK DRL INPUT VOLTAGE		
• Key OFF. • Install breakout box (leave PCM disconnected). • Key ON. • Measure the voltage between Test Pin DRL and Test Pin GND under the following conditions:	Yes ▶	DRL circuit OK, RETURN to Diagnostic Routines.
	No (Daytime Running Lamp system works) ▶	SERVICE the DRL wire to PCM.
	No (Daytime Running Lamp system does not work) ▶	GO to Body Electrical
• **Are the voltages OK?**		

Condition	Voltage
Parking brake released	Approx. 0 volts
Parking brake set	Greater than 10 volts

Pinpoint Test DRL1

ECT - Testing Notes and Test Schematic

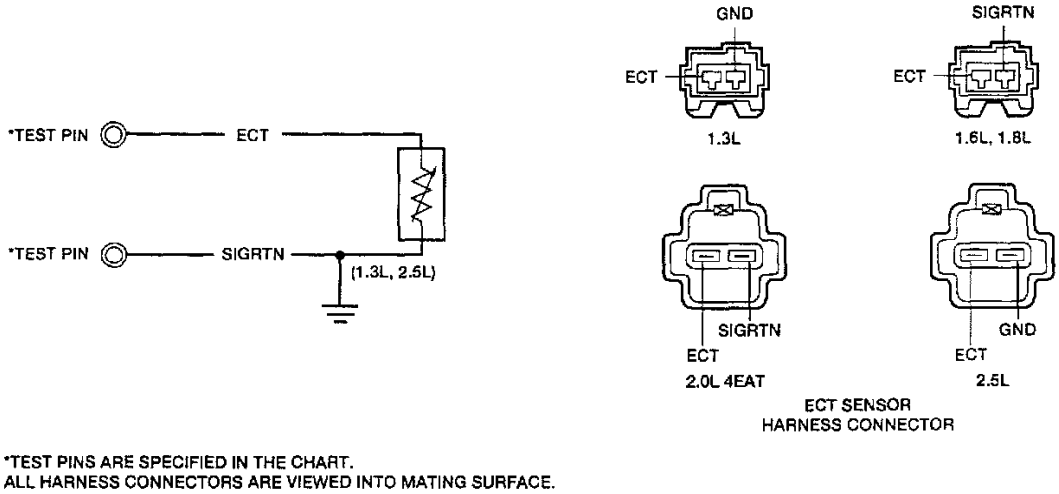

*TEST PINS ARE SPECIFIED IN THE CHART.
ALL HARNESS CONNECTORS ARE VIEWED INTO MATING SURFACE.

Pinpoint Test ECT Schematic

Enter this Pinpoint Test only when trouble code 09 is received in Quick Test steps 5 or 6, or when Quick Test step 11 directs you here.

This test is only intended to diagnose the ECT circuit.

CIRCUIT DATA SHEET

Engine	Circuit	PCM Pin	BOB Pin	Wire Color
1.3L	ECT GND	2Q N/A	7 N/A	R/BL BK
1.6L	ECT SIGRTN	2I 2C	7 46	BL/R BL/Y
1.8L MTX	ECT SIGRTN	2Q 2D	7 46, 49	BL/W BK/W
1.8L 4EAT	ECT SIGRTN	2E 3D	7 46	BL/W BK/W
2.0L 4EAT	ECT SIGRTN	2E 3D	7 46	R/GN BK/BL
2.5L	ECT GND	2E 3D	7 46	R/GN BK/BL

ECT RESISTANCE DATA SHEET

Coolant Temperature °C (°F)	ECT Sensor Resistance (kohms)
-20 (-4)	14.6 - 17.8
20 (68)	2.2 - 2.7
80 (176)	0.25 - 0.35

Pinpoint Test ECT Circuit Data & Sensor Resistance

TEST STEP		RESULT ▶	ACTION TO TAKE
ECT1	CHECK ECT SENSOR RESISTANCE		
	• Run engine until coolant reaches temperatures specified in **Circuit Data**. Monitor temperature at ECT sensor using Rotunda Digital Thermometer 055-00100 or equivalent. • Key OFF. • Install breakout box (leave PCM disconnected). • Measure the resistance between Test Pins ECT and SIGRTN (1.6L, 1.8L, 2.0L 4EAT), or GND (1.3L, 2.5L). • **Are the resistance values within specified range shown on Data Sheet?**	Yes ▶ No ▶	ECT circuit OK. If directed here from Quick Test Step QT11, then RETURN to Diagnostic Routines. Otherwise, REPLACE the PCM. GO to ECT2.

Pinpoint Test ECT1

ECT2	CHECK ECT CIRCUIT		
	• Key OFF. • Install breakout box (leave PCM disconnected). • Disconnect the ECT sensor connector. • Measure the resistance between ECT Test Pin and ECT terminal at the ECT sensor harness connector (resistance should be less than 5 ohms). • Measure the resistance between ECT Test Pin and ground (resistance should be greater than 10,000 ohms). • **Are the resistances OK?**	Yes (1.6L, 1.8L, 2.0L 4EAT) ▶ Yes (1.3L, 2.5L) ▶ No ▶	GO to ECT3. GO to ECT4. SERVICE the ECT wire between PCM and ECT sensor.

Pinpoint Test ECT2

ECT3	CHECK SIGRTN CIRCUIT (1.6L, 1.8L, 2.0L 4EAT)		
	• Key OFF. • Install breakout box (leave PCM disconnected). • Disconnect the ECT sensor connector. • Measure the resistance between SIGRTN Test Pin and SIGRTN terminal at the ECT sensor harness connector. • **Is the resistance less than 5 ohms?**	Yes ▶ No ▶	REPLACE the ECT sensor. SERVICE the SIGRTN wire between PCM and ECT sensor connector.

Pinpoint Test ECT3

ECTF - Test Notes and Schematic

Pinpoint Test Schematic

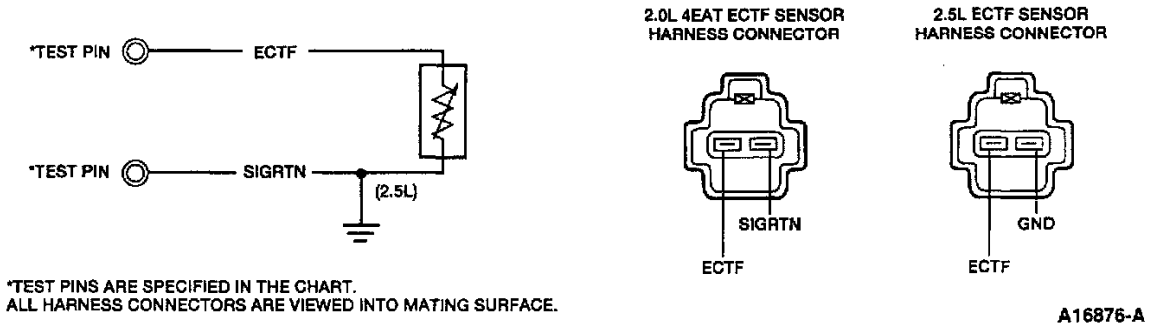

*TEST PINS ARE SPECIFIED IN THE CHART.
ALL HARNESS CONNECTORS ARE VIEWED INTO MATING SURFACE.

Data Sheet

CIRCUIT DATA SHEET

Engine	Circuit	PCM Pin	BOB Pin	Wire Color
2.0L 4EAT	ECTF SIGRTN	2K 3D	50 46	BL/W BK/BL
2.5L	ECTF GND	2G 3D	50 46	R/W BK/BL

Pinpoint Test ECTF Schematic

Enter this Pinpoint Test only when trouble code 69 is received in Quick Test steps 5 or 6, or when Quick Test 11 directs you here.

This test is only intended to diagnose the ECTF circuit.

ECTF RESISTANCE DATA SHEET

Coolant Temperature °C (°F)	ECTF Sensor Resistance (kohms)
91 (196)	1.70 - 1.84
97 (207)	1.42 - 1.53
108 (226)	1.03 - 1.11

ECTF Sensor Resistance Data

TEST STEP	RESULT ▶	ACTION TO TAKE
ECTF1 CHECK ECTF SENSOR RESISTANCE • Run engine until coolant reaches temperatures specified in Data Sheet. Monitor temperature at ECTF sensor using Rotunda Digital Thermometer 055-00100 or equivalent. • Key OFF. • Install breakout box (leave PCM disconnected). • Measure the resistance between Test Pins ECTF and SIGRTN (2.0L 4EAT), or GND (2.5L). • **Are the resistance values within specified range shown on Data Sheet?**	Yes ▶ No ▶	ECTF circuit OK. If directed here from Quick Test Step QT11, then RETURN to Diagnostic Routines. Otherwise, REPLACE the PCM. GO to ECTF2.

Pinpoint Test ECTF1

ECTF2	CHECK ECTF CIRCUIT		
	• Key OFF. • Install breakout box (leave PCM disconnected). • Disconnect the ECTF sensor connector. • Measure the resistance between ECTF Test Pin and ECTF terminal at the ECTF sensor harness connector (resistance should be less than 5 ohms). • Measure the resistance between ECTF Test Pin and ground (resistance should be greater than 10,000 ohms). • **Are the resistance values OK?**	Yes (2.0L 4EAT) Yes (2.5L) No	▶ GO to ECTF3. ▶ GO to ECTF4. ▶ SERVICE the ECTF wire between the PCM and the ECTF sensor.

Pinpoint Test ECTF2

ECTF3	CHECK SIGRTN CIRCUIT (2.0L 4EAT ONLY)		
	• Key OFF. • Install breakout box (leave PCM disconnected). • Disconnect the ECTF sensor connector. • Measure the resistance between SIGRTN Test Pin and SIGRTN terminal at the ECTF sensor harness connector. • **Is the resistance less than 5 ohms?**	Yes No	▶ REPLACE the ECTF sensor. ▶ SERVICE the SIGRTN wire between the PCM and the ECTF sensor connector.

Pinpoint Test ECTF3

EGRT - Test Notes and Schematic

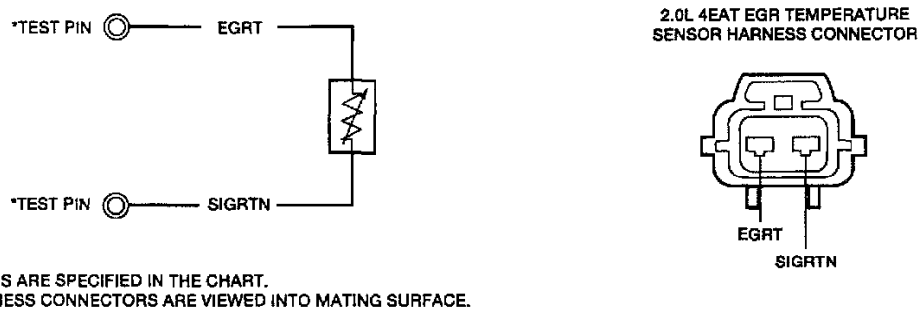

Pinpoint Test EGRT Circuit Diagram

Enter this Pinpoint Test only when trouble code 16 is received in Quick Test steps 5 or 6, or when Quick Test step 11 directs you here.

This test is only intended to diagnose the EGRT circuit.

CIRCUIT DATA SHEET

Engine	Circuit	PCM Pin	BOB Pin	Wire Color
2.0L 4EAT	EGRT SIGRTN	2J 3D	9 46	R BK/BL

EGRT SENSOR RESISTANCE DATA SHEET

Temperature °C (°F)	Resistance (kohms)
20 (68)	182 - 336
30 (85)	112 - 165
41 (105)	41.3 - 47.6
52 (125)	7.5 - 10.5

Pinpoint Test EGRT Circuit Data & Sensor Resistance

TEST STEP		RESULT ▶	ACTION TO TAKE
EGRT1	CHECK EGRT SENSOR RESISTANCE		
	• Monitor the temperature at the EGRT sensor using Rotunda Digital Thermometer 055-00100 or equivalent. • Run engine until the EGRT sensor is at temperature specified in Data Sheet. • Key OFF. • Install breakout box (leave PCM disconnected). • Measure the resistance between Test Pins EGRT and SIGRTN. • **Are the resistances within specified range?**	Yes ▶ No ▶	EGRT circuit OK. If directed here from Quick Test Step QT11, then RETURN to Diagnostic Routines. Otherwise, REPLACE the PCM. GO to EGRT2.

Pinpoint Test EGRT1

EGRT2	CHECK EGRT WIRE		
	• Key OFF. • Install breakout box (leave PCM disconnected). • Disconnect the EGRT sensor connector. • Measure the resistance between the EGRT Test Pin and the EGRT terminal on the EGRT sensor harness connector, (resistance should be less than 5 ohms). • Measure the resistance between EGRT Test Pin and ground, (resistance should be greater than 10,000 ohms). • **Are the resistances OK?**	Yes ▶ No ▶	GO to EGRT3. SERVICE the EGRT wire between the PCM and the EGRT sensor.

Pinpoint Test EGRT2

EGRT3	CHECK SIGRTN WIRE		
	• Key OFF. • Install breakout box (leave PCM disconnected). • Measure the resistance between the SIGRTN Test Pin and the SIGRTN terminal on the EGRT sensor connector. • **Is the resistance less than 5 ohms?**	Yes ▶ No ▶	REPLACE the EGRT sensor. SERVICE the SIGRTN wire between the PCM and the EGRT sensor.

Pinpoint Test EGRT3

HO2S - Test Notes and Schematic

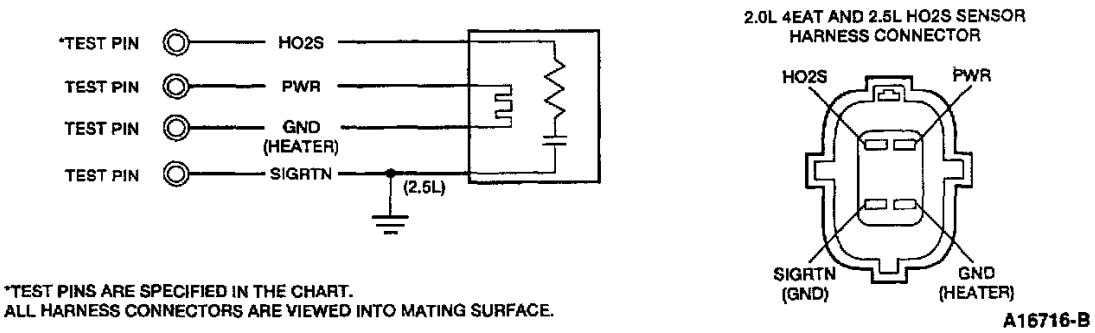

Pinpoint Test HO2S Schematic

Enter this Pinpoint Test only when trouble code 15 or 17 is received in Quick Test 5 or 6, or when Quick Test step 11 directs you here.

This test is only intended to diagnose the HO2S circuit.

CIRCUIT DATA SHEET

Engine	Circuit	PCM Pin	BOB Pin	Wire Color
2.0L 4EAT	HO2S SIGRTN	2C 3D	29 46	BK/Y BK/BL
2.5L	RHO2S LHO2S GND	2C 2D 3D	29 43 46	BK/Y BL/W BK/BL

HO2S VOLTAGE DATA SHEET

Condition	Voltage
Key ON, engine off	0 volts
Idle (cold)	0 volts
Idle (warm)	0 - 1.0 volts (not constant)
Acceleration	0.5 - 1.0 volts
Deceleration	0 - 0.5 volts

Pinpoint Test HO2S Circuit Data & Sensor Voltage

TEST STEP	RESULT ▶	ACTION TO TAKE
HO2S1 CHECK HO2S SENSOR VOLTAGE • Key OFF. • Install breakout box (connect PCM). • Run engine at 2,000-3,000 rpm for 2 minutes or until engine reaches normal operating temperature. • Measure the voltage at Test Pin HO2S. Compare the voltage readings to Data Sheet. • **Are the voltages OK?**	Yes No (2.5L) No (2.0L 4EAT)	GO to HO2S6. GO to HO2S2. GO to HO2S3.

Pinpoint Test HO2S1

HO2S3 CHECK HO2S SENSOR SIGRTN (2.0L 4EAT) • Key OFF. • Install breakout box (leave PCM disconnected). • Disconnect the HO2S sensor connector. • Measure the resistance of the SIGRTN wire between Test Pin SIGRTN and the SIGRTN terminal at the HO2S sensor harness connector. • **Is the resistance less than 5 ohms?**	Yes No	GO to HO2S4. SERVICE the HO2S sensor SIGRTN wire.

Pinpoint Test HO2S3

TEST STEP	RESULT ▶	ACTION TO TAKE
HO2S4 CHECK HO2S WIRE TO PCM FOR OPEN • Key OFF. • Install breakout box (leave PCM disconnected). • Disconnect the HO2S sensor connector. • Measure the resistance of the HO2S wire between Test Pin HO2S and the HO2S terminal at the HO2S sensor harness connector. • **Is the resistance less than 5 ohms?**	Yes No	GO to HO2S5. SERVICE the HO2S wire for open(s).

Pinpoint Test HO2S4

HO2S5 CHECK HO2S WIRE TO PCM FOR SHORT • Key OFF. • Install breakout box (leave PCM disconnected). • Disconnect the HO2S sensor connector. • Measure the resistance of the HO2S wire between Test Pin HO2S and ground. • **Is the resistance greater than 10,000 ohms?**	Yes No	REPLACE the HO2S sensor. SERVICE the HO2S wire for short(s).

Pinpoint Test HO2S5

HO2S6	CHECK HO2S HEATER RESISTANCE		
	• Key OFF. • Disconnect the HO2S sensor connector. • Measure the resistance between the HO2S sensor PWR terminal and "heater" GND terminal on the sensor. • **Is the resistance approximately 6 ohms (at 20°C, 68°F)?**	Yes ▶ No ▶	GO to HO2S7. REPLACE the HO2S sensor.

Pinpoint Test HO2S6

HO2S7	CHECK POWER TO HO2S SENSOR HEATER		
	• Key OFF. • Disconnect the HO2S sensor connector. • Key ON. • Measure the voltage at the PWR terminal on the HO2S sensor harness connector. • **Is the voltage greater than 10 volts?**	Yes ▶ No (2.0L 4EAT) ▶ No (2.5L) ▶	GO to HO2S9. GO to HO2S8. GO to EEC Pinpoint Test VPWR. If VPWR is OK, SERVICE VPWR wire to HO2S sensor.

Pinpoint Test HO2S7

HO2S8	CHECK PWR WIRE TO HO2S SENSOR (2.0L 4EAT)		
	• Key OFF. • Remove the 15A AIR COND fuse located in the interior fuse panel. • Disconnect the HO2S sensor connector. • Measure the resistance of the "BL/BK" wire between the HO2S sensor harness connector and the 15A AIR COND fuse terminal. • **Is the resistance less than 5 ohms?**	Yes ▶ No ▶	REPLACE the 15A AIR COND fuse. If fuse fails again, SERVICE short. SERVICE the "BL/BK" wire.

Pinpoint Test HO2S8

TEST STEP		RESULT ▶	ACTION TO TAKE
HO2S9	CHECK HO2S SENSOR HEATER GROUND		
	• Key OFF. • Disconnect the HO2S sensor connector. • Measure the resistance of the HO2S sensor heater GND wire between the HO2S sensor harness connector and ground. • **Is the resistance less than 5 ohms?**	Yes ▶ No ▶	HO2S circuit OK. If directed here from Quick Test step QT11, then RETURN to Diagnostic Routines. Otherwise, REPLACE the PCM. SERVICE the HO2S sensor heater GND wire.

Pinpoint Test HO2S9

IAT - Test Notes and Schematic

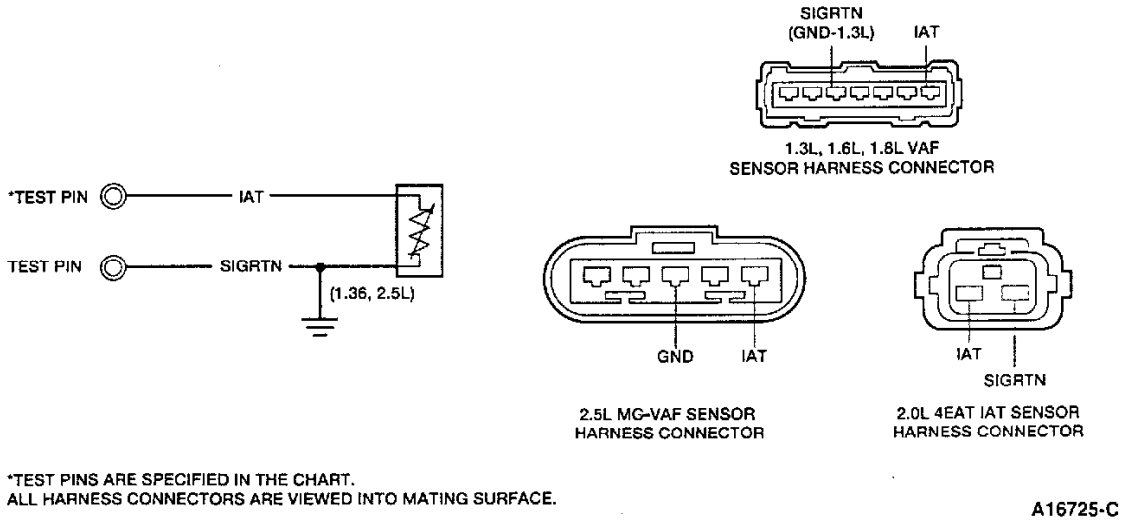

Pinpoint Test IAT Schematic

Enter this Pinpoint Test only when trouble code 11 is received in Quick Test steps 5 or 6, or when Quick Test step 11 directs you here.

This test is only intended to diagnose the IAT circuit.

CIRCUIT DATA SHEET

Engine	Circuit	PCM Pin	BOB Pin	Wire Color
1.3L	IAT GND	2P 2D	45 46, 49	GN/BK BK
1.6L	IAT SIGRTN	2J 2C	25 46, 49	BR/Y BL/Y
1.8L MTX	IAT SIGRTN	2P 2D	45 46, 49	R/BK BK/W
1.8L 4EAT	IAT SIGRTN	2K 3D	25 46	R/BK BK/W
2.0L 4EAT	IAT SIGRTN	2F 3D	25 46	R/W BK/BL
2.5L	IAT GND	2K 3D	25 46	BK/R BK/BL

2.0L 4EAT RESISTANCE DATA SHEET

Temperature °C (°F)	Resistance (kohms)
0 (32)	72.1 - 79.4
13 (55)	54.3 - 58.6
25 (77)	29.7 - 36.3
43 (110)	17.9 - 19.3
85 (185)	3.3 - 3.7

1.3L, 1.6L, 1.8L, 2.5L RESISTANCE DATA SHEET

Temperature °C (°F)	Resistance (kohms)
-20 (-4)	10.0 - 20.0
0 (32)	4.0 - 7.0
20 (68)	2.0 - 3.0
40 (104)	0.9 - 1.3
60 (140)	0.4 - 0.7

Pinpoint Test Circuit Data & Sensor Resistance

TEST STEP	RESULT ▶	ACTION TO TAKE
IAT1 CHECK IAT RESISTANCE • Key OFF. • Install breakout box (leave PCM disconnected). • Access the IAT sensor. — in VAF sensor on 1.3L, 1.6L, 1.8L — in air cleaner assembly on 2.0L 4EAT — in MC-VAF sensor on 2.5L • Monitor the temperature at the IAT sensor using Rotunda Digital Thermometer 055-00100 or equivalent. • Measure the resistance between Test Pin IAT and Test Pin SIGRTN (GND on 1.3L, 2.5L). • Compare the resistance readings to the Data Sheet as IAT sensor is heated using a blow dryer or Rotunda Heat Gun 107-00300 or equivalent. • **Are the resistances OK?**	Yes ▶ No ▶	IAT circuit OK. If directed here from Quick Test Step QT11, then RETURN to Diagnostic Routines. Otherwise, REPLACE the PCM. GO to IAT2.

Pinpoint Test IAT1

TEST STEP		RESULT ▶	ACTION TO TAKE
IAT2	CHECK IAT WIRE FOR OPEN		
	• Key OFF. • Install breakout box (leave PCM disconnected). • Disconnect the following connector. — VAF sensor connector on 1.3L, 1.6L, 1.8L — IAT sensor connector on 2.0L 4EAT — MC-VAF sensor connector on 2.5L • Measure the resistance of the IAT wire between Test Pin IAT and the IAT terminal at the IAT sensor harness connector. • **Is the resistance less than 5 ohms?**	Yes ▶ No ▶	GO to IAT3. SERVICE the IAT wire for open(s).

Pinpoint Test IAT2

IAT3	CHECK IAT WIRE FOR SHORT		
	• Key OFF. • Install breakout box (leave PCM disconnected). • Disconnect the following connector: — VAF sensor connector on 1.3L, 1.6L, 1.8L — IAT sensor connector on 2.0L 4EAT — MC-VAF sensor connector on 2.5L • Measure the resistance of the IAT wire between Test Pin IAT and ground. • **Is the resistance greater than 10,000 ohms?**	Yes (1.3L, 2.5L) ▶ Yes (1.6L, 1.8L, 2.0L 4EAT) ▶ No ▶	GO to IAT4. GO to IAT5. SERVICE the IAT wire for short(s).

Pinpoint Test IAT3

IAT5	CHECK IAT SENSOR SIGRTN (1.6L, 1.8L, 2.0L 4EAT)		
	• Key OFF. • Install breakout box (leave PCM disconnected). • Disconnect the following connector: — VAF sensor connector on 1.6L, 1.8L — IAT sensor connector 2.0L 4EAT • Measure the resistance of the SIGRTN wire between Test Pin SIGRTN and the SIGRTN terminal on the IAT sensor harness connector. • **Is the resistance less than 5 ohms?**	Yes ▶ No ▶	REPLACE the IAT sensor 2.0L or the VAF sensor 1.6L, 1.8L. SERVICE the IAT SIGRTN wire.

Pinpoint Test IAT5

ICM - Test Notes and Schematic

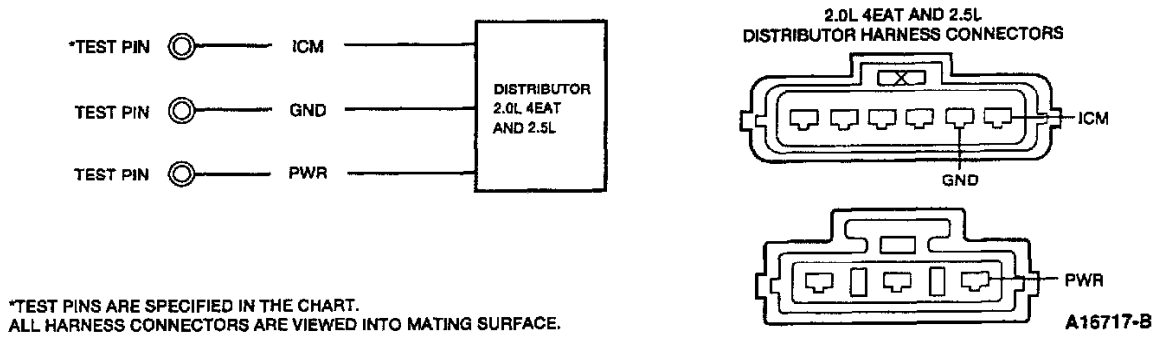

Pinpoint Test ICM Schematic

Enter this Pinpoint Test only when Quick Test step 11, or test step IGN13 in **IGNITION SYSTEM**, directs you here.

This test is only intended to diagnose the ICM circuit.

CIRCUIT DATA SHEET

Engine	Circuit	PCM Pin	BOB Pin	Wire Color
2.0L 4EAT	ICM GND PWR	1I NA NA	36 NA NA	BL/O BK BK/P
2.5L	ICM GND PWR	1G NA NA	36 NA NA	BL/O BK/W BK/P

Pinpoint Test ICM Circuit Data

TEST STEP	RESULT ▶	ACTION TO TAKE
ICM1 CHECK FOR CONTINUOUS SPARK • Key OFF. • Disconnect a spark plug wire. • Connect Rotunda Air Gap Spark Tester D81P-6666-A to the disconnected spark plug wire. • Crank the engine. • **Is a continuous strong blue spark produced while cranking the engine?**	Yes ▶ No ▶	ICM circuit OK, RETURN to Diagnostic Routines. GO to ICM2.

Pinpoint Test ICM1

ICM2 CHECK ICM SIGNAL FROM PCM • Key OFF. • Install breakout box (connect PCM). • Disconnect the 3-pin distributor connector. • Crank the engine. • Measure the voltage between Test Pin ICM and ground. • **Is voltage greater than 0.7 volts?**	Yes ▶ No ▶	GO to ICM3. GO to EEC Pinpoint Tests CID and CKP1. If OK, REPLACE the PCM.

Pinpoint Test ICM2

ICM3 CHECK ICM WIRE FOR OPEN • Key OFF. • Install breakout box (leave PCM disconnected). • Disconnect the 6-pin distributor connector. • Measure the resistance between Test Pin ICM and the ICM terminal at the 6-pin distributor connector. • **Is the resistance less than 5 ohms?**	Yes ▶ No ▶	GO to ICM4. SERVICE the ICM wire for open(s).

Pinpoint Test ICM3

ICM4 CHECK ICM WIRE FOR SHORT • Key OFF. • Install breakout box (leave PCM disconnected). • Disconnect the 6-pin distributor connector. • Measure the resistance between Test Pin ICM and ground. • **Is the resistance greater than 10,000 ohms?**	Yes ▶ No ▶	GO to ICM5. SERVICE the ICM wire for short(s).

Pinpoint Test ICM4

TEST STEP	RESULT ▶	ACTION TO TAKE
ICM5 CHECK GROUND AT DISTRIBUTOR • Key OFF. • Disconnect the 6-pin distributor connector. • Measure the resistance between the GND terminal at the harness connector and ground. • **Is the resistance less than 5 ohms?**	Yes ▶ No ▶	GO to ICM6. SERVICE the distributor GND wire for opens.

Pinpoint Test ICM5

ICM6	CHECK PWR TO DISTRIBUTOR		
	• Key OFF. • Disconnect the 3-pin distributor connector. • Key ON. • Measure the voltage on the PWR terminal at the harness connector. • **Is the voltage greater than 10 volts?**	Yes ▶ No ▶	REPLACE the distributor. SERVICE the PWR wire between the distributor and the ignition switch.

Pinpoint Test ICM6

MAF - Test Notes and Schematic

Pinpoint Test Schematic

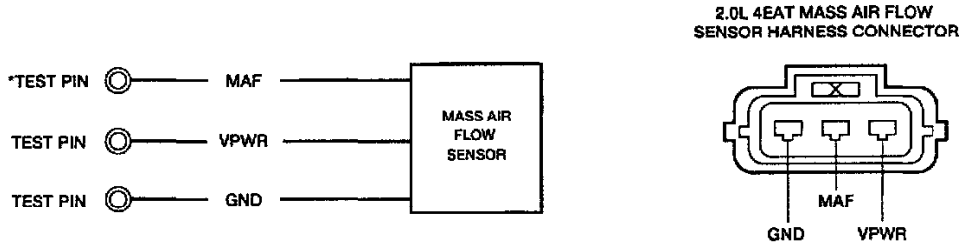

*TEST PINS ARE SPECIFIED IN THE CHART.
ALL HARNESS CONNECTORS ARE VIEWED INTO MATING SURFACE.

A16728-B

Data Sheet

CIRCUIT DATA SHEET

Engine	Circuit	PCM Pin	BOB Pin	Wire Color
2.0L 4EAT	MAF VPWR GND	2L 1B, 1U 3C	27 37, 57 16	BK/R R/BK BK/R

Pinpoint Test MAF Schematic & Circuit Data

Enter this Pinpoint Test only when trouble code 08 is received in Quick Test steps 5 or 6, or when Quick Test 11 directs you here.

This test is only intended to diagnose the MAF circuit.

MAF SENSOR VOLTAGE DATA SHEET

Condition	MAF Voltage (volts)
Key ON	1.0 - 1.5
Engine running	1.5 - 5.0

MAF Sensor Voltage Data

TEST STEP		RESULT ▶	ACTION TO TAKE
MAF1	CHECK MAF SENSOR INPUT VOLTAGE TO PCM		
	• Key OFF. • Install breakout box (connect PCM). • Measure the voltage between Test Pin MAF and Test Pin GND. • Compare the voltages to Voltage Data Sheet under given conditions. • **Are the voltages OK?**	Yes ▶ No ▶	MAF circuit OK. If directed here from Quick Test Step QT11, then RETURN to Diagnostic Routines. Otherwise, REPLACE the PCM. GO to MAF2.

Pinpoint Test MAF1

MAF2	CHECK MAF WIRE FOR OPEN		
	• Key OFF. • Install breakout box (leave PCM disconnected). • Disconnect the MAF sensor connector. • Measure the resistance of the MAF wire between Test Pin MAF and the MAF terminal on the MAF sensor harness connector. • **Is the resistance less than 5 ohms?**	Yes No	▶ GO to MAF3. ▶ SERVICE the MAF wire for open(s).

Pinpoint Test MAF2

MAF3	CHECK MAF WIRE FOR SHORT		
	• Key OFF. • Install breakout box (leave PCM disconnected). • Disconnect the MAF sensor connector. • Measure the resistance of the MAF wire between Test Pin MAF and ground. • **Is the resistance greater than 10,000 ohms?**	Yes No	▶ GO to MAF4. ▶ SERVICE the MAF wire for short(s).

Pinpoint Test MAF3

MAF4	CHECK VPWR AT MAF SENSOR		
	• Key OFF. • Disconnect the MAF sensor connector. • Key ON. • Measure the voltage between MAF sensor harness connector VPWR wire and ground. • **Is the voltage approximately battery voltage?**	Yes No	▶ GO to MAF5. ▶ GO to EEC Pinpoint Test VPWR. If VPWR is OK, SERVICE the VPWR wire to MAF sensor.

Pinpoint Test MAF4

MAF5	CHECK GROUND AT MAF SENSOR		
	• Key OFF. • Disconnect the MAF sensor connector. • Measure the resistance between the MAF sensor harness connector GND wire and ground. • **Is the resistance less than 5 ohms?**	Yes No	▶ REPLACE the MAF sensor. ▶ SERVICE the MAF sensor GND wire.

Pinpoint Test MAF5

CIRCUIT DATA SHEET

Engine	Circuit	PCM Pin	BOB Pin	Wire Color
1.3L	MIL	1E	51	BL/BK
1.6L	MIL	1A	51	Y/BK
1.8L	MIL	1E	51	Y/BK
2.0L 4EAT	MIL	1E	51	BL
2.5L	MIL	1E	51	BL

MIL Circuit Data

MIL - Testing Notes and Schematic

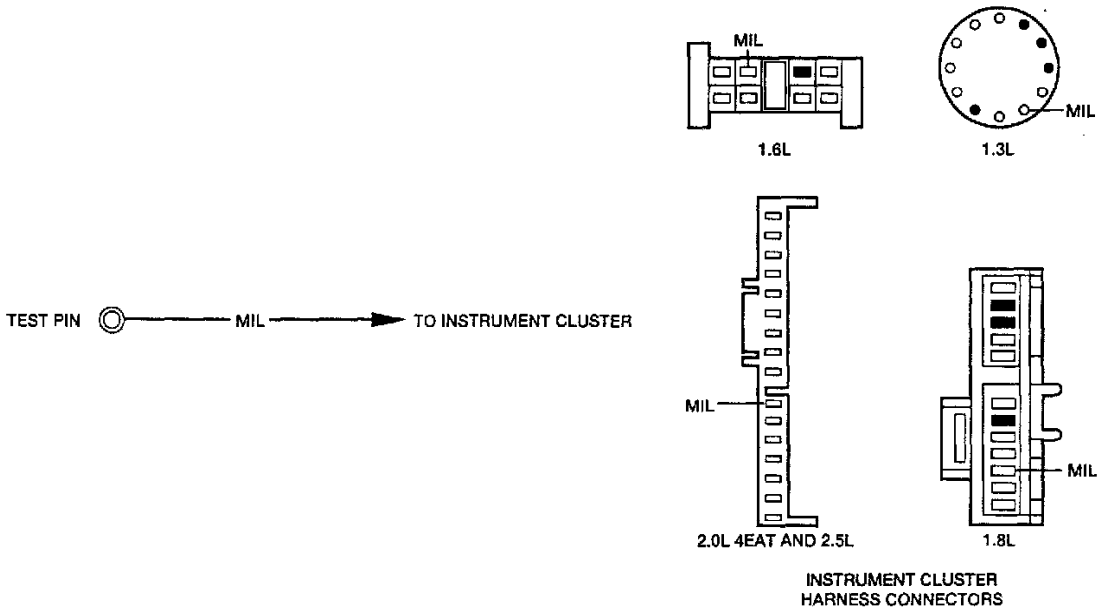

Pinpoint Test MIL Schematic

Enter this Pinpoint Test only when Quick Test directs you here.

This test is only intended to diagnose the MIL circuit.

TEST STEP	RESULT ▶	ACTION TO TAKE
MIL1 CHECK MIL OPERATION		
• Key OFF. • Install breakout box (leave PCM disconnected). • Key ON. • Ground Test Pin MIL. • **Does Malfunction Indicator Lamp (CHECK ENGINE lamp) illuminate?**	Yes ▶ No ▶	MIL circuit OK. If diagnostic trouble codes do not flash on MIL during Quick Test or MIL never comes on, REPLACE the PCM. GO to MIL2.

Pinpoint Test MIL1

MIL2 CHECK MIL BULB		
• Key OFF. • Remove the instrument cluster. • Remove the malfunction indicator lamp (CHECK ENGINE lamp) bulb. • Apply 12 volts between the terminals of the malfunction indicator lamp (CHECK ENGINE lamp) bulb. • **Does the MIL (CHECK ENGINE lamp) illuminate?**	Yes ▶ No ▶	GO to MIL3. REPLACE the malfunction indicator lamp (CHECK ENGINE lamp) bulb.

Pinpoint Test MIL2

MIL3 CHECK MIL WIRE FOR OPEN		
• Key OFF. • Install breakout box (leave PCM disconnected). • Disconnect the instrument cluster connector. — 12-pin connector on 1.3L, 1.8L — 8-pin connector on 1.6L — 16-pin connector on 2.0L 4EAT, 2.5L • Measure the resistance between Test Pin MIL and the MIL terminal at the instrument cluster harness connector. • **Is the resistance less than 5 ohms?**	Yes ▶ No ▶	GO to MIL4. SERVICE the MIL wire for open.

Pinpoint Test MIL3

TEST STEP		RESULT ▶	ACTION TO TAKE
MIL4	CHECK MIL WIRE FOR SHORT		
	• Key OFF. • Install breakout box (leave PCM disconnected). • Disconnect the instrument cluster connector. — 12-pin connector on 1.3L, 1.8L — 8-pin connector on 1.6L — 16-pin connector on 2.0L 4EAT, 2.5L • Measure the resistance between Test Pin MIL and ground. • **Is the resistance greater than 10,000 ohms?**	Yes ▶ No ▶	REPLACE the instrument cluster printed circuit board. SERVICE the MIL wire for short.

Pinpoint Test MIL4

CIRCUIT DATA SHEET

Circuit	Abbrev.	Engine	PCM Pin	BOB Pin	PCM Wire Color	Connection To
Keep Alive Power	KAPWR	1.3L	1A	1	W/R	(Battery +)
		1.6L	3J	1	BL/R	
		1.8L	1A	1	BL/R	
		2.0L 4EAT	1A	1	BL/R	
		2.5L	1A	1	BL/R	
Ground	GND	1.3L	2A	39, 40, 44, 60	BK	Ground
			2B	20	BK	
			2C	16	BK	
			2D	46, 49	BK	
		1.6L	2R	49	BK	
			3A	20	BK	
			3G	40	BK	
		1.8L MTX	2A	39, 40, 44, 60	BK/O	
			2B	20	BK/O	
			2C	16	BK/LG	
		1.8L 4EAT	3A	40, 60	BK/O	
			3B	20	BK/O	
			3C	49	BK/LG	
		2.0L 4EAT	3A	40, 60	BK	
			3B	20	BK	
			3C	16	BK/R	
		2.5L	3A	40, 60	BK	
			3B	20	BK	
			3C	49	BK/R	
			3D	46	BK/BL	
		2.5L MTX	1U	39	BK	
Manual/Automatic Transaxle Applications	MT/AT	1.3L MTX	2J	6	BK	Ground
		1.6L MTX	2R	43	BK	Ground
Canada/California Applications	CAN/CAL	1.8L MTX Canada	2H	51	BK/Y	12 volts
		1.8L MTX Calif.	2H	51	BK	Ground
		1.8L 4EAT Canada	1K	19	BK/Y	12 volts
		1.8L 4EAT Calif.	1K	19	BK	Ground

Pinpoint Test PGC Circuit Data

PGC - Testing Notes and Schematic

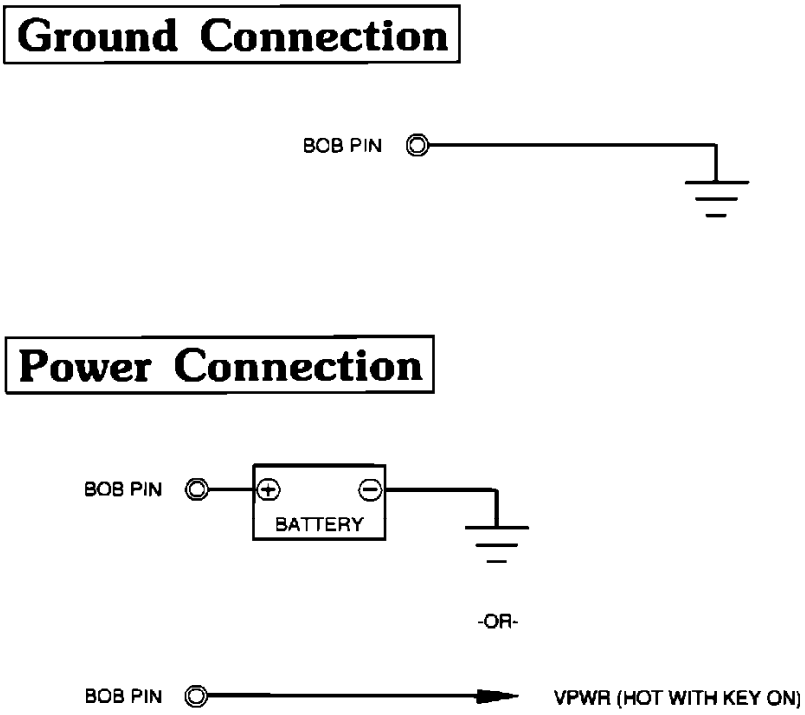

Pinpoint Test PGC Schematic

Enter this Pinpoint Test only when Quick Test step 11, Pinpoint Test VREF or STO, or 4EAT Pinpoint Test VREF directs you here.

This test is only intended to diagnose the KAPWR and GND circuits.

TEST STEP	RESULT ▶	ACTION TO TAKE
PGC1 CHECK VOLTAGE • Key OFF. • Install breakout box (leave PCM disconnected). • Key ON, if checking power other than KAPWR. • Measure the voltage on Test Pin KAPWR. • **Is the voltage approximately battery voltage?**	Yes ▶ No ▶	GO to PGC2. SERVICE the wire in question.

Pinpoint Test PGC1

PGC2 CHECK GROUNDS • Key OFF. • Install breakout box (leave PCM disconnected). • Measure the resistance between GND Test Pin and ground. Repeat for each GND Test Pin to ground. • **Are the resistances less than 5 ohms?**	Yes ▶ No ▶	If sent here from EEC Pinpoint Test VREF or STO or 4EAT Pinpoint Test VREF, REPLACE the PCM. Otherwise, RETURN to Diagnostic Routines. SERVICE the wire in question.

Pinpoint Test PGC2

ROC - Testing Notes and Schematic

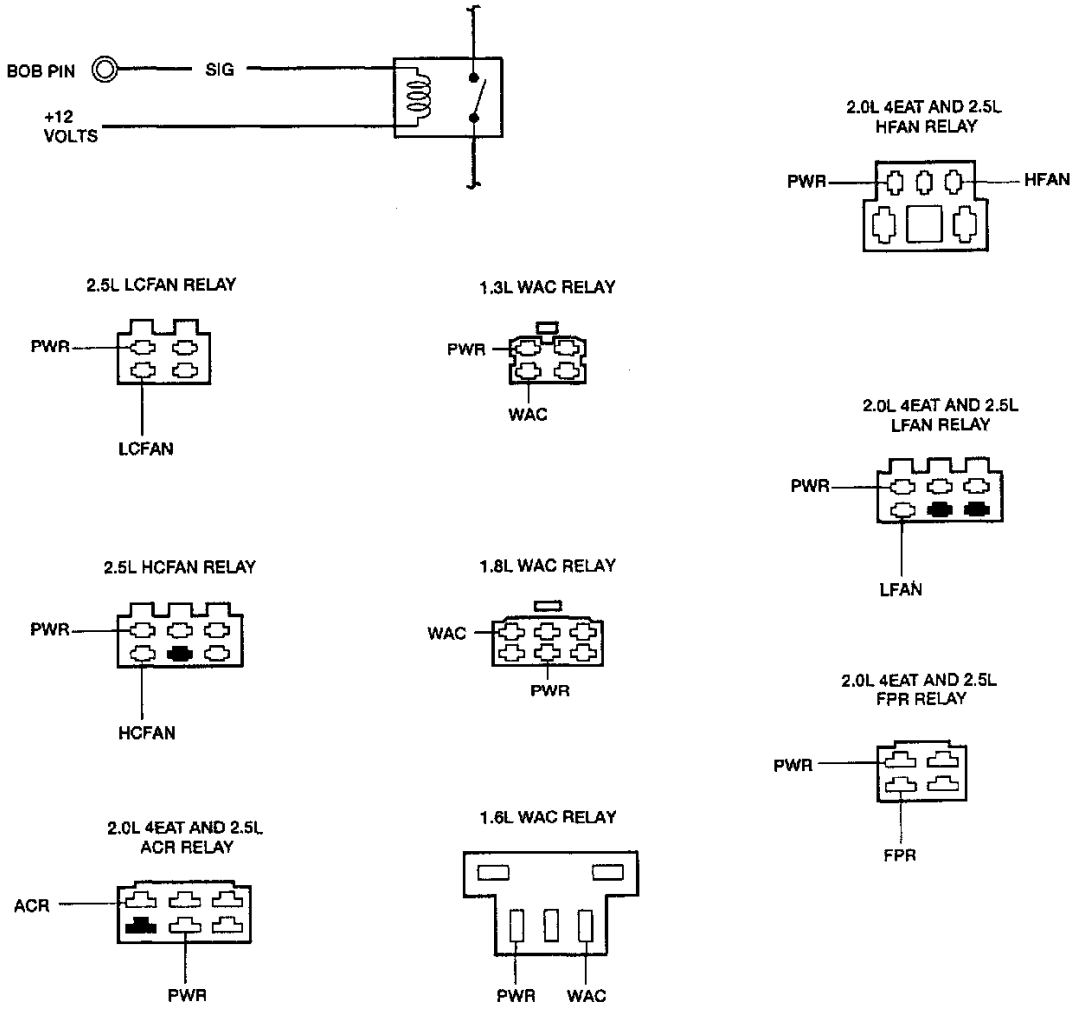

Pinpoint Test ROC Schematic

Enter this Pinpoint Test only when code 68 (HFAN) is received in Quick Test step 5 or 6, or when directed here by Quick Test step 11, or a test procedure.

This test is only intended to diagnose these circuits:

- **ACR (A/C relay)**
- **FPR (fuel pump relay)**
- **HCFAN (high condenser fan relay)**
- **HFAN (high cooling fan relay)**
- **LCFAN (low condenser fan relay)**
- **LFAN (low cooling fan relay)**
- **WAC (wide open throttle A/C cutoff relay)**

CIRCUIT DATA SHEET

Relay (SIG)	Engine	PCM Pin	BOB Pin	Wire Color	Function
ACR (A/C Relay)	2.0L 4EAT 2.5L	1S 1L	14 10	GN/BK GN/BK	PCM grounds ACR wire to turn on A/C system, when A/C is selected.
FPR (Fuel Pump Relay)	2.0L 4EAT 2.5L	3L 3T	8 52B	LG LG	PCM grounds FPR wire to turn on Fuel Pump while cranking engine or while engine is running.
HCFAN (High Condenser Fan Relay)	2.5L	2P	54	BL/GN	PCM grounds HCFAN wire to turn on High Condenser Fan.
HFAN (High Cooling Fan Relay)	2.0L 4EAT 2.5L	3I 2P	54 54	BL/GN BL/GN	PCM grounds HFAN wire to turn on High Cooling Fan.
LCFAN (Low Condenser Fan Relay)	2.5L	3N	53A	BL/O	PCM grounds LCFAN wire to turn on Low Condenser Fan.
LFAN (Low Cooling Fan Relay)	2.0L 4EAT 2.5L	3G 3L	55 55	BK/GN R/W	PCM grounds LFAN wire to turn on Low Cooling Fan.
WAC (Wide-Open Throttle A/C Cutoff Relay)	1.3L 1.8L MTX 1.8L 4EAT	1J 1J 1L	54 54 10	GN/Y BL/BK BL/BK	PCM opens ground to cutoff A/C clutch during start and wide open throttle driving.

Pinpoint Test ROC Circuit Data

TEST STEP	RESULT ▶	ACTION TO TAKE
ROC1 PERFORM RELAY CLICK TEST		
WARNING: FANS WILL OPERATE WHEN HCFAN, HFAN, LCFAN, OR LFAN ARE GROUNDED. • Key OFF. • Install breakout box (leave PCM disconnected). • Locate the relay in question. • Key ON. • Feel and/or listen to relay in question while grounding relay Test Pin. • **Does relay click?**	Yes ▶ No ▶	If sent here from Quick Test Step QT5 or QT6, REPLACE the PCM. If sent here from Quick Test Step QT11, RETURN to Diagnostic Routines. GO to ROC2.

Pinpoint Test ROC1

ROC2 CHECK RELAY WIRE TO PCM FOR OPEN		
• Key OFF. • Install breakout box (leave PCM disconnected). • Disconnect the relay in question. • Measure the resistance between relay Test Pin and relay terminal to PCM at relay harness connector. • **Is the resistance less than 5 ohms?**	Yes ▶ No ▶	GO to ROC3. SERVICE the wire in question for opens.

Pinpoint Test ROC2

TEST STEP	RESULT ▶	ACTION TO TAKE
ROC3 CHECK RELAY WIRE TO PCM FOR SHORT		
NOTE: When checking HFAN or HCFAN relays you must disconnect both the HFAN relay and the HCFAN relay. • Key OFF. • Install breakout box (leave PCM disconnected). • Disconnect the relay in question. • Measure the resistance between relay Test Pin and ground. • **Is the resistance greater than 10,000 ohms?**	Yes ▶ No ▶	GO to ROC4. SERVICE the wire in question for shorts.

Pinpoint Test ROC3

ROC4	CHECK POWER TO RELAY IN QUESTION		
	• Key OFF. • Disconnect the relay in question. • Key ON. • Measure the voltage on PWR wire at relay harness connector. • **Is the voltage greater than 10 volts?**	Yes No	▶ REPLACE the relay in question. ▶ SERVICE the PWR wire in question.

Pinpoint Test ROC4

SCG - Testing Notes and Schematic

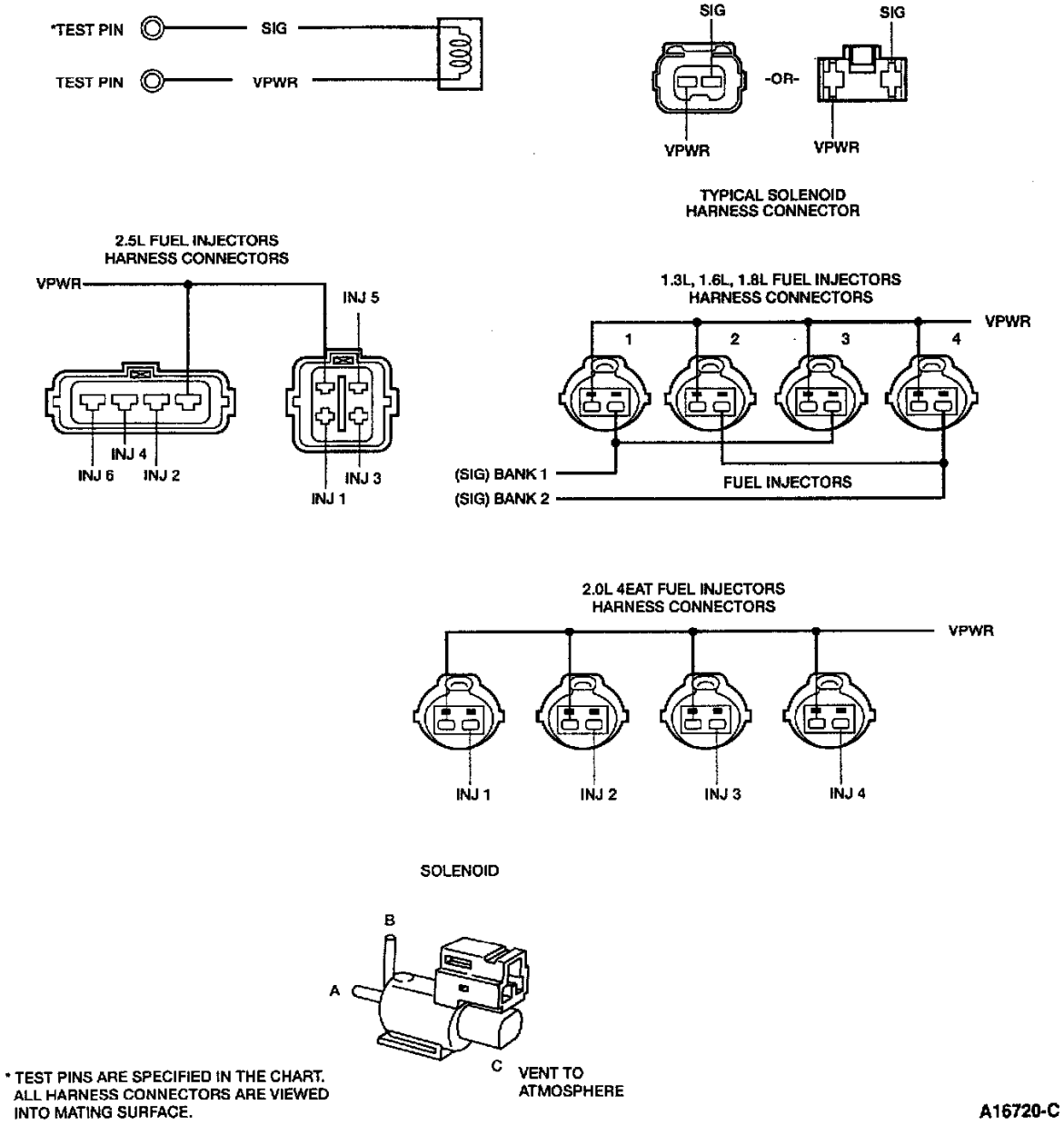

Pinpoint Test SCG Schematic

Enter this Pinpoint Test only when trouble code 25, 26,28, 29, 34, 41, or 46 is received in Quick Test steps 5 or 6, or when Quick Test step 11 directs you here.

This test is only intended to diagnose these circuits:

- **CANP (canister purge)**
- **EGRC (EGR control)**
- **EGRV (EGR vent)**
- **EVR (EGR vacuum regulator)**
- **FPRC (fuel pressure regulator control)**
- **HSIA (high speed inlet air control)**
- **IAC (idle air control)**
- **VRIS1 (variable resonance induction system solenoid #1)**

- **VRIS2 (variable resonance induction system solenoid #2)**

SOLENOID DATA SHEET

Solenoid	Activated by: (PCM ground solenoid under these conditions)	*Click Test Method
INJ (Fuel Injectors)	Cranking or running engine.	• Connect PCM. Key ON, crank engine. Listen to injector (clicking sound) with stethoscope.
CANP (Canister Purge)	Vehicle in gear, operating temperature above 60°C (140°F) during cruise and acceleration.	• Key ON, apply vacuum from intake manifold, vacuum should hold. • Ground Test Pin with jumper, vacuum should release.
EGRC (EGR Control)	Engine coolant temperature above 40°C (104°F). EGRC: normal driving (cruising)	• Key ON, apply vacuum from intake manifold. Vacuum should hold. • Ground Test Pin, vacuum should release.
EGRV (EGR Vent)	Engine coolant temperature above 40°C (104°F). EGRV: during idle, deceleration, or wide open throttle conditions	• Key ON, apply vacuum from EGR valve. Vacuum should not hold. • Ground Test Pin, vacuum should hold.
EVR (EGR Vacuum Regulator)	Engine coolant temperature below 70°C (158°F) or engine speed below 1500 rpm.	• Disconnect hoses at solenoid. Verify air flow between ports on the solenoid. Refer to diagram of ports shown in the electrical schematic. **Ports** **Air flow** A-B No A-C No B-C Yes • Key ON. Ground Test Pin. Verify air flow between ports on the solenoid. **Ports** **Air flow** A-B Yes A-C No B-C No
VRIS (Variable Resonance Induction System)	Engine at low speed, low vacuum condition.	• Disconnect hoses at solenoid. Verify air flow between ports on the solenoid. Refer to diagram of ports shown in the electrical schematic. **Ports** **Air flow** A-B No A-C No B-C Yes • Key ON. Ground Test Pin. Verify air flow between ports on the solenoid. **Ports** **Air flow** A-B Yes A-C No B-C No
FPRC (Fuel Pressure Regulator Control	Engine running, coolant temperature above 90°C (190°F) for 1.6L and 1.8L or 70°C (158°F) for 2.0L 4EAT and 2.5L, intake air temperature above 20°C (68°F), engine speed less than 1,500 rpm (for approx. 2 minutes after start).	• Key ON, apply vacuum to nipple from intake manifold. Vacuum should hold. • Ground Test Pin, vacuum should slowly release as ground is applied intermittently.

(Continued)

Pinpoint Test SCG Solenoid Data (Part 1)

SOLENOID DATA SHEET (Cont'd)

Solenoid	Activated by: (PCM ground solenoid under these conditions)	*Click Test Method
IAC (Idle Air Control)	Cranking and running engine.	• Disconnect the PCM. • Key ON. • Ground Test Pin intermittently. • Listen for IAC solenoid (clicking sound).
HSIA (High Speed Inlet Air Control)	Engine speed below 5000 rpm.	• Key ON, apply vacuum to nipple from reservoir. Vacuum should hold. • Ground Test Pin. Vacuum should release.

Pinpoint Test SCG Solenoid Data (Part 2)

CIRCUIT DATA SHEET

Engine	SIG	PCM Pin	BOB Pin	Wire Color	Diagnostic Trouble Code
1.3L	CANP	2X	31	R	26
	IAC	2W	41	R/BK	34
	BANK1	2U	58	GN/Y	—
	BANK2	2V	59	GN/BK	—
1.6L	CANP	2P	32	Y	26
	IAC	2Q	41	GN	34
	FPRC	2K	31	BR	25
	BANK1	3E	58	Y	—
	BANK2	3C	59	Y/BK	—
1.8L MTX	CANP	2X	31	W/BL	26
	IAC	2W	41	BL/O	34
	HSIA	2S	53	BK/R	41
	FPRC	2T	11	GN/O	25
	BANK1	2U	58	Y	—
	BANK2	2V	59	Y/BK	—
1.8L 4EAT	CANP	2O	31	W/BL	26
	IAC	3Q	21B	BL/O	34
	HSIA	3I	42	BK/R	41
	FPRC	3M	21A	GN/O	25
	BANK1	3U	58	Y	—
	BANK2	3V	59	Y/BK	—
2.0L 4EAT	FPRC	3M	53A	GN	25
	CANP	3N	31A	W/BK	26
	EVR	3K	33	W/BL	28
	INJ1	3W	58	Y/BK	NA
	INJ2	3X	59	Y/W	NA
	INJ3	3Y	12	Y/R	NA
	INJ4	3Z	13	Y/GN	NA
	IAC	3O	21B	LG/BK	34
	VPWR[1]	1B, 1U	37, 57	R/BK	NA
2.5L	FPRC	3M	21A	GN/BK	25
	CANP	2O	31	BL/BK	26
	EGRC	3P	52A	GN/W	28
	EGRV	3O	33A	W/BL	29
	INJ1	3U	58	R/LG	NA
	INJ2	3V	59	BL/W	NA
	INJ3	3W	12	BR	NA
	INJ4	3X	13	R/Y	NA
	INJ5	3Y	14	W	NA
	INJ6	3Z	15	W/BK	NA
	IAC	3Q	21B	LG/BK	34
	VRIS1	3I	42	W/GN	41
	VRIS2	3J	35	BL/R	46
	VPWR[1]	1B	37, 57	R/BK	NA

Pinpoint Test SCG Circuit Data

TEST STEP	RESULT ▶	ACTION TO TAKE
SCG1 CHECK SOLENOID FUNCTION		
• Key OFF. • Install breakout box (leave PCM disconnected). • Check for proper function of solenoid in question as described in the Data Sheet "Click Test Method" column. • **Does the solenoid in question function properly?**	Yes ▶	Solenoids OK. If directed here by Quick Test Step QT5 or QT6, REPLACE the PCM. If directed here by Quick Test Step QT11, RETURN to Diagnostic Routines.
	No ▶	GO to SCG2.

Pinpoint Test SCG1

SCG2 CHECK POWER TO SOLENOID		
• Key OFF. • Disconnect the connector of the solenoid in question. • Key ON. • Measure the voltage on the VPWR wire at the solenoid harness connector. • **Is the voltage approximately battery voltage?**	Yes ▶	GO to SCG3.
	No ▶	GO to EEC Pinpoint Test VPWR. If VPWR is OK, SERVICE the VPWR wire to solenoid.

Pinpoint Test SCG2

SCG3	CHECK SOLENOID WIRE TO PCM FOR OPEN		
	• Key OFF. • Install breakout box (leave PCM disconnected). • Disconnect the connector of the solenoid in question. • Measure the resistance between the solenoid Test Pin and the terminal at the solenoid harness connector. • **Is the resistance less than 5 ohms?**	Yes ▶ No ▶	GO to SCG4. SERVICE the solenoid wire to PCM for opens.

Pinpoint Test SCG3

SCG4	CHECK SOLENOID WIRE TO PCM FOR SHORT		
	• Key OFF. • Install breakout box (leave PCM disconnected). • Disconnect the connector of the solenoid in question. • Measure the resistance between the solenoid Test Pin and ground. • **Is the resistance greater than 10,000 ohms?**	Yes ▶ No ▶	REPLACE the solenoid. SERVICE the solenoid wire to PCM for shorts.

Pinpoint Test SCG4

SML - Testing Notes and Schematic

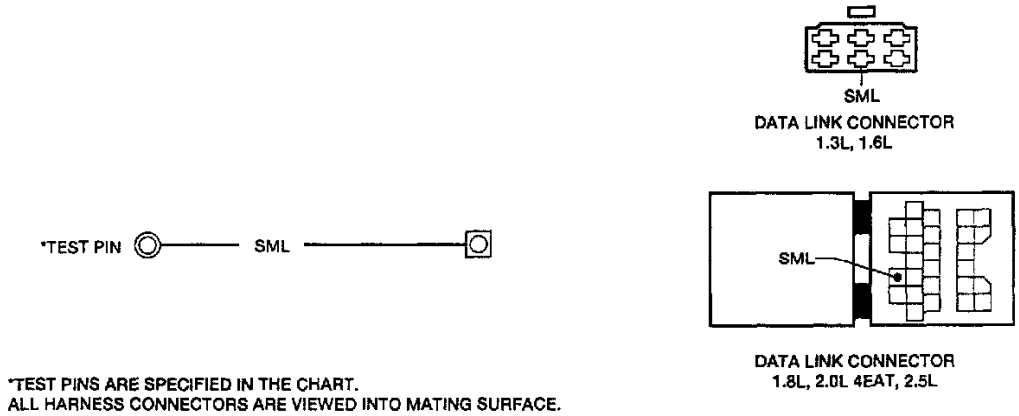

Pinpoint Test SML Schematic

Enter this Pinpoint Test only when directed here by Quick Test step 8.

This test is only intended to diagnose the SML circuit.

CIRCUIT DATA SHEET

Engine	Circuit	PCM Pin	BOB Pin	Wire Color
1.3L	SML	1D	38	BL/GN
1.6L	SML	1D	38	BK/BL
1.8L	SML	1D	38	W/Y
2.0L 4EAT	SML	1C	38	W/R
2.5L	SML	1D	38	W/R

Pinpoint Test SML Circuit Data

TEST STEP	RESULT ▶	ACTION TO TAKE
SML1 CHECK SML WIRE FOR OPEN • Key OFF. • Install breakout box (leave PCM disconnected). • Measure the resistance between Test Pin SML and data link connector SML terminal. • **Is the resistance less than 5 ohms?**	Yes ▶ No ▶	GO to SML2. SERVICE the data link connector SML wire to PCM for opens.

Pinpoint Test SML1

SML2 CHECK SML WIRE FOR SHORT • Key OFF. • Install breakout box (leave PCM disconnected). • Measure the resistance between Test Pin SML and ground. • **Is the resistance greater than 10,000 ohms?**	Yes ▶ No ▶	REPLACE the PCM. SERVICE the PCM SML wire to data link connector for shorts.

Pinpoint Test SML2

STG - Testing Notes and Schematics

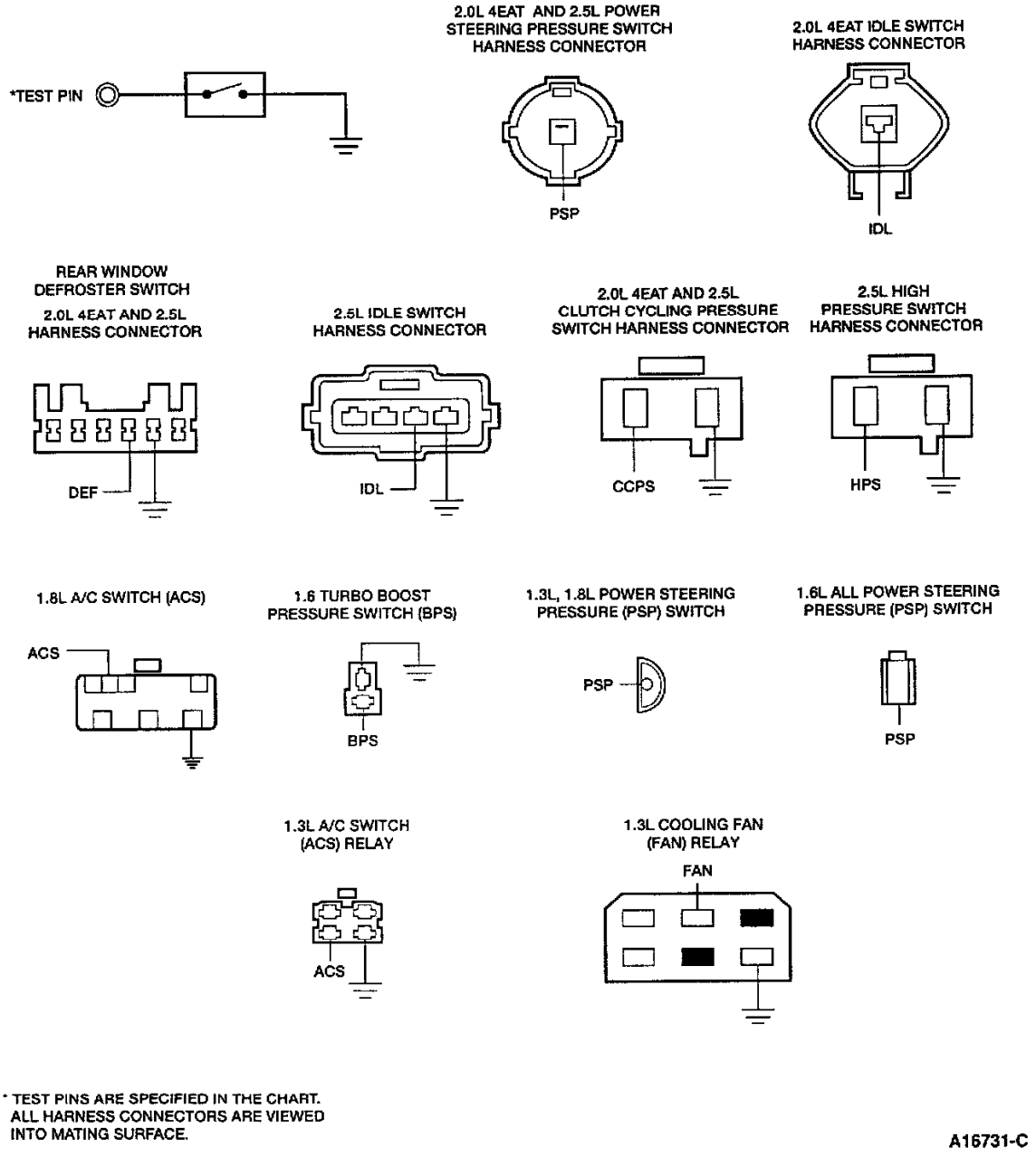

Pinpoint Test STG Schematic (Part 1)

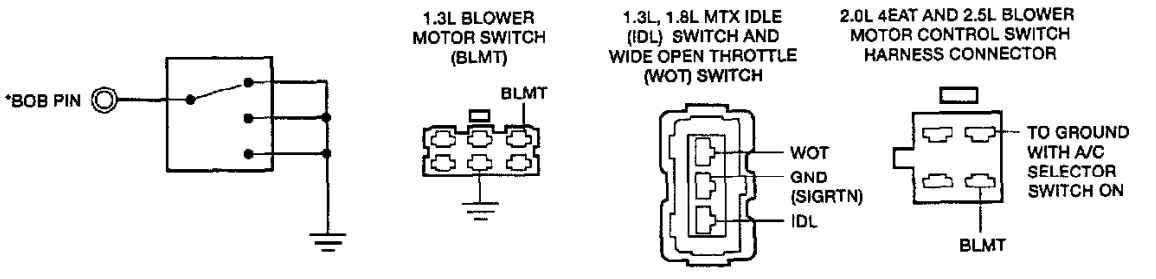

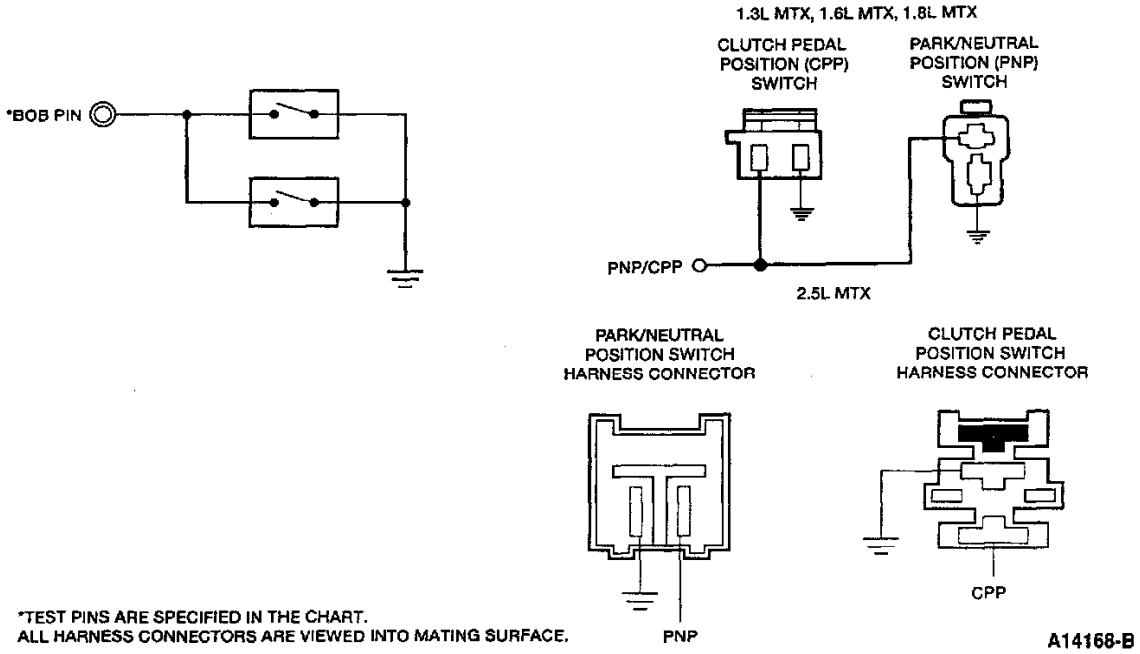

Pinpoint Test STG Schematic (Part 2)

Enter this Pinpoint Test only when directed here by Quick Test steps 9 or 11, or by a test procedure.

This test is only intended to diagnose the following:

- **ACS (A/C on-off switch)**
- **BPS (boost pressure switch)**
- **BLMT (blower motor control switch)**
- **CCPS (clutch cycling pressure switch)**
- **CPP (clutch pedal position switch)**
- **FAN (cooling fan switch)**
- **HPS (high pressure switch)**
- **PNP (park/neutral position switch)**
- **PSP (power steering pressure switch)**
- **DEF (rear window defroster switch)**
- **WOT (wide open throttle switch)**

CIRCUIT DATA SHEET

Switch	Abbrev.	Engine	PCM Pin	BOB Pin	Wire Color	Switch Exercise	Switch To
Power Steering Pressure	PSP	1.3L 1.6L 1.8L MTX 1.8L 4EAT 2.0L 4EAT 2.5L	1P 1K 1P 1N 1N 1N	19 19 19 24 10 24	PK GN/R BL/Y BL/Y BR/Y BL/Y	Close switch - turn steering wheel sharply with engine running	Ground
Clutch Cycling Pressure	CCPS	2.0L 4EAT 2.5L	1R 1O	41 41	PK/BK PK/BK	Close switch - A/C selected, A/C pressure within limits	Ground
High Pressure	HPS	2.5L	2H	9	PK/Y	Close switch - A/C pressure exceeds limits	Ground
Blower Motor Control	BLMT	1.3L 1.8L MTX 1.8L 4EAT 2.0L 4EAT 2.5L	1S 1S 1P 1P 1P	23 23 22 22 22	BL/R O/BL O/BL O/BK O/BK	Close switch - blower on 2nd, 3rd or 4th position (1.3L, 1.8L) or 3rd or HI position (2.0L 4EAT, 2.5L) and mode selector switch on	Ground
Park/Neutral Position, Clutch Pedal Position	PNP/CPP	1.3L MTX 1.6L MTX 1.8L MTX 2.5L MTX	1V 1G 1V 1R	43 8 43 30	BL/W R/BL BR/Y LG/BK	Close CPP switch - depress clutch. Close PNP switch - Trans. in neutral	Ground (either switch closed)
Rear Defroster	DEF	2.0L 4EAT 2.5L	1O 1J	34 34	P P	Close switch - button depressed	Battery voltage with Key ON, switch open. Approx. 1.0 volt with switch closed.
Idle	IDL	1.3L 1.6L 1.8L MTX 1.8L 4EAT 2.0L 4EAT 2.5L	1N 1E 1N 1T 1T 1T	18 28 18 18 18 18	Y/BK GN/O R/W R/W BR BR	Open switch - depress accelerator pedal	SIGRTN Ground SIGRTN SIGRTN Ground Ground
A/C On-Off	ACS	1.3L 1.8L MTX 1.8L 4EAT	1Q 1Q 1O	10 10 41	GN GN/BK GN/BK	Close switch - A/C button pushed (blower on)	Ground
Boost Pressure Switch	BPS	1.6L Turbo	2L	12	LG/BK	Open - Boost pressure under 72 kPa (10 psi) Close - Boost pressure above 72-80 kPa (10-12 psi)	Ground

(Continued)

Pinpoint Test STG Circuit Data (Part 1)

CIRCUIT DATA SHEET (Cont'd)

Switch	Abbrev.	Engine	PCM Pin	BOB Pin	Wire Color	Switch Exercise	Switch To
Wide-Open Throttle	WOT	1.3L 1.8L MTX	2L 2L	27 27	Y LG/W	Close switch - open throttle	Ground SIGRTN
Cooling Fan	FAN	1.3L	1R	22	Y/R	Close switch - by grounding coolant temperature switch	Ground

Pinpoint Test STG Circuit Data (Part 2)

TEST STEP	RESULT ▶	ACTION TO TAKE
STG1 CHECK SWITCH SIGNAL TO PCM		
• Key OFF. • Install breakout box (connect PCM). • Measure the voltage between the Test Pin of the switch in question and ground. NOTE: For 2.5L idle switch, the switch is adjustable. If there is 12 volts with switch closed, adjust idle switch position. • Exercise switch as indicated in "Switch Exercise" column of Data Sheet. NOTE: For high pressure switch voltage should always read approximately 5 volts. • **Are the voltages OK?**	Yes ▶ No ▶	Switch OK. RETURN to Diagnostic Routines GO to STG2.

Switch	Voltage
Open	greater than 10 volts
Closed	less than 1 volt

Pinpoint Test STG1

STG2 CHECK SWITCH WIRE TO PCM FOR OPEN		
• Key OFF. • Install breakout box (leave PCM disconnected). • Disconnect the connector of the switch in question. • Measure the resistance between the switch Test Pin and the terminal at the switch harness connector. • **Is the resistance less than 5 ohms?**	Yes ▶ No ▶	GO to STG3. SERVICE the wire in question for opens.

Pinpoint Test STG2

STG3 CHECK SWITCH WIRE TO PCM FOR SHORT		
• Key OFF. • Install breakout box (leave PCM disconnected). • Disconnect the connector of the switch in question. • Measure the resistance between the switch Test Pin and ground. • **Is the resistance less than 5 ohms?**	Yes ▶ No (PSP and IDL) ▶ No (All others) ▶	SERVICE wire in question for shorts. REPLACE the switch in question. GO to STG4.

Pinpoint Test STG3

TEST STEP	RESULT ▶	ACTION TO TAKE
STG4 CHECK GROUND AT SWITCH		
• Key OFF. • Disconnect the connector of the switch in question. • Measure the resistance between the ground terminal on the harness connector of the switch in question and ground. • **Is the resistance less than 5 ohms?**	Yes ▶ No ▶	REPLACE the switch in question. SERVICE the wire in question for open(s).

Pinpoint Test STG4

STI - Testing Notes and Schematic

Pinpoint Test Schematic

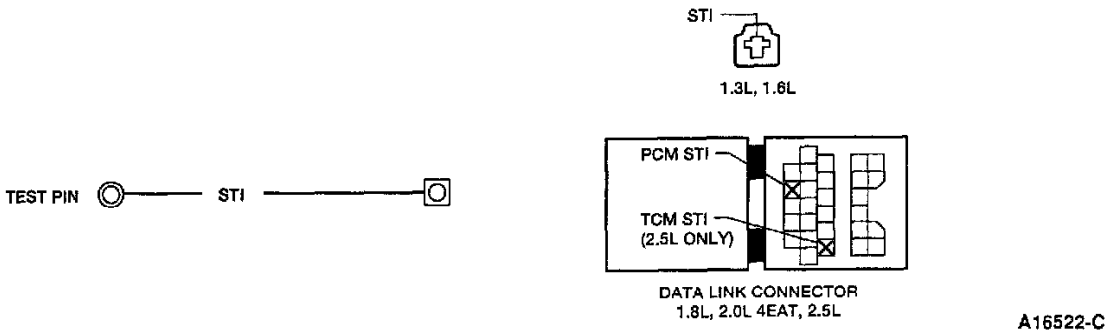

Data Sheet

CIRCUIT DATA SHEET

Engine	Circuit	PCM Pin	BOB Pin	Wire Color
1.3L	STI	1K	48	Y/GN
1.6L	STI	1W	48	Y
1.8L MTX	STI	1K	48	LG/Y
1.8L 4EAT	STI	1I	48	LG/Y
2.0L 4EAT	STI	1L	48	R/W
2.5L	STI	1I	48	R/W

Pinpoint Test STI Schematic & Circuit Data

Enter this Pinpoint Test only when directed here by Quick Test step 4.

This test is only intended to diagnose the STI circuit.

TEST STEP	RESULT ▶	ACTION TO TAKE
STI1 CHECK STI WIRE TO PCM FOR OPEN • Key OFF. • Install breakout box (leave PCM disconnected). • Measure the resistance between Test Pin STI and STI connector (1.3L 1.6L) or data link connector PCM STI (TEN) (1.8L, 2.0L 4EAT, 2.5L) wire. • **Is the resistance less than 5 ohms?**	Yes ▶ No ▶	GO to STI2. SERVICE the PCM STI wire for opens.

Pinpoint Test STI1

STI2 CHECK STI WIRE TO PCM FOR SHORT • Key OFF. • Install breakout box (leave PCM disconnected). • Measure the resistance between Test Pin STI and ground. • **Is the resistance greater than 10,000 ohms?**	Yes ▶ No ▶	GO to EEC Pinpoint Test STO. SERVICE the PCM STI wire for short.

Pinpoint Test STI2

STO - Testing Notes and Schematic

Pinpoint Test Schematic

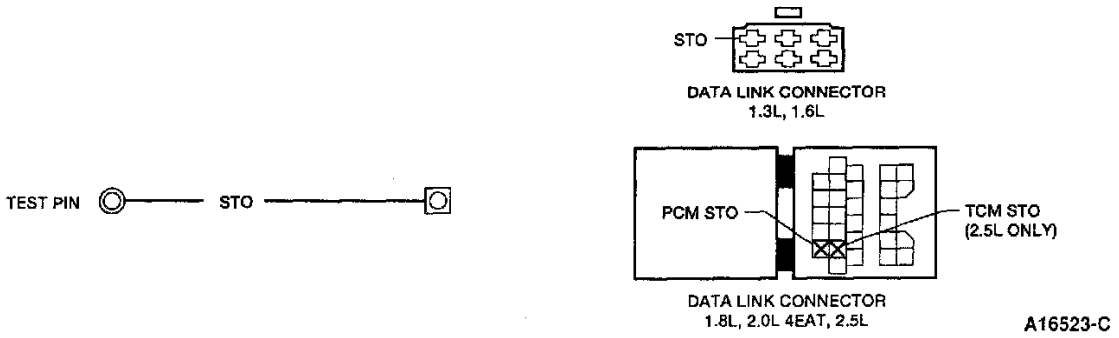

Data Sheet

CIRCUIT DATA SHEET

Engine	Circuit	PCM Pin	BOB Pin	Wire Color
1.3L	STO	1F	17	Y/W
1.6L	STO	1B	17	GN/BK
1.8L	STO	1F	17	W/BK
2.0L 4EAT	STO	1G	17	LG/R
2.5L	STO	1F	17	LG/R

Pinpoint Test STO Schematic & Circuit Data

Enter this Pinpoint Test only when directed here by Pinpoint Test STI.

This test is only intended to diagnose the STO circuit.

TEST STEP		RESULT ▶	ACTION TO TAKE
STO1	CHECK STO WIRE TO PCM FOR OPEN		
	• Key OFF. • Install breakout box (leave PCM disconnected). • Measure the resistance between Test Pin STO and data link connector PCM STO wire. • **Is the resistance less than 5 ohms?**	Yes ▶ No ▶	GO to STO2. SERVICE the PCM STO wire to data link connector for opens.

Pinpoint Test STO1

STO2	CHECK STO WIRE TO PCM FOR SHORT		
	• Key OFF. • Install breakout box (leave PCM disconnected). • Measure the resistance between Test Pin STO and ground. • **Is the resistance greater than 10,000 ohms?**	Yes ▶ No ▶	GO to EEC Pinpoint Test PGC. SERVICE the PCM STO wire to data link connector for shorts.

Pinpoint Test STO2

STP - Testing Notes and Schematic

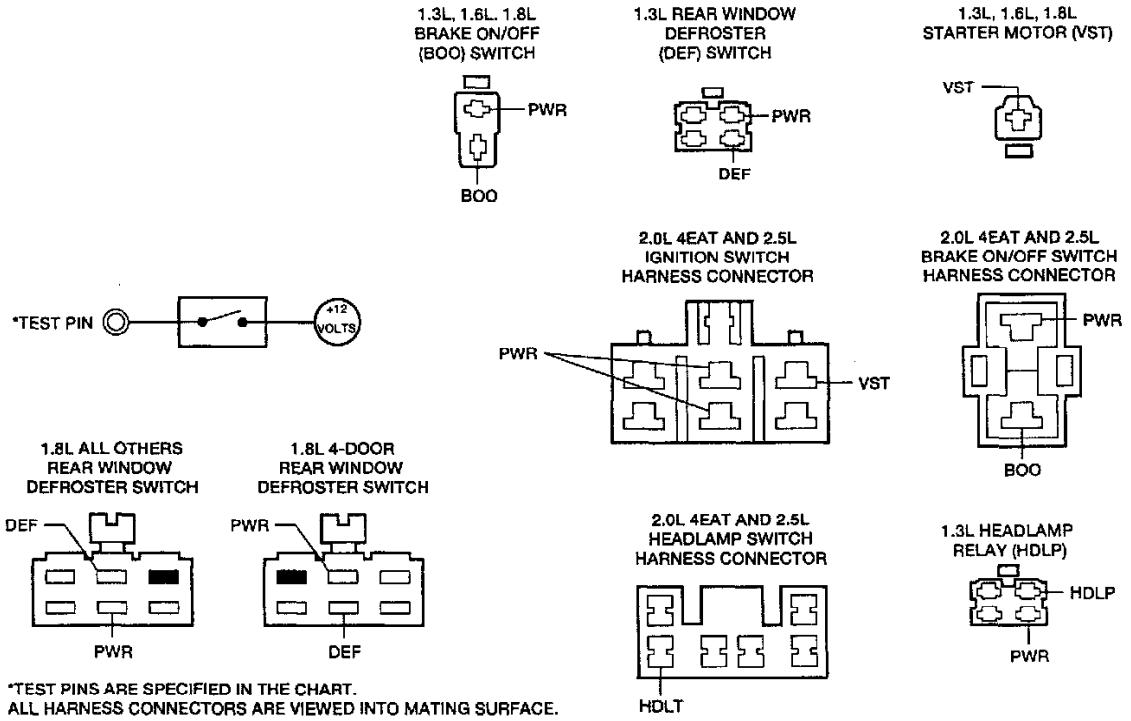

Pinpoint Test STP Schematic

Enter this Pinpoint Test only when directed here by Quick Test step 9 or 11.

This test is only intended to diagnose the following:

- **BOO (brake on/off switch)**
- **DEF (rear window defroster switch)**
- **HDLP (head lamp switch)**
- **VST (vehicle start (ignition) switch)**

CIRCUIT DATA SHEET

Switch	Abbrev.	Engine	PCM Pin	BOB Pin	Wire Color	Switch Exercise	Switch To
Brake ON/OFF Switch	BOO	1.3L 1.6L 1.8L MTX 1.8L 4EAT 2.0L 4EAT 2.5L	1O 1J 1O 1Q 1F 1Q	2 3 2 2 2 2	GN/R W/GN GN GN W/GN W/GN	Close switch by depressing brake pedal	Battery voltage with switch closed
Headlamp Switch	HDLP	1.3L 1.8L MTX 1.8L 4EAT 2.0L 4EAT 2.5L	1U 1U 1H 1J 1H	28 28 32 32 32	W R/BK R/BK W W	Close switch by turning on headlamps	Battery voltage with switch closed
Ignition Switch	VST	1.3L 1.6L 1.8L 2.0L 4EAT 2.5L	1C 3B 1C 1D 1C	5 5 5 5 5	BK/R BK/R P BK/R BK/R	Close switch by turning ignition switch to start (crank engine)	Approximately 9 volts with switch closed (cranking engine)
Rear Window Defroster Switch	DEF	1.3L 1.8L MTX 1.8L 4EAT	1T 1T 1J	30 30 34	BK/BL BK/BL BK/BL	Close switch by turning rear defroster switch on	Battery voltage with switch closed

Pinpoint Test STP Circuit Data

TEST STEP	RESULT ▶	ACTION TO TAKE
STP1 CHECK SWITCH SIGNAL TO PCM		
• Key OFF. • Install breakout box (leave PCM disconnected). • Key ON. • Measure the voltage at the Test Pin of the switch in question. • Exercise the switch as indicated in the Data Sheet. • **Are the voltages as indicated in the Data Sheet?**	Yes ▶	If directed here by Quick Test Step QT11, then RETURN to Diagnostic Routines. Otherwise, REPLACE the PCM. (Confirm SML circuit is OK before replacing PCM.)
	No (Headlamp Switch) ▶	If headlamps work, SERVICE wire for open(s). If headlamps do not work, GO to Service Manual Section 17-01.
	No (All others) ▶	GO to STP2.

Pinpoint Test STP1

STP2 CHECK POWER TO SWITCH		
• Key OFF. • Disconnect the connector of the switch in question. • Key ON. • Measure the voltage at the PWR terminal on the harness connector of the switch in question. • **Is the voltage approximately battery voltage?**	Yes ▶	GO to STP3.
	No ▶	SERVICE the PWR wire for open(s).

Pinpoint Test STP2

STP3 CHECK SWITCH CONTINUITY		
• Key OFF. • Disconnect the connector of the switch in question. • Measure the resistance between the terminals of the switch. • Exercise the switch in question.	Yes ▶	SERVICE the switch wire to PCM.
	No ▶	REPLACE the switch in question.

Switch	Resistance (ohms)
Open	greater than 10,000
Closed	less than 5

• **Is the resistance OK?**

Pinpoint Test STP3

TP - Test Notes and Schematic

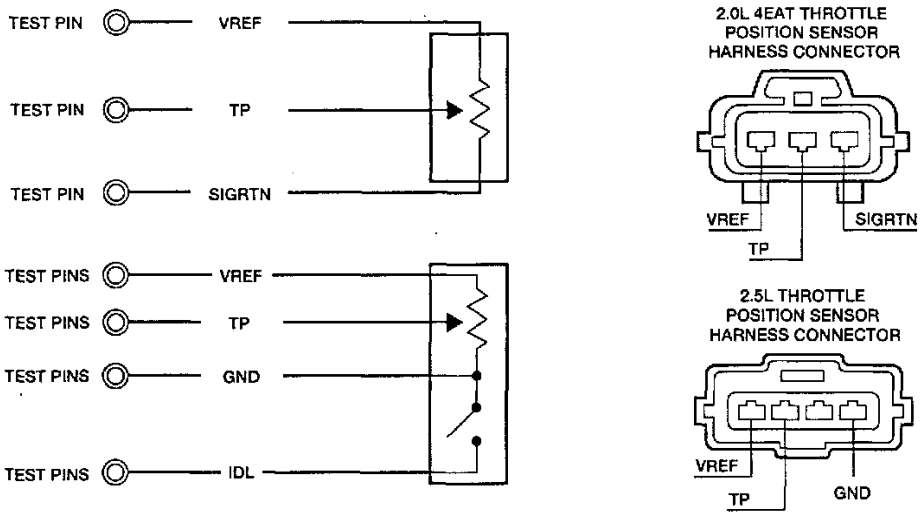

Pinpoint Test TP Schematic

Enter this Pinpoint Test only when trouble code 12 is received in Quick Test steps 5 or 6, or when Quick Test step 11 directs you here.

This test is only intended to diagnose the TP circuit.

CIRCUIT DATA SHEET

Engine	Circuit	PCM Pin	BOB Pin	Wire Color
1.6L	TP	2G	47	O
	VREF	2A	26	W/BK
	SIGRTN	2C	46, 49	BL/Y
	IDL	1E	28	GN/O
1.8L 4EAT	TP	2F	47	LG/W
	VREF	2I	26	LG/R
	SIGRTN	3D	46	BK/W
	IDL	1T	18	R/W
2.0L 4EAT	TP	2D	47	Y
	VREF	2I	26	P
	SIGRTN	3D	46	BK/BL
2.5L	TP	2F	47	Y
	VREF	2I	26	P
	GND	3D	46	BK/BL

Pinpoint Test TP Circuit Data

GRAPH

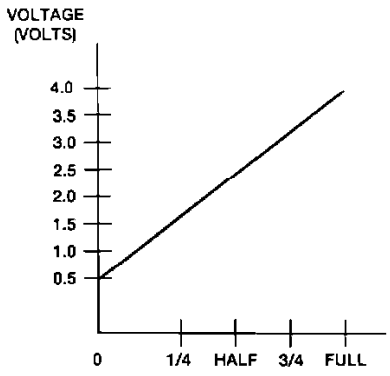

Throttle Position

Throttle Position

Throttle Position	Voltage (Volts)
0	0.5
1/4	1.3
Half	2.2
3/4	2.9
Full	3.7

Throttle Position	Resistance (kohms)
0	0.4
1/4	0.6
Half	1.6
3/4	2.2
Full	3.0

NOTE: Voltage and Resistance Values May Vary ± 15%.

Pinpoint Test TP Voltage And Resistance Data

TEST STEP	RESULT ▶	ACTION TO TAKE
TP1 CHECK TP INPUT VOLTAGE TO PCM		
• Key OFF. • Install breakout box (connect PCM). • Key ON. • Measure the voltage at Test Pin TP. • Compare the voltage readings to the graph and chart as the accelerator pedal is depressed. • **Are the voltages OK?**	Yes ▶ No ▶	TP circuit OK. If directed here from Quick Test Step QT11, RETURN to Diagnostic Routines. Otherwise, REPLACE the PCM. GO to TP2.

Pinpoint Test TP1

TP2 CHECK VREF		
• Key OFF. • Disconnect the throttle position sensor connector. • Key ON. • Measure the voltage on the VREF wire at the throttle position sensor harness connector. • **Is the voltage between 4.5 and 5.5 volts?**	Yes (1.6L, 1.8L 4EAT, 2.0L 4EAT) ▶ Yes (2.5L) ▶ No ▶	GO to TP3. GO to TP4. GO to EEC Pinpoint Test VREF.

Pinpoint Test TP2

TP3	CHECK WIRES TO PCM (1.6L, 1.8L 4EAT, 2.0L 4EAT)		
	• Key OFF. • Install breakout box (leave PCM disconnected). • Disconnect the throttle position sensor connector. • Measure the resistances of the TP wire and SIGRTN wire between Test Pins and the throttle position sensor harness connector. • Measure the resistance of the TP wire between Test Pin TP and ground. • **Are the resistances less than 5 ohms between Test Pins and the throttle position sensor harness connector, and greater than 10,000 ohms between Test Pin TP and ground?**	Yes No	▶ REPLACE the throttle position sensor. ▶ SERVICE the TP wire.

Pinpoint Test TP3

VPWR - Testing Notes and Schematic

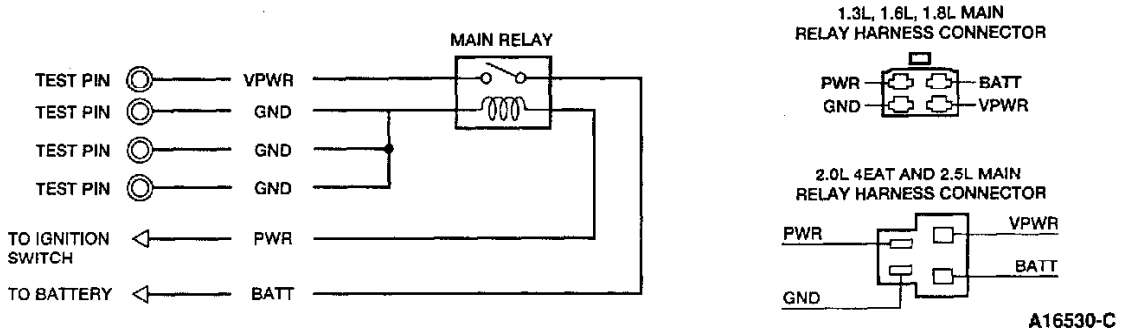

Pinpoint Test VPWR Schematic

Enter this Pinpoint Test only when directed here by other Pinpoint Tests.

This test is only intended to diagnose the VPWR and GND circuits.

CIRCUIT DATA SHEET

Engine	Circuit	PCM Pin	BOB Pin	Wire Color
1.3L	VPWR	1B	37, 57	Y/BK
	GND	2A	39, 40, 44, 60	BK
	GND	2B	20	BK
	GND	2C	16	BK
1.6L	VPWR	3I	37	Y/GN
	GND	2R	49	BK
	GND	3A	20	BK
	GND	3G	40	BK
1.8L MTX	VPWR	1B	37, 57	W/R
	GND	2A	39, 40, 44, 60	BK/O
	GND	2B	20	BK/O
	GND	2C	16	BK/LG
1.8L 4EAT	VPWR	1B	37, 57	W/R
	GND	3A	40, 60	BK/O
	GND	3B	20	BK/O
	GND	3C	49	BK/LG
2.0L 4EAT	VPWR	1B, 1U	37, 57	R/BK
	GND	3A	40, 60	BK
	GND	3B	20	BK
	GND	3C	16	BK/R
2.5L	VPWR	1B	37, 57	R/BK
	GND	3A	40, 60	BK
	GND	3B	20	BK
	GND	3C	49	BK/R
	GND	3D	46	BK/BL

Pinpoint Test VPWR Circuit Data

TEST STEP		RESULT ▶	ACTION TO TAKE
VPWR1	CHECK VPWR TO PCM • Key OFF. • Install breakout box (leave PCM disconnected). • Key ON. • Measure the voltage at Test Pin VPWR. • **Is the voltage greater than 10 volts?**	Yes ▶ No ▶	GO to VPWR2. GO to VPWR3.

Pinpoint Test VPWR1

VPWR2	CHECK GROUNDS AT PCM • Key OFF. • Install breakout box (leave PCM disconnected). • Measure the resistance between Test Pins GND and ground. • **Are the resistances less than 5 ohms?**	Yes ▶ No ▶	VPWR circuit OK. RETURN to the Pinpoint Test that sent you here. SERVICE the GND wire(s).

Pinpoint Test VPWR2

TEST STEP		RESULT ▶	ACTION TO TAKE
VPWR3	CHECK VPWR WIRE FROM MAIN RELAY TO PCM • Key OFF. • Install breakout box (leave PCM disconnected). • Remove the main relay. • Measure the resistance of the VPWR wire between Test Pin VPWR and the VPWR terminal on the main relay harness connector in the main fuse panel. • **Is the resistance less than 5 ohms?**	Yes ▶ No ▶	GO to VPWR4. SERVICE the VPWR wire.

Pinpoint Test VPWR3

VPWR4	CHECK GROUND AT MAIN RELAY • Key OFF. • Remove the main relay. • Measure the resistance of the GND wire between the GND terminal at the main relay harness connector and ground. • **Is the resistance less than 5 ohms?**	Yes ▶ No ▶	GO to VPWR5. SERVICE the GND wire at the main relay.

Pinpoint Test VPWR4

VPWR5	CHECK BATTERY VOLTAGE AT MAIN RELAY • Key OFF. • Remove the main relay. • Measure the voltage at the BATT terminal at the main relay harness connector. • **Is the voltage greater than 10 volts?**	Yes ▶ No ▶	GO to VPWR6. CHECK the fuse. - 15A EGI (1.3L) - 30A EGI (1.6L) - 30A FUEL INJECTOR (1.8L) - 30A F/P INJ (2.0L 4EAT) - 30A F/P INJ (2.5L) REPLACE if blown. If OK, SERVICE BATT wire.

Pinpoint Test VPWR5

VPWR6	CHECK PWR TO MAIN RELAY		
	• Key OFF. • Remove the main relay. • Key ON. • Measure the voltage at the PWR terminal at the main relay harness connector. • **Is the voltage greater than 10 volts?**	Yes ▶ No ▶	REPLACE the main relay. CHECK the fuse. - 10A ENGINE (1.3L) - 15A ENGINE (All others) REPLACE if blown. If OK, SERVICE PWR wire.

Pinpoint Test VPWR6

VREF - Testing Notes and Schematic

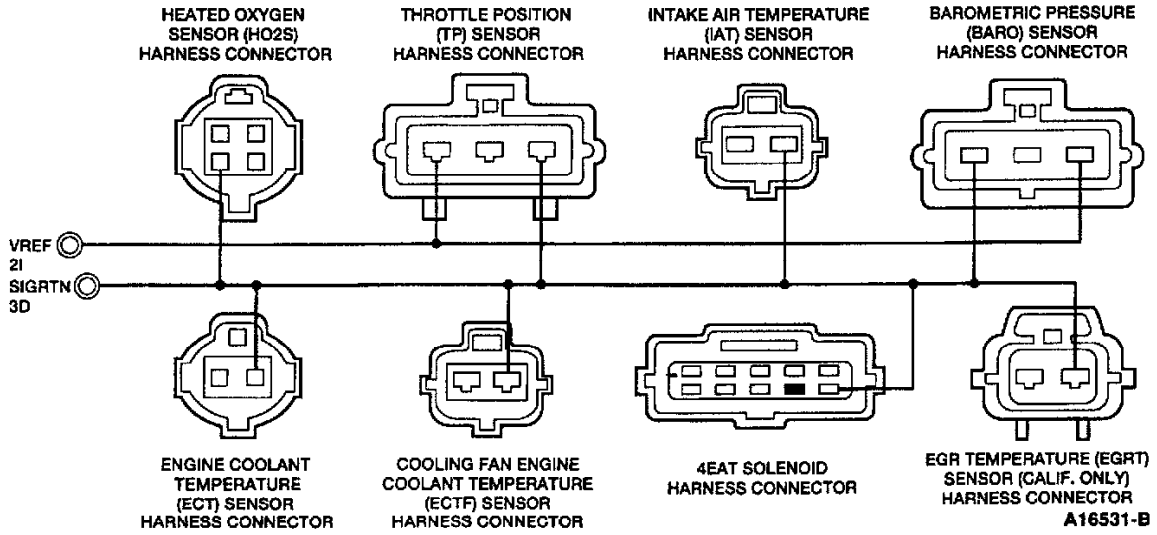

Pinpoint Test VREF Schematic

Enter this Pinpoint Test only when Quick Test step 11 or other Pinpoint Tests direct you here.

This test is only intended to diagnose the VREF and SIG RTN circuits.

CIRCUIT DATA SHEET

Engine	Circuit	PCM Pin	BOB Pin	Wire Color
1.3L	VREF GND	2K 2D	26 46, 49	BK/W BK
1.6L	VREF SIGRTN	2A 2C	26 46	W/BK BL/Y
1.8L MTX	VREF SIGRTN	2K 2D	26 46, 49	LG/R BK/W
1.8L 4EAT	VREF SIGRTN	2I 3D	26 46	LG/R BK/W
2.0L 4EAT	VREF SIGRTN	2I 3D	26 46	P BK/BL
2.5L	VREF GND	2I 3D	26 46	P BK/BL

Pinpoint Test VREF Circuit Data

TEST STEP		RESULT ▶	ACTION TO TAKE
VREF1	CHECK VREF AT PCM		
	• Key OFF. • Install breakout box (connect PCM). • Key ON. • Measure the voltage between Test Pins VREF and SIGRTN (GND on 1.3L, 2.5L). • **Is the voltage between 4.5 and 5.5 volts?**	Yes ▶ No ▶	GO to VREF2. GO to EEC Pinpoint Test VPWR. If VPWR is OK, then REPLACE the PCM.

Pinpoint Test VREF1

VREF2	CHECK FOR VREF AT SENSOR		
	• Key OFF. • Disconnect the BARO, EVP, VAF, MC-VAF, and TP sensor connectors as applicable to vehicle. Refer to Pinpoint Test Schematics. • Key ON. • Measure the voltage on the VREF wire at the sensor connectors as indicated in Pinpoint Test Schematics. • **Are the voltages between 4.5 and 5.5 volts?**	Yes No (0 volts) No (10-12 volts)	▶ VREF circuit OK. RETURN to Diagnostic Routines. ▶ GO to VREF3. ▶ SERVICE the wire in question for short to power.

Pinpoint Test VREF2

VREF3	CHECK VREF WIRE TO PCM FOR OPENS		
	• Key OFF. • Install breakout box (leave PCM disconnected). • Disconnect the BARO, EVP, VAF, MC-VAF, and TP sensor connectors as applicable to vehicle. Refer to Pinpoint Test Schematics. • Measure the resistance between Test Pin VREF and VREF wire at the BARO, EVP, VAF, MC-VAF and TP sensor harness connectors. • **Are all resistances less than 5 ohms?**	Yes No	▶ GO to VREF4. ▶ SERVICE the wire in question for opens.

Pinpoint Test VREF3

VREF4	CHECK VREF WIRE TO PCM FOR SHORTS		
	• Key OFF. • Install breakout box (leave PCM disconnected). • Disconnect the Transaxle Control Module (TCM) (1.6L 4EAT, 2.5L 4EAT). • Disconnect BARO, EVP, VAF, MC-VAF, and TP sensor connectors as applicable to vehicle. Refer to Pinpoint Test Schematics. • Measure the resistance between Test Pin VREF and ground. • **Is the resistance greater than 10,000 ohms?**	Yes (1.6L, 1.8L, 2.0L 4EAT) Yes (1.3L, 2.5L) No	▶ SERVICE the SIGRTN wire to PCM. ▶ SERVICE the GND wire at sensor. ▶ SERVICE the wire in question for shorts.

Pinpoint Test VREF4

VSS - Test Notes and Schematic

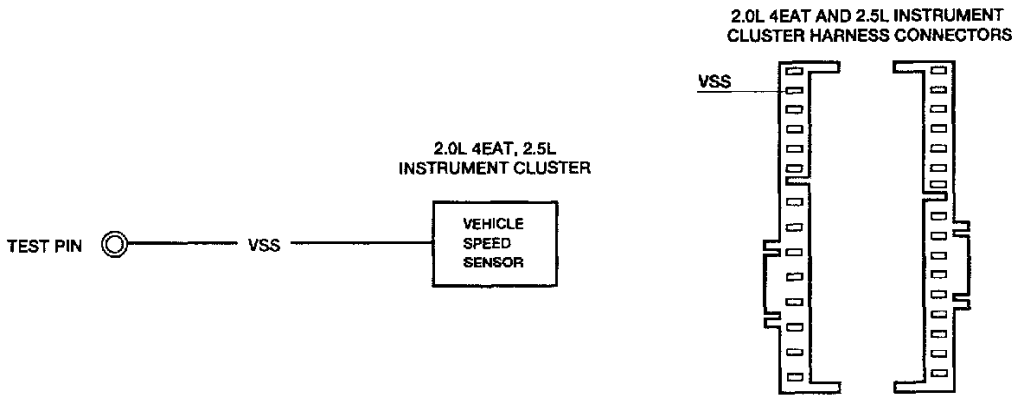

Pinpoint Test VSS Schematic

Enter this Pinpoint Test only when Quick Test step 11 directs you here.

This test is only intended to diagnose the VSS circuit.

CIRCUIT DATA SHEET

Engine	Circuit	PCM Pin	BOB Pin	Wire Color
1.8L 4EAT	VSS	1M	3	GN
2.0L 4EAT	VSS	1M	3	GN/R
2.5L	VSS	1M	3	GN/R

Pinpoint Test VSS Circuit Data

TEST STEP	RESULT ▶	ACTION TO TAKE
VSS1 CHECK VSS SIGNAL TO PCM		
• Key OFF. • Install breakout box (leave PCM disconnected). • Key ON. • Raise vehicle on hoist. • Measure the voltage at Test Pin VSS with a digital voltmeter while spinning front tire. • **Does the voltage alternate between 0 and 5 volts?**	Yes ▶ No ▶	VSS circuit OK. If sent to this test by Quick Test Step QT11, RETURN to Diagnostic Routines. GO to VSS2.

Pinpoint Test VSS1

VSS2 CHECK VSS WIRE TO PCM FOR OPEN		
• Key OFF. • Install breakout box (leave PCM disconnected). • Disconnect the 14-pin instrument cluster connector. • Measure the resistance of the VSS wire between Test Pin VSS and the VSS wire at the 14-pin instrument cluster harness connector. • **Is the resistance less than 5 ohms?**	Yes ▶ No ▶	GO to VSS3. SERVICE the VSS wire for open.

Pinpoint Test VSS2

VSS3 CHECK VSS WIRE TO PCM FOR SHORT		
• Key OFF. • Install breakout box (leave PCM disconnected). • Disconnect the 14-pin instrument cluster connector. • Measure the resistance of the VSS wire between Test Pin VSS and ground. • **Is the resistance greater than 10,000 ohms?**	Yes ▶ No ▶	Diagnose the Vehicle Speed Sensor. SERVICE the VSS wire for short.

Pinpoint Test VSS3

Component Tests and General Diagnostics

CAUTION: Use ONLY a high impedance Digital Volt Ohm Meter (DVOM) when testing components on computerized vehicles. Be sure the voltmeter is set to read VOLTS only (not ohms). Be sure external voltage is not applied to the sensor lead, as damage to the sensor may occur.

1. Make sure the vehicle is at normal operating temperature. Run the engine at 2500 RPM for 3 minutes with the transmission in "PARK" **(A/T)** or "NEUTRAL" **(M/T)**.
2. With the engine "OFF," connect the negative terminal of the voltmeter to engine ground. Set the meter to 2 volts DC. Disconnect the oxygen sensor lead. Connect the positive lead of the voltmeter to the oxygen sensor.
3. Create full lean condition for 10 seconds, voltage should decrease to 0.2 volts or less and remain there.
4. Create full rich condition for 10 seconds, voltage should increase to 0.8 volts or more and remain there.
5. If sensor voltage fails to vary according to the test steps above, the sensor is defective.
6. Reconnect oxygen sensor and clear codes.

Normal Scan Data Values (Includes PIDs)

1993 Ford Probe L4-121 2.0L DOHC VIN A MFI

*** UPDATED BY TSB #9324B15, DECEMBER, 1993

SENSORS/ INPUTS	Signal Pin #	KOEO	KOEO Units	HOT IDLE	30 MPH	55 MPH	KOER Units
DEF - red	15	VBAT	DCV	0 (2)	VBAT	VBAT	DCV
TP	47	.5	DCV	.5	.5-.7	.6-.9	DCV
MAF	50	0	DCV	.6-.7	1.3-1.6	1.7-2.4	DCV
ECT	7	.7	DCV	.6	.7	.7	DCV
IAT	25	2.3	DCV	2.4	2.8	3.0	DCV
HDL	45	0 (6)	DCV	VBAT (5) (6)	0 (6)	0 (6)	DCV
IDM	4	1-15	RPM	690-740	1570-1670	2280-2440	RPM
PIP	56	0-15	RPM	690-740	1570-1670	2280-2440	RPM
ACD	23	9.8	DCV	.7 (1)	11.1	11.1	DCV
HO2S	44	0	DCV	switching (7)	switching (7)	switching (7)	DCV
BLR - red	14	9.8-11.7	DCV	0 (4)	11.1	11.1	DCV
VSS+	3	1	MPH	1	30	55	MPH
CID	24	.5	DCV	.5	.5	.5	DCV
EGRT	43	2.9	DCV	2.9	1.8 - 3.5	.1	DCV
CPP	30	.1	DCV	.1	VBAT	VBAT	DCV
FPM - red	8	0 (6)	DCV	VBAT (6)	VBAT (6)	VBAT (6)	DCV
PSP	28	11.1	DCV	.1 (3)	12.6	12.6	DCV
STI	48	5.0	DCV	5.0	5.0	5.0	DCV
ACTUATORS/ OUTPUTS							
INJ 3	39	VBAT (6)	DCV	3.4-3.7	4.5-5.5	5.7-6.7	mS
INJ 4	35	VBAT (6)	DCV	3.4-3.7	4.5-5.5	5.7-6.7	mS
INJ 2	59	VBAT (6)	DCV	3.4-3.7	4.5-5.5	5.7-6.7	mS
INJ 1	58	VBAT (6)	DCV	3.4-3.7	4.5-5.5	5.7-6.7	mS
HFC	33	VBAT (6)	DCV	VBAT (6)	VBAT (6)	VBAT (6)	DCV
STO/MIL	17	.1	DCV	VBAT	VBAT	VBAT	DCV
EVR	31	VBAT (6)	DCV	VBAT (6)	.3 (6)	.3 (6)	DCV
ACON	54	VBAT	DCV	.2 (1)	VBAT	VBAT	DCV
IAC	21	VBAT	DCV	9.6.-9.7	6.4-9.1	5.5-6.2	DCV
FPRC	13	.2	DCV	VBAT	VBAT	VBAT	DCV
FP	22	VBAT	DCV	.1-.2	.1-.2	.1-.2	DCV
SPOUT	36	15	RPM	690-740	1570-1670	2280-2440	RPM
LFC	32	VBAT (6)	DCV	VBAT (6)	VBAT (6)	VBAT (6)	DCV
CANP	11	VBAT	DCV	VBAT	8.5-VBAT	.3-9.5	DCV
OTHER							
IGN TIMING	TIMING	N/A	DEG	10-22	26-30	28-32	DEG

Diagnostic Reference Values

NOTES

(1) - A/C ON.
(2) - Rear window defroster ON.
(3) - Steering wheel turned.
(4) - Blower on HIGH.
(5) - Headlights ON.
(6) - Monitor in DCV Manual Mode, Reference Pin to PWR GND (40/60).
(7) - HO2S should switch from rich (red LED) to lean (green LED), or lean to rich, at least once every 3 seconds. HO2S voltage should toggle above and below 0.450 DCV and should never be a negative value.

Reference values shown may vary ± 20% depending on operating conditions and other factors. RPM values are axle and tire dependent.

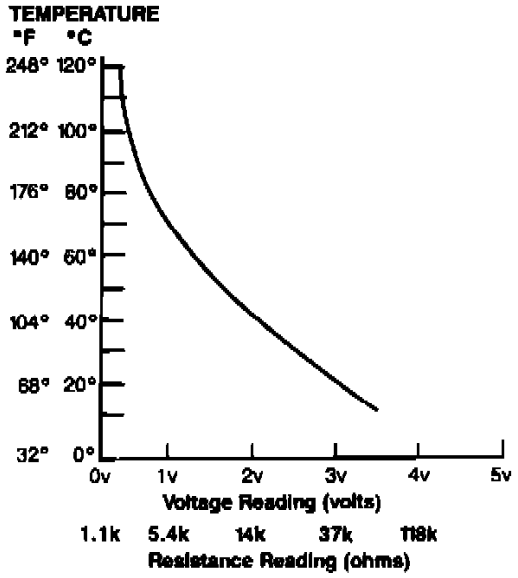

TEMPERATURE °F	°C	VOLTAGE* Volts	RESISTANCE K ohms
248	120	0.28	1.18
230	110	0.36	1.55
212	100	.47	2.07
194	90	.61	2.80
176	80	.80	3.84
158	70	1.04	5.37
140	60	1.35	7.60
122	50	1.72	10.97
104	40	2.16	16.15
86	30	2.62	24.27
68	20	3.06	37.30
50	10	3.52	58.75

Voltage values calculated for VREF=5.0v (These values may vary ± 15% due to sensor and VREF variations).

Air Charge Temperature Sensor Graph

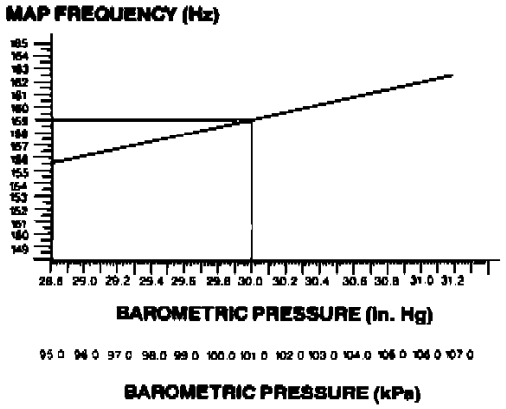

BAROMETRIC PRESSURE in. (Hg)	kPa	FREQUENCY Hz *
17.1	58	122.4
18.3	62	125.5
19.5	66	128.7
20.7	70	131.9
21.8	74	135.1
23.0	78	138.3
24.2	82	141.8
25.4	86	145.4
26.6	90	148.9
27.7	94	152.5
28.9	98	156.1
30.1	102	159.6
31.0	105	162.4

OUTPUT FREQUENCY AT KOEO

*Frequency may vary plus or minus 6 Hz of these values due to sensor variations.

Manifold Vaccum

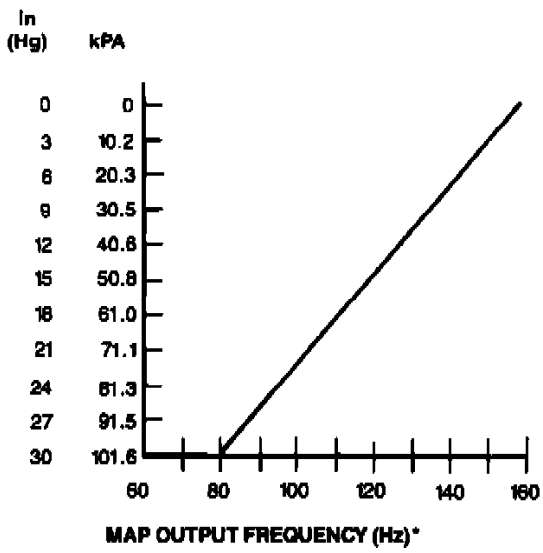

MANIFOLD VACUUM in. (Hg)	kPa	FREQUENCY Hz *
0	0	159
3	10.2	150
6	20.3	141
9	30.5	133
12	40.6	125
15	50.8	117
18	61.0	109
21	71.1	102
24	81.3	95
27	91.5	88
30	101.6	80

*MAP output frequency versus manifold vacuum data is based on 30.0 in. (Hg) Barometric Pressure.

Barometric Pressure Sensor Graph

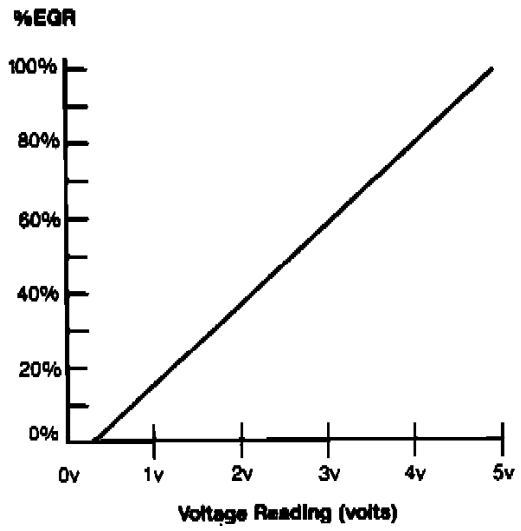

%EGR	VOLTAGE*
0	0.40
10	0.75
20	1.10
30	1.45
40	1.80
50	2.15
60	2.50
70	2.85
80	3.20
90	3.55
100	3.90

Voltage values calculated for VREF=5.0v (These values may vary ± 15% due to sensor and VREF variations).

EGR Valve Position (EVP) Sensor Graph

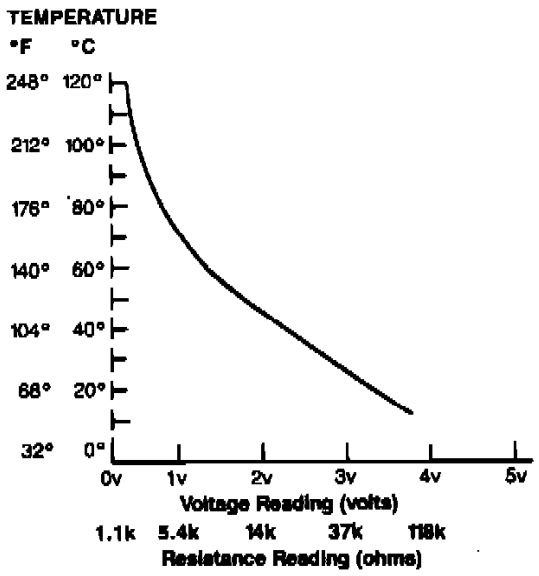

TEMPERATURE		VOLTAGE*	RESISTANCE
°F	°C	Volts	K ohms
248	120	0.28	1.18
230	110	0.36	1.55
212	100	.47	2.07
194	90	.61	2.80
176	80	.80	3.84
158	70	1.04	5.37
140	60	1.35	7.60
122	50	1.72	10.97
104	40	2.16	16.15
86	30	2.62	24.27
68	20	3.06	37.30
50	10	3.52	58.75

Voltage values calculated for VREF=5.0v (These values may vary ± 15% due to sensor and VREF variations).

Engine Coolant Temperature Sensor Graph

Fuel Pressure

Key On Engine OFF (KOEO) ..... 35-45 psi (240-310 kPa)

Engine Running (Idle Speed) ..... 30-45 psi (210-310 kPa)

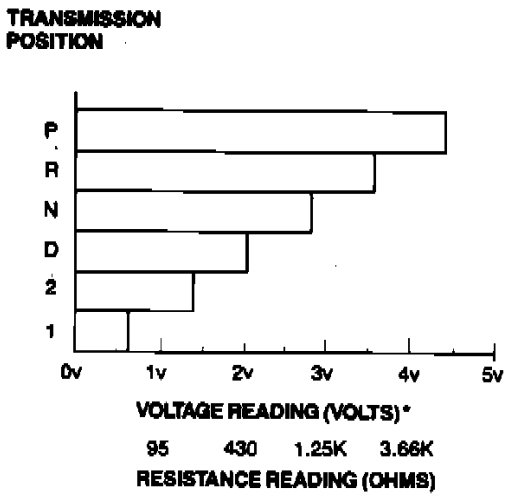

Transmission Shift Position	Voltage* Volts	Resistance Ohms
P	4.41	4.16K
R	3.60	1.44K
N	2.83	733
D	2.09	401
2	1.37	211
1	.68	81

Voltage values calculated for VREF=5.0v (These values may vary ± 15% due to sensor and VREF variations)

Manual Lever Position Sensor Graph

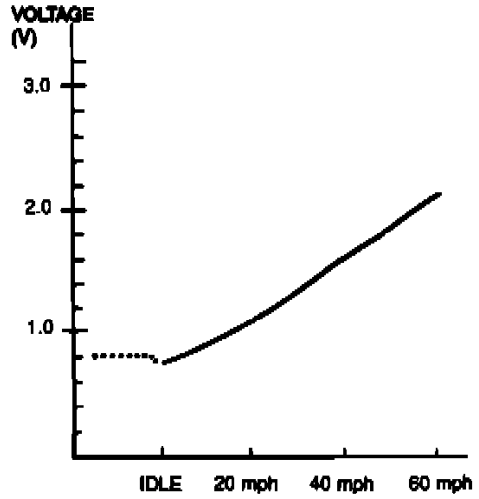

ENGINE CONDITION	VOLTAGE VOLTS*
IDLE	.8
20 MPH	1.0
40 MPH	1.7
60 MPH	2.1

*Engine at Normal Operating Temperature.

Mass Air Flow Sensor Graph

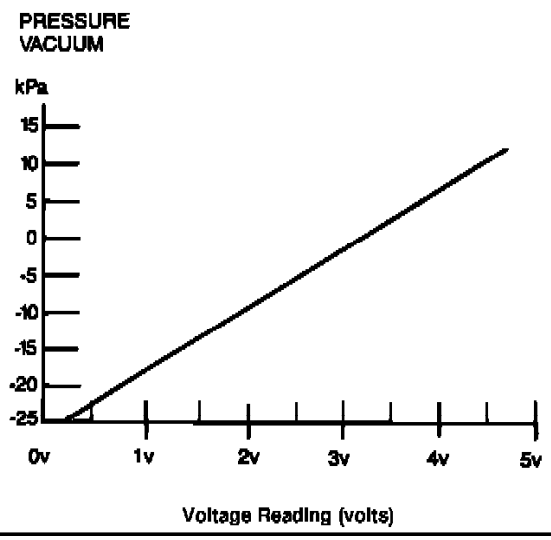

PRESSURE/VACUUM			
PSI	in. Hg	kPa	VOLTAGE*
1.82	-	12.5	4.75
1.36	-	9.42	4.38
0.91	-	6.25	4.0
0.46	-	3.17	3.63
0	0	0	3.25
-	5	-17	1.22
-	7.4	-25	0.25

CAUTION: To avoid possible sensor damage do not exceed pressure/vacuum range shown when testing.

Voltage values calculated for VREF=5.0v (These values may vary ± 15% due to sensor and VREF variations)

Pressure Feedback EGR (PFE) Sensor Graph

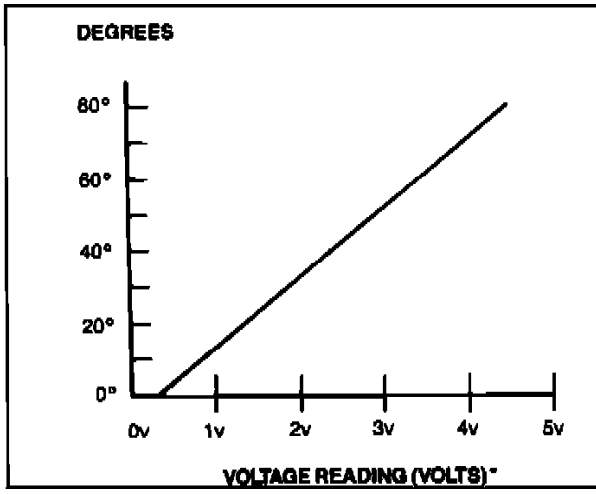

THROTTLE ANGLE DEGREES	VOLTAGE* VOLTS
0	0.50
10	0.97
20	1.44
30	1.90
40	2.37
50	2.84
60	3.31
70	3.78
80	4.24

*Voltage values calculated for VREF=5.0v (These values may vary ± 15% due to sensor and VREF variations)

Throttle Position Sensor Graph

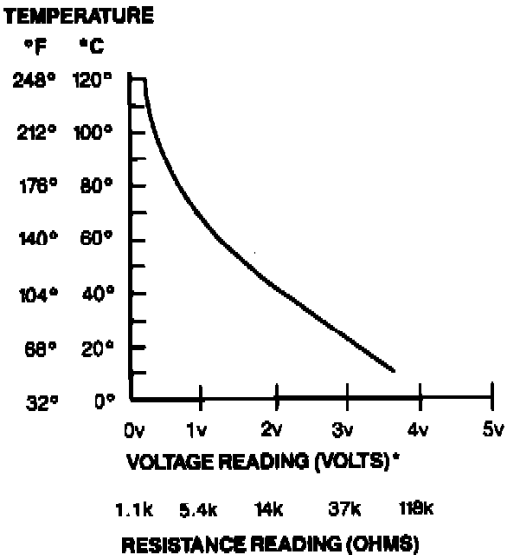

TEMPERATURE °F	°C	VOLTAGE* Volts	RESISTANCE K ohms
248	120	0.28	1.18
230	110	0.36	1.55
212	100	.47	2.07
194	90	.61	2.80
176	80	.80	3.84
158	70	1.04	5.37
140	60	1.35	7.60
122	50	1.72	10.97
104	40	2.16	16.15
86	30	2.62	24.27
68	20	3.06	37.30
50	10	3.52	58.75

*Voltage values calculated for VREF=5.0v (These values may vary ± 15% due to sensor and VREF variations)

Transmission Oil Temperature Sensor Graph

Introduction

The Electronic Engine Control **(EEC-IV)** Monitor and EEC-IV Recorder are useful tools for diagnosing intermittent driveability problems which are not repairable by the normal diagnostics in Pinpoint tests. Although this section provides diagnostic procedures and data to be used with the monitor and recorder in a symptom oriented manner, there are several graphs, charts, and tables located under **Diagnostic Reference Values** and **Graphs and Charts** that are useful without the monitor.

By definition, intermittent is a randomly occurring symptom that sets no hard codes. Often the Quick Test results in a pass, while the symptom remains. Before proceding with the procedures in this section, be sure that:

- Customary mechanical system tests and inspections reveal nothing. Remember that a mechanical problem can cause unpredictable results from a good EEC system.

- A Quick test and related Pinpoint tests have been successfully completed, but the problem still remains.

- A review of the Technical Service Bulletins **(TSB)** reveals no applicable article. (If applicable articles are found, perform the actions in the article prior to proceding with tests in this section).

The monitor and recorder function as a window into the EEC system. Through this window the operator is able to view the same sensor values and signals as the Powertrain Control Module **(PCM)**. The PCM uses these values to make decisions which increase performance and decrease emissions. The monitor can display these values during both key ON Engine OFF and Engine RUNNING conditions. The advantage of the recorder is the ability to take a "snapshot" of selected EEC signals that can be stored and retrieved later.

The diagnostic procedures used in this section is a symptom based approach for isolating the faulty system, circuit, or component. Often a mechanical fault will cause a good EEC system to react abnormally. In such cases, the use of a monitor will enhance the ability to eliminate possible EEC faults and also locate mechanical faults.

NOTE: It is important to perform **Quick Test** before proceeding. Diagnostic trouble codes must be recorded before disconnecting the PCM harness from the PCM to install the Monitor.

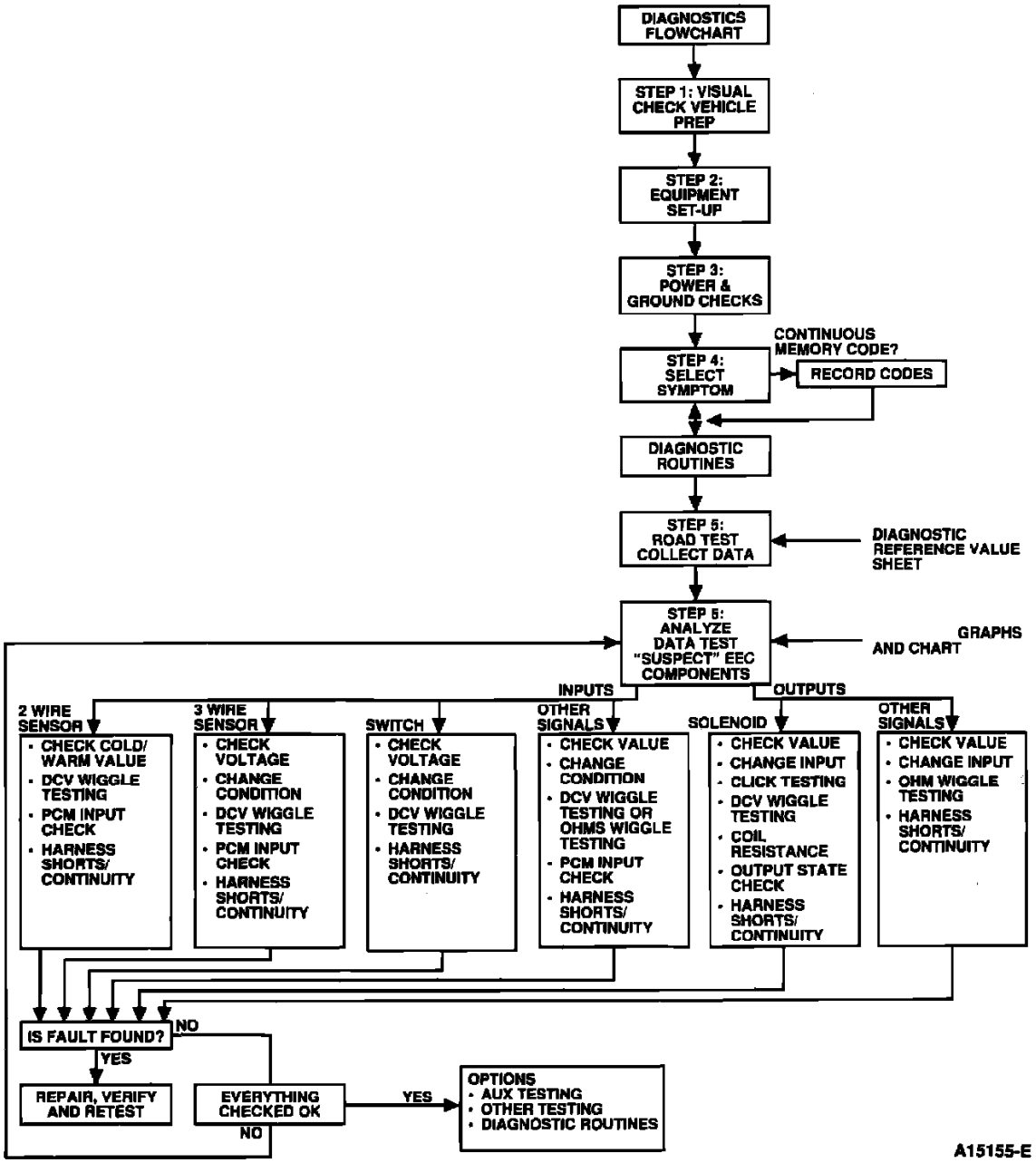

Diagnostic Summary Flowchart

Visual Check and Vehicle Preparation

NOTE: Be careful not to move anything while inspecting the vehicle. By doing so, you could affect a possible fault and be unable to locate the original problem.

VISUAL CHECK

1. Inspect air cleaner and inlet ducting.
2. Check all engine vacuum hoses for damage, leaks, cracks, blockage, proper routing, etc.
3. Check EEC system wiring for proper connections, bent or broken pins, corrosion, loose wires proper routings, etc....
4. Check PCM, sensors, and actuators for physical damage.
5. Check engine coolant level.
6. Check transaxle fluid level and quality.
7. Make all needed repairs before continuing.

VEHICLE PREPARATION

1. Perform all safety steps required to start and run vehicle tests:
   - apply parking brake,
   - place selector lever in Park (A/T) or Neutral (M/T), and
   - block drive wheels.
2. Turn OFF all electrical loads - radio, lights, A/C-heater fans, etc....
3. Warm engine to operating temperature.
4. Turn engine OFF and proceed with equipment setup.

Road Test

RECREATING THE SYMPTOM

In order to diagnose driveability problems, the technician must collect data on how the Electronic Engine Control **(EEC)** system is sensing and reacting.

After a thorough visual and mechanical inspection is completed, the EEC portion is diagnosed. Through the use of a Monitor and a Recorder, these signals can be inspected for shorts, opens, component failures, or erratic behavior.

Also, the data received from the Monitor and Recorder can reveal the presence of mechanical problems.

PREPARATION

1. Place Monitor (and Recorder, optional) in a convenient location inside the vehicle. Secure any cables away from moving engine parts and ignition components.

2. Place the proper overlay card on the monitor. Refer to **Equipment Setup**.

3. List the EEC sensors and actuators that could cause the condition. These signals will be monitored during the road test.

4. If a Recorder is used, select the first 8 signals listed to channels 1-8 (one signal per channel). Connect the jumpers from the Input/Output (I/O) jacks to the appropriate channels.

5. Select the proper Diagnostic Reference Value Chart. This chart lists EEC sensor and actuator values at various operating conditions. **NOTE:** The values given on these sheets are only approximations.

6. In order to safely perform a road test, it is necessary that a second person accompany the driver. The second person can select signals, observe changes, and record notes.

USE OF PERIPHERAL INPUTS

Some useful signals may require the use of certain peripheral (auxiliary) devices. These devices can be inserted into the AUX jacks of the monitor or the ADAPT 1/ADAPT 2 input jacks of the recorder.

REMINDERS

The purpose of the road test is to recreate the driveability problem by duplicating the conditions that caused it. The road test is a suggested but optional part of this section. It is important that the road test be performed safely. Use the provided seat belts and operate the vehicle in a safe manner, obeying all traffic rules and regulations.

OBSERVATIONS

During the road test various EEC signals are chosen and their values shown. Also, the following observations can be made as the road test is performed:

EEC Values -- Compare road test values at various operating conditions with those listed in Diagnostic Reference Values. For more details, refer to **Diagnostic Reference Values.**

Monitor Lights -- Observation of the monitor lights give quick information about the condition of many EEC signals. For example, these lights can quickly reveal the status of many signals, telling the technician whether an output should be energized or not. Optional signals are printed in yellow labels.

Wiggle Tests -- By using the wiggle test mode during Key On Engine Running tests, often an intermittent device or wire will trigger the alarm. The Direct Current Voltage (DCV) wiggle mode in particular is very sensitive to sudden, erratic changes in an EEC-IV harness or component.

ROAD TEST PROCEDURE

1. Using the appropriate routine, select the first listed EEC device on Monitor pin selector "A".

2. Turn ON the monitor (and Recorder, if used). Start and drive the vehicle.

3. If the recorder is installed, put the function switch in RECORD mode and and press the START RECORD button.

4. Drive the vehicle, creating conditions associated with the driveability problem.

5. When the symptom occurs, the passenger should observe changes in the selected EEC signal. Information should be recorded onto paper with other notes about the symptom, device, or operating conditions. If the recorder is used the capture button should be pressed.

6. Record information about the symptom, operating condition, and EEC signal values received from the monitor (or recorder in playback mode).

7. If necessary, select other EEC signals from Diagnostic Routines and attempt to recreate the problem again. Observe and record the results. To interpret the data received from the road test, refer to **Analyzing Data.** See: Initial Inspection and Diagnostic Overview/With EEC IV (OBD I-A System)/Diagnostic Strategies/Analyzing Data

Equipment Setup

CAUTION: Vehicle ignition switch must be turned OFF before disconnecting the EEC harness cable from the EEC processor.

EQUIPMENT SETUP

1. Check for trouble codes. Codes must be recorded before disconnecting the PCM harness, otherwise they will be erased.
2. Install Monitor. Refer to installation procedure below.

Year	Vehicle	Engine	Monitor	
			Adapter	Overlay
1993	Festiva	1.3L	007-00057	37
1993	Escort/Tracer	1.8L MTX	007-00057	36
1993	Escort/Tracer	1.8L 4EAT	T92C-6000-AH	60
1993	Capri	1.6L Non-Turbo	007-00038	46
1993	Capri	1.6L Turbo	007-00038	47
1993	Probe	2.0L 4EAT	T92C-6000-AH	61
1993	Probe	2.5L	T92C-6000-AH	62

Monitor Adapter And Overlay Chart

3. Select proper Monitor overlay card for the engine.
4. If a Recorder is available, do not install at this time.

NOTE: If the correct overlay card for the engine is not available, the Monitor may still be used with some limitations. In this situation, no overlay card is used and the technician must rely on the pin number label on PIN SELECTOR A and the light array to identify PCM signals. The Monitor can only be used in the manual mode (DCV, OHMS). Do not substitute an incorrect overlay because the readings in AUTO mode will not be correct and the signal labels on the overlay may also be different.

MONITOR INSTALLATION

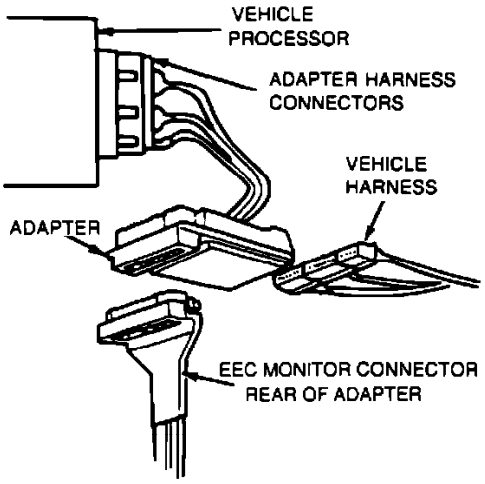

Monitor Adapter Harness Hookup

1. Ignition power switch must be turned OFF before disconnecting the PCM harness from the PCM and installing the Monitor. Record any trouble codes obtained during Quick Test before removing the harness; removal of the harness results in loss of Keep Alive Memory Power **(KAPWR)**, resulting in loss of any codes.
2. Remove lid from Monitor and ensure that POWER switch is OFF.
3. Disconnect PCM harness from PCM.
4. Inspect connector for loose or damaged pins, corrosion, or loose wires.
5. Attach appropriate PCM adapter cable to PCM.
6. Attach Monitor connector to PCM adapter cable and tighten 10 mm bolt on connector until snug. Do not overtighten. Attach vehicle harness to adapter cable.
7. Select correct overlay card and install on Monitor front panel.
8. Carefully position Monitor where it can be viewed. Stay away from moving parts, ignition wires, and coil.
9. Check to see that all electrical devices are off - radio, lights, power windows, A/C, rear window defroster, etc...
10. Follow manufacturer directions for running tests.

Symptom Analysis

PURPOSE OF THIS STEP

When an intermittent symptom occurs, get a full description of the symptom and the driving mode when it happens.

FINDING PROBABLE CAUSES

List sensors and actuators that could cause the symptom.

Refer to the **Graphs and Charts** and **Diagnostic Reference Values**.

Remember: Conditions and driving mode can provide clues to the cause of a symptom. For example, a hard start symptom with engine cold could indicate an Engine Coolant Temperature **(ECT)** sensor malfunction.

CHECK THE BASICS

Always make sure things like fluid levels, maintenance schedules, and proper vehicle use are okay. Old, clogged fuel filters can cause intermittent problems, as can low coolant levels and poor oil quality.

Good power and ground connections, and good harness condition are very important. Poor grounds and power connections (to injectors, for example) can cause intermittent symptoms.

Analyzing Data

TWO AND THREE WIRE SENSORS

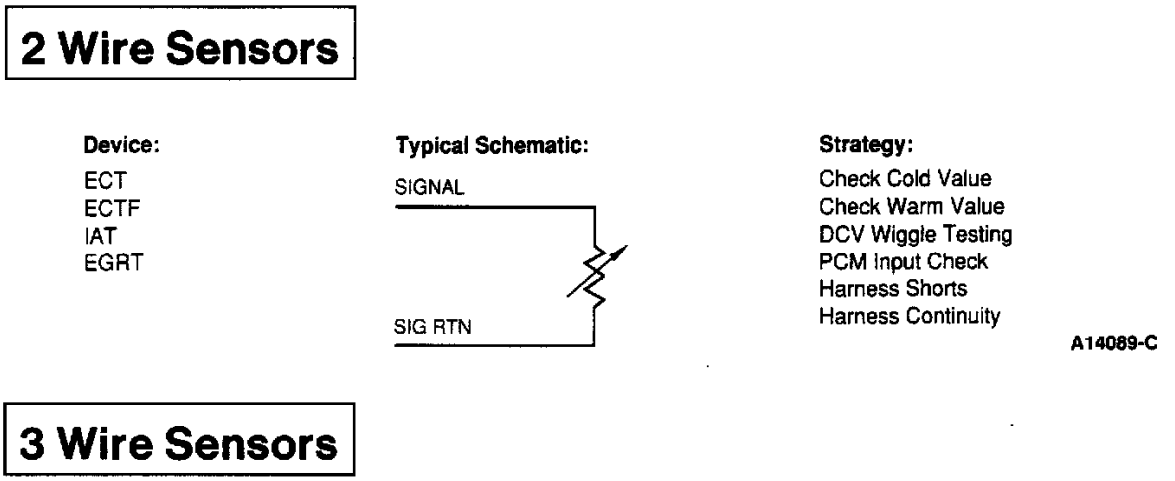

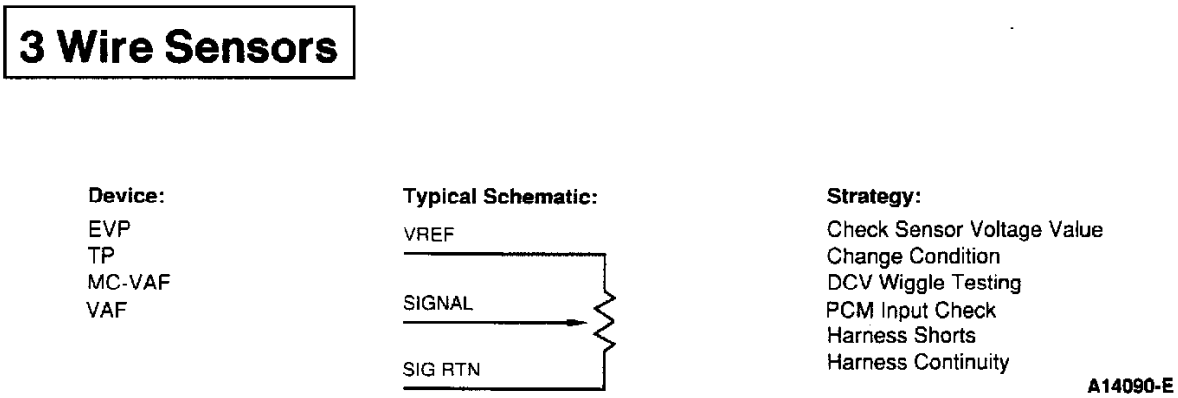

2 And 3 Wire Sensors

SWITCHES AND OTHER INPUT SIGNALS

Switches

Device:

ACS	PSP	MLP
BOO	BLMT	MLPD
IDL	HDLP	MLP1
CPP	VST	MLP2
PNP	ACS	MLPR
ECTS	HPS	SCPP
MMS	CCPS	ODS
DRL	FAN	WOT
	DEF	MLPOD
		MLPL

Typical Schematic:

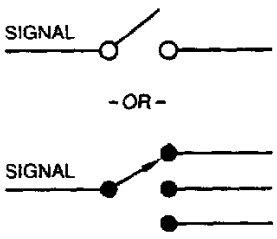

Strategy:

Check Sensor Voltage Value
Change Condition
DCV Wiggle Testing
Harness Shorts
Harness Continuity

A14091-F

Other Input Signals

Device:

CID	PIP	CKP1
KS	STI	BARO
IDM	VSS	MAF
VST	RTS2	O2S
TRS	HO2S	CKP
PNP	RHO2S	DSS
RTS1	LHO2S	MTX/ATX
VMREF	PSG	TCS
CAN/CAL	CIDREF	TCS RET

Typical Schematic:

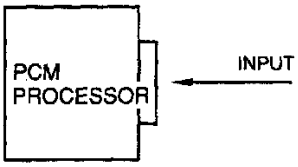

Strategy:

Check Sensor Voltage Value
Change Operational Condition
DCV Wiggle Testing
or
Ohms Wiggle Testing
PCM Input Check
Harness Shorts
Harness Continuity

Switches And Other Input Signals

SOLENOIDS/RELAYS AND OTHER OUTPUT SIGNALS

Solenoids/Relays

Device:

INJ	SS1	HSF
CANP	SS2	BOOST
VRIS1	SS3	
EGRC	ACR	
EGRV	FPR	
LFAN	DRL	
HFAN	FPRC	
EVR	LPS	
DSS	TCC	
IAC	CFAN	
DEF	WAC	
VRIS2	HSIA	

Typical Schematic:

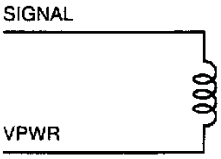

Strategy:

Check Solenoid/Relay Voltage Value
Change Input
Click Testing
DCV Wiggle Testing
Coil Resistance
Output State Check
Harness Shorts
Harness Continuity

A14093-E

Other Output Signals

Device:

SML	BARO
MIL	ODL
STO	MSL
SPOUT	KCU
ICM	OBI

Typical Schematic:

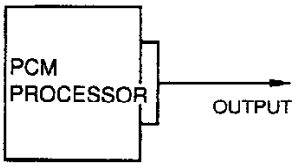

Strategy:

Check Sensor Voltage Value
Change Input
Ohm Wiggle Testing
Harness Shorts
Harness Continuity

A14094-E

Solenoids/Relays And Other Output Signals

Once the road test is completed, the results need to be analyzed to find and correct the exact fault that caused the problem.

INSIGHTS FROM THE RECORDER

The use of the recorder greatly enhances the view of the EEC operation when the fault occurs and allows for a systems approach to the problem. Look for abnormal behavior or values that are clearly incorrect. Inspect the signals for abrupt or unexpected changes. For example, during a steady cruise, most of the sensor values should be fairly stable. Signals such as the Throttle Position (TP), Manifold Absolute Pressure (MAP), and engine rpm changing abruptly during a steady cruise are clues to correcting the problem. Look for agreement in related signals. For example, if the TP signal changes during gentle acceleration, a corresponding change should occur in MAP, rpm, and ignition timing signals. Make sure that the signals act in proper sequence. An increase in rpm after the TP signal is increased is expected. However, if the rpm increases without a TP signal change, then a problem may exist.

ANALYZING METHODS

Use any of the following methods to further diagnose a suspected EEC signal or device. Some methods pertain to a certain type of EEC device. Follow the given strategy listed for each type of EEC signal listed in EEC-IV Monitor Measurement Methods. See: Scan Tool Testing and Procedures/With EEC IV (OBD I-B System)/Intermittent Fault Diagnosis/EEC-IV Monitor Measurement Methods

- Change condition to cause response by input
- Change input and verify output response
- Click testing (solenoids/relays)
- Coil resistance (solenoids/relays)
- EEC input/output check
- Harness continuity
- Harness shorts
- Output state check (solenoids/relays)
- Wiggle testing (DCV or OHMS)

EEC-IV Monitor Measurement Methods

CHANGE CONDITION TO CAUSE RESPONSE BY INPUT

Purpose: To verify the sensor receives and responds to changes.

- Key ON engine OFF/RUNNING; AUTO or DCV mode.
- Select sensor on pin selector "A".
- Create a condition or change a condition.
- Observe the change in sensor value. Verify the change with the appropriate graph or chart.

  Examples: Move the throttle, watch the Throttle Position **(TP)** and Manifold Absolute Pressure **(MAP)** sensor values. Warm up the engine, watch the Air Charge Temperature **(ACT)** and Engine Coolant Temperature **(ECT)** values decrease. Depress the brake pedal, watch the Brake On/Off **(BOO)** light.

CHANGE CONDITION AND VERIFY OUTPUT RESPONSE.

Purpose: To verify EEC module and actuator circuit responds to sensor input.

- Key ON engine OFF/RUNNING; AUTO or DCV mode.
- Select actuator on pin selector "A".
- Create a change for the input device with the switchbox or vehicle operation.
- Observe the change in the actuator signal and observe the light.

Examples: Increase throttle position (accelerate), observe SPOUT increase. Move Exhaust Gas Oxygen **(EGO)** switch to lean, observe SPOUT increase.

CHECK VALUE

Purpose: To verify the correct value for a device or signal.

- Key ON engine OFF/RUNNING; AUTO or DCV mode.

- Select signal from pin selector "A" or "B".

- Since various units are used, refer to meter function light.

CLICK TESTING (RELAYS/SOLENOIDS)

Purpose: Activate solenoid or relay from monitor and observe device.
- Key ON engine OFF; AUTO or DCV mode.
- Select the relay or solenoid signal on pin selector "A" and correct ground on reference pin selector.
- Insert switchbox into selector pin jacks.
- Push the small red button to turn ON relay or solenoid.
- Listen for a click and observe the signal light for illumination.

COIL RESISTANCE (SOLENOIDS/RELAYS)

Purpose: Measure for correct resistance value of device.
- Key OFF; Ohms mode.
- Select signal from pin selector "A".
- Select correct ground from reference pin selector.
- Select ohms range switch.
- Wiggle test light will illuminate and the speaker will sound. Press the wiggle test reset button.
- Manual test light should be blinking, value in ohms units.

EEC-IV INPUT CHECK (STO)

Purpose: Confirm that the Engine Control Assembly (ECA) sets CHECK ENGINE LIGHT for certain EEC sensors.
- Key ON engine OFF; DCV mode.
- Select sensor from pin selector "A".
- Set reference pin selector to signal return (sig rtn).
- Insert switchbox into selector pin jacks.
- Move the AIM switch to key ON engine OFF position.
- Push the small red button on switch box and observe STO light turn ON and speaker sound while the button is pressed.
- Return the AIM switch to the OFF position.

HARNESS OPENS

Purpose: Check harness for open circuits.
- Key OFF; ohms mode.
- Select signal from pin selector "A".
- Disconnect the sensor/actuator where the signal is to be checked.
- Connect a jumper wire from reference pin jack (black) to signal pin on harness to be tested.
- Check for continuity.

HARNESS SHORTS

Purpose: Check harness for short to ground or power.
- Key OFF; ohms mode.
- Select signal from pin selector "A".
- Set ohms range switch to 200K.
- Disconnect the sensor/actuator to be tested.
- Disconnect the EEC-IV processor, then reconnect monitor to EEC-IV harness (optional).
- Select various power or ground signals from reference pin selector. Example: reference voltage (VREF), signal return (SIG RTN), power ground (PWR GND).
- Read resistance: 10K or less indicates a short, higher than 10K indicates no short.

OUTPUT STATE CHECK (SOLENOIDS/RELAYS)

Purpose: Exercise actuator devices after key ON engine OFF Self Test.
- Key On Engine OFF; AUTO or DCV mode.
- Move AIM switch to key ON engine ON position and wait for output codes (beeps) to end.
- Completely depress and release the throttle. Observe the signal light turn ON.
- Completely depress and release the throttle. Observe the signal light turn OFF.
- Return AIM switch to OFF position.

WIGGLE TESTING (DCV OR OHMS)

Purpose: Sensitive DCV or ohms testing for intermittent harness or device.

- Key OFF for ohms wiggle; key ON engine OFF/RUNNING for DCV wiggle.
- Use DCV wiggle for all actuators, power and grounded signals, all sensors which use DCV units in AUTO mode; all others use ohms wiggle. Examples: ohms wiggle MAP, INJ; DCV wiggle - TP, ECT. DCV wiggle is more sensitive than the ohms wiggle test.
- Select the proper signal from pin selector "A".
- Select the correct ground from reference pin selector.
- Tap components, wiggle and flex the harness and connectors.
- The wiggle and test light will activate when a change is sensed.

Strategy For Locating Faults

If the value of a ground or power circuit is out of range or a signal is suspected as being faulty, then use the following methods to determine the fault.

- Inspect circuit wires for visible breaks or shorts, loose connectors, bent or pushed out connector pins, or corrosion.

- Test battery for low voltage and current.

- Perform monitor wiggle testing on the problem circuit. An audible beep will sound if an intermittent short or open is present.

- Perform click testing for those signals which activate relays or solenoids. Using the switch box in the selector pin jacks allows relays and solenoids to be activated.

- If no faults found, proceed with Power and Ground tests.

TEST STEP	RESULT ▶	ACTION TO TAKE
PG1 POWER TEST		
• Key off. • Monitor power on. • Check the green LED KAPWR. • **Is the LED on?**	Yes ▶ No ▶	GO to **PG2** . REPAIR the KAPWR circuit to the Battery.

PG1 Power Test

TEST STEP	RESULT ▶	ACTION TO TAKE
PG2 MONITOR LED TEST		
• Key off. • Monitor power on. • Place the light test switch to the test position. • Check all LEDS on the Monitor including the 6 yellow LEDS in the Remote Display. • **Did all the LEDS light and did the audible beep sound?**	Yes ▶ No ▶	GO to **PG3** . The Monitor is faulty and requires repair.

PG2 Monitor LED Test

TEST STEP	RESULT ▶	ACTION TO TAKE
PG3 MONITOR REMOTE DISPLAY TEST		
• Key off. • Monitor power on. • Depress the Remote Display Button. • **Does the Display indicate "1888"?** **NOTE: Temperature extremes above 158°F (70°C) will result in a black display and cold temperature extremes will cause the display to run slow. Display will return to normal during normal ambient temperatures.**	Yes ▶ No ▶	GO to PG4. The Monitor is faulty and requires repair.

PG3 Monitor Remote Display Test

TEST STEP	RESULT ▶	ACTION TO TAKE
PG4 POWER VOLTAGE LEVEL CHECKS		
• Key on, engine off. • Monitor power on. • Place Pin Selector A to Pin Selector B position. • Verify voltages in the following Chart:	Yes ▶ No ▶ — VPWR ▶ — KAPWR ▶ — VREF ▶	GO to PG5. REPAIR the circuit(s) at fault. EEC Harness, Power Relay, Battery, Ignition Switch, Cables EEC Harness, Battery, Ignition Switch EEC Harness, EEC Module

POWER	
Signal	Value
VPWR	Greater than 10.5V
KAPWR	Greater than 10.5V
VREF	4.5V-5.5V

• **Did all the voltage levels correspond to the Chart?**

PG4 Power Voltage Level Checks

TEST STEP	RESULT ▶	ACTION TO TAKE
PG5 GROUND VOLTAGE LEVEL CHECKS		
• Key on, engine off. • Monitor power on. • Verify voltages in the Chart below:	Yes ▶	GO to PG6.
	No ▶	REPAIR the circuit(s) at fault.

GROUND		
Signal	**Value**	**Application**
PWRGND	0 + .5V	All Engines
SIGRTN	0 + .5V	All Engines
TCSRET (2N)	0 + .5V	2.2L 4EAT
CAN/CAL (2H)	0 + .5V	1.8L California
MT/AT (2J)	0 + .5V	1.3L MTX
MT/AT (1U)	0 + .5V	2.2L TC MTX
START (1C)	10 - 14V Cranking	All Engines

• **Do all the voltage levels correspond to the chart?**

PG5 Ground Voltage Level Checks

TEST STEP	RESULT ▶	ACTION TO TAKE
PG6 OTHER POWER CHECKS		
• Key on, engine off. • Monitor power on. • Verify voltages in the Chart below:	Yes ▶	GO to Symptom Analysis.
	No ▶	REPAIR the circuit(s) at fault.

POWER		
Signal	**Value**	**Application**
VMREF	7-9V	1.6L and 2.2L (All)
CAN/CAL (2H)	10-14V	1.8L Canada
MT/AT (2J)	10-14V	1.8L 4EAT
MT/AT(1U)	10-14V	2.2L TC 4EAT
START (1C)	10-14V Cranking	All Engines

• **Do the voltages correspond to the Chart?**

PG6 Other Power Checks

Testing Notes

1. Diagnostic reference values are based on engine at operating temperature; between **180°-220°F (82°-104°C) / ECT value = 0.8-0.5 Volts.**
2. KOEO and hot idle test measurements are taken with vehicle in Park (ATX), Neutral (MTX).
3. Reference values shown in charts may differ substantially between vehicles due to various factors: component tolerance, driving conditions, weather, etc... The values on these charts were obtained at approximately 600 feet altitude above sea level at ambient temperatures from **10° -21°C (50°-70°F).**
4. WAC and FP do not correspond to values given in the Pinpoint Tests due to differences in the way these signals are measured. The Monitor measures these signals with reference to PWR GND (60/40).
5. O2S in switching mode ranges from **0.2-0.9 DCV.**

NOTE: For tests involving switches, the values will be: switch OFF (released) / switch ON (depressed).

Inputs	SIG Pin #	REF. Pin #	KOEO	Units	Hot Idle	30 MPH	55 MPH	Units
CCPS$$	1R	PWRGND	12/0	DCV	14/0	14/0	14/0	DCV
BLMT$	1P	PWRGND	12	DCV	14	14	14	DCV
BOO	1F	PWRGND	0/12##	DCV	0/14##	0	0	DCV
CID	2B	PWRGND	N/A	RPM	185	315	510	RPM
CKP1	2A	PWRGND	N/A	RPM	715	1175	2090	RPM
DEF***	1O	PWRGND	12/0-1	DCV	14/1	14/1	14/1	DCV
DRL	1K	PWRGND	12/0-1	DCV	14/1	14/1	14/1	DCV
ECT	2E	SIGRTN	2.5#	DCV	0.49	0.58	0.57	DCV
ECTF	2K	SIGRTN	4.5#	DCV	0.78	1.11	1.14	DCV
HDLP***	1J	PWRGND	0/12	DCV	0/14	0/14	0/14	DCV
HO2S	2C	PWRGND	0-1	DCV	0.1	0.65	0.3	DCV
IAT	2F	SIGRTN	2.5#	DCV	1.89	2.78	3.04	DCV
IDL	1T	PWRGND	0/12	DCV	0	13	13	DCV
MAF	2L	PWRGND	1-1.5	DCV	1.9	2.4	2.63	DCV
MLP*	1V	PWRGND	0	DCV	0	13	13	DCV
MLP1**	2N	PWRGND	0	DCV	0	0	0	DCV
MLP2**	2O	PWRGND	0	DCV	0	0	0	DCV
MLPD**	2P	PWRGND	0	DCV	0	13	13	DCV
MLPR**	2M	PWRGND	0	DCV	0	0	0	DCV
ODS	1H	PWRGND	12/0	DCV	13/0	13/0	13/0	DCV
PSG+	3F	PSG-	N/A	RPM	10790	18000	19730	RPM
PSP	1N	PWRGND	12	DCV	13.5	13.5	13.5	DCV
STI	1L	PWRGND	12	DCV	13.5	13.5	13.5	DCV
TOT	2H	SIGRTN	3.5	DCV	1.01	1.45	1.06	DCV
TP	2D	SIGRTN	0.5/4	DCV	0.49	0.59	1.0	DCV
VSS	1M	PWRGND	N/A	MPH	0	17	30	MPH
VST	1D	PWRGND	0	DCV	0	0	0	DCV

Outputs	SIG Pin #	REF. Pin #	KOEO	Units	Hot Idle	30 MPH	55 MPH	Units
ACR$$***	1S	PWRGND	12/1	DCV	13.5/1	13.5/1	13.5/1	DCV
CANP	3N	PWRGND	12	DCV	13.5	2.3	1.45	DCV
DSS	3T	SIGRTN	0	DCV	0	0	0.02	DCV
EVR***	3K	PWRGND	12	DCV	1.08	1.12	1.15	DCV
FPR	3L	PWRGND	12	DCV	0.5	0.5	0.5	DCV
FPRC	3M	PWRGND	12	DCV	13.5	13.5	13.5	DCV

Diagnostic Reference Values (Part 1)

Outputs	SIG Pin #	REF. Pin #	KOEO	Units	Hot Idle	30 MPH	55 MPH	Units
HFAN	3I	PWRGND	12	DCV	13.6	13.6	13.6	DCV
IAC	3O	PWRGND	12	DCV	9.65	8.37	7	DCV
ICM	1I	PWRGND	N/A	RPM	715	1175	2090	RPM
INJ1	3W	PWRGND	N/A	mSEC	3.7	6.5	7.6	mSEC
INJ2	3X	PWRGND	N/A	mSEC	3.7	6.5	7.6	mSEC
INJ3	3Y	PWRGND	N/A	mSEC	3.7	6.5	7.6	mSEC
INJ4	3Z	PWRGND	N/A	mSEC	3.7	6.5	7.6	mSEC
LFAN	3G	PWRGND	12	DCV	13.5	13.5	13.5	DCV
LPS	3V	SIGRTN	N/A	DCV	9	8.37	7.5	DCV
MIL	1E	PWRGND	0	DCV	13.6	13.6	13.6	DCV
ODL	1Q	PWRGND	12/2	DCV	13/2	13/2	13/2	DCV
SML	1C	PWRGND	0-1	DCV	1-13@	1-13@	1-13@	DCV
SS1	3P	SIGRTN	0	DCV	0	12	12	DCV
SS2	3Q	SIGRTN	0	DCV	0	0	0	DCV
SS3	3R	SIGRTN	12	DCV	12	12	12	DCV
STO	1G	PWRGND	0-1	DCV	12	12	12	DCV
TCC	3U	SIGRTN	0	DCV	0	5.75	0	DCV
TCCC	3S	SIGRTN	0	DCV	0	13	13	DCV

NOTE: Reference values shown may vary approximately ±20% depending on operating conditions and other factors.

$$ Switch is ON with A/C ON.

$ 0 volts in position 3 or more.

At 20°C (68°F).

* 0 volts in P or N position; 12 volts in R, D, 1, or 2.

** In gear, 12 volts.

@ Value switches between 1 volt and 13 volts.

12 volts with brake pedal depressed, 0 volts with brake pedal released.

*** Use manual DC volts when making measurements.

Diagnostic Reference Values (Part 2)

Oxygen Sensor Testing

CAUTION: Use ONLY a high impedance Digital Volt Ohm Meter (DVOM) when testing components on computerized vehicles.

Set voltmeter to read VOLTS only (not ohms). Be sure external voltage is not applied to sensor lead; sensor damage may occur.

1. Make sure vehicle is at normal operating temperature. Run engine at 2500 RPM for 3 minutes.
2. With engine OFF, connect negative voltmeter terminal to engine ground. Set meter to 2 volts DC. Unplug oxygen sensor lead. Connect voltmeter positive lead to sensor.
3. Create full lean condition for 10 seconds; voltage should decrease to 0.2 volts or less and remain there.
4. Create full rich condition for 10 seconds; voltage should increase to 0.8 volts or more and remain there.
5. If sensor voltage fails to vary according to test, it is defective.
6. Reconnect sensor and clear codes.

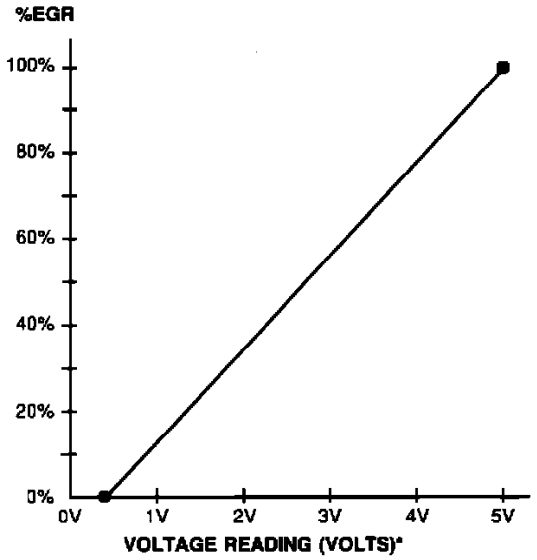

%EGR	Voltage*
0	0.4–0.8
10	0.7–1.1
20	1.1–1.5
30	1.4–1.8
40	1.8–2.2
50	2.1–2.5
60	2.5–2.9
70	2.8–3.2
80	3.2–3.6
90	3.5–3.9
100	3.9–4.3

EGR **SENSOR DATA** *** Voltage values calculated for VREF = 5.0V (These values may vary ± 15% due to sensor and VREF variations.)**

EGR Sensor Data

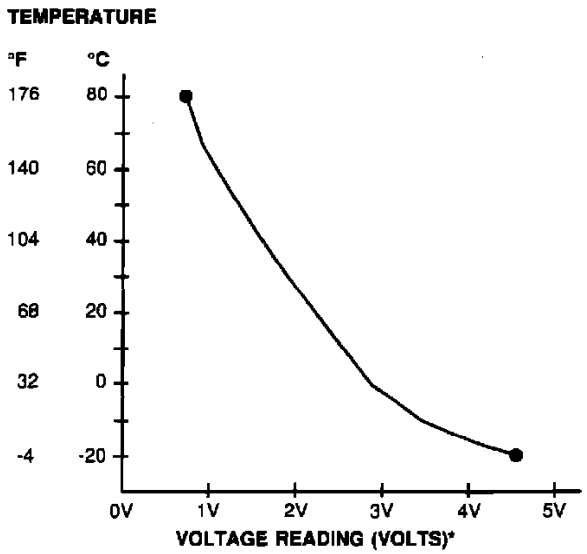

Temperature °F	°C	Voltage* Volts
-4	-20	4.7
32	0	3.4
68	20	2.5
104	40	2.0
140	60	1.2
176	80	0.7
194	90	0.45
203	95	0.33
212	100	0.2

ECT SENSOR DATA *** Voltage values calculated for VREF = 5.0V (These values may vary ± 15% due to sensor and VREF variations.)**

ECT Sensor Graph

Engine	1.3L	1.6L	1.8L	2.0L 4EAT	2.5L
Engine Running	177-216 kPa 25-31 psi	196-216 kPa 37-41 psi	206-255 kPa 30-37 psi	206-266 kPa 30-38 psi	206-255 kPa 30-36 psi
Key ON, Engine Off (Test Connector Jumped, Pump Running)	240-279 kPa 35-40 psi	255-289 kPa 37-42 psi	265-314 kPa 38-46 psi	255-314 kPa 37-46 psi	255-314 kPa 37-46 psi

Fuel Pressure Specifications

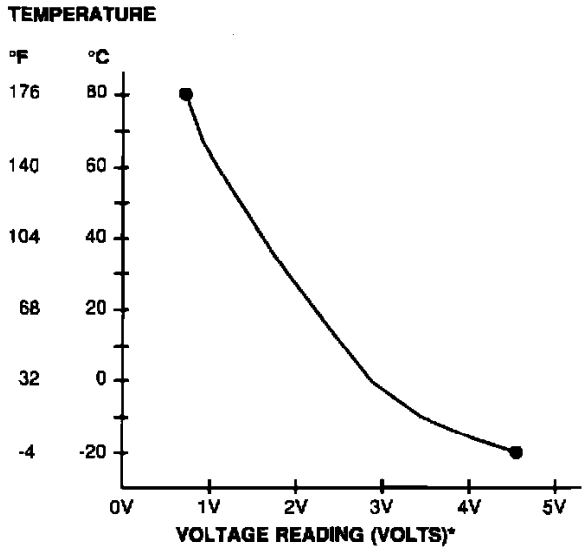

Temperature °F	°C	Voltage* Volts
-4	-20	4.7
32	0	3.4
68	20	2.5
104	40	2.0
140	60	1.2
176	80	0.7

IAT SENSOR DATA * Voltage values calculated for VREF = 5.0V (These values may vary ± 15% due to sensor and VREF variations).

IAT Sensor Graph

Engine	Actuator	PCM Pin	Reference	Resistance (ohms)
1.3L 1.8L MTX	BANK1	2U	VPWR	9.0
	BANK2	2V	VPWR	9.0
	CANP	2X	VPWR	30
	VICS	2S (1.8L MTX)	VPWR	50
	IAC	2W	VPWR	16
	FPRC	2T (1.8L MTX)	VPWR	50
1.6L	BANK1	3E	VPWR	14
	BANK2	3C	VPWR	14
	CANP	2P	VPWR	20
	IAC	2Q	VPWR	20
	FPRC	2K	VPWR	20
1.8L 4EAT	BANK1	3U	VPWR	9.0
	BANK2	3V	VPWR	9.0
	CANP	2O	VPWR	30
	VICS	3I	VPWR	50
	IAC	3Q	VPWR	16
	FPRC	3M	VPWR	50
2.0L 4EAT	CANP	3N	VPWR	30-36
	EVR	3K	VPWR	33-45
	FPRC	3M	VPWR	33-45
	IAC	3O	VPWR	7.7-12
	INJ1	3W	VPWR	12-17
	INJ2	3X	VPWR	12-17
	INJ3	3Y	VPWR	12-17
	INJ4	3Z	VPWR	12-17
2.5L	CANP	2O	VPWR	30-34
	EGRC	3P	VPWR	30-34
	EGRV	3O	VPWR	30-34
	FPRC	3M	VPWR	30-34
	VRIS1	3I	VPWR	33-39
	VRIS2	3J	VPWR	33-39
	IAC	3Q	VPWR	10.7-12.3
	INJ1	3U	VPWR	12-16
	INJ2	3V	VPWR	12-16
	INJ3	3W	VPWR	12-16
	INJ4	3X	VPWR	12-16
	INJ5	3Y	VPWR	12-16
	INJ6	3Z	VPWR	12-16

NOTE: All tests made with monitor in manual ohms, key OFF, and PCM disconnected.

Static Resistance Values

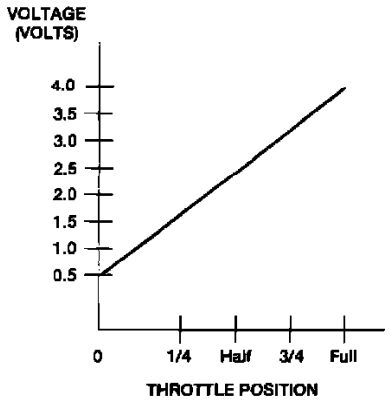

Throttle Position	Voltage (Volts)
0	0.5
1/4	1.3
Half	2.2
3/4	2.9
Full	3.7

NOTE: Voltage Values May Vary ± 15%.

A16834-B

TP Sensor Graph

Technical Service Bulletins

All Technical Service Bulletins:

Number	Date	Name
06-14-4	Jul 06	A/T - Mercon V ATF Usage
03-18-1	Sep 03	Keyless Entry System - Service Tips
03-14-8	Jul 03	A/T - Cooler Flushing Service Tips
02-17-6	Sep 02	A/T - Inadvertent Shift Interlock Disabling
02-16-4	Aug 02	Audio System - Whining/Buzzing Noise From Speakers
01-23-6	Nov 01	Engine Coolant - Propylene Glycol Recommendations
01-10-12	May 01	Wire Harness - Terminal Repair Kit
01-7-3	Apr 01	Fuel Pump - Whine Heard Through Radio Speakers
00-17-1	Aug 00	Ignition - Hard/No Start, Distributor Stator Replacement
99-26-9	Dec 99	Fuel Economy - Customer Expectation vs. Vehicle Usage
99-19-4	Sep 99	Brakes - Vibration/Inspection Service Tips
99-19-6	Sep 99	A/C - Identification of Non Approved Refrigerants
99-15-2	Jul 99	A/T - Transmission Flush and Fill Tool Available
99-8-16	May 99	Motor Oil - Viscosity Grade Recommendation
98-26-2	Jan 99	Fuel - Volatility Related Driveability Concerns
98-24-6	Dec 98	Electrical - New Terminal Grease Released For Service
98-23-10	Nov 98	Engine - Lean Driveability Symptoms
98-20-10	Oct 98	Exhaust System - Buzzing/Rattling Noise
98-17-1	Sep 98	Seat Leather - Cleaning Procedure Tips
98-12-5	Jun 98	A/C - Filtering Refrigerant After Compressor Replacement
98-9-9	May 98	Fuel Injectors - Non Warranty Reimbursement Testing
98-7-4	Apr 98	Engine - New Gasket Sealer
98-5A-13	Mar 98	Brakes - New Silicone Compound/Grease
98-5A-5	Mar 98	Hub-Mount Brake Rotor Machining Equipment
98-5A-11	Mar 98	Brakes - Elimination Of Sanding Rotors And Drums
98-5A-4	Mar 98	Lug Nuts - Proper Installation/Torqueing Procedure
98-5A-12	Mar 98	Vehicle - Towing Behind RVs Guidelines
98-4-8	Mar 98	Air Conditioning - R12 to R134A Retrofit Kit
98-2-7	Feb 98	Air Conditioning - Musty/Mildew Type Odors
97-24-13	Nov 97	Remote Keyless Entry - Diagnostic Service Tips
97-19-1	Sep 97	Door Glass - Water Leaks/Wind Noise
97-19-11	Sep 97	Heater Core - On Car Pressure Test For Warranty Claim
97-19-4	Sep 97	Brake and Rotor - Service Tips
97-17-2	Aug 97	Rear View Mirror - Reattachment
97-17-3	Aug 97	Sliding Roof Panel - Rattle/Squeak/Creak Noise
97-11-1	May 97	Door - Replacement Service Procedure
9774	Mar 97	A/T - 4EAT Harsh 1-2 Upshift
9733	Feb 97	MAF Sensor - MIL ON/DTC's Set/Driveability Concerns
962612	Dec 96	Torque Converter - Cleaning and Replacement Guidelines
96254	Dec 96	Air Bag System - Error Code 51Diagnostics/Repair
962516	Dec 96	Axle Shafts - Fluid Leaks
96246	Nov 96	Electrical Diode - Identification and Replacement
96249	Nov 96	A/T Torque Converter - Leak Test Procedure
96232	Nov 96	Engine - Reduced Power On Acceleration
96221	Oct 96	Windshield/Interior Glass - Fog/Film
96225	Oct 96	Mass Air Flow Sensor - Assembly Replacement
96213	Oct 96	Engine - Noise/Misses/Stalls/Runs Rough/Low Power
96208	Sep 96	A/C - New O Ring Applications
96207	Sep 96	A/C O Ring - Availability and Applications
961710	Aug 96	A/C - R12 Refrigerant Substitutes Service Tip
96156	Jul 96	A/C System - Service TSB List
96107	May 96	Fuel - California Reformulated Gasoline
ATRATB364	Jan 96	A/T - G4A-EL & F4EAT Trouble Code Identification
ATRATB350	Jan 96	A/T - G4A-EL 3-4 Shift Hunt
95241	Dec 95	Steering Wheel - Off Center After Hard Turn
95211	Oct 95	Air Bag Modules - Discolored/Marred Covers
95216	Oct 95	Fuel Gauge - Reads Inaccurately
95B70	Oct 95	Campaign - Fuel Pump/Sender Modification
95182	Sep 95	Recycled Engine Coolant - Service Tips
95184	Sep 95	Air Conditioning - Approved Flushing Procedures
93S78	Sep 95	Recall - Child Restraint Tether Bolt Replacement
95174	Aug 95	Glove Compartment - Improved Lock
951610	Aug 95	A/T - New Rotunda Fluid Changer Service Tip
95143	Jul 95	Headlamp Door - Erratic or intermittant Operation

Technical Service Bulletins

All Technical Service Bulletins:

Number	Date	Name
95131	Jul 95	A/C Evaporator Core - On Vehicle Leak Test Requirement
95121	Jun 95	Windshield - Material Usage Procedure
9594	May 95	Combination Switch - Slow to Cancel After Left Turns
9561	Mar 95	Paint - Iron Particle Removal
9562	Mar 95	Brakes - Roughness During Application
95512	Mar 95	A/C - Adding Refrigerant Oil Service Tip
9557	Mar 95	Revised EGR Valve Wiring Harness
9558	Mar 95	Engine - Hard/No Start/Fuel Shutoff Lamp Illuminated
94B46	Feb 95	Campaign - Engine Water Ingestion
9522	Jan 95	Air Conditioning - O Ring Removal Service Tip
9523	Jan 95	Electronic Fuel Gauge - Erratic Readings
9525	Jan 95	Water Pump/Pulley - Design Modification
ATRATB312	Jan 95	A/T - G4A-EL, 4EAT Engagement Problems
ATRATB294	Jan 95	A/T - Drive Axle and Wheel Lug Nut Torque Specifications
94255	Dec 94	Antitheft System - Recap of TSB's/Service Tips
94252	Dec 94	Brake Rotor - Machining Equipment/Warranty Information
94234	Nov 94	Paint - Preparation Procedure And MSDS Information
94193	Sep 94	Liftgate Shock - Will Not Support Liftgate
94B53	Sep 94	Campaign - Owners Guide Revision
94172	Aug 94	Rear View Mirror - Detaches From Windshield
94168	Aug 94	Power Door Locks/Windows - Inoperative
941610	Aug 94	Engine Valve Spring Retainer/Upper Seat - Parts Change
94161	Aug 94	Air Dam - Skirt Loose At Front Crossmember
94-14-3	Jul 94	R-12 Refrigerant - Substitutes
94B49	Jul 94	Campaign - Shifter Boot Replacement
94125	Jun 94	Power Window Switches - Obsolete Part Return
94116	Jun 94	Radio - Front Door Speakers Inoperative
9494	May 94	Steering Gear - Clunk/Knock Noise While Turning
9486	Apr 94	Door Locks - Inoperative In Below Freezing Temperatures
94B40	Apr 94	Campaign - Owner Guide Correction
9454	Mar 94	Front Door Glass - Wind Noise/Water Leaks
9443	Feb 94	Remote Keyless Entry System - Service Tips
9444	Feb 94	Fuel Pump/Bracket Assembly - Obsolete Parts Return
93B33	Feb 94	Campaign - Ignition Coil Wire Replacement
ATRATB253	Jan 94	A/T - G4AEL/4EAT DTC 60, 61, 62, or 63/Pinched Wires
ATRATB244	Jan 94	A/T - Reverse Piston Return Spring Revised
ATRATB237	Jan 94	A/T - 4EAT, G4A-EL Engine Stalls In Drive
ATRATB233	Jan 94	A/T - Low OR No Line Pressure Rise/Worn Throttle Cam
ATRATB221	Jan 94	A/T - Slipping/Vehicle Does Not Move After Rebuild
93B30	Dec 93	Campaign - Fuel Pump Inspection/Replacement
932412	Nov 93	Remote Keyless Entry System - Service Highlights
932410	Nov 93	Instrument Cluster Warning Lights - Dimly Lit
93248	Nov 93	Cooling System - New System Diagnostics
93236	Nov 93	EGO Sensors - Silicone Contamination
93235	Nov 93	Front Brakes - Grinding Noise
932314	Nov 93	Engine Gasket Surface - Cleaning Procedures
93227	Oct 93	Hydraulic Lash Adjusters - Metallic Ticking Noise
93212	Oct 93	Ashtray Cover - Falls Into Console
93211	Oct 93	Glass - Iridescence or Mottling In Tempered Glass
ATRATB191	Oct 93	A/T - Failsafe Modes
93206	Sep 93	Air Conditioning - Use of Correct Fluorescent Tracer Dye
9319B15	Sep 93	Headlamp Retractor - Schematic Revision
9319B20	Sep 93	Instrument Cluster Gauges - Test Procedure Revised
93208	Sep 93	Oil Pressure Gauge - Reads Low
9319B18	Sep 93	Fuel Tank - Removal Procedure Revision
9319B17	Sep 93	Brake Master Cylinder - Service Procedure Revision
9319B16	Sep 93	Main & Crankpin Journal - Diameter Revision
93188	Sep 93	Engine - Vibration/Resonance At Idle
93173	Aug 93	Air Bag - Lamp ON/Module Displays Code 34
ATRATB180	Aug 93	A/T - G4AEL, G4AHL, F4EAT, F4AEL Shift Feel Complaints
ATRATB170	Jun 93	A/T - G4A-EL, 4EAT Erratic Pressure Rise
93S64	Jun 93	Recall - Liftgate Strut Pivot Pin/Strut Replacement
9384	Apr 93	Exterior Clearcoat - Cracking/Eroding/Peeling Off

Technical Service Bulletins

All Technical Service Bulletins:

Number	Date	Name
NHTSA93V058000	Apr 93	Recall 93V058000: Liftgate Pivot Pin Defect
9355	Mar 93	Electronics - Diagnostic Tools & Adapter Application
9332	Feb 93	Front Door Glass - Adjustment Procedures
9324	Jan 93	`Star Tester' - Proper Hook Up Procedure
93110	Jan 93	Cooling System - Proper Fluid Concentrations
ATRATB154	Jan 93	A/T - F4EAT Diagnostic Information
92252	Dec 92	Engine - Repair Tips to Avoid Potential Damage
92243	Nov 92	MIL ON/No Codes Set Explanation
92249	Nov 92	A/T - Harsh 3rd - 2nd Gear Downshift From 40 - 55 MPH
9218B4	Sep 92	Package Tray - Service Procedures Revised
9218B1	Sep 92	Powertrain Control/Emissions Diagnosis Manual Update
ATRATB132	Sep 92	A/T - Intermittent Electrical Problems
92183	Aug 92	Rear Package Tray - Revised Service Procedure
92104	May 92	Electrical/Vacuum/Troubleshooting Manual
9244	Feb 92	EEC IV - Self Test Codes and MIL Service Tips
ATRATB078	Nov 91	A/T - How To Use A Pressure Gauge
ATRATB028	Oct 90	A/T - Engine Vacuum Testing
ATRATB9002006	Feb 90	A/T - Choosing the Right ATF
ATRATB8930	Oct 89	A/T - Math Part II
ATRATB8927	Sep 89	A/T - Twenty Steps To Successful Repairs
ATRATB8923	Aug 89	A/T - Math Formulas Part I
ATRATB8754	Sep 87	A/T - Front Bushing Wear
ATRATB8748	Aug 87	A/T - Slipping or No-Shift/Metal Sealing Rings

Vehicle: Technical Service Bulletins

How to Find Technical Service Bulletins by Category/Symptom

Selecting TSB's "By Symptom"

If you have a vehicle which displays system-related symptoms, ALLDATA provides a way to quickly search for any relevant Technical Service Bulletins (TSB's). When you select TSB's "By Symptom," all relevant TSB's display at the top of the TSB title list. Viewing TSB's by Symptom is helpful when the vehicle displays a distinct, system related, malfunction. You may also wish to review the symptom list with your customer to uncover additional information that was not indicated on the Driveability Worksheet.

You can view TSB's by Symptom at any System or Sub-System level of the TurboView hierarchy. For example, a Symptom list will appear when selecting Powertrain Management or Computers and Control Systems. Symptoms will not appear when selecting a component (such as Mass Air Flow Sensor).

To view TSB's by Symptom:

1. Select the desired System or Sub-System and click the TSB icon.
2. Select "By Symptom" from the TSB list.
3. Select the symptom you wish to display.
4. Click on the desired TSB to display the article

Example:

Your customer complains of a noise in his 1989 Toyota Corolla (1.6L DOHC). The noise seems to be coming from the automatic transmission. To find TSB's related to transmission noise:

1. Select Transmission and Drivetrain, then Automatic Transmission.
2. Click the TSB icon and select "Noise" from the TSB symptom list.
3. Notice that TSB's related to transmission noise are now located at the top of the TSB title list while non-related TSB's for the transmission are listed below.

Technical Service Bulletin # **93B30** Date: **931201**

Overview of Program 93B30

TO: All Ford Dealers December, 1993

SUBJECT:
Owner Notification Program 93B30 - Inspection and, if Necessary, Replacement of Service Fuel Pump Assemblies on Certain 1993 Probe Cars

OASIS - YES
OWNER LIST - YES
PARTS RETURN - NO
PROGRAM TIMING - Through 36/36 bumper-to-bumper warranty or through December 31, 1994, whichever provides greater coverage.

AFFECTED VEHICLES

Approximately 49 1993 Probe cars that had fuel pump assemblies replaced after August 13, 1992.

In addition, if a dealer is aware of a vehicle which received a service replacement fuel pump after August 13, 1992 but is not listed in OASIS, he should contact his district office for approval and submit the 1863 claim under this program to obtain reimbursement.

REASONS FOR THIS PROGRAM
Service replacement fuel pump assemblies, which were built without return line reverse flow check valves, may have been installed in some of these cars. The check valve is designed to prevent fuel leakage from the tank after an incident in which the return line is severed. A missing return line check valve does not affect normal operation of the vehicle.

SERVICE ACTION
To correct this condition, the fuel pump assembly is to be inspected to verify the presence of the check valve. If the check valve is missing, the fuel pump assembly will be replaced.

REFUNDS
Only for owner-paid repairs made before date of Owner Letter.

ATTACHMENTS
Attachment I

1993 Ford Probe L4-121 2.0L DOHC VIN A MFI

- Administrative Information
- Refund Codes

Attachment II
- Labor Allowances
- Parts Ordering Information

Attachment III
- Technical Information

Attachment I - Administrative Information

ATTACHMENT I
B Program

OASIS
YOU MUST USE OASIS TO DETERMINE IF A VEHICLE IS ELIGIBLE FOR THIS PROGRAM.

PLEASE NOTE
CORRECT ALL VEHICLES IN STOCK BEFORE DELIVERY

PROMPTLY CORRECT
- Affected vehicles on the enclosed list.

- Other eligible vehicles which are brought to your dealership.

DEALER-OWNER CONTACT
Immediately contact any owner whose name is not on the list. Give owner a copy of the Owner Letter. Arrange with the owner for a service date.

FCSD CONTACT
Talk with your FCSD Service Zone Manager about program concerns.

FORM 1863
Enter 1863 claims using DWE (or mail direct)

See Warranty and Policy Manual:

- Section 5.6 - 1/Section 6.1 - 24 (Owner Notification Programs)

OWNER REFUNDS

See Warranty and Policy Manual:

- Section 6.1 - Pages 25 through 26 (Owner Refund)

For owner-paid repairs made before date of Owner Letter:

- Submit on separate Form 1863 using the codes shown below:

Program Code Box	-	93B30
Causal Basic Part Number	-	9A407
Condition Code	-	79
Labor Operation (1st line)	-	REFUND
Labor Operation (2nd line)	-	ALLOW
Administrative Allowance	-	0.2 Hrs.
Customer Concern Code	-	N99

Attachment II - Labor and Parts Information

ATTACHMENT II
B Program

1993 Ford Probe L4-121 2.0L DOHC VIN A MFI

LABOR ALLOWANCES	HOURS	LABOR OPERATION
Remove, Inspect and Reinstall Existing Fuel Pump/Sender Assembly.....	1.1 Hrs.	B30A
Remove, Inspect and Install New Fuel Pump and Existing Sender Assy.....	1.1 Hrs.	B30B

(Above times include time to remove tank, drain and refill when necessary)

OWNER NOTIFICATION PROGRAM 93B30
1993 PROBE FUEL PUMP/SENDER ASSEMBLY

PARTS REQUIREMENTS

PART NUMBER	DESCRIPTION	CLASS	DEALER PRICE
F32Z-9A407-A	Fuel Pump Assy. (Contains New O-Ring Seal)	BG	$109.05
E1VZ-9417-B	O-Ring Seal	BG	$1.50

Parts will not be direct shipped for this program. Order your parts requirements through normal order processing channels.

Parts prices current until next issue of Master Price Book. For latest prices, check or call your:

- Order Processing Center
- DOES II
- Updated Price Book

CLAIMS PREPARATIONS

- Use Form 1863
- Enter using DWE (or mail)
- Use code information shown below:

Program Code	- 93B30
Causal Basic Part Number	- 9A407
Condition Code	- 79
Labor Operation	- As appropriate above
Customer Concern Code	- N99

Attachment III - Technical Instructions

ATTACHMENT III
B Program

OWNER NOTIFICATION PROGRAM 93B30
1993 PROBE FUEL PUMP/SENDER ASSEMBLY

TECHNICAL INSTRUCTIONS

1. Remove the fuel pump/sender assembly from the fuel tank. Refer to the Probe Service Manual, Section 10-01, for the procedures.

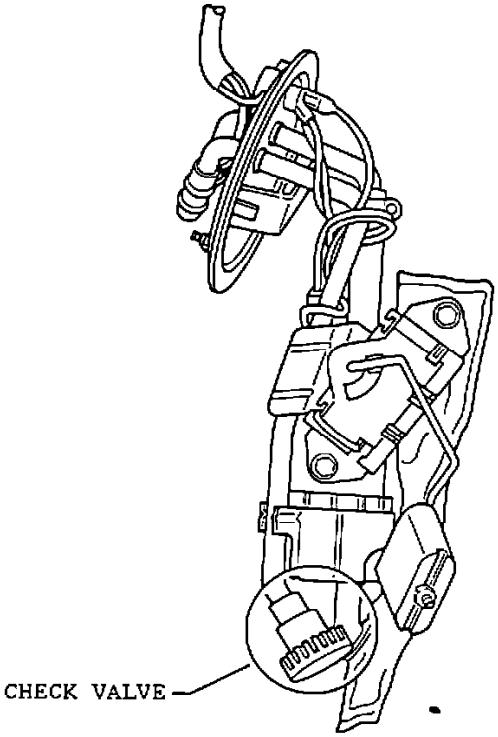

FIGURE 1

2. Inspect the fuel pump for presence of a check valve. See Figure 1.

3. If the check valve is present, the fuel pump is OK. Install a new o-ring seal and reinstall the fuel pump/sender assembly. Release the car.

4. If the check valve is missing, install a new fuel pump assembly.

NOTE:
Remove the fuel pump sender from the old fuel pump and install it on the new pump. Connect the sending unit electrical connector and torque the two retaining screws to 2.3-3.3 N-m (20-30 in.lbs.).

Owner Letter

Serial Number 1FMCA11S6XYZ12345 93B30 December, 1993

Mr. John Sample
123 Main Street
Anywhere, USA 12345

Ford Motor Company is providing a no-charge Service Program, Number 93B30, to owners of certain 1993 Probe cars.

REASON FOR THIS PROGRAM
Service replacement fuel pump assemblies, without return line reverse flow check valves, may have been installed in some of these cars. The check valve is designed to prevent fuel leakage from the tank after an incident in which the return line is severed. A missing check valve does not affect normal operation of the vehicle.

NO COST SERVICE
At no charge to you, your dealer will inspect and, if necessary, install a new fuel pump assembly on your car. This no charge service is available through the 36/36 bumper-to-bumper warranty period, or through December 31, 1994, whichever provides greater coverage.

HOW LONG WILL IT TAKE?
The time needed for this service is about one hour. However, due to service scheduling times, your dealer may need your car for one full working day.

CALL YOUR DEALER
Ask for a service date and if parts are in stock.

If your dealer does not have the parts in stock, they can be ordered before-scheduling your service date. Parts would be expected to arrive within a week.

When you bring your car in, show the dealer this letter.

If you misplace this letter, your dealer will still do the work, free of charge.

REFUNDS
If you paid to have this service done before the date of this letter, Ford is offering a full refund. For the refund, please show your paid work-order to your dealer.

CHANGED ADDRESS OR SOLD THE CAR?
Please fill out the enclosed prepaid postcard and mail it to us if you have changed your address or sold the car.

We are taking this action as part of our ongoing efforts to maintain owner confidence in our products. We hope this program will confirm your continued satisfaction in your Ford built car.Technical Service Bulletin # **95B70** Date: **951001**

Campaign - Fuel Pump/Sender Modification

95B70

OWNER NOTIFICATION PROGRAM

Fuel Pump/Sender Electrical Circuit Modification on Certain 1989 through 1995 Probe Cars

Dealer Letter

Attachment I
^ Administrative Information

Attachment II
^ Parts Ordering Information

Attachment III-A
^ Technical Instructions - 1989-1992 Non-Turbo Probe

Attachment III-B
^ Technical Instructions - 1993-1995 Probe

Customer Notification Letter

Attachment I - Administrative Information

OASIS
You must use OASIS to determine if a vehicle is eligible for this program.

Please Note
Correct all vehicles in stock before delivery.

Promptly Correct
Affected vehicles on the enclosed list.
Other eligible vehicles which are brought to your dealership.

FCSD Contact
Talk with your FCSD Parts and Service Zone Manager about program concerns.

Claims
Enter claims using DWE. See ACESII Manual, Section 5 & 6.

Owner Refunds
See ACESII Manual, Section 3-55 for submission procedures.

For owner-paid repairs made before date of the Owner Letter (or after the date of the Owner Letter if an emergency repair was made away from the selling dealer), enter using DWE.

Program Code Field - 95B70

Misc. Expense Field - REFUND

Misc. Expense Field - ADMIN

Misc. Expense Field - 0.2 Hrs.

Attachment II - Labor and Parts Information

Labor Allowances

OPERATION DESCRIPTION	HOURS	LABOR OPERATION

1993 Ford Probe L4-121 2.0L DOHC VIN A MFI

Install Fused Jumper Harness 1989 through 1992-Model Years - Kit "AA"	0.4 Hrs.	B70B
Install Fused Jumper Harness 1993 through 1995-Model Years - Kit "BB"	0.6 Hrs.	B70C

Parts Requirements
Parts will not be direct shipped for this program. Order your parts requirements through normal order processing channels.

PART NUMBER	KIT CODE	DESCRIPTION	DEALER PRICE
F4CZ-14406-A	Kit "AA"	Kit, Fuel/Pump Circuit	$16.45
F52Z-14408-AA	Kit "BB"	Harness, Fuel/Pump Circuit	$11.64

Parts prices current until next issue of Master Price Book. For latest prices, check or call your:

^ Order Processing Center
^ DOES II
^ Updated Price Book

Excess Stock Return
Excess stock returned for credit must have been purchased from Ford Parts and Service Division in accordance with Policy Procedure Bulletin 4000.

Claims Preparation
Enter using DWE.
Use code information shown below:

Program Code - 95B70

Labor Operation - See Above

See Section 5 & 6 of the ACESII manual for detailed instruction.

Attachment III-A - Tech. Instruct- 1989-92 Non-Turbo Probe

Fuel Pump/Sender Jumper Wire Modification Instructions

SERVICE PART NUMBER F4CZ-14406-A KIT CONTENTS

ENGINEERING PART NUMBER	DESCRIPTION	QUANTITY
	Jumper Harness	1
	Tie Strap	1
I.S. 8156	Instruction Sheet	1

Affected Vehicles:
1989/90/91/92 Non-Turbo engine equipped Probes.

Technical Instructions

1. Open doors. Connect Rotunda Memory Saver 014-R1064 to retain memory in radio settings, engine learn strategies, etc.

2. Open hood and disconnect battery negative cable.

3. Position both front seats forward.

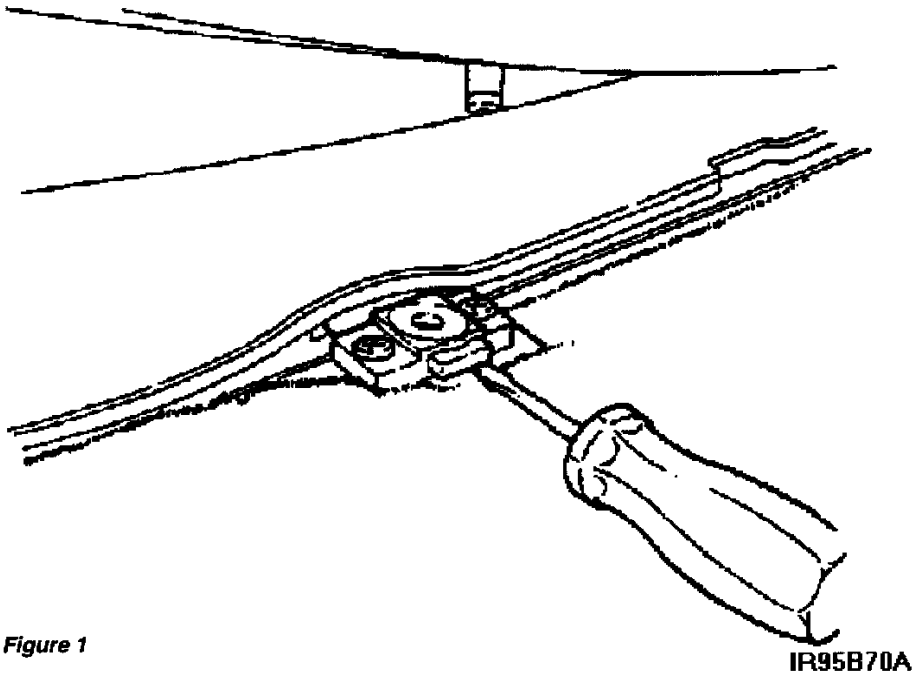

Figure 1

4. Using a screwdriver, disengage rear seat latches and remove rear seat cushion and pad from vehicle. See Figure 1.

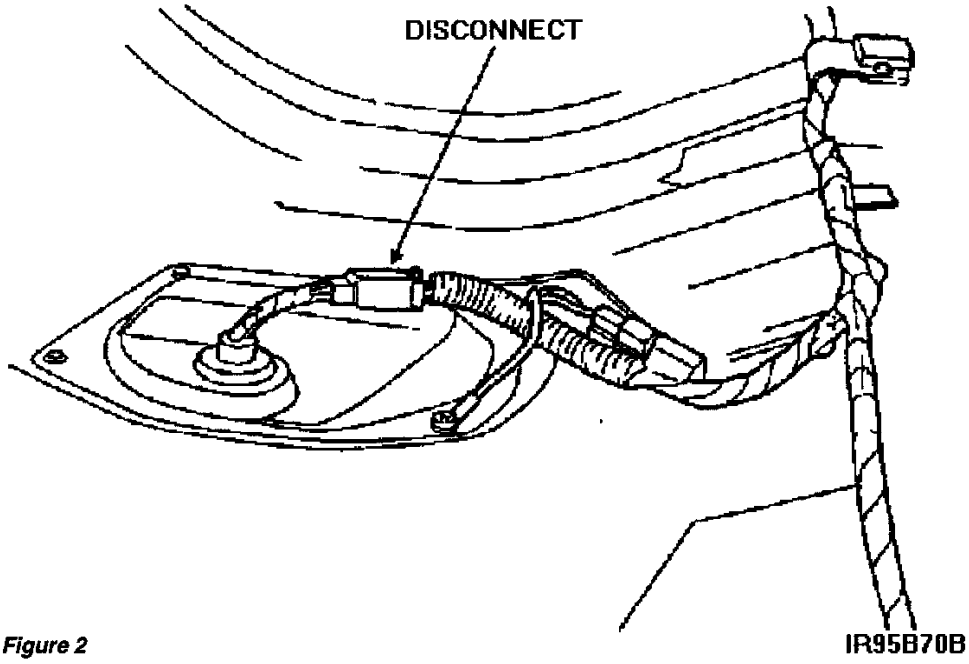

Figure 2

5. Disconnect fuel pump electrical connector. See Figure 2.

6. Connect jumper harness F4CA-14406-A to fuel pump connector and to vehicle wiring harness.

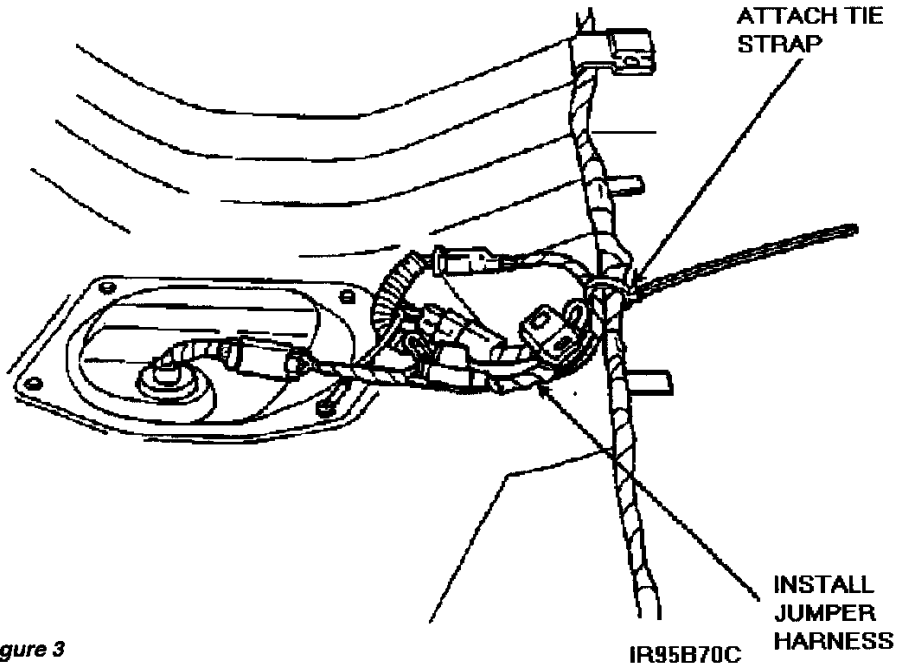

Figure 3

7. Coil and tie-strap the jumper harness to the vehicle wiring harness. See Figure 3.

8. Install pad and rear seat cushion. Ensure latches are properly engaged.

9. Connect battery negative cable and close hood.

10. Disconnect Rotunda Memory Saver.

11. Verify engine operation.

Attachment III-B - Technical Instructions - 1993-95 Probe

Fuel Pump/Sender Jumper Wire Modification Instructions

ORDER PARTS AS REQUIRED

ENGINEERING PART NUMBER	DESCRIPTION	QUANTITY
F52Z-14408-AA	Jumper Harness	1
95874-S	Tie Strap	1

Affected Vehicles:
All 1993, 1994 and 1995 Probe built through April 14, 1995

Technical Instructions

1. Connect Rotunda Memory Saver 014-R1064 to retain memory in radio settings, engine learn strategies, etc.

2. Open hood and disconnect battery negative cable.

3. Open liftgate. Fold rear seat back forward.

4. Remove cargo net and package tray, if equipped.

5. Remove cargo net fasteners, if equipped, or the two (2) upper screws holding the luggage compartment rear cover.

6. Unscrew the two (2) lower luggage compartment rear cover fasteners.

7. Remove the two (2) push pins on either side of the luggage compartment rear cover, then remove cover from vehicle.

8. Remove five (5) pushpins from around left luggage compartment side cover.

9. Remove seat belt trim and remove concealed pushpin.

10. Remove two (2) screws from luggage compartment side cover.

11. Carefully pull side cover away from body to disengage clips, disconnect compartment lamp and remove cover from vehicle.

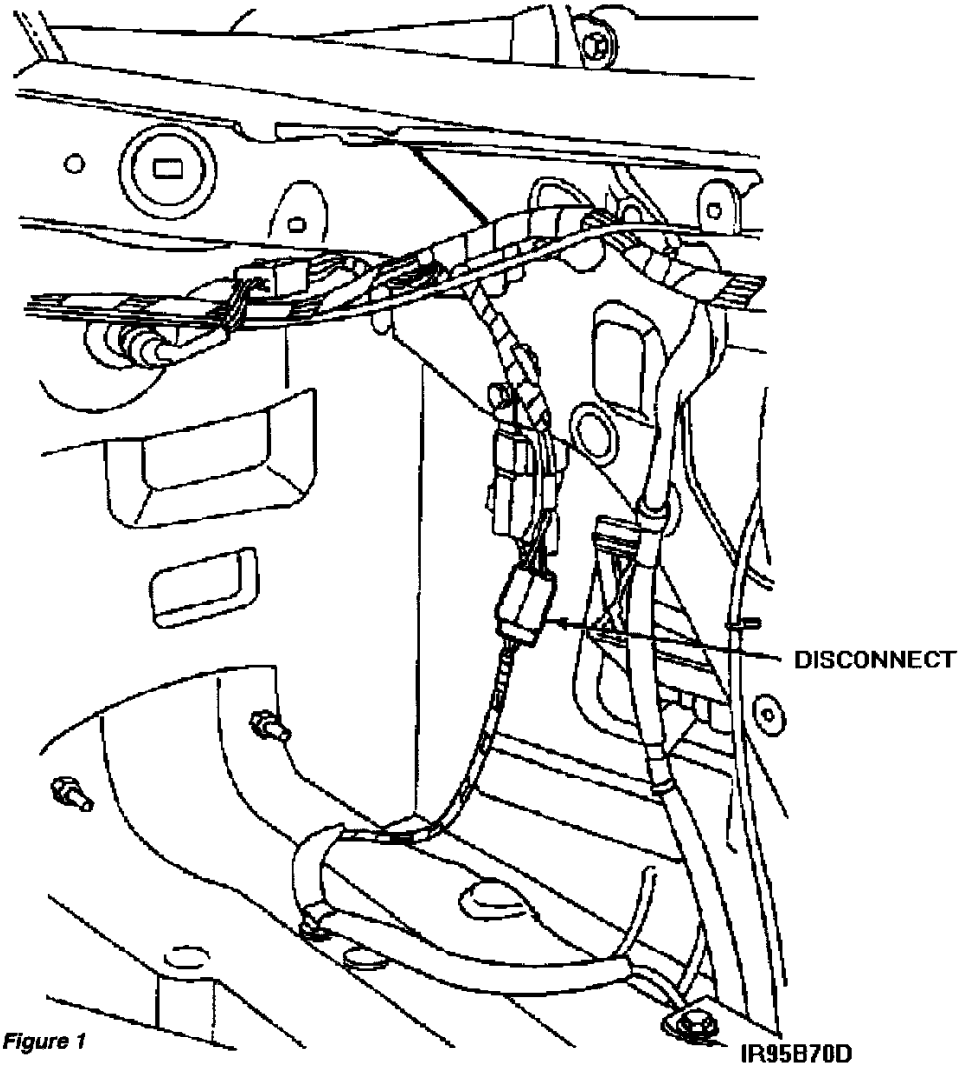

Figure 1

12. Disconnect fuel pump electrical connector. See Figure 1.

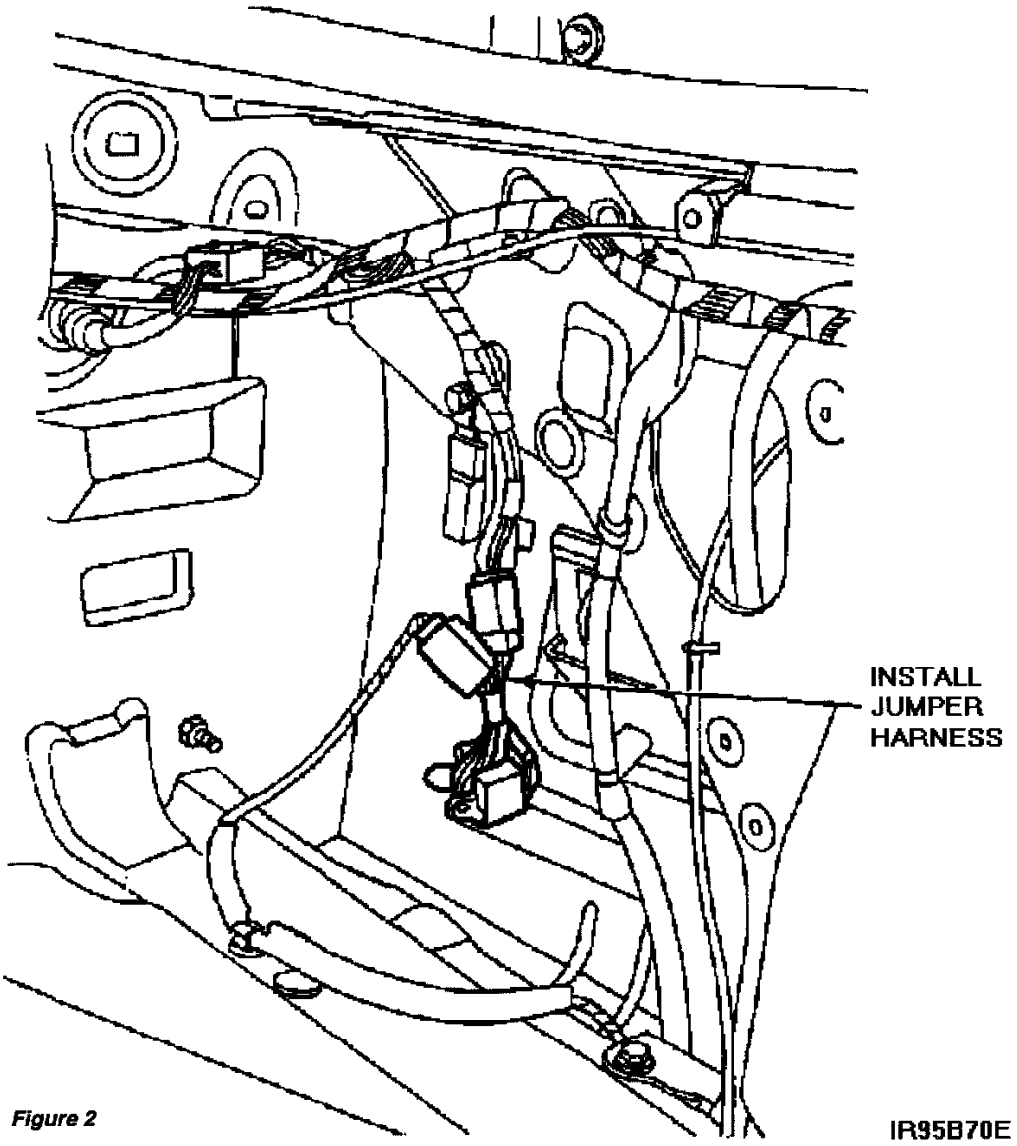

Figure 2

13. Install jumper harness, connecting it to the fuel pump and the free end to the vehicle harness. See Figure 2.

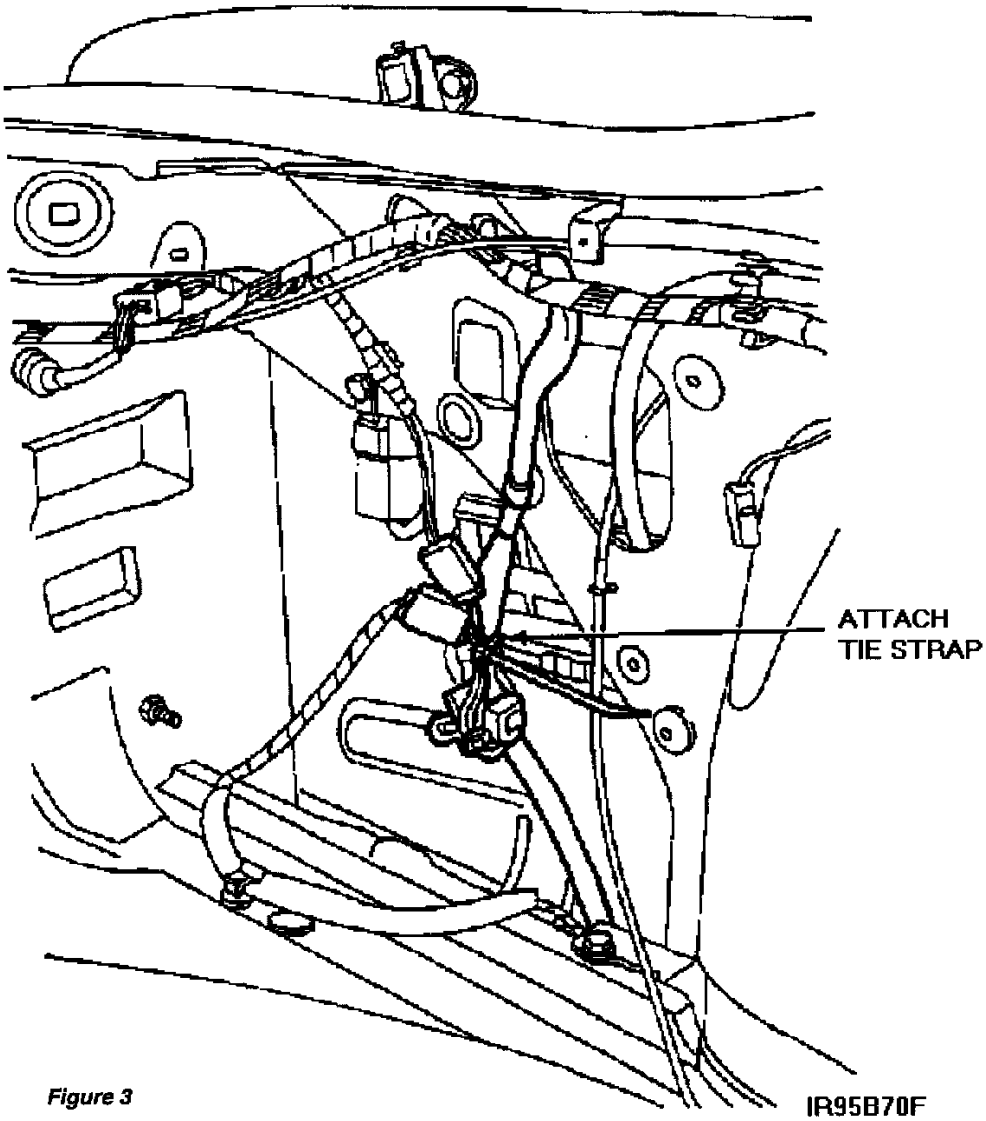

Figure 3

14. Secure jumper harness using supplied plastic tie strap. See Figure 3.

15. Install luggage compartment side cover by first connecting compartment lamp then snapping cover in place.

16. Install two (2) screws, six (6) pushpins and seat belt trim.

17. Position luggage compartment rear cover and secure using removed fasteners and pushpins.

18. Install package tray and cargo net, if equipped.

19. Connect battery negative cable, close hood then remove Memory Saver.

20. Start vehicle to verify proper fuel pump function.

Dealer Letter

To:
All Ford and Lincoln-Mercury Dealers

Subject:
Owner Notification program 95B70 - Fuel Pump/Sender Electrical Circuit Modification on Certain 1989 through 1995-Model Year Probe Cars

OASIS
YES

Owner List
YES

Parts Return
NO

1993 Ford Probe L4-121 2.0L DOHC VIN A MFI

Program Terms
There are no time/mileage limitations for this program

Affected Vehicles
1989 through 1995-model year Probe cars equipped with non-turbo charged 2.0L, 2.2L, 2.5L and 3.0L engines that were originally sold or are currently registered in Connecticut, Illinois, Indiana, Maine, Massachusetts, Michigan, New Hampshire, New York, New Jersey, Ohio, Pennsylvania, Rhode Island, Vermont and Wisconsin.

Reason For This Program
Salt water intrusion between the fuel pump/sender wiring harness connector and fuel pump/sender flange may cause electrolytic corrosion resulting in an electrical short circuit. The corrosion is the result of heavy use of calcium and sodium chloride salts for road dust and ice control in the above noted states. Should a short circuit occur, the instrument cluster gauges may act erratically, the driver may see or smell smoke inside the passenger compartment due to the wiring overheating and the fuel pump may stop operating.

Service Action
Owners of affected cars will be asked to return their cars to their dealer for installation of a fuel jumper harness in the fuel pump/sender electrical circuit. Should a short circuit occur after the jumper is installed, the jumper harness fuse for the fuel gauge will open preventing a stalled vehicle and overheating damage to the wiring harness while causing the fuel gauge to peg past full. If the driver should continue to operate the vehicle for a long period of time with an open gauge fuse, eventually the jumper harness fuse for the fuel pump will open causing the fuel pump to stop operating.

If an owner whose vehicle is not listed in OASIS believes his/her vehicle should have been included, or this condition is observed in a vehicle not covered by this action, dealers are to contact their regional office for approval and submit the claim under this program for reimbursement.

Refunds
Only for owner-paid repairs made before the date of the Owner Letter (or after the date of the Owner Letter if an emergency repair was made away from the selling dealer).

Questions?
Claims Information 1-800-423-8851
Other Recall Questions 1-800-325-5621

Attachments

Attachment I
^ Administrative Information

Attachment II
^ Labor Allowances
^ Parts Ordering Information

Attachment III-A
^ Technical Information - Kit AA

Attachment III-B
^ Technical Information - Kit BB

Owner Letter

Date, 1995

Serial Number: 12345678901234567 95B70

Mr. John Sample
123 Main Street
Anywhere, USA 12345

Ford Motor Company is providing a no-charge Service Program Number 95B70, to owners of certain 1989 through 1995 Probe cars.

Reason For This Program
We wish to install a fused jumper harness in the fuel pump electrical circuit of your car. The fused jumper harness is designed to prevent engine stalling and extensive wiring damage due to a possible fuel pump/sender wiring harness electrical short circuit.

No Charge Service. At no charge to you, your dealer will install a fused jumper harness within the fuel pump/sender electrical circuit of your car. We encourage you to have this service performed on your car as soon as possible.

How Long Will It Take?
The time needed for this service is about one hour. However, due to service scheduling times, your dealer may need your car for one full working day.

Call Your Dealer

1993 Ford Probe L4-121 2.0L DOHC VIN A MFI

Ask for a service date and if parts are in stock for Program Number 95B70.

If your dealer does not have the parts in stock, they can be ordered before scheduling your service date. Parts would be expected to arrive within a week.

When you bring your car in, show the dealer this letter.

If you misplace this letter, your dealer will still do the work, free of charge.

Refunds
If you paid to have this service done before the date of this letter, Ford is offering a full refund. For the refund, please give your paid original receipt to your Ford or Lincoln-Mercury dealer.

Changed Address or Sold the Car?
Please fill out the enclosed prepaid postcard and mail it to us if you have changed your address or sold the car.

We are taking this action as part of our ongoing efforts to maintain owner confidence in our products.

We hope this program will confirm your continued satisfaction in your Ford built car.Technical Service Bulletin # **93B33** Date: **940201**

Overview of Recall 93B33

TO: All Ford Dealers February, 1994

SUBJECT:
Owner Notification Program 93B33 - Certain 1993 Model Year Ford Probes - Replacement of Ignition Coil Wire.

OASIS - Yes
OWNER LIST - Yes
PARTS RETURN - No
PROGRAM TIMING - Affected vehicles are eligible for this program through March 31, 1995, regardless of mileage. (After March 31, 1995, a vehicle is still eligible for this program if it is within the 36 month / 36,000 mile Bumper-to-Bumper warranty).

AFFECTED VEHICLES
Certain 1993 Model Year Ford Probes equipped with 2.0L engines and manual transmissions, produced from April 16, 1992, through February 15, 1993.

REASONS FOR THIS PROGRAM
The ignition coil wire on these vehicles is too short. This condition may cause coil wire damage during engine roll, and possibly cause the ignition coil terminal to fracture. If damage to the ignition coil wire or ignition coil occurs, the vehicle may experience engine stumble, hesitation, rough idle, or engine stall.

SERVICE ACTION
To correct this condition a longer ignition coil wire will be installed. Also, the ignition coil will be visually inspected and, if necessary, replaced.

REFUNDS
Only for owner-paid repairs made before date of Owner Letter.

ATTACHMENTS
Attachment I
- Administrative Information
- Refund Codes

Attachment II
- Labor Allowances
- Parts Ordering Information

Attachment III
- Technical Information

Attachment I - Administrative Information

OASIS
YOU MUST USE OASIS TO DETERMINE IF A VEHICLE IS ELIGIBLE FOR THIS PROGRAM.

PLEASE NOTE
CORRECT ALL VEHICLES IN STOCK BEFORE DELIVERY

PROMPTLY CORRECT
- Affected vehicles on the enclosed list.

- Other eligible vehicles which are brought to your dealership.

DEALER-OWNER CONTACT
Immediately contact any owner whose name is not on the list. Give owner a copy of the Owner Letter. Arrange with the owner for a service date.

FCSD CONTACT
Talk with your FCSD Service Zone Manager about program concerns.

FORM 1863
Enter 1863 claims using DWE (or mail direct)

See Warranty and Policy Manual:

- Section 5.6 - 1/Section 6.1 - 24 (Owner Notification Programs)

OWNER REFUNDS
See Warranty and Policy Manual:

- Section 6.1 - Pages 25 through 26 (Owner Refund)

For owner-paid repairs made before date of Owner Letter:

Submit on separate Form 1863 using the codes shown below:

Program Code Box	- 93B33
Causal Basic Part Number	- 12298
Condition Code	- 08
Labor Operation (1st line)	- REFUND
Labor Operation (2nd line)	- ALLOW
Administrative Allowance	- 0.2 Hrs.
Customer Concern Code	- N99

Attachment II - Labor and Parts Information

LABOR ALLOWANCES	HOURS	LABOR OPERATION
Replace Ignition Coil Wire (Includes Inspection of Coil)	0.2 Hrs.	B33A
Replace Ignition Coil and Coil Wire (Includes Inspection of Coil)	0.4 Hrs.	B33B

PARTS REQUIREMENTS

PART NUMBER	DESCRIPTION	CLASS	DEALER PRICE
F32Z-12298-B	Ignition Coil Wire	CG	$10.66
F32Z-12297-K	Separator (Slip Ring)	AG	$2.50
E73Z-12029-A	Coil Assembly (if required)	BG	$23.92

Parts will not be direct shipped for this program. Order your parts requirements through normal order processing channels.

Parts prices current until next issue of Master Price Book. For latest prices, check or call your:

- Order Processing Center
- DOES II
- Updated Price Book

CLAIMS PREPARATIONS

- Use Form 1863
- Enter using DWE (or mail)
- Use code information shown below:

Program Code	- 93B33
Causal Basic Part Number	- 12298

Condition Code	- 08
Labor Operation	- As Appropriate Above
Customer Concern Code	- N99

Attachment III - Technical Instructions

REMOVAL
Remove ignition coil wire. Be sure to note the location where the attaching clip fastens the coil wire to the air cleaner.

INSTALLATION
Insert the coil wire through the slip ring. Install coil wire and attach slip ring to the air cleaner at the location noted above.

NOTE:
IF THROUGH VISUAL INSPECTION OF THE IGNITION COIL, DAMAGE IS FOUND, REPLACE THE IGNITION COIL. REFER TO THE 1993 MODEL YEAR FORD PROBE SHOP MANUAL, SECTION 03-07, FOR THE IGNITION COIL REPLACEMENT PROCEDURE.

Owner Letter

Serial Number 12345678901234567 February, 1994

Mr. John Sample
123 Main Street
Anywhere, USA 12345

Ford Motor Company is providing a no-charge Service Program, Number 93B33, to owners of certain 1993 model year Ford Probes equipped with 2.0L engines and manual transmissions.

REASON FOR THIS PROGRAM
The ignition coil wire on these vehicles may be too short. This condition may cause coil wire damage during engine roll, and possibly cause the ignition coil terminal to fracture. If damage to the ignition coil wire or ignition coil occurs, your vehicle may experience engine stumble, hesitation, rough idle, or engine stall.

NO CHARGE SERVICE
At no charge to you, your dealer will replace your ignition coil wire. Your dealer will also inspect your ignition coil and, if necessary replace it.

Affected vehicles are eligible for this program through March 31, 1995, regardless of mileage. (After March 31, 1995, a vehicle is still eligible for this program if it is within the 36 month / 36,000 mile Bumper-to-Bumper warranty).

HOW LONG WILL IT TAKE?
The time needed for this service is about one (1) hour. However, due to service scheduling times, your dealer may need your car for one full working day.

CALL YOUR DEALER
Ask for a service date and if parts are in stock.

If your dealer does not have the parts in stock, they can be ordered before scheduling your service date. Parts would be expected to arrive within a week.

When you bring your car in, give the dealer this letter. If you misplace this letter, your dealer will still do the work, free of charge.

REFUNDS
If you paid to have this service done before the date of this letter, Ford is offering a full refund. For the refund, please show your paid work-order to your Ford dealer.

CHANGED ADDRESS OR SOLD THE CAR?
Please fill out the enclosed prepaid postcard and mail it to us if you have changed your address or sold the car.

We are taking this action as part of our ongoing efforts to maintain owner confidence in our products. We hope this program will confirm your continued satisfaction in your Ford built car.

Technical Service Bulletin # **94B46** Date: **950201**

Overview of Program 94B46

OWNER NOTIFICATION PROGRAM
94B46

Certain 1993/1994 Model Year Ford Probes - Water Ingestion

Dealer Letter

1993 Ford Probe L4-121 2.0L DOHC VIN A MFI

Attachment I

^ Administrative Information
^ Refund Codes

Attachment II

^ Labor Allowance
^ Parts Requirements
^ Claims Preparations

Attachment III

^ Technical Instructions

Customer Notification Letter

Dealer Letter

February, 1995

To: All Ford Dealers

Subject:

Owner Notification Program 94B46 - Certain 1993/1994 Model Year Ford Probes - Water Ingestion.

OASIS
Yes

Owner List
Yes

Parts Return
No

Program Timing

Affected cars are eligible for this program through December 31, 1995 regardless of mileage. (After December 31, 1995 a car is still eligible for this program if it is within the 36 month/36,000 mile Bumper-to-Bumper warranty).

Affected Vehicles

* All 1993 and 1994 Model Year Base Ford Probe Cars equipped with 2.0L engines, and produced from April 16, 1992 through January 3, 1994, (the SE 2.0L model is not affected).

* All 1993 Ford Probe GT Cars equipped with 2.5L engines, and produced from April 16, 1992 thorough December 8, 1992.

Reason For This Program

The fresh air intake duct on some of these vehicles does not provide adequate sealing to prevent water from being ingested into the engine. If significant water enters the engine, such as when driving through deep standing water, the internal components may be damaged, rendering the vehicle inoperative.

Service Action

To prevent water from being ingested into the engine, the fresh air intake duct on the affected vehicles will have a seal kit installed.

Refunds

Only for owner-paid repairs made before the date of the Owner Letter or after the date of the Owner Letter if an emergency repair was made away from the selling dealer.

Attachments

Attachment I
^ Administrative Information

^ Refund Codes

Attachment II

^ Labor Allowances
^ Parts Ordering Information

Attachment III

^ Technical Information

Attachment I - Administrative Information

OASIS

You must us OASIS to determine if a vehicle is eligible for this program.

Please Note
Correct all vehicles in stock before delivery.

Promptly Correct

^ Affected vehicles on the enclosed list.

^ Other eligible vehicles which are brought to your dealership.

Dealer-Owner Contact

Immediately contact any owner whose name is not on the list. Give owner a copy of the Owner Letter. Arrange with the owner for a service date.

FCSD Contact

Talk with your FCSD Parts and service Zone Manager about program concerns.

Claims

For dealers not on ACESII:

Enter 1863 claims using DWE.

See Warranty and Policy Manual: Section 5.6 - 1/Section 6.1 - 24 (Owner Notification Programs)

For dealers on ACESII:

Enter claim using DWE

See ACESII Manual, Section 5 & 6.

Owner Refunds For Dealers Not on ACESII

See Warranty and Policy Manual: Section 6.1 - Pages 25 through 26 (Owner Refund)

For owner-paid repairs made before date of Owner Letter: submit on separate Form 1863 using the codes shown below:

Program Code Field	94B46
Causal Basic Part Number	17756
Condition Code	79
Labor Operation (1st line)	REFUND
Labor Operation (2nd line)	ALLOW
Administrative Allowance	0.2 Hrs.
Customer Concern Code	N99

Owner Refunds For Dealers On ACESII

For Owner-paid repairs made before date of Owner Letter:

Enter using DWE.

Program Code Field	94B46

1993 Ford Probe L4-121 2.0L DOHC VIN A MFI

Misc. Expense Field	REFUND
Misc. Expense Field	ADMIN
Misc. Expense Field	0.2 Hrs.

Attachment II - Labor, Parts and Claim Information

Probe - Water Ingestion

Labor Allowance

OPERATION DESCRIPTION	HOURS	LABOR OPERATION
Install Seal Kit	0.5 Hrs.	B46B

Parts Requirements

Parts will not be direct shipped fro this program. Order your parts requirements through normal order processing channels.

PART NUMBER	DESCRIPTION	DEALER PRICE
F42Z-17756-A	Seal Kit	$10.00

Parts prices current until next issue of Master Price Book. For latest prices, check or call your:

^ Order Processing Center

^ DOES II

^ Updated Price Book

Claims Preparation For Dealers Not On ACESII

^ Use From 1863

^ Enter using DWE (or mail)

^ Use code information shown below:

Program Code	94B4E
Causal Basic Part Number	17756
Condition Code	79
Labor Operation	B46B
Customer Concern Code	N99

Claims Preparation For Dealers On ACESII

^ Enter using DWE

^ Use code information shown below:

Program Code	94B4E
Labor Operation	See Above

^ See section 5 and 6 of ACESII Manual for detailed instructions.

Attachment III - Technical Instructions

Water Ingestion Service Kit
Installation Instructions For 1993 & 1994 Probe

Technical Instructions

NOTE:
Included in the following instructions are three (3) separate procedures, depending on which model Probe is being serviced. Verify the production date and install the service kit according to these installation instructions.

MODEL - PROD.DATE	4-16-92 thru 12-8-92	12-9-92 thru 1-3-94
BASE	PROCEDURE A	PROCEDURE B

GT PROCEDURE C

Service Kit Part Number F42Z 17756A

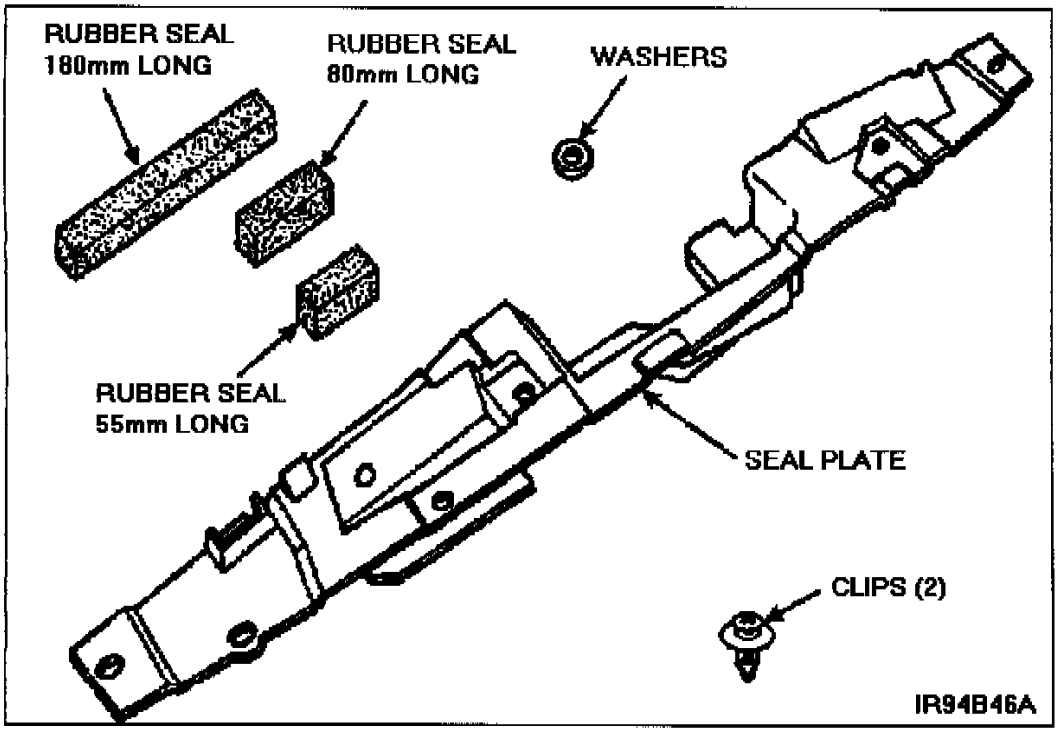

The service kit contains the items as shown.

Procedure A

1. Open the hood.

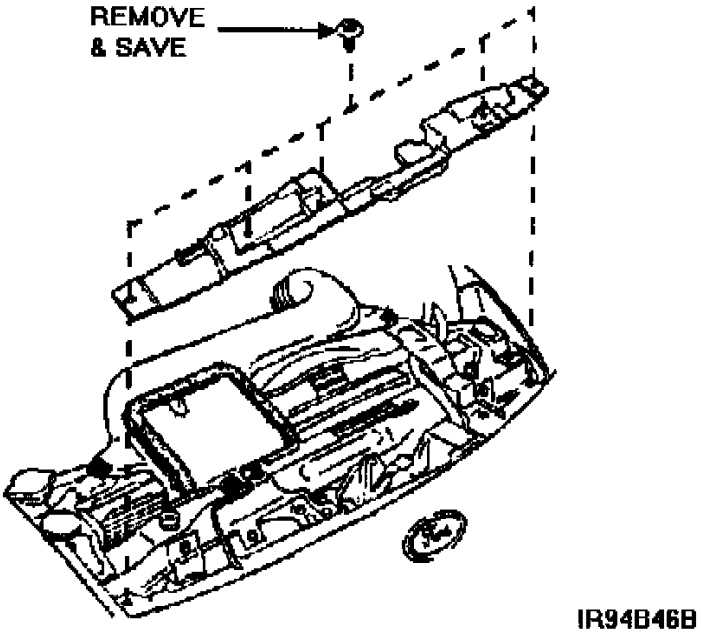

2. Remove the seal plate from the vehicle and discard. Save the five (5) attaching clips.

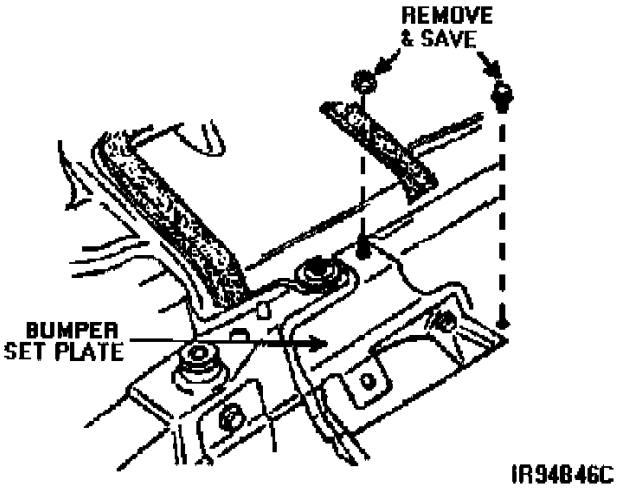

3. Remove one (1) bolt and one (1) nut that secures bumper set plate and save.

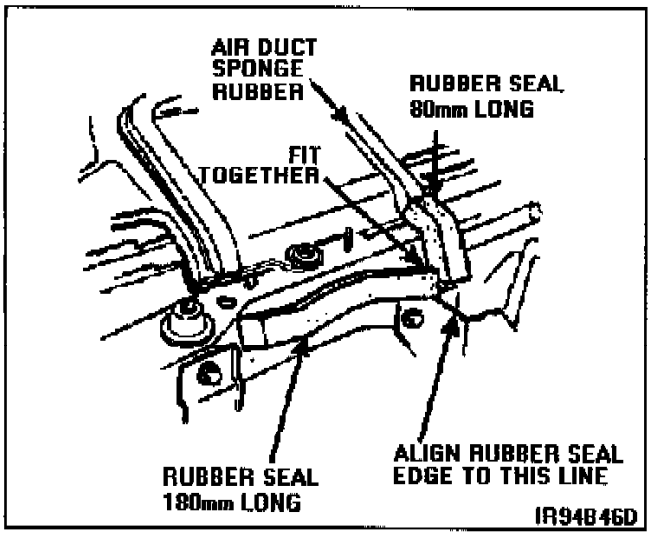

4. Slightly pry up the bumper set plate. Clean the shroud upper plate in areas where rubber seal is to be applied. Affix the rubber seal (180 mm long) along the shroud upper plate crease behind the bumper set plate.

5. Affix the rubber seal (80 mm long) to the end of the air duct sponge rubber, and ensure that all rubber seals fit together.

6. Reinstall the bumper set plate nut and bolt.

7. Temporarily install the new seal plate by using two clips saved in step 2. Drill two (2) 11/32" holes where indicated. Remove the new seal plate. Clean off metal shavings and apply Ford Super Seal Compound # F3AZ-19515-SA (or equivalent) to holes.

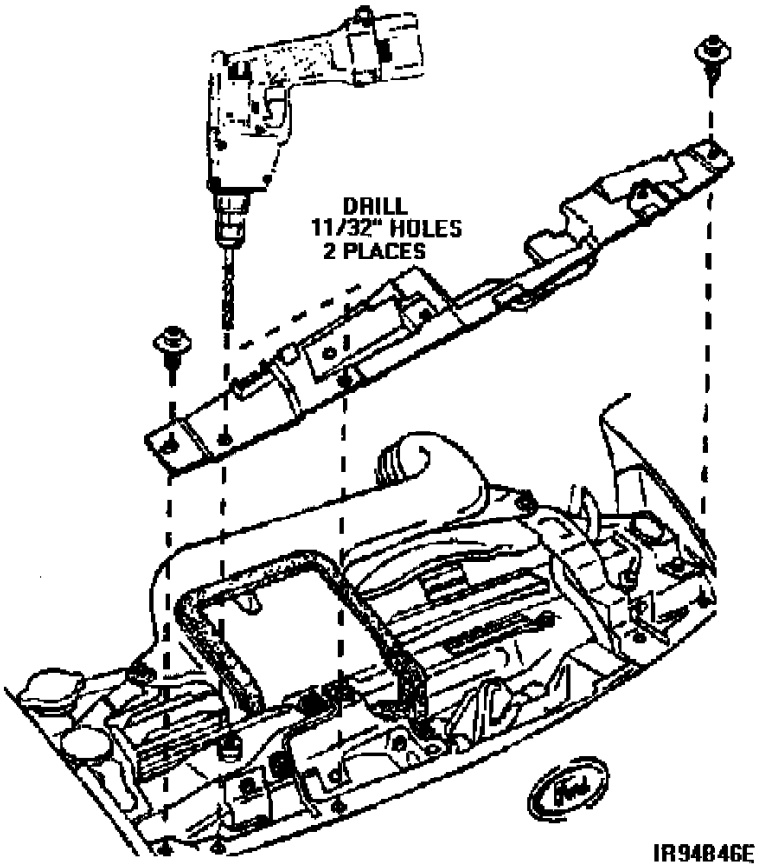

8. Fasten the new seal plate with the five (5) original clips, three (3) new washers and two (2) additional clips as shown. Make certain that you install three (3) washers in the proper position as indicated.

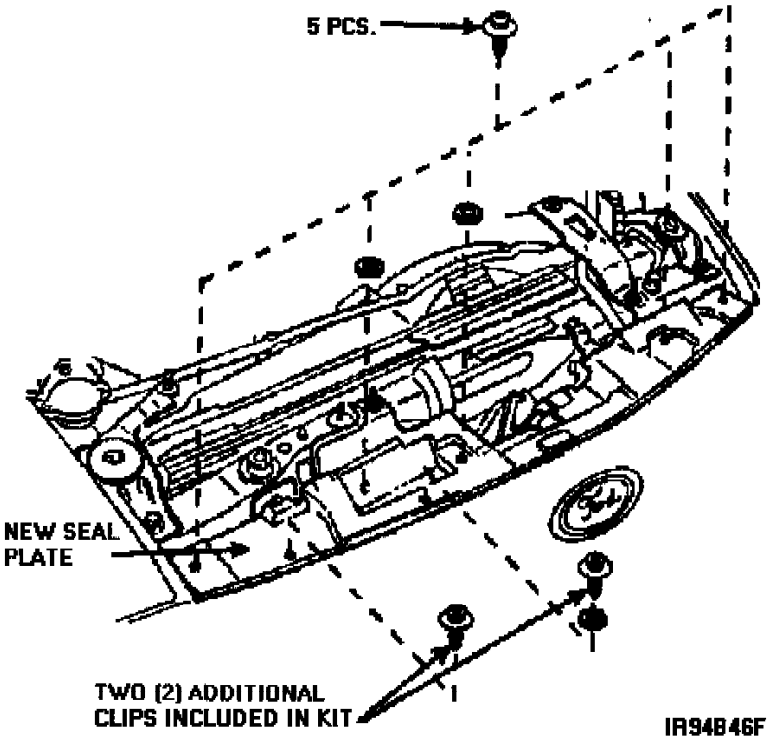

9. Remove the air intake duct and locate the rubber seal at the bottom of air duct. Trim the rubber seal material parallel with the seal backing (steel) plate. Reinstall the air duct.

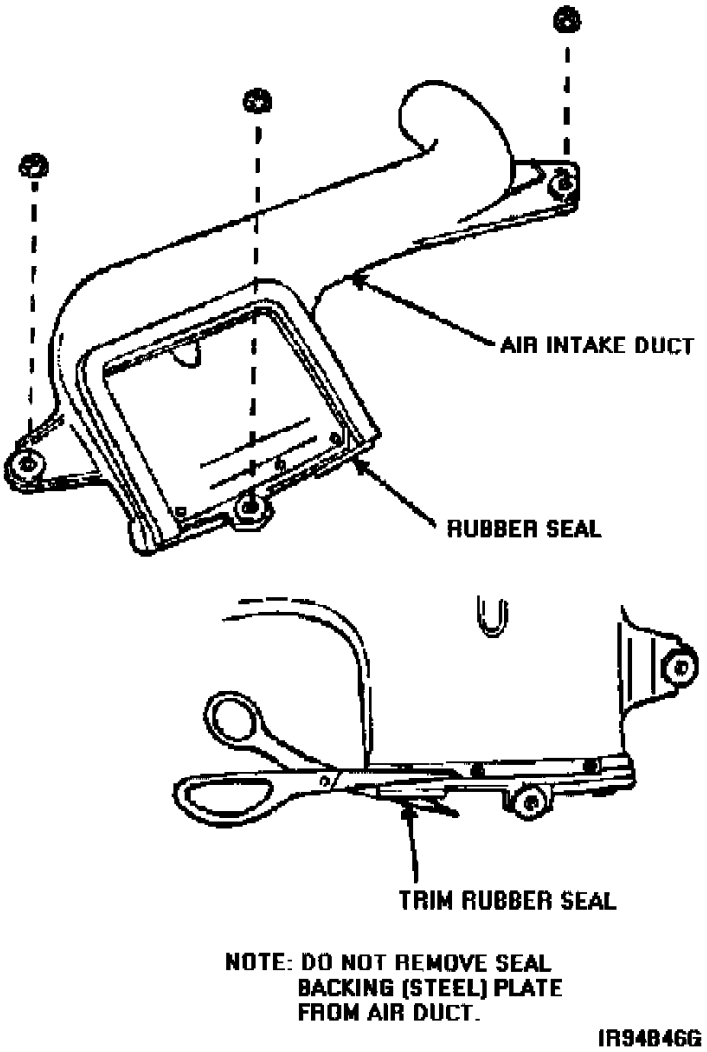

10. Wipe off the area next to the hood striker. Affix the rubber seal (55 mm long) to the area as shown.

Procedure B

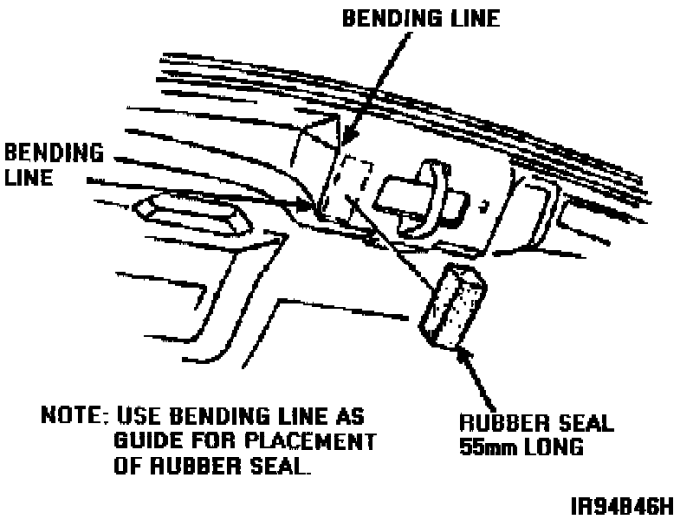

1. Open the hood.

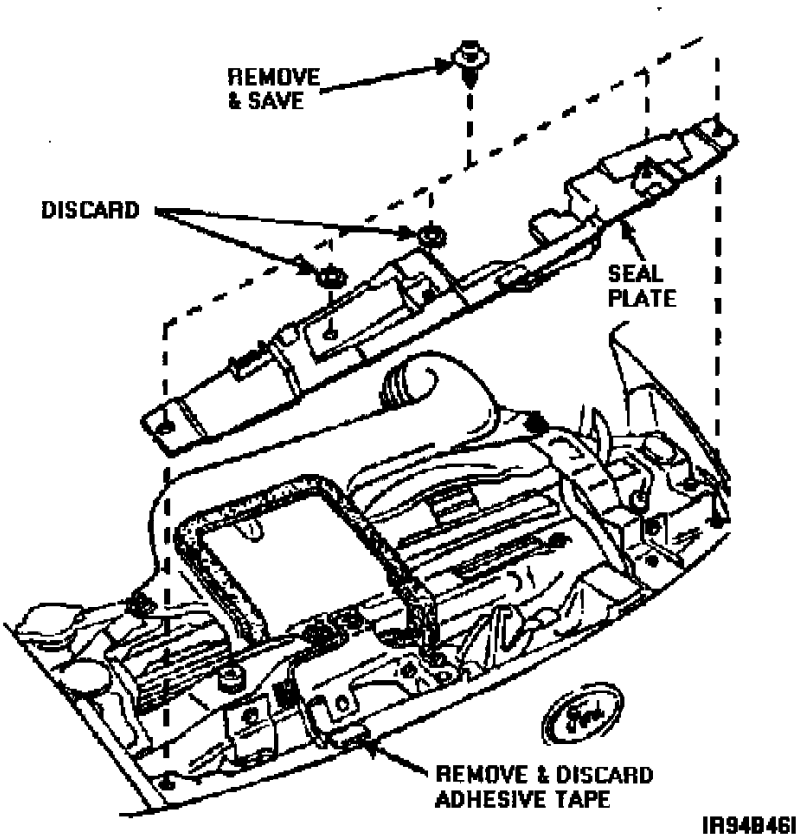

2. Remove the seal plate from the vehicle and discard. Save the five (5) attaching clips. Discard two (2) washers

NOTE:
Vehicles produced during 9-1-93 thru 1-3-94 have adhesive tape between the seal plate and bumper. This adhesive tape should be removed.

NOTE:
Make certain that the following three (3) rubber seals are already installed on the vehicle:

^ 180 mm rubber seal located underneath bumper set plate.

^ 70 mm rubber seal in front of air duct.

^ 55 mm rubber seal next to the hood striker.

If either 180 mm or 70 mm rubber seal is not installed, install it by referring to Procedure A, Step 10.

If 55 mm rubber seal is not installed, install it by referring to Procedure A, Step 10.

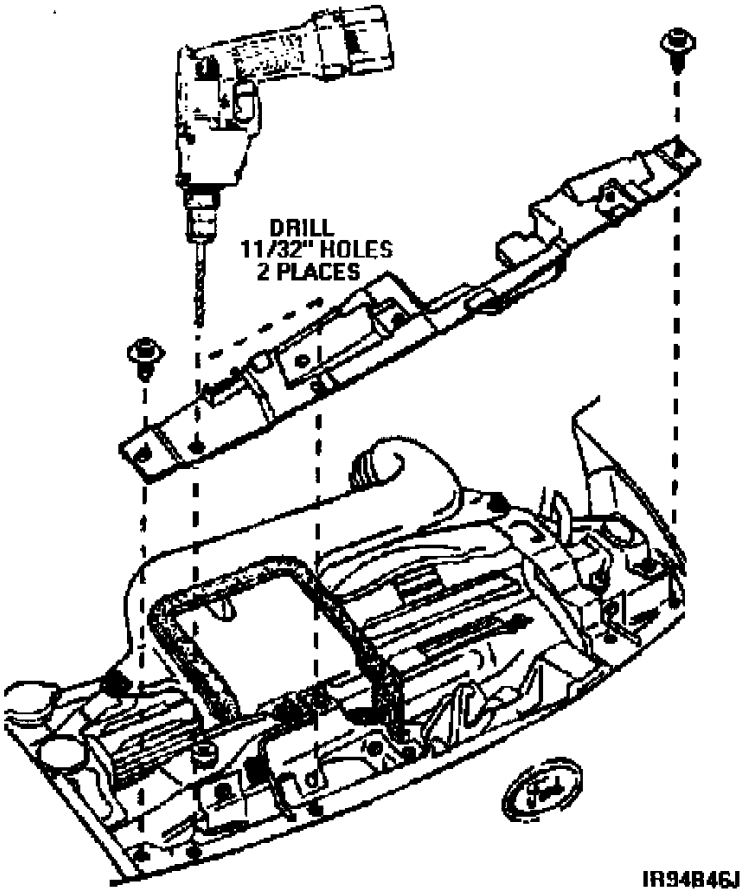

3. Temporarily place the new seal plate by using two (2) clips retained in step 2. Using the new seal plate as a pattern, drill two (2) 11/32" holes where indicated. Remove the new seal plate. Clean off metal shavings and apply Ford Super Seal Compound # F3AZ-1 951 5-SA (or equivalent) to holes.

4. Fasten the new seal plate with the five (5) original clips, three (3) new washers and two (2) additional clips as shown. Make certain that you install three (3) washers in the proper position as indicated.

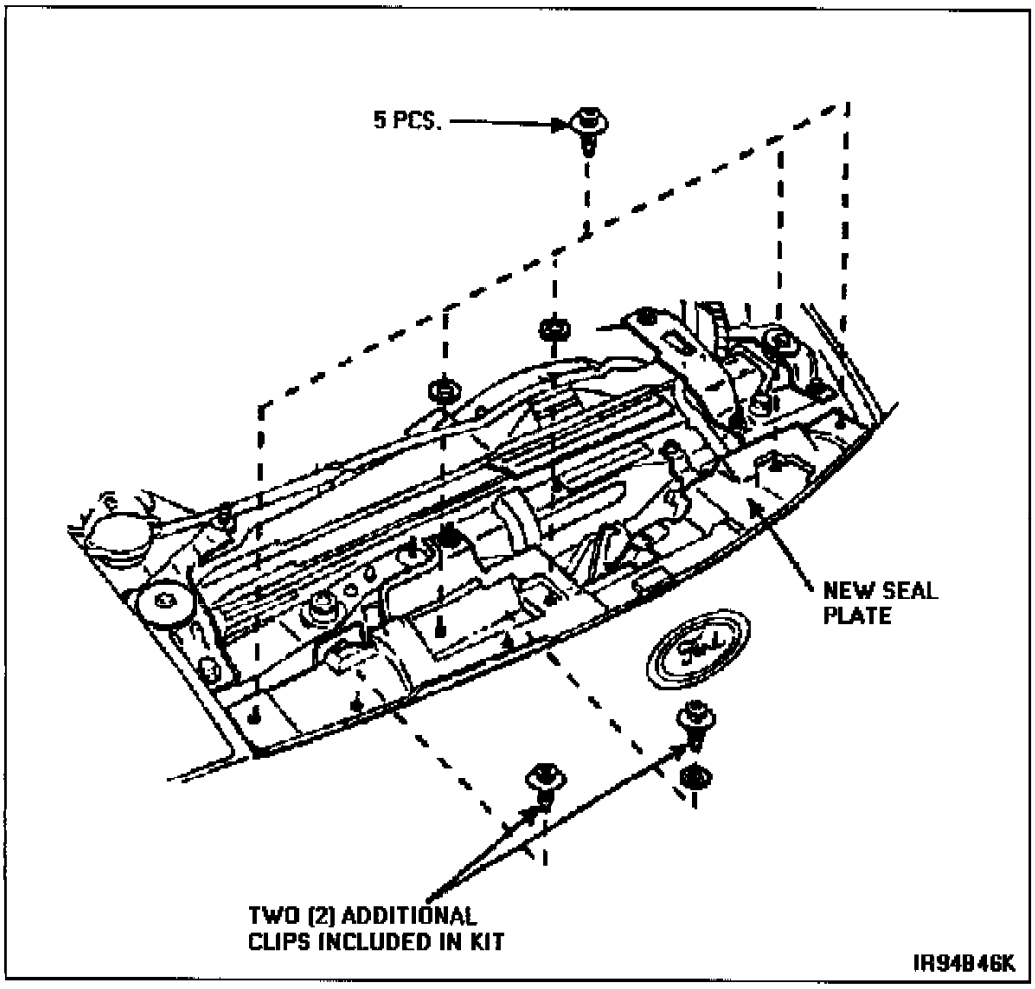

5. Discard three (3) rubber seals included in the kit, unless needed in Step 2.

Procedure C

1. Open the hood.

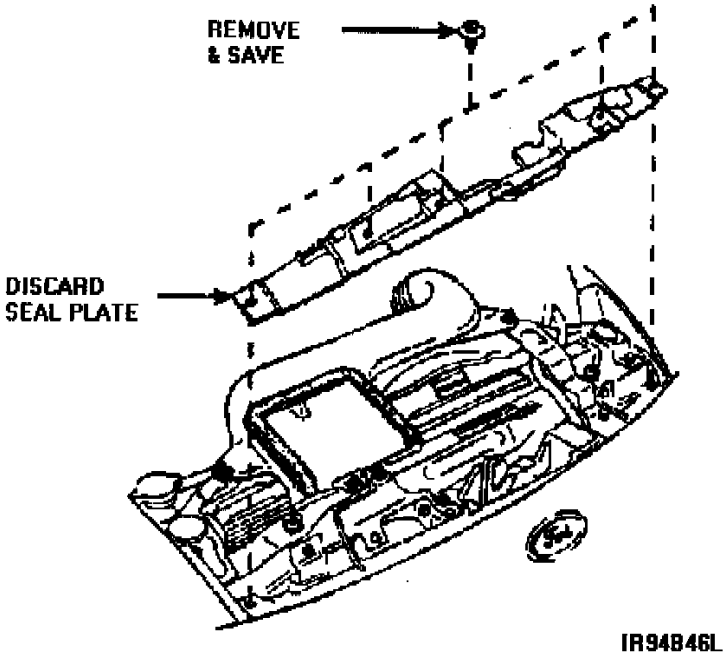

2. Remove the seal plate from the vehicle and discard. Save the five (5) attaching clips.

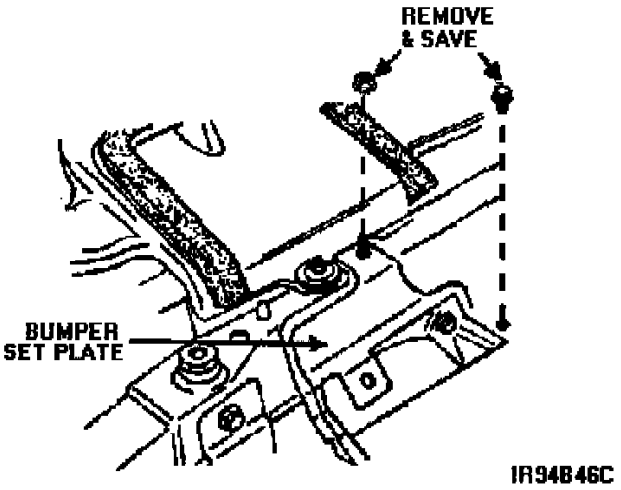

3. Remove one (1) bolt and one (1) nut that secures bumper set plate and save.

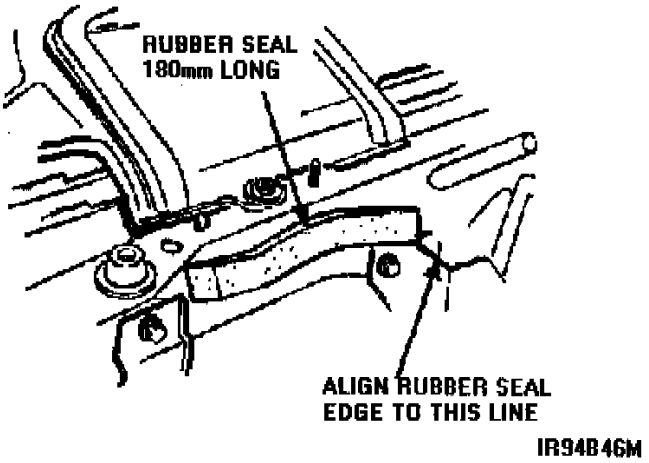

4. Slightly pry up the bumper set plate. Clean the shroud upper plate. Affix the rubber seal (180 mm long) along the shroud upper plate crease as indicated.

Discard 80 mm and 55 mm long rubber seals included in the service kit.

5. Reinstall the bumper set plate nut and bolt.

6. Fasten new seal plate by using five (5) original clips and two (2) washers as shown. Make certain that you install two (2) washers in the proper positions as indicated.

1993 Ford Probe L4-121 2.0L DOHC VIN A MFI

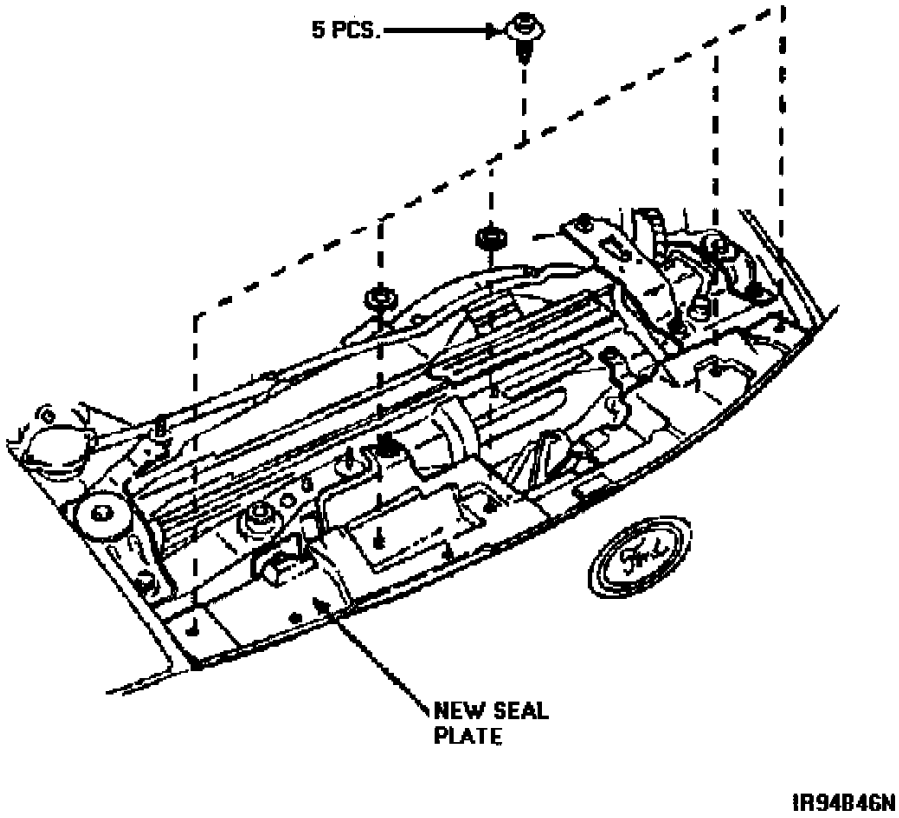

7. Discard one (1) washer, two (2) clips and two (2) rubber seals included in kit.

Owner Letter

Date, here

Serial Number: 12346578901234657 94B46

Mr. John sample
123 Main Street
Anywhere, USA 12345

Ford Motor Company is providing a no-charge Service Program, Number 94B46, to owners of certain 1993/1994 Model Year Ford Probes.

Reason For This Program

The fresh air intake duct on your car does not provide adequate sealing to prevent water from being ingested into the engine. If significant water enters the engine, such as when driving through deep standing water, the internal engine components may be damaged, rendering the vehicle inoperative.

No Charge Service

To prevent this from happening, and at no charge to you, your dealer will install a seal kit on your car.

Your car is eligible for this program through December 31, 1995 regardless or mileage. (After December 31, 1995 your car is still eligible for this program if it is within the 36 month/36,000 mile Bumper-to-Bumper warranty).

How Long Will It Take?

The time needed for this service is about one hour. However, due to service scheduling times, your dealer may need your car for one full working day.

Call Your Dealer

Ask for a service date and if parts are in stock.

It your dealer does not have the parts in stock, they can be ordered before scheduling your service date. Parts would be expected to arrive within a week.

When you bring your car in, show the dealer this letter.

If you misplace this letter, your dealer will still do the work, free of charge.

Refunds

If you paid to have this service done before the date of this letter, Ford is offering a full refund. For the refund, please give your paid original receipt to your Ford dealer.

Changed Address or Sold the Car?

Please fill out the enclosed prepaid postcard and mail it to us if you have changed your address or sold the car.

We are taking this action as part of our ongoing efforts to maintain owner confidence in our products. We hope this program will confirm our commitment to your continued satisfaction in your Ford Probe.Technical Service Bulletin # **94B40** Date: **940401**

Overview of Program 94B40

TO: All Ford Dealers April, 1994

SUBJECT:
Owner Notification Program 94B40 - Certain 1993 Model Year Probe Cars - Owner Guide Correction

OASIS - NO
OWNER LIST - YES

AFFECTED VEHICLES

Certain 1993 Model Year Ford Probe cars built from Job # 1 through July 23, 1992, are affected by this program.

REASONS FOR THIS PROGRAM

The Owner Guide furnished with some 1993 Probe cars does not describe the proper method for reattaching the car's luggage compartment cover after removal. If the cover is not properly retained, it would be free to move and could cause injury to rear seat passengers during a sudden stop or accident.

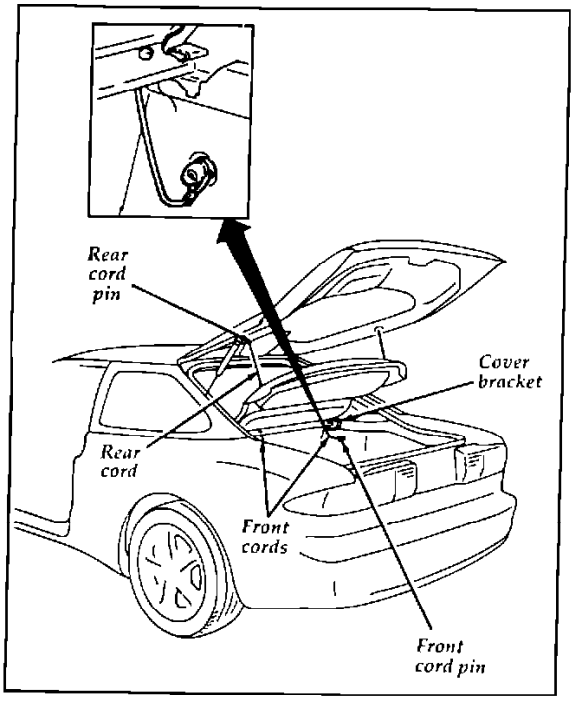

The luggage compartment and cover

Warning: The cover may cause injury in a sudden stop or accident if it is left lying loose in the vehicle or if it is not securely installed. Therefore, the cover should either be securely installed or removed from the vehicle. To be securely installed, the cover must be attached to the brackets and all four cords must be fastened.

127

SERVICE ACTION

To correct this condition, owners of the affected cars will be mailed a correction sticker page and asked to affix it to page 127 of their Owner Guide. Owners may also return to their dealer to have the corrected sticker page affixed.

ATTACHMENTS

Attachment I
- Administrative Information

Attachment II
- Labor Allowances

Attachment I - Administrative Information

OASIS
This program will NOT appear in OASIS.

PLEASE NOTE
CORRECT ALL VEHICLES IN STOCK BEFORE DELIVERY

PROMPTLY CORRECT

- Affected vehicles on the enclosed list.

- Other eligible vehicles which are brought to your dealership.

DEALER-OWNER CONTACT
Immediately contact any owner whose name is not on the list. Give owner a copy of the Owner Letter. Arrange with the owner for a service date.

FCSD CONTACT
Talk with your FCSD Service Zone Manager about program concerns.

FORM 1863
Enter 1863 claims using DWE

See Warranty and Policy Manual:

- Section 5.6 - I/Section 6.1 - 24 (Owner Notification Programs)

Attachment II - Labor and Parts Information

OWNER NOTIFICATION PROGRAM 94B40
1993 PROBE OWNER GUIDE CORRECTION

LABOR ALLOWANCES	HOURS	LABOR OPERATION
Affix Corrected Sticker to Page 127 of Owner Guide.....	0.2 Hrs.	B40B

PARTS REQUIREMENTS

NONE
Owners will be mailed a correction sticker page to be affixed on page 127 of their car's Owner Guide. Owners may also return to their dealer to have the corrected sticker page affixed. Refer to the following for labor allowance and claim processing information.

NOTE:
If additional sticker pages are required, they may be obtained at no charge by calling Renkim Corporation on 1-800-352-5621.

CLAIMS PREPARATIONS

- Use Form 1863
- Enter using DWE
- Use code information shown below:

Program Code	- 94B40
Causal Basic Part Number	- MISC
Condition Code	- 08
Labor Operation	- B40B
Customer Concern Code	- N99

Owner Letter

Serial Number 12345678901234567 May, 1994

Mr. John Sample
123 Main Street
Anywhere, USA 12345

REASON FOR THIS LETTER

The Owner Guide included with your 1993 Probe does not describe the proper method for reattaching the car's luggage compartment cover after removal. If the cover is not properly retained, it would be free to move and could cause injury to rear seat passengers during a sudden stop or accident.

NEW PAGE PROVIDED WITH THIS LETTER

In order to provide the information necessary to properly secure the luggage compartment cover, we have enclosed a new Owner Guide sticker page with this letter. Please affix this new sticker page over the existing page in your car's Owner Guide.

ATTACHING THE PAGE

Peel off the protective backing and affix it on page 127 of your 1993 Probe Owner Guide.

CONTACT YOUR DEALER

If you want a dealer to affix the page, contact him. Be sure that you bring this letter and the new sticker page with you when you visit the dealer. There is no charge to you for this service.

We are taking this action as part of our ongoing efforts to maintain owner confidence in our products. We hope this program will confirm your continued satisfaction in your Ford built car.

Technical Service Bulletin # **94B49** Date: **940701**

Overview of Program 94B49

July, 1994

1993 Ford Probe L4-121 2.0L DOHC VIN A MFI

TO: All Ford Dealers

SUBJECT:
Owner Notification Program 94B49 - Certain 1993 Model Year Ford Probes - Shifter Boot Replacement.

OASIS	-	Yes
OWNER LIST	-	Yes
PARTS RETURN	-	No
PROGRAM TIMING	-	Affected vehicles are eligible for this program through June 30, 1995, regardless of mileage. (After June 30, 1995, a vel

AFFECTED VEHICLES
Certain 1993 Model Year Ford Probes equipped with manual transmissions, and produced from Job # 1, 1993 through February 16, 1993.

REASON FOR THIS PROGRAM
The shifter boot on these vehicles is susceptible to premature wear, and may develop cracks in the creased areas.

SERVICE ACTION
To correct this condition, the shifter boot will be replaced on the affected vehicles.

REFUNDS
Only for owner-paid repairs made before the date of the Owner Letter or after the date of the Owner Letter if an emergency repair was made away from the selling dealer.

ATTACHMENTS
Attachment I
- Administrative Information
- Refund Codes

Attachment II
- Labor Allowances
- Parts Ordering Information

Attachment III
- Technical Information

Attachment I - Administrative Information

OASIS
YOU MUST USE OASIS TO DETERMINE IF A VEHICLE IS ELIGIBLE FOR THIS PROGRAM.

PLEASE NOTE
CORRECT ALL VEHICLES IN STOCK BEFORE DELIVERY

PROMPTLY CORRECT
- Affected vehicles on the enclosed list.

- other eligible vehicles which are brought to your dealership.

DEALER-OWNER CONTACT
Immediately contact any owner whose name is not on the list. Give owner a copy of the Owner Letter. Arrange with the owner for a service date.

FCSD CONTACT
Talk with your FCSD Service Zone Manager about program concerns.

FORM 1863
Enter 1863 claims using DWE.

See Warranty and Policy Manual:
- Section 5.6 - 1/Section 6.1 - 24
  (Owner Notification Programs)

OWNER REFUNDS
See Warranty and Policy Manual:

- Section 6.1 - Pages 25 through 26 (Owner Refund)

For owner-paid repairs made before date of the Owner Letter (or after the date of the Owner Letter if an emergency repair was made away from the selling dealer):

- Submit on separate Form 1863 using the codes shown below:

1993 Ford Probe L4-121 2.0L DOHC VIN A MFI

Program Code Box	-	94B49
Causal Basic Part Number	-	7277
Condition Code	-	30
Labor Operation (1st line)	-	REFUND
Labor Operation (2nd line)	-	ALLOW
Administrative Allowance	-	0.2 Hrs.
Customer Concern Code	-	N99

Attachment II - Labor and Parts Information

LABOR ALLOWANCES	HOURS	LABOR OPERATION
Replace Shifter Boot (Includes Remove and Replace Armrest).	0.4 Hrs.	B49B
Replace Shifter Boot (Without Armrest).	0.3 Hrs.	B49C

OWNER NOTIFICATION PROGRAM 94B49
Probe - Shifter Boot

PARTS REQUIREMENTS

Parts will not be direct shipped for this program. Order your parts requirements through normal order processing channels.

PART NUMBER	DESCRIPTION	PRICE	DEALER
F32Z-7277-B	Shifter Boot	$14.39	

Parts prices current until next issue of Master Price Book. For latest prices, check or call your:

- Order Processing Center
- DOES II
- Updated Price Book

CLAIMS PREPARATION

- Use Form 1863
- Enter using DWE
- Use claim information shown below:

Program Code	-	94B49
Causal Basic Part Number	-	7277
Condition Code	-	30
Labor Operation	-	As Appropriate Above
Customer Concern Code	-	N99

Attachment III - Technical Information

OWNER NOTIFICATION PROGRAM 94B49
PROBE - SHIFTER BOOT

SHIFTER BOOT REPLACEMENT

NOTE:
IF VEHICLE IS EQUIPPED WITH A CENTER ARMREST, COMPLETE ALL STEPS OUTLINED BELOW. IF VEHICLE IS NOT EQUIPPED WITH A CENTER ARMREST, PERFORM STEP # 1, THEN PROCEED TO STEP # 6.

ARMREST:

1. Disconnect the battery ground cable.

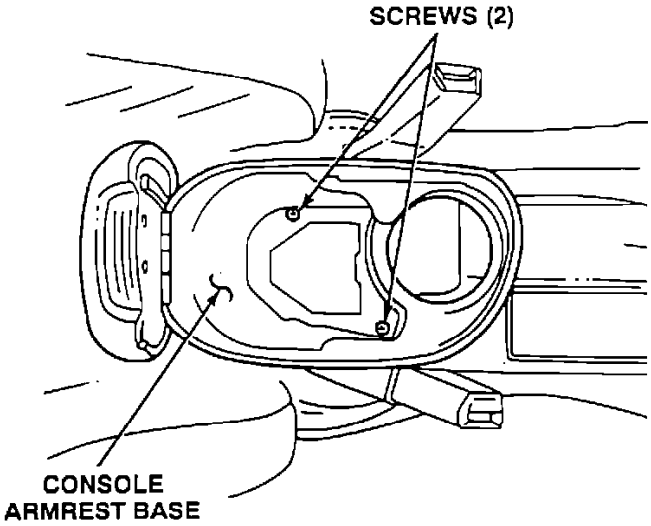

FIGURE 1

2. Open the console armrest and remove the two screws that attach the console armrest base to the console armrest compartment. See Figure 1.

3. Remove the console armrest base.

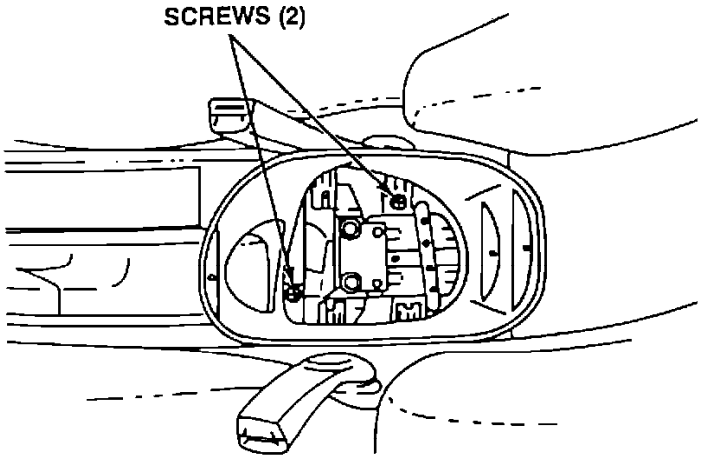

FIGURE 2

4. Remove the two screws that attach the console armrest compartment to the console panel ash receptacle bracket. See Figure 2.

5. Remove the console armrest compartment.

6. If equipped, unsnap the coin tray from the console finish panel.

7. Engage the parking brake control, bringing it to as vertical a position as possible.

8. Empty the instrument panel receptacle.

9. Unscrew the shift control selector lever knob.

10. Remove the console finish panel by gently pulling straight up at each corner and the center to unclip it from the bottom half of the floor console panel.

11. Remove the four screws at the base of the shifter boot, and discard the old shifter boot.

INSTALLATION:

To install, reverse the procedure for removal.

NOTE:
WHEN REINSTALLING THE SHIFTER CONTROL SELECTOR LEVER KNOB, MAKE CERTAIN THAT IT IS PROPERLY ALIGNED.

Owner Letter

Serial Number: 12345678901234567 94B49 Date, here

1993 Ford Probe L4-121 2.0L DOHC VIN A MFI

Mr. John Sample
123 Main Street
Anywhere, USA 12345

Ford Motor Company is providing a no-charge Service Program, Number 94B49, to owners of certain 1993 Model Year Ford Probes equipped with manual transmissions.

REASON FOR THIS PROGRAM
The shifter boot on your vehicle is susceptible to premature wear, and may develop cracks in the creased areas.

NO CHARGE SERVICE
At no charge to you, your dealer will replace the shifter boot in your vehicle.

Affected vehicles are eligible for this program through June 30, 1995, regardless of mileage. (After June 30, 1995, a vehicle is still eligible for this program if it is within the 36 month / 36,000 mile Bumper-to-Bumper warranty).

HOW LONG WILL IT TAKE?
The time needed for this service is about one (1) hour. However, due to service scheduling times, your dealer may need your car for one full working day.

CALL YOUR DEALER
Ask for a service date and if parts are in stock.

If your dealer does not have the parts in stock, they can be ordered before scheduling your service date. Parts would be expected to arrive within a week.

When you bring your car in, show the dealer this letter.

If you misplace this letter, your dealer will still do the work, free of charge.

REFUNDS
If you paid to have this service done before the date of this letter, Ford is offering a full refund. For the refund, please give your paid original receipt to your Ford dealer.

CHANGED ADDRESS OR SOLD THE CAR?
Please fill out the enclosed prepaid postcard and mail it to us if you have changed your address or sold the car.

We are taking this action as part of our ongoing efforts to maintain owner confidence in our products. We hope this program will confirm your continued satisfaction in your Ford built car.Technical Service Bulletin # **94B53** Date: **940901**

Overview of Program 94B53

September, 1994

TO: All Ford Dealers

SUBJECT:
Owner Notification Program 94B53 - Certain 1993/1994 Model Year Ford Probes, and Certain 1994 Model Year Ford Aspires - Owner Guide Revision - Child Restraint Seat Tether Anchor Installation.

OASIS	- No
OWNER LIST	- No
PARTS RETURN	- No

AFFECTED VEHICLES

1993 Model Probes built from Job # 1, through August 30, 1993. 1994 Model Ford Probes built from Job # 1, through February 15, 1994. Also, 1994 Model Aspires released from February 1, 1994 through March 2, 1994.

REASON FOR THIS PROGRAM

The Owner Guide furnished with some of the affected vehicles does not describe the proper method of securing the child restraint seat tether anchor. This could result in improper installation of the child restraint seat tether anchor bolt.

SERVICE ACTION

To correct this condition, owners of the affected vehicles will be mailed correction sticker pages and asked to affix them to their Owner Guide as follows:
* 1993 Model Year Ford Probes, pages 33 and 34.

* 1994 Model Year Ford Probes, pages 52 and 53.
* 1994 Model Year Aspires, pages 56 and 57.

Owners may also return to their dealer to have the corrected sticker pages affixed.

ATTACHMENTS

Attachment I
- Administrative Information

Attachment II
- Labor Allowances
- Parts Ordering Information

Attachment I - Administrative Information

OASIS

THIS PROGRAM WILL NOT APPEAR IN OASIS.

PLEASE NOTE
CORRECT ALL VEHICLES IN STOCK BEFORE DELIVERY

PROMPTLY CORRECT

- Affected vehicles on the enclosed list.

- Other eligible vehicles which are brought to your dealership.

DEALER-OWNER CONTACT

Immediately contact any owner whose name is not on the list. Give owner a copy of the Owner Letter. Arrange with the owner for a service date.

FCSD CONTACT

Talk with your FCSD Service Zone Manager about program concerns.

FORM 1863

Enter 1863 claims using DWE.

See Warranty and Policy Manual:

- Section 5.6 - 1/Section 6.1 - 24
  (Owner Notification Programs)

Attachment II - Labor and Parts Information

OWNER NOTIFICATION PROGRAM 94B53 OWNER GUIDE CORRECTION

PARTS REQUIREMENTS

NONE

Owners will be mailed correction sticker pages to be affixed to their car's Owner Guide as follows:

1993 Model Year Ford Probes, pages 33 and 34.
1994 Model Year Ford Probes, pages 52 and 53.
1994 Model Year Aspires, pages 56 and 57.

Owners may also return to their dealer to have the corrected sticker pages affixed. Refer to the following labor allowance and claim processing information.

Note:
If additional sticker pages are required, they may be obtained at no charge by calling Renkim Corporation on 1-800-352-5621.

LABOR ALLOWANCES	HOURS	LABOR OPERATION
Affix Correction Stickers to Pages of Owner Guide Stated Above	0.2 Hrs.	B53B

CLAIMS PREPARATION

- Use Form 1863

1993 Ford Probe L4-121 2.0L DOHC VIN A MFI

- Enter using DWE
- Use claim information shown below:

Program Code	- 94B53
Causal Basic Part Number	- MISC
Condition Code	- 08
Labor Operation	- B53B
Customer Concern Code	- N99

Owner Letter - 1993 Ford Probe

Serial Number: 12345678901234567 94B53 Kit BB September, 1994

Mr. John Sample
123 Main Street
Anywhere, USA 12345

REASON FOR THIS LETTER

The Owner Guide included with your 1993 Ford Probe does not describe the proper method of securing the child restraint seat tether anchor. This could result in improper installation of the child restraint seat tether anchor bolt.

NEW PAGES PROVIDED WITH THIS LETTER

In order to provide the information necessary to properly secure the child restraint seat tether anchor, we have enclosed new Owner Guide sticker pages with this letter. Please affix these new sticker pages over the existing pages in your car's Owner Guide.

ATTACHING THE PAGES

Peel off the protective backing and affix these new pages over pages 33 and 34 of your Owner Guide.

CONTACT YOUR DEALER

If you would like the sticker pages affixed for you, contact your dealer. Be sure that you bring this letter and the new sticker pages with you when you visit your dealer. There is no charge to you for this service.

We are taking this action as part of our ongoing efforts to maintain owner confidence in our products. We hope this program will confirm your continued satisfaction in your Ford Probe.

Owner Letter - 1994 Ford Probe

Serial Number: 12345678901234567 94B53 Kit CC September, 1994

Mr. John Sample
123 Main Street
Anywhere, USA 12345

REASON FOR THIS LETTER

The Owner Guide included with your 1994 Ford Probe does not describe the proper method of securing the child restraint seat tether anchor. This could result in improper installation of the child restraint seat tether anchor bolt.

NEW PAGES PROVIDED WITH THIS LETTER

In order to provide the information necessary to properly secure the child restraint seat tether anchor, we have enclosed new Owner Guide sticker pages with this letter. Please affix these new sticker pages over the existing pages in your car's Owner Guide.

ATTACHING THE PAGES

Peel off the protective backing and affix these new pages over pages 52 and 53 of your Owner Guide.

CONTACT YOUR DEALER

If you would like the sticker pages affixed for you, contact your dealer. Be sure that you bring this letter and the new sticker pages with you when you visit your dealer. There is no charge to you for this service.

We are taking this action as part of our ongoing efforts to maintain owner confidence in our products. We hope this program will confirm your continued satisfaction in your Ford Probe.

Owner Letter - 1994 Ford Aspire

Serial Number: 12345678901234567 94B53 Kit DD September, 1994

Mr. John Sample
123 Main Street
Anywhere, USA 12345

REASON FOR THIS LETTER

The Owner Guide included with your 1994 Ford Aspire does not describe the proper method of securing the child restraint seat tether anchor. This could result in improper installation of the child restraint seat tether anchor bolt.

NEW PAGES PROVIDED WITH THIS LETTER

In order to provide the information necessary to properly secure the child restraint seat tether anchor, we have enclosed new Owner Guide sticker pages with this letter. Please affix these new sticker pages over the existing pages in your car's Owner Guide.

ATTACHING THE PAGES

Peel off the protective backing and affix these new pages over pages 56 and 57 of your Owner Guide.

CONTACT YOUR DEALER

If you would like the sticker pages affixed for you, contact your dealer. Be sure that you bring this letter and the new sticker pages with you when you visit your dealer. There is no charge to you for this service.

We are taking this action as part of our ongoing efforts to maintain owner confidence in our products. We hope this program will confirm your continued satisfaction in your Ford Aspire.

Technical Service Bulletin # **93S64** Date: **930601**

Overview of Recall 93S64

RECALL NUMBER 93S64

Date: June, 1993

At Dealers By as Req'd. 0% of Parts Direct Shipped to Dealers

At PDC by

Date in Owner Letter: June, 1993

TO: All Ford Dealers

SUBJECT:
Safety Recall 93S64 - Certain 1993 Model Year Probes - Liftgate Strut Pivot Pin.

AFFECTED VEHICLES
Certain 1993 Model Year Probes produced from April 16, 1992, through June 7, 1992.

REASONS FOR RECALL
On some of the affected vehicles, one of the lower pivot pins of the liftgate struts may separate from its mount. This may cause the liftgate to drop suddenly.

Approximately 4000 vehicles are affected by this recall. Of these, approximately 100 are suspected of having an undersized rivet head on one of the liftgate strut pivot pins.

To correct this condition, the pivot pins will be inspected and, if necessary, the liftgate struts will be replaced.

RENTAL CARS
Should the struts require replacement, Ford Motor Company will pay costs (not to exceed $25 per day) associated with rental vehicles except fuel costs which will be at owner's expense.

SPECIAL TOOL
Each dealer, (Ford Dealers Only) will receive a special tool to be used in the inspection described in the technical section of this letter. A tool is included with this letter.

ATTACHMENTS

1993 Ford Probe L4-121 2.0L DOHC VIN A MFI

Attachment I
- Administrative Information

Attachment II
- Labor Allowances
- Parts Ordering Information

Attachment III
- Technical Information

Attachment I - Administrative Information

ATTACHMENT I

OASIS
YOU MUST USE OASIS TO DETERMINE IF A VEHICLE IS ELIGIBLE FOR THIS RECALL.

PLEASE NOTE
CORRECT ALL VEHICLES IN STOCK BEFORE DELIVERY. FEDERAL LAW REQUIRES DEALERS TO COMPLETE ANY OUTSTANDING SAFETY RECALL SERVICE BEFORE A NEW VEHICLE IS DELIVERED TO THE BUYER OR LESSEE. VIOLATION OF THIS REQUIREMENT BY A DEALER COULD RESULT IN A CIVIL PENALTY OF UP TO $1,000 PER VEHICLE.

PROMPTLY CORRECT
Affected vehicles on the enclosed list.

Other eligible vehicles which are brought to your dealership.

DEALER-OWNER CONTACT
Immediately contact any owner whose name is not on the list. Give owner a copy of the Owner Letter, and arrange a service date.

DISTRICT CONTACT
Advise district office if:
- an owner cannot be contacted.
- an owner does not make a service date.

FPSD CONTACT
Talk with your FPSD Service Zone Manager about all matters.

FORM 1863/64
Submit 1864 claims using DWE for all completed vehicles. You may use your original 1863 for your record file copy.

WARRANTY AND POLICY MANUAL
See Section 6.3 pages 5 through 8 of your Warranty and Policy Manual for claims preparation.

PARTS RETURN
See Attachment II, for information on shipping of removed strut(s) to the Warranty Parts Return Center

Attachment II - Labor and Parts Information

ATTACHMENT II

SAFETY RECALL 93S64

1993 Probe Liftgate Strut Pivot Pin

LABOR ALLOWANCES

Inspect

0.2 Hrs. - Insert in Box "A" on Form 1864

Remove/Install One Liftgate Strut (Includes Inspection Time Above, and Supplementary Time for Second Drive-in of Vehicle).

0.4 Hrs. - Insert in Box "B" on Form 1864

Remove/Install Both Liftgate Struts (Includes Inspection Time Above, and Supplementary Time for Second Drive-in of Vehicle).

0.5 Hrs. - Insert in Box "C" on Form 1864

Administrative Allowance 0.1 Hrs.

NOTE:
Add 0.1 hour Administrative Allowance to the total repair time.

1993 Ford Probe L4-121 2.0L DOHC VIN A MFI

PARTS REQUIREMENTS
Parts will not be direct shipped for this recall. Order your parts by calling Renkim Corporation (1-800-325-5621). When ordering your parts, please be prepared to do the following:

^ Announce Recall 93S64
^ Give your name, Dealer name, P&A code
^ VIN, engine, transmission, rear wiper/washer options

PARTS RETURN

Return the removed strut(s), freight prepaid to:

Warranty Parts Return Center
1285 South Mill Street
Plymouth, Mi. 48170
c/o Safety Recall 93S64

CLEARLY MARK ON OUTSIDE OF BOX: PROGRAM 93S64

Wire tag the removed strut(s) - include your:

- P&A Code
- Vehicle VIN Number
- Program 93S64

NOTE:
The Warranty Parts Return Center will not be issuing an FPS-700 for the return of this strut(s). Therefore, return removed strut(s) immediately.

Attachment III - Technical Instructions

SAFETY RECALL 93S64
1993 PROBE LIFTGATE STRUT

TECHNICAL INSTRUCTIONS

INSPECTION:

SAFETY RECALL 93S64

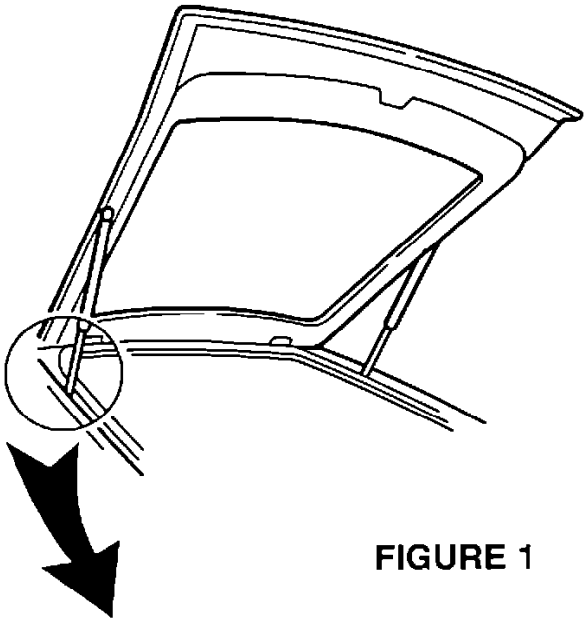

FIGURE 1

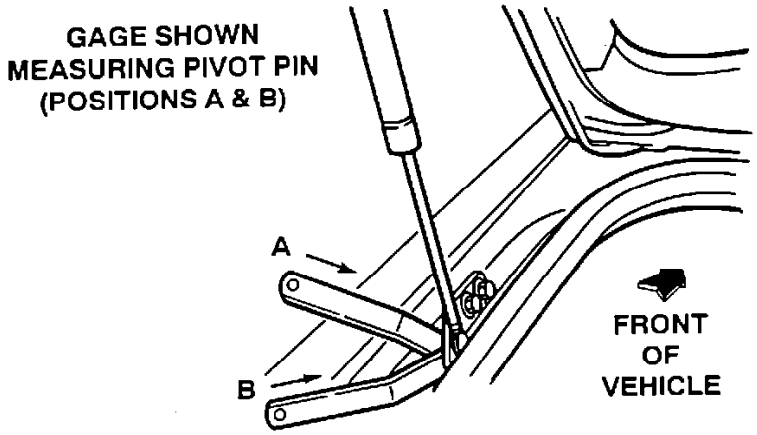

FIGURE 2

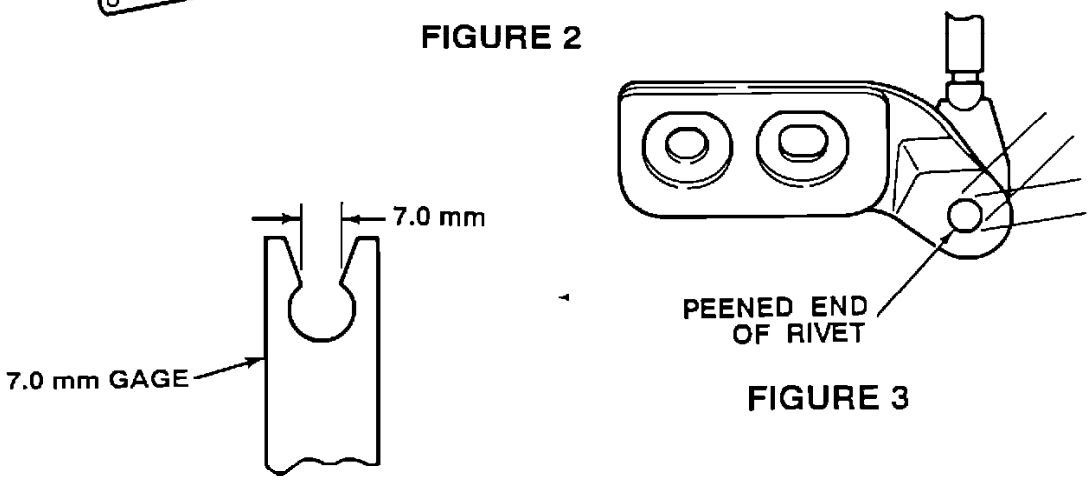

FIGURE 3

1. Open the liftgate. Figure 1.

2. Measure the diameter of the peened end (bracket side) of the rivet (see Figure 3) that attaches the liftgate strut, using the 7.0 mm gauge provided. It should be measured in at least two different places. See A & B, Figure 2.

(NOTE:
This Is done by placing the open end of the gauge flat against the bracket and sliding it toward the peened end of the rivet).

3. If either measurement result is:

   a. OVER 7.0 mm Gauge won't slide by peened end. This liftgate strut is O.K., repeat step two for the other side.

   b. UNDER 7.0 mm Gauge will slide by peened end. This lift gate strut MUST be replaced. Proceed to the replacement procedure.

IMPORTANT NOTICE:
IF AFTERMARKET ACCESSORIES (I.E. SPOILERS ETC.) HAVE BEEN ADDED TO THE LIFTGATE ON THIS 1993 PROSE:

1. The factory struts may have been replaced. If the factory struts have been replaced by aftermarket struts do nothing. Release the vehicle.

2. If it is necessary to replace the factory liftgate strut(s) per safety recall 93S64, verify that the replacement struts are adequate for proper liftgate operation.

REMOVAL:

REPLACEMENT PROCEDURE (TWO PEOPLE NEEDED... A TECHNICIAN & ASSISTANT)

1. Open the liftgate, have an assistant hold the liftgate.

2. Remove the strut from the ball stud, remove and discard the ball stud.

3. Remove the two lower bolts (12 mm.) from the bottom strut bracket and remove strut.

INSTALLATION:

1. Install the new ball stud and tighten to 16-22 N-m (12-16 ft.lbs.), and install (push) the new strut on the ball stud.

2. Install the two lower bolts to the bottom strut bracket and tighten to 9-12 N-m (79-122 in.lbs.)

Owner Letter

Serial Number: 12345678901234567 93S64 June, 1993

Mr. John Sample
123 Main Street
Anywhere, USA 12345

This notice is sent to you in accordance with the requirements of the National Traffic and Motor Vehicle Safety Act.

Ford Motor Company has determined that a defect which relates to motor vehicle safety exists in certain 1993 model year Probe vehicles.

SAFETY DEFECT
Some of the affected vehicles may have been produced with an undersized rivet head on one of the liftgate strut pivot pins.

PROBLEM
Under certain conditions, one of the liftgate struts may separate from its mount. Should this occur, the remaining strut would not support the liftgate in an open position. This may cause the liftgate to drop suddenly, which could result in injury if someone is struck by the descending liftgate.

REPAIRS
At no charge to you, your dealer will inspect the liftgate struts and, if necessary, replace them. Dealers currently have instructions and parts ordering information.

HOW LONG WILL IT TAKE?
The time needed for this service is about one hour. However, due to service scheduling times, your dealer may need your vehicle for one full working day. If the inspection reveals that a replacement liftgate strut is required, your dealer will have to order the required part.

RENTAL CARS
Should one of the liftgate struts of your Ford Probe require replacement, your dealer will provide you with a free (except for fuel) courtesy car until the replacement liftgate strut arrives.

CALL YOUR DEALER
Call your dealer without delay. Ask for a service date.

When you bring your car in, give the dealer this letter.

If you misplace this letter, your dealer will still do the work, free of charge.

CHANGED ADDRESS OR SOLD THE CAR?
Please fill out the enclosed prepaid postcard and mail it to us if you have changed your address or sold the car.

If the dealer doesn't make the repair promptly and without charge, you may contact the Ford Customer Assistance Center, 300 Renaissance Center, P. 0. Box 43360, Detroit, Michigan 48243. You also may send a complaint to the Administrator, National Highway Traffic Safety Administration, 400 Seventh Street, S.W., Washington, D.C. 20590 or call the toll free Auto Safety Hotline 1-800-424-9393 (Washington, D.C. area residents may call 366-0123).

We regret the inconvenience this service may cause you, but we want you to have the work done for your safety and satisfaction with your Ford Probe.

1993 Ford Probe L4-121 2.0L DOHC VIN A MFI

Recall 93V058000: Liftgate Pivot Pin Defect

THE LOWER PIVOT PIN THAT JOINS THE LIFTGATE GAS STRUT TO THE BODY CAN SEPARATE FROM THE LOWER STRUT MOUNTING BRACKET DUE TO AN UNDERSIZED RIVET HEAD.

PIVOT PIN SEPARATION CAUSES THE LIFTGATE TO DESCEND SUDDENLY, RESULTING IN AN INJURY IF SOMEONE IS STRUCK BY THE LIFTGATE.

REPLACE LIFTGATE STRUT ASSEMBLIES HAVING UNDERSIZED PIVOT PIN RIVET HEAD

DIAMETERS WITH ASSEMBLIES WITH ADEQUATE PIVOT PIN RIVET HEADS.

OWNER NOTIFICATION BEGAN JUNE 25, 1993. OWNERS WHO TAKE THEIR VEHICLES TO AN AUTHORIZED DEALER ON AN AGREED UPON SERVICE DATE AND DO NOT RECEIVE THE FREE REMEDY WITHIN A REASONABLE TIME SHOULD CONTACT FORD AT 800-392-3673. ALSO CONTACT THE NATIONAL HIGHWAY TRAFFIC SAFETY ADMINISTRATION'S AUTO SAFETY HOTLINE AT 1-800-424-9393.Technical Service Bulletin # **93S78** Date: **950901**

Recall - Child Restraint Tether Bolt Replacement

93S78

SAFETY RECALL

1993 Model Year Probe - Child Restraint Tether Anchorage Bolt Kit

Dealer Letter

Attachment I
^ Administrative Information

Attachment II
^ Labor Allowances
^ Parts Ordering Information
^ Parts Return

Attachment III
^ Technical Instructions

Customer Notification Letter

Attachment I - Administrative Information

OASIS
Use OASIS to determine vehicle eligibility for this or other service actions.

Tell owners of any other uncompleted service action. Attempt to complete all service actions during a single visit by the owner.

Promptly Perform Recall On:
Affected vehicles on the enclosed list.

Other affected vehicles brought to your dealership.

All affected vehicles in dealer stock before sale or delivery to owners.

Dealer-Owner Contact/Action
Immediately contact any owner of an affected vehicle whose name does not appear on the enclosed list. Arrange a service date. Give the owner a copy of the owner letter. Replace the Child Tether Anchorage Bolt Kit with kit part number F42Z-61613D74-AA and sticker the two pages of the Owner Guide. Mutilate and scrap the removed kit.

Ask the customer if the old child restraint Anchorage Bolt Kit, provided with the vehicle, had been installed. If so, advise the customer that the anchor nut also requires replacement (refer to Attachment III) and arrange a service date.

Report name and address changes or corrections using DREWAR application on your DCS terminal (refer Warranty and Policy Manual Section 8.0). Use DAWIS to identify the current record.

Reimbursement For Completion And Claims Preparation Instructions
Refer to Warranty and Policy Manual Section 6.3 pages 8-13.

93S78 must be shown in the Recall box.

Attachment II - Labor and Parts Information

1993 Ford Probe L4-121 2.0L DOHC VIN A MFI

Labor Allowances

DESCRIPTION	LABOR TIME	LABOR CODE
Inspection of Body End Panel Weld Nuts. Confirmation and if required: Installation of new Sticker Pages (2) in Owner Guide; Replacement of Child Restraint Tether Anchorage Bolt Kit from Glove Compartment	0.3 Hrs.	A
Install one New Child Restraint System Tether Anchor Nut Plate (includes Inspection above) (See Note 2 Below)	1.5 Hrs.	B
Install Two New Child Restraint System Tether Anchor Nut Plates (Includes Inspection above) (See Note 2 Below)	1.9 Hrs.	C
Administrative Allowance (See Note 1 Below)	0.1 Hrs.	

NOTE:

1: Add the 0.1 hour Administrative Allowance to the total labor time before inputting.

NOTE:

2: This input will result in an overnight Warranty Claim Return Facsimile. Return replaced body end panel nut plate(s) with the Warranty Claims Facsimile copy to the Warranty Parts Evaluation Centre. Parts and Facsimile not returned within 90 days will result in claim chargeback.

Parts Ordering Information
Order your parts requirements through normal order processing channels from your Servicing Parts Distribution Centre.

PART NUMBER	DESCRIPTION
F32Z-61624K86-A	Kit-Child Restraint Seat Tether Nut Repair
F3AZ-19515-SA	Superseal (Package of 12)

NOTE:

Claim $1.00 per vehicle for one side repair (For use with Labor Code B repairs.)

Claim $2.00 per vehicle for both sides repair (For use with Labor Code C repairs.)

Additional Information
Owners will be mailed:

^ A new "Child Restraint Tether Anchorage Bolt Kit" (Part No. F42Z-61613D74-AA) and;

^ two Owner Guide sticker pages (for pages 33 and 34). Owners of vehicles in Quebec will also receive French copy Owner Guide sticker pages.

If additional Owner Guide sticker pages are required, they may be obtained at no charge by calling RENKIM at 1-800-344-5621. Please provide:

^ Your Dealer Code

^ Recall Number 93S78

^ Indicate sticker pages language preference--English or French

^ VIN of Vehicle

^ Individual's name at dealership whose attention the sticker pages should be sent to

Attachment III - Technical Instructions

Technical Instructions

NOTE:

Customers may return vehicles because they are unsure if the incorrect Child Restraint Tether Anchorage Bolt Kit had been installed. Under these circumstances, follow the INSPECTION procedure described below.

Inspection

1. Remove rear interior trim panel.

2. Inspect thread area of the Child Restraint Tether Anchor Nut(s) (check both nuts).

3. If there is any evidence of thread galling or stripping, proceed to CHILD RESTRAINT SYSTEM TETHER ANCHOR NUT REPAIR section of this attachment.

4. If there is no evidence of thread damage:

   a. reinsert the 1/4 inch rubber plugs (or equivalents) into the anchorage nut.

   b. ensure that the new Child Tether Kit (identified with part number F42Z-61613D74-AA is in the vehicle glove box and that the old kit is removed, mutilated and scrapped.

   c. ensure Owner Guide has been stickered with the revised pages (pages 33 and 34).

All vehicles built for sale in Canada include a tether anchor hardware kit for use with Canadian child safety seats.

All vehicles built for sale in the USA do not include a tether anchor hardware kit for use with child safety seats. However, attachment holes (at each rear seating position) have been provided in your vehicle to attach the tether anchor hardware. Tether anchor hardware kits can be obtained at no charge from any Ford or Lincoln-Mercury dealer. Be sure to follow the child safety seat manufacturer's instructions.

Installing the Anchor Bracket

1. **Open the liftgate and take out the luggage compartment cover (if equipped).**
2. **The anchorage nuts used to secure the tether anchor are located in the rear body panel behind the trim at the rear of the luggage compartment. Remove the trim panel. The backside of the panel is scored at the locations of the anchorage nuts. Make a hole the size of the scoring in the anchor nut. The hole should be made on the same side of the vehicle as the child safety seat will be located. Reinstall the trim panel.**
3. **Install the hardware for anchoring the tether following the instructions in the tether anchorage hardware kit.**
4. **Re-install luggage compartment cover.**

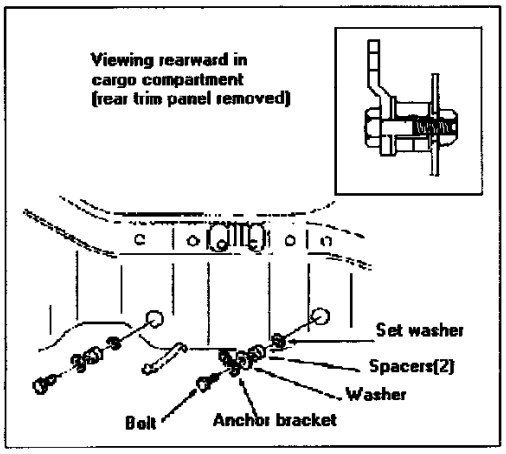

Installing the anchor bracket

Warning: The anchorage nuts in the rear body panel have an 8 mm metric non-locking thread. A torque wrench is required to firmly secure the bolt to the weld nut. Some child restraints supply a non-metric bolt with a different thread. Do noy use a non-metric bolt as it may be impossible to screw it all the way into the hole, resulting in inadequate retention of the child restraint. If you need a metric bolt or assistance, any Ford or Lincoln-Mercury dealer will be happy to assist you.

Warning: If the anchor bolt(s) are ever removed, the hole(s) in the rear panel must be sealed to prevent the possibility of exhaust fumes entering the passenger compartment.

1993 Probe

IR93S78A

5. Install rear interior trim panel.

6. Release vehicle.

TECHNICAL INSTRUCTIONS CHILD RESTRAINT SYSTEM TETHER ANCHOR NUT REPAIR 1993 PROBE
Kit Contents - Part No. F32Z-61624K86-A

PART NUMBER	DESCRIPTION	QUANTITY
	Nut Plate (Painted and Drilled)	2
	Bolt M6	4
	Nut M6	4
	Rubber Plug	2
I.S.8160A	Instruction Sheet	1

NOTE:

1993 Ford Probe L4-121 2.0L DOHC VIN A MFI

Only use this repair procedure if other than an 8 mm bolt was used to retain the child restraint system tether anchor.

1. Remove

   a. Trunk lower side and rear trim panels. (Refer to 1993 Probe Shop manual, Section 01-05, pages 1 and 5).

   b. Rear combination lamp assembly. (Refer to 1993 Probe Shop Manual, Section 17-01, page 17-01-53).

   c. Rear license plate, rear bumper cover and foam insert. Do not remove rear bumper. (Refer to 1993 Probe Shop Manual, Section 01-19, pages 4 and 5).

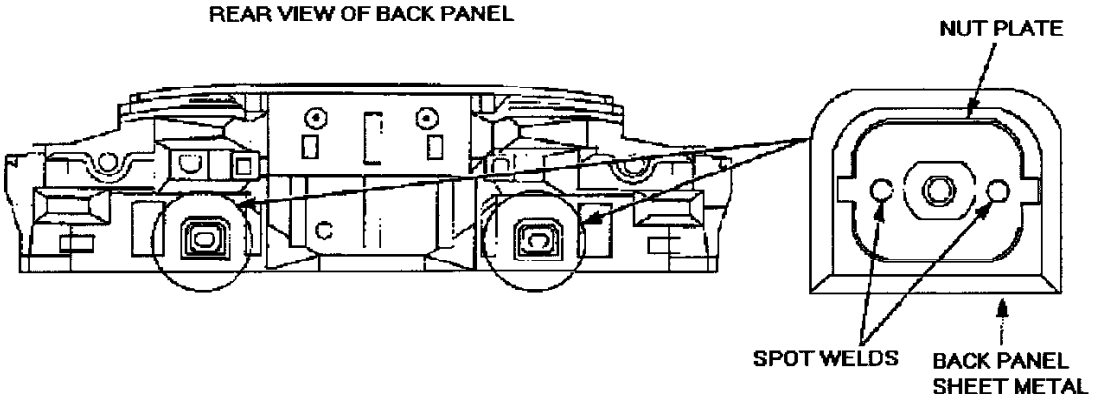

Figure 1

2. Locate the Child Restraint Tether anchor nut plate(s). (Refer to Figure 1)

   a. Remove and keep rubber plug(s) from weld nut(s).

   b. From the outside of the vehicle drill out the two (2) spot welds on the nut plate(s), in which the improper bolt was installed, with an 8 mm (5/16 inch) diameter drill to remove the welded-in nut plate.

   NOTE:

   ^ Center punch the spot welds to prevent the drill from wandering.

   ^ As an aid to removing the welded-in nut plate(s), after drilling out the spot weld(s), use a stiff flat scraper to pry nut plate from the back panel.

   ^ Clean the exposed surface area using a wire brush.

3. Fit the new nut plate onto the outside surface of the back panel in the same location occupied by the removed nut plate. Retain in position with an 8 mm Child Restraint Seat Tether bolt from Kit (Part No. F42Z-61613D74-AA, located in vehicle glove box). (SCREWED IN FROM INSIDE OF VEHICLE).

4. Locate the two corner holes in the new nut plate(s):

   a. Using a 6.5 mm (1/4 inch) diameter drill, and these holes as guides, drill out the back panel (from back of vehicle towards front of vehicle).

5. Loosen the 8 mm tether bolt(s) and remove the new nut plate(s).

   a. Remove any burrs from the inside of the back panel.

   b. Using SUPER SEAL (Part No. F3AZ-19515-SA), or equivalent, liberally coat the area (on the back panel) occupied by the nut plate(s).

   NOTE:
   Place a cloth on the inside surface over the holes to avoid SUPER SEAL overspray onto vehicle interior.

   c. Using SUPER SEAL (Part No. F3AZ-19515-SA), or equivalent, coat the inner back panel area from which the burrs were removed.

   d. Reinstall the new nut plate(s) using the 8 mm tether bolt(s).

6. Install the two M6 bolts and nuts:

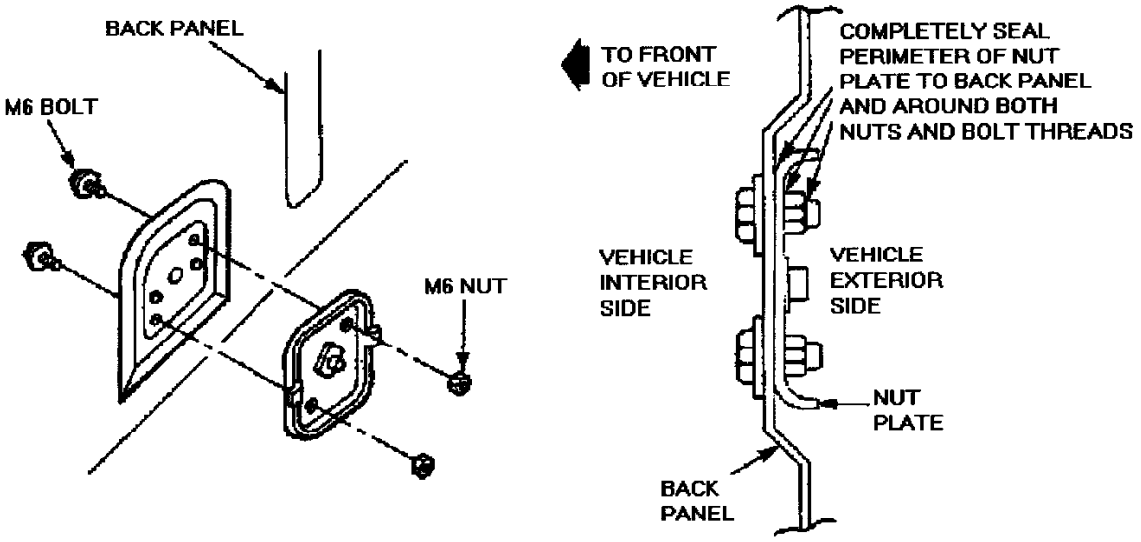

Figure 2

a. Torque to 8.3 +/- 1.5 N-m (6.1 +/- 1.1 lb.-ft.). (Refer to Figure 2)

7. Completely seal the perimeter of the nut plate(s) to the back panel and around the nuts and bolts (thread area) using SUPER SEAL (Part No. F3AZ-19515-SA), or equivalent. (Refer to Figure 2)

8. Remove the Child Restraint Tether anchor bolt installed in Step 5. Clean off any SUPER SEAL material on this bolt.

9. If customer DOES NOT WANT the Child Restraint Tether Anchor Kit installed:

   a. Keep the anchor bolt(s), removed in Step 8, with the Anchor Kit package in vehicle glove box for future use.

   b. Install rubber plug(s) (from inside of vehicle) into the anchorage nut(s).

10. If customer WANTS the Child Restraint Tether Anchor Kit installed:

   a. Make a hole(s) the size of the scoring in the rear trim panel to provide access to the anchorage nut(s). The backside of the trim panel is scored at the location(s) of the anchorage nut(s).

   b. Keep the rubber plug(s) removed in Step 2 with the Anchor Kit in the glove box for future use.

   NOTE:
   Install the tether anchor bolt(s) after step 11 is completed (per the anchor kit instructions). Torque to 22.1 +/- 4.5 N-m (16.3 +/- 3.3 lb.-ft.).

11. Reinstall the rear foam insert, bumper cover, rear combination lamp assembly, license plate, trunk lower side and rear trim panel. (Refer to 1993 Probe Shop Manual, sections 01-19, 17-01 and 01-05).

Dealer Letter

To:
ALL FORD OF CANADA DEALERS

Attention:
Dealer Principal
Service Manager
Parts Manager

Subject:
Safety Recall 93S78 - 1993 Model Year Probe - Child Restraint Tether Anchorage Bolt Kit

IN OASIS
YES

Listings
YES

Parts Return
YES (Refer Attachment II).

1993 Ford Probe L4-121 2.0L DOHC VIN A MFI

Recall Time Limitation
None

^ Please read and circulate these instructions to your Service and Parts personnel.

^ Dealership personnel should become familiar with this recall and be able to respond to owner inquiries.

^ Please ensure servicing technicians understand and comply with the technical instructions for this recall.

Vehicles Affected
All 1993 Model Year Probe.

Reason For Recall
The Child Restraint Tether Anchorage Bolt Kit originally provided with the vehicle contains 5/16 inch x 24 UNF bolts. The weld nuts affixed to the body end panel, into which the anchorage bolts are to be installed, contain 8 mm x 1.25 mm threads. Although testing has confirmed that the combination of a National Fine Thread bolt and a Metric nut meets the strength requirements of Canada Motor Vehicle Safety Standard 210.1, even after several bolt removals and reinstallations, the original design intent was for a metric bolt.

In addition, information concerning the installation of the Child Restraint Tether Anchorage Bolt Kit contained in the Owner Guide (pages 33 and 34) is incorrect.

Service Action
Owners of record will be mailed two revised stick-on Owner Guide pages and a new Child Restraint Tether Anchorage Bolt Kit containing two 8 mm x 1.25 mm anchor bolts. This new Kit will be identified with Part Number F42Z-61613D74-AA.

Owners will be requested to return their vehicles to dealers for replacement of the body end panel mounted weld nut if the incorrect 5/16 bolt has previously been installed.

There will be no charge to owners for these services.

COMPANY CONTACTS: (For dealer use only)

CONCERN NATURE	CONTACT ACTIVITY	NUMBER
Technical	Technical Assistance Hotline	1-800-665-3577
Claiming Procedures	Warranty Claims Hotline	1-800-667-0088
Owner Concerns	Customer Assistance Centre Hotline	1-800-565-3673
General Administrative	Richard Neumann	(905) 845-2511 Ext. 1495
		Facsimile (905) 845-7069
General Administrative	Glenys McLeod	(905) 845-2511 Ext. 1494
		Facsimile (905) 845-7069

Attachments

Attachment I
^ Administrative Information

Attachment II
^ Labor Allowances
^ Parts Ordering Information
^ Parts Return

Attachment III
^ Technical Instructions

Owner Letter

J. Sample
123 Main Street
Anywhere, Prov.
ANA NAN

This notice is sent to you under the requirements of the Motor Vehicle Safety Act of Canada.

Ford Motor Company of Canada, Limited (Ford) has determined that a defect which relates to motor vehicle safety exists in certain 1993 Model

1993 Ford Probe L4-121 2.0L DOHC VIN A MFI

Year Probes. Our records show you own the vehicle with the serial number shown above your name and address.

Safety Defect:
The Child Restraint Tether Anchorage Bolt Kit provided with the vehicle contains 5/16 inch bolts. The weld nuts affixed to the body end panel, into which the anchorage bolts are to be installed, contain 8 mm threads. Although testing has confirmed that the combination of a National Fine Thread bolt and a Metric nut meets the strength requirements of Canada Motor Vehicle Safety Standard 210.1, even after several bolt removals and reinstallations, the original design intent was for a metric bolt. In addition, information concerning the installation of the bolt contained in the Owner Guide is incorrect.

What You Should Do:
Please remove and scrap the Child Restraint Tether Anchorage Bolt Kit originally supplied with your vehicle. Replace it with the enclosed new kit identified with part number F24Z-61613D74-AA.

Also please open your Owner Guide to pages 33 and 34. Carefully remove the paper backing from the enclosed sticker pages (one at a time). Apply the sticker page to the appropriate page in the Owner Guide.

Repairs:
If you have installed the Bolt Kit originally supplied with your vehicle, immediately contact your Ford or Mercury dealer to arrange for replacement of the rear body panel anchorage nut(s) at no charge to you.

How Long Will It Take?
The time needed for this service is about two hours. However, due to service scheduling times, your dealer nay need your vehicle for one full working day.

Call Your Dealer:
Call your dealer without delay if you installed the Bolt Kit originally supplied with your vehicle. Ask for a service date for Safety Recall 93S78. Also ask your dealer to check the OASIS system for any other service actions that may be required on your vehicle. If your dealer does not have the parts in stock, they can be ordered before scheduling your service date. Parts would be expected to arrive within a week.

When you bring your vehicle in, show the dealer this letter. If you misplace this letter, your dealer will still do the work, free of charge.

Changed Your Name, Address, or Sold the Vehicle?
If you have changed your name or address, or have sold the vehicle, please complete the enclosed prepaid postcard. Sign and date it, and mail the card to Ford.

If you have leased this vehicle to another person or organization, please immediately notify the lessee of this recall. Provide them with a copy if this letter, the enclosed Anchorage Bolt Kit and the revised Owner Guide sticker pages.

Contact the Ford "Customer Assistance Centre" at the address identified in the letterhead of this letter if any further help is needed. Please identify your vehicle's serial number in any correspondence.

We regret the inconvenience this service may cause you. We want you to have the work done for your safety and satisfaction with your Ford-built vehicle.Technical Service Bulletin # **98-2-7** Date: **980202**

Air Conditioning - Musty/Mildew Type Odors

Article No.
98-2-7

02/02/98

AIR CONDITIONING - MUSTY AND MILDEW TYPE
ODORS - SERVICE PROCEDURE

FORD:
1992-93 FESTIVA
1992-94 TEMPO
1992-97 CROWN VICTORIA, ESCORT, MUSTANG, PROBE, TAURUS, THUNDERBIRD
1994-96 ASPIRE
1995-97 CONTOUR

LINCOLN-MERCURY:
1992-94 TOPAZ
1992-97 CONTINENTAL, COUGAR, GRAND MARQUIS, SABLE, TOWN CAR, TRACER
1993-97 MARK VIII
1995-97 MYSTIQUE

LIGHT TRUCK:
1992-96 BRONCO
1992-97 AEROSTAR, ECONOLINE, EXPLORER, F SUPER DUTY F-150, F-250 HD, F-250 LD, F-350, RANGER

1993 Ford Probe L4-121 2.0L DOHC VIN A MFI

1995-98 WINDSTAR
1997 MOUNTAINEER
1997-98 EXPEDITION
1998 NAVIGATOR

MEDIUM/HEAVY TRUCK:
1992-97 F & B SERIES

This TSB article is being republished in its entirety to include the Expedition, Navigator and 1998 Windstar.

ISSUE

Musty and mildew type odors may come from the air conditioner and heater system. This odor is caused by mildew-type fungi growth in the A/C evaporator. It is most noticeable when the A/C is first turned on.

ACTION

A new Disodorizer(R) which encapsulates the mildew is now available to reduce these odors. This is a seasonal repair. Engineering effort to provide a long term repair for A/C odors will continue. Apply the Ford A/C Disodorizer(R) product (F6AZ-19G210-AA or YN-18) to the A/C system as directed in the following A/C Odor Treatment Procedure.

WARNING:
AVOID CONTACT WITH EYES AND SKIN. CONTACT WITH EYES AND SKIN WILL CAUSE IRRITATION. WEAR SAFETY GLASSES WHEN USING.

WARNING:
THIS PROCEDURE SHOULD ONLY BE PERFORMED IN WELL VENTILATED AREAS. OPEN ALL WINDOWS AND DOORS OF THE VEHICLE. LEAVE DOORS AND WINDOWS OPEN DURING THE ENTIRE PROCEDURE. AVOID BREATHING VAPORS.

WARNING:
AVOID FLAMES, SPARKS OR LIT TOBACCO PRODUCTS. THIS PRODUCT IS COMBUSTIBLE.

WARNING:
READ ALL INSTRUCTIONS AND WARNINGS PACKAGED WITH THE DISODORIZER(R).

OTHER APPLICABLE ARTICLES: 89-25B-1, 97-14-19

SUPERSEDES: 97-14-9

WARRANTY STATUS: Eligible Under The Provisions Of Bumper To Bumper Warranty Coverage

OPERATION	DESCRIPTION	TIME
980207A	Apply Disodorizer(R)	0.3 Hr.

DEALER CODING

BASIC PART NO.	CONDITION CODE
ODOR	49

OASIS CODES: 208000, 208300

A/C Order Treatment Procedure

NOTE:
THIS PROCEDURE WILL NOT BE EFFECTIVE ON ODORS EMITTED FROM AREAS OTHER THAN THE EVAPORATOR CORE. FOR EXAMPLE: MILDEW ODORS DUE TO WET CARPET WHICH ARE CIRCULATED BY THE A/C SYSTEM. BE SURE YOU HAVE IDENTIFIED THE TYPE AND SOURCE OF ODOR BEFORE PERFORMING THIS REPAIR.

The A/C System Disodorizer(R) (F6AZ-19G210-AA or YN-18) is a full strength disodorizer which requires no dilution or mixing. Each vehicle treated will require 240 ML (8 fluid ounces) to complete the procedure.

NOTE:
THE ROTUNDA A/C DISODORIZER(R) SPRAYER 164-R4700 IS ONLY TO BE USED WITH THE YN-18 A/C SYSTEM DISODORIZER(R) AND SHOULD NOT BE USED FOR ANY OTHER PURPOSE.

1993 Ford Probe L4-121 2.0L DOHC VIN A MFI

DISODORIZER® APPLICATION LOCATION			
Model Year	Vehicle	Blower Motor	Blower Motor Resistor/Controller
1992-97	Aerostar	X	
1992-96	Bronco	X	
1992-94	Continental	X	
1992-97	Econoline	X	
1992-97	Escort/Tracer	X	
1992-97	Explorer	X	
1992-97	F-150-350 Series	X	
1994-97	Probe	X	
1992-97	Ranger	X	
1992-97	Taurus/Sable	X	
1995-97	Windstar	X	
1994-96	Aspire		X
1995-97	Continental		X
1992-97	Crown Victoria/Grand Marquis		X
1992-97	Town Car		X
1992-93	Festiva		X
1992-97	F & B Series		X
1993-97	Mark VIII		X
1992-97	Mustang		X
1992-93	Probe		X
1992-94	Tempo/Topaz		X
1992-97	Thunderbird/Cougar		X
1995-97	Contour/Mystique	X	X
1997-98	Expedition	X	
1997	Mountaineer	X	
1998	Navigator	X	
1998	Windstar	X	

The A/C System Disodorizer(R) can be applied using the Rotunda A/C Disodorizer(R) Sprayer 164-R4700. The disodorizer must be applied through the blower motor or the blower motor resistor/controller opening for proper coverage. Refer to the Disodorizer(R) Application Location Chart to determine which component to remove.

NOTE:
SPRAYER MUST BE CHARGED COMPLETELY FOR PROPER ATOMIZATION OF THE DISODORIZER(R). FAILURE TO PROPERLY APPLY THE DISODORIZER(R) AS OUTLINED IN THIS TSB ARTICLE WILL NOT ALLOW ALL OF THE MICROBIAL GROWTH TO BE CONTAINED AND WILL RESULT IN AN INCOMPLETE REPAIR.

1. Open vehicle windows.

2. Disconnect A/C cycling switch electrical connector.

3. Set the following:

   ^ A/C in vent or panel mode
   ^ Temperature at full heat
   ^ Blower at high speed
   ^ Engine running at normal operating temperature
   ^ Vehicles equipped with a manually operated fresh air/recirculate air door, set the door to fresh air position

4. Run at Step 1.3 conditions for 15 minutes (this Step will dry out the system).

5. Turn ignition off.

CAUTION:
BLOWER MOTOR RESISTOR MAY BE VERY HOT.

6. Remove and disconnect blower motor or resistor/controller (refer to Disodorizer(R) Application Location Chart) by referring to the appropriate Service Manual, Section 12 or Workshop Manual, Section 412-02.

7. Insert the A/C Disodorizer(R) Sprayer (Rotunda 164-R4700) nozzle into the blower motor resistor/control opening in the evaporator case and direct toward the face of the evaporator core. Spray the Disodorizer(R) until empty.

8. Wait 10 minutes before proceeding.

9. Reinstall and reconnect blower motor or resistor/control.

10. Repeat Steps 1-5.

11. Reconnect A/C cycling switch.

12. Allow vehicle to sit for 30 minutes before returning to customer.

1993 Ford Probe L4-121 2.0L DOHC VIN A MFI

PART NUMBER	PART NAME
F6AZ-19G210-AA	A/C System Disodorizer(R)

NOTE:
REFER TO APPROPRIATE SERVICE LABOR TIME STANDARDS MANUAL FOR BLOWER MOTOR REMOVAL AND INSTALLATION OR RESISTOR REMOVAL AND INSTALLATION.

Technical Service Bulletin # **01-7-3** Date: **010416**

Fuel Pump - Whine Heard Through Radio Speakers

Article No.
01-7-3

04/16/01

^ FUEL SYSTEM - FUEL PUMP
"WHINING"/"BUZZING" NOISE COMES THROUGH
ENTERTAINMENT OR TWO - WAY RADIO SPEAKER

^ RADIO - ENTERTAINMENT OR TWO - WAY
COMMUNICATION - "WHINING"/"BUZZING" NOISE
IN SPEAKERS CAUSED BY FUEL PUMP

^ NOISE - "WHINING"/"BUZZING" - COMES THROUGH
SPEAKERS OF ENTERTAINMENT OR TWO-WAY
RADIO

FORD:

1990-1994	TEMPO
1990-1997	PROBE, THUNDERBIRD
1990-1999	ESCORT, MUSTANG, TAURUS
1990-2001	CROWN VICTORIA
1997-1999	CONTOUR
2001	TAURUS
1990	BRONCO II
1990-1996	BRONCO
1990-1997	AEROSTAR, F SUPER DUTY, F-250 HD, F-350
1990-1999	F-250 LD
1990-2001	ECONOLINE, F-150, RANGER
1991-2001	EXPLORER
1995-2001	WINDSTAR
1997-2001	EXPEDITION
1999-2001	SUPER DUTY F SERIES
2000-2001	EXCURSION
2001	ESCAPE

LINCOLN:

1990-1992	MARK VII
1990-1999	CONTINENTAL
1990-2001	TOWN CAR
1997-1998	MARK VIII
1998-2001	NAVIGATOR

MERCURY:

1990-1994	TOPAZ
1990-1997	COUGAR
1990-1999	SABLE
1990-2001	GRAND MARQUIS
1991-1999	TRACER
1997-1999	MYSTIQUE
1999	COUGAR
2001	SABLE
1993-2001	VILLAGER
1997-2001	MOUNTAINEER

This TSB article is being republished in its entirety to update the model year vehicles.

ISSUE

1993 Ford Probe L4-121 2.0L DOHC VIN A MFI

A "whining"/"buzzing" noise in the speakers of the entertainment radio or two-way radio on vehicles with an in-tank electric fuel pump may be caused by electrical noise from the fuel pump.

ACTION

Install an electronic noise Radio Frequency Interference (RFI) Filter (F1PZ-18B925-A) on the fuel pump inside the fuel tank. Refer to the following Test Procedure to confirm that the concern exists, then refer to the Service Procedure for repair details.

NOTE

SOME LIGHT TRUCKS REQUIRE ONE (1) RFI FILTER FOR EACH IN-TANK ELECTRIC FUEL PUMP ON MULTI-TANK VEHICLES.

NOTE

THIS TSB DOES NOT INCLUDE TAURUS FLEXIBLE FUEL VEHICLES (FFVS) OR 1999 RANGER 3.0L FFVS.

TEST PROCEDURE

Fuel pump radio noise is relatively constant and changes only slightly with vehicle speed. If the frequency of the noise varies or the noise comes and goes with the vehicle speed, then it is not the fuel pump and this fix will not be effective. The following procedure will help determine if the fuel pump is the cause of the radio noise:

1. Turn on the radio before the key is turned on (assuming the radio will operate without the ignition key - you may need to put the ignition key in the Accessory position).

2. Turn the ignition key to the Run position (do not start the engine).

3. The fuel pump should run for about 1 second with the key in the Run position with the engine not running. Listen for noise in the radio. If noise is present while the pump is running and stops when the pump stops, then the noise is being generated by the pump and this procedure should help.

SERVICE PROCEDURE

1. Remove the fuel pump sender assembly from the fuel tank. Refer to the appropriate model year Workshop Manual for removal procedure.

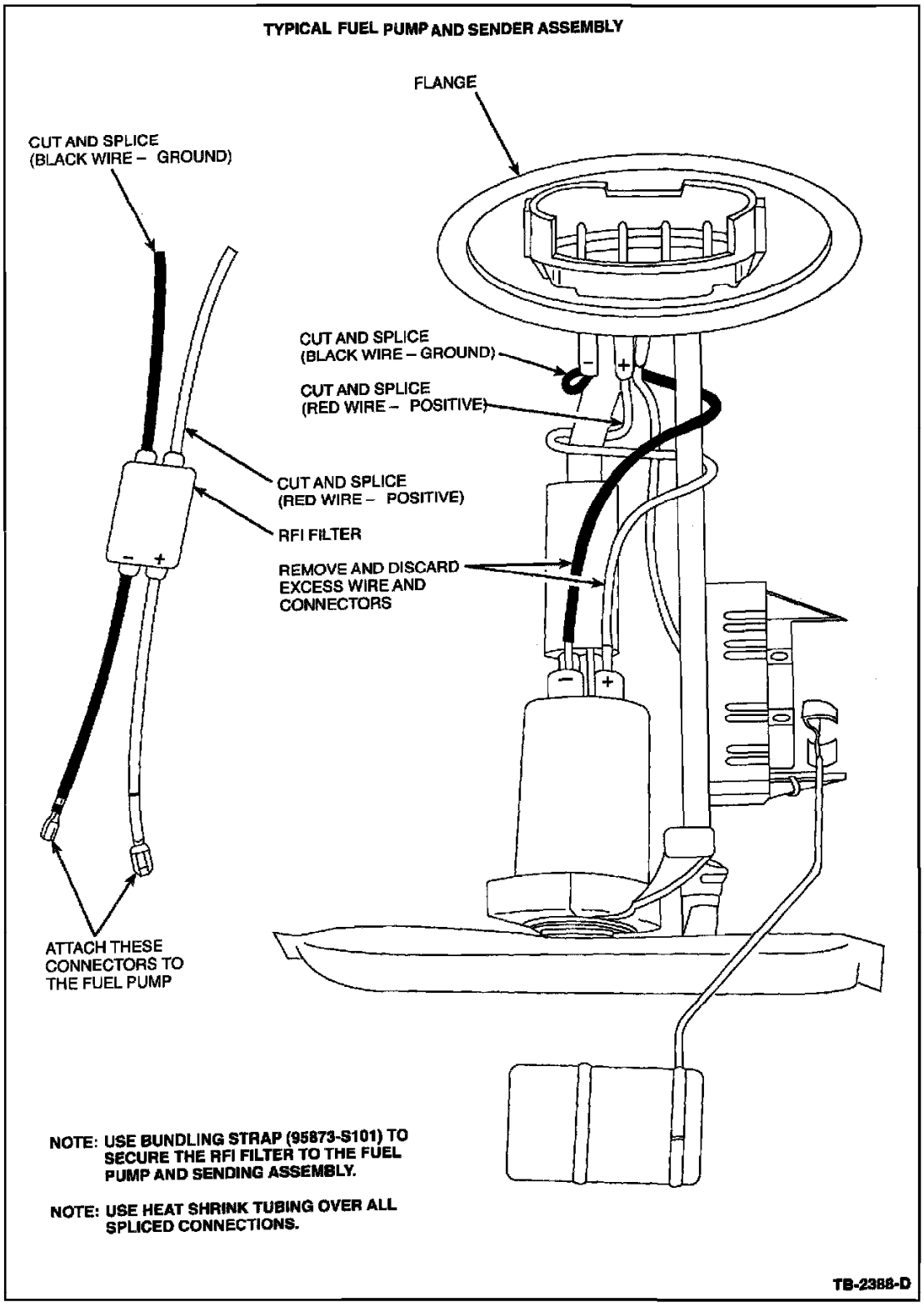

Figure 1

2. On vehicles without a fuel delivery module, remove the negative and positive connectors from the fuel pump, Figure 1.

   a. Cut the wires to the fuel pump 76 mm (3") from the flange of the fuel pump and discard the wires.

   b. Connect the RFI filter connectors to the spade terminal on the fuel pump.

   c. Cut and solder both the red and black wires of the RFI filter to the red and black wires of the flange. Use Heat Shrink Tubing (F5AZ-14A099-M) over the solder connections.

NOTE

HEAT SHRINK TUBING MUST BE USED OVER ALL SOLDERED CONNECTIONS MADE PRIOR TO THIS TSB. USE SUFFICIENT TUBING (ABOUT 50 mm (2",)) OF THE SPECIFIED TYPE TO ENTIRELY COVER EACH SOLDERED CONNECTION AND SHRINK APPROPRIATELY TO PREVENT EXPOSURE OF THE CONNECTIONS.

NOTE

FOR SOME VEHICLES WITH EXTREMELY LONG FUEL PUMP GROUND WIRE CIRCUITS, IT MAY BE NECESSARY TO

SHORTEN THE GROUND WIRE TO A POINT CLOSE TO THE FUEL TANK. IF THE GROUND IS MOVED, BE SURE IT IS SECURE AND PROTECTED FROM CORROSION SINCE IT IS THE OPERATING GROUND FOR THE PUMP. CHECK SERVICE LITERATURE (EVTM, ETC.) FOR GROUND LOCATIONS.

WARNING

ALL SOLDERING AND HEAT SHRINKING MUST BE COMPLETED AWAY FROM THE FUEL TANK AREA. USE A SOLDERING IRON ONLY FOR SOLDERING AND HEAT GUN ONLY FOR APPLYING SHRINK TUBING.

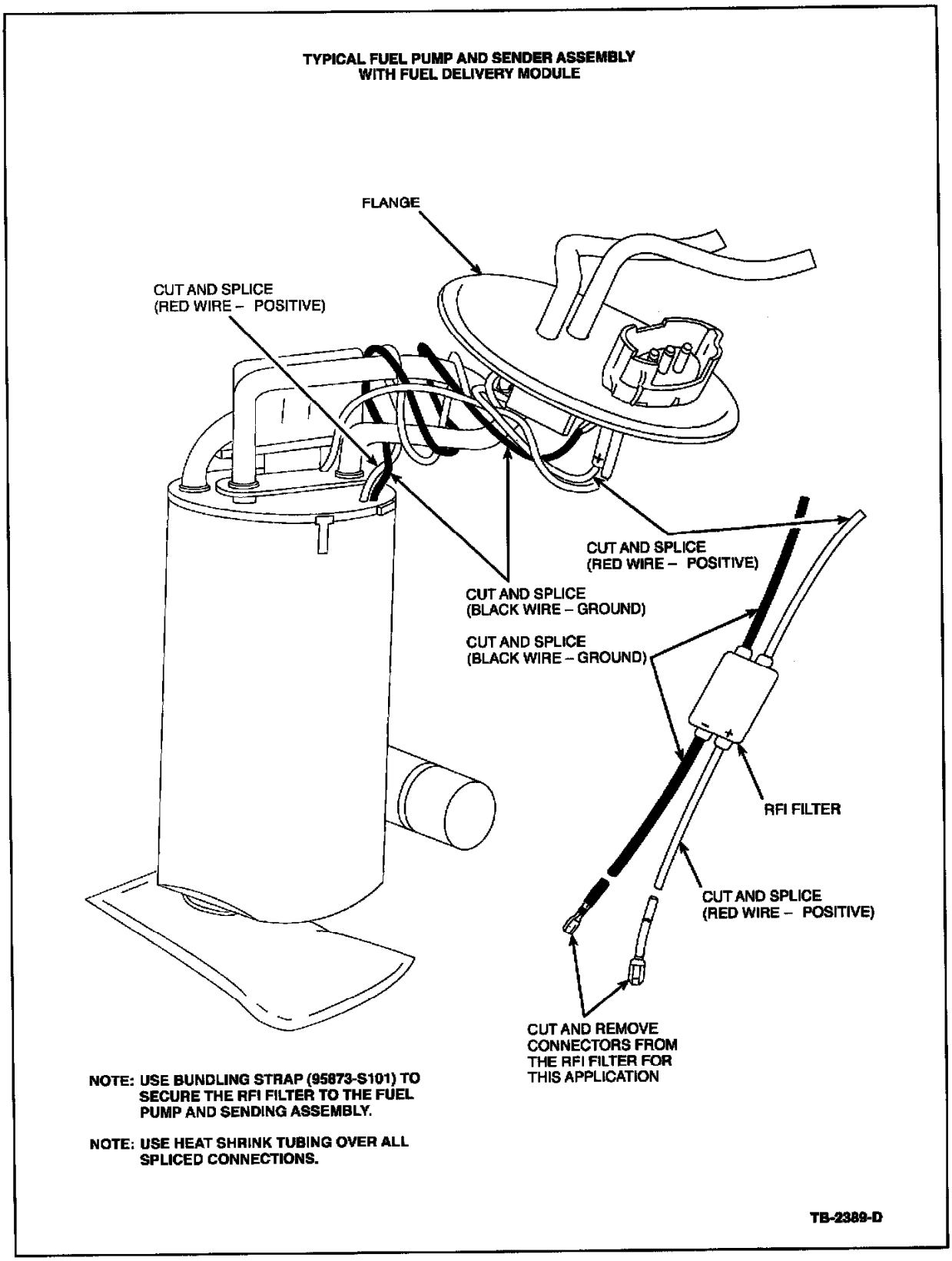

Figure 2

3. On light trucks and compact trucks with a fuel delivery module, cut the fuel pump wires to the fuel delivery module 50 mm (2") from the flange and discard the wires, Figure 2.

   a. Cut the connectors from the RFI filter and solder wires to the fuel delivery module (red to red and black to black). Use heat shrink tubing over soldering connections.

b. Solder wires from the RFI filter to the flange wires (red to red and black to black). Use heat shrink tubing over soldered connections.

NOTE:
HEAT SHRINK TUBING MUST BE USED OVER ALL SOLDERED CONNECTIONS MADE PRIOR TO THIS TSB. USE SUFFICIENT TUBING (ABOUT 50 mm (2")) OF THE SPECIFIED TYPE TO ENTIRELY COVER EACH SOLDERED CONNECTION AND SHRINK APPROPRIATELY TO PREVENT EXPOSURE OF THE CONNECTIONS.

NOTE:
FOR SOME VEHICLES WITH EXTREMELY LONG FUEL PUMP GROUND WIRE CIRCUITS, IT MAY BE NECESSARY TO SHORTEN THE WIRE TO A POINT CLOSE TO THE FUEL TANK IF THE GROUND IS MOVED, BE SURE IT IS SECURE AND PROTECTED FROM CORROSION. SINCE IT IS THE OPERATING GROUND FOR THE PUMP. CHECK SERVICE LITERATURE (EVTM, ETC.) FOR GROUND LOCATIONS.

WARNING
ALL SOLDERING AND HEAT SHRINKING MUST BE COMPLETED AWAY FROM THE FUEL TANK AREA. USE A SOLDERING IRON ONLY FOR SOLDERING AND HEAT GUN ONLY FOR APPLYING SHRINK TUBING.

4. Secure the RFI filter to the fuel pump and sender assembly with a Bundling Strap (95873-S101) to prevent rattling in the tank, Figures 1 and 2.

5. Reinstall the fuel pump sender assembly into the fuel tank.

CAUTION
INSTALL NEW GASKETS WHEN REINSTALLING SENDER TO PREVENT LEAKS. REFER TO THE PARTS CATALOG FOR PROPER APPLICATIONS.

6. Check the appropriate Electrical and vacuum troubleshooting manual (EVTM) (or other Service Literature) for the location of the fuel pump pump ground. If ground is more than 0.9m (3') from the tank, cut wire and ground fuel pump end within 0.9m (3') of the tank to prevent ground wire from acting as an antenna. Be sure ground is secure and protected from corrosion since it is the operating ground for the fuel pump.

7. Install the fuel tank in the vehicle as outlined in the appropriate Service or Workshop manual.

PART NUMBER	PART NAME
F1PZ-18B925-A	Radio Frequency Interference (RFI) Filter
95873-S101	Bundling Strap
F5AZ-14A099-AA	Heat Shrink Tubing

PARTS BLOCK

OTHER APPLICABLE ARTICLES: 90-18-3, 91-17-5
SUPERSEDES: 99-12-9
WARRANTY STATUS: Eligible Under The Provisions of Bumper To Bumper Warranty Coverage

010703AA	Diagnose And Install RFI Filter (1990-1995 Thunderbird Super Coupe)	2.1 Hrs.
010703AB	Diagnose And Install RFI Filter (1991-1993 Thunderbird/Cougar 5.0L HO)	2.1 Hrs.
010703AC	Diagnose And Install RFI Filter (1994-1997 Thunderbird/Cougar 4.6L MFI)	2.1 Hrs.
010703AD	Diagnose And Install RFI Filter (1990-1997 Thunderbird/Cougar 3.8L)	1.9 Hrs.
010703BA	Diagnose And Install RFI Filter (1990-1995 Taurus/Sable)	1.4 Hrs.
010703BB	Diagnose And Install RFI Filter (1996-1999 Taurus/Sable)	1.4 Hrs.
010703BC	Diagnose And Install RFI Filter (2001 Taurus/Sable)	1.4 Hrs.
010703CA	Diagnose And Install RFI Filter (1992-1997 Crown Victoria/Grand Marquis, Town Car)	1.2 Hrs.

010703CB	Diagnose And Install RFI Filter (1990-1991 Crown Victoria/Grand Marquis, Town Car)	1.6 Hrs.
010703CC	Diagnose And Install RFI Filter (1998-2001 Town Car)	1.9 Hrs.
010703CD	Diagnose And Install RFI Filter (1998-2001 Crown Victoria/Grand Marquis)	2.2 Hrs.
010703DA	Diagnose And Install RFI Filter (1990-1999 Mustang)	1.7 Hrs.
010703EA	Diagnose And Install RFI Filter (1990-1994 Tempo/Topaz)	1.6 Hrs.
010703FA	Diagnose And Install RFI Filter (1990-1992 Mark VII)	1.5 Hrs.
010703FB	Diagnose And Install RFI Filter (1997-1998 Mark VIII LSC)	2.0 Hrs.
010703FC	Diagnose And Install RFI Filter (1997-1998 Mark VIII Base)	2.5 Hrs.
010703GA	Diagnose And Install RFI Filter (1990-1994 Continental)	1.5 Hrs.
010703GB	Diagnose And Install RFI Filter (1995-1999 Continental)	1.5 Hrs.
010703HA	Diagnose And Install RFI Filter (1990 Escort)	1.6 Hrs.
010703HB	Diagnose And Install RFI Filter (1991-1996 Escort/Tracer)	0.8 Hr.
010703HC	Diagnose And Install RFI Filter (1997-1999 Escort/Tracer)	1.6 Hrs.
010703JA	Diagnose And Install RFI Filter (1997 Contour/Mystique)	0.8 Hr.
010703JB	Diagnose And Install RFI Filter (1998-1999 Contour/Mystique)	1.8 Hrs.
010703KA	Diagnose And Install RFI Filter (1990-1992 Probe)	0.8 Hr.
010703KB	Diagnose And Install RFI Filter (1993-1997 Probe)	1.8 Hrs.
010703LB	Diagnose And Install RFI Filter (1990-1991 Econoline - With Dual Tanks (Rear))	1.5 Hrs.
010703LC	Diagnose And Install RFI Filter (1992-2001 Econoline)	1.6 Hrs.
010703LF	Diagnose And Install RFI Filter (1990-1991 Econoline - With Dual Tanks (Front))	1.6 Hrs.
010703LT	Diagnose And Install RFI Filter (1990-1991 Econoline - With Dual Tanks (Both))	2.6 Hrs.
010703L	Diagnose And Install RFI Filter (1990-1991 Econoline - Single Tank)	1.6 Hrs.
010703MA	Diagnose And Install RFI Filter (1990-1996 Bronco)	2.0 Hrs.
010703NA	Diagnose And Install RFI Filter (1991-1994 Explorer)	1.8 Hrs.
010703NB	Diagnose And Install RFI Filter (1995-2001 Explorer)	1.5 Hrs.
010703NC	Diagnose And Install RFI Filter (1997-2001 Mountaineer)	1.5 Hrs.
010703PA	Diagnose And Install RFI Filter (1995-2001 Windstar)	1.4 Hrs.
010703RA	Diagnose And Install RFI Filter (1993-2001 Villager)	1.9 Hrs.
010703SA	Diagnose And Install RFI Filter (1997-2001 Expedition)	1.7 Hrs.
010703SB	Diagnose And Install RFI Filter (1998-2001 Navigator)	1.7 Hrs.
010703TA	Diagnose And Install RFI Filter (1990-1997 Ranger Standard Cab)	1.3 Hrs.
010703TB	Diagnose And Install RFI Filter (1990-1997 Ranger Super Cab)	1.8 Hrs.
010703TC	Diagnose And Install RFI Filter (1998-2001 Ranger 4X2)	1.6 Hrs.
010703TD	Diagnose And Install RFI Filter (1998-2001 Ranger 4X4)	1.8 Hrs.
010703VA	Diagnose And Install RFI Filter (1990-1997 Aerostar)	1.5 Hrs.
010703WA	Diagnose And Install RFI Filter (1990 Bronco II)	1.9 Hrs.
010703XB	Diagnose And Install RFI Filter (1990-1996 F-150/250/350/Super Duty (Rear) And 1997 F-350/Super Duty (Rear))	1.4 Hrs.
010703XC	Diagnose And Install RFI Filter (2000-2001 Excursion)	1.6 Hrs.
010703XF	Diagnose And Install RFI Filter (1990-1996 F-150/250/350/Super Duty (Front) And 1997 F-350/Super Duty (Front))	1.3 Hrs.
010703XL	Diagnose And Install RFI Filter (2001 Escape)	0.8 Hrs.
010703XT	Diagnose And Install RFI Filter (1990-1996 F-150/250/350/Super Duty (Both) And 1997 F-350/Super Duty (Both))	2.1 Hrs.
010703X	Diagnose And Install RFI Filter (1999-2001 Super Duty F-Series)	1.6 Hrs.

OPERATION/DESCRIPTION/TIME

BASIC PART NO.	CONDITION CODE
18B925	42

DEALER CODING

OASIS CODES: 205000, 207000, 404000, 702000, 702300

Technical Service Bulletin # **02-16-4** Date: **020819**

Audio System - Whining/Buzzing Noise From Speakers

Article No.
02-16-4

08/19/02

^ FUEL SYSTEM - FUEL PUMP "WHINING"/"BUZZING" NOISE COMES THROUGH ENTERTAINMENT OR TWO-WAY RADIO SPEAKER

^ RADIO - ENTERTAINMENT OR TWO-WAY COMMUNICATION - "WHINING"/"BUZZING" NOISE IN SPEAKERS CAUSED BY FUEL PUMP

^ NOISE - "WHINING"/"BUZZING" - COMES THROUGH SPEAKERS OF ENTERTAINMENT OR TWO-WAY RADIO

FORD:
1990-1994 TEMPO
1990-1997 ESCORT, PROBE, THUNDERBIRD
1990-1998 MUSTANG
1990-1999 TAURUS
1990-2002 CROWN VICTORIA
1997-1999 CONTOUR
2001 TAURUS
1990 BRONCO II
1990-1996 BRONCO
1990-1997 AEROSTAR, F SUPER DUTY, F-250 HD, F-350
1990-1999 F-250 LD
1990-2002 ECONOLINE, F-150, RANGER
1991-2002 EXPLORER
1995-2002 WINDSTAR
1997-2003 EXPEDITION
1999-2002 SUPER DUTY F SERIES
2000-2002 EXCURSION, EXPLORER SPORT TRAC, EXPLORER SPORT
2001-2002 ESCAPE

LINCOLN:
1990-1992 MARK VII
1990-1994 CONTINENTAL
1990-2002 TOWN CAR
1998-2003 NAVIGATOR
2002 BLACKWOOD

MERCURY:
1990-1994 TOPAZ
1990-1997 COUGAR
1990-1999 SABLE
1990-2002 GRAND MARQUIS
1991-1997 TRACER
1997-1999 MYSTIQUE
2001 SABLE
1993-2002 VILLAGER
1997-2002 MOUNTAINEER

TSB 01-7-3 is being republished in its entirety to update the model year coverage and vehicle line coverage.

ISSUE

A "whining"/"buzzing" noise in the speakers of the entertainment radio or two-way radio on vehicles with an in-tank electric fuel pump may be caused by electrical noise from the fuel pump.

1993 Ford Probe L4-121 2.0L DOHC VIN A MFI

ACTION

Install an electronic noise Radio Frequency Interference (RFI) Filter (F1PZ-18B925-A) on the fuel pump inside the fuel tank. Refer to the following Test Procedure to confirm that the concern exists, then refer to the Service Procedure for repair details.

NOTE
IF THE VEHICLE HAS AN ELECTRONIC RETURNLESS FUEL SYSTEM, DO NOT INSTALL A RFI FILTER INLINE TO THE FUEL PUMP. ONLY VEHICLES WITH MECHANICAL RETURNLESS FUEL SYSTEMS (PRESSURE REGULATOR IN THE TANK), OR SYSTEMS WITH THE PRESSURE REGULATOR ON THE FUEL RAIL SHOULD BE APPROVED FOR THE RFI FILTER INSTALLATION.

NOTE
SOME LIGHT TRUCKS REQUIRE ONE (1) RFI FILTER FOR EACH IN-TANK ELECTRIC FUEL PUMP ON MULTI-TANK VEHICLES.

NOTE
THIS TSB DOES NOT INCLUDE TAURUS FLEXIBLE FUEL VEHICLES (FFVS) OR 1999 RANGER 3.0L FFVS.

TEST PROCEDURE

Fuel pump radio noise is relatively constant and changes only slightly with vehicle speed. If the frequency of the noise varies or the noise comes and goes with the vehicle speed, then it is not the fuel pump and this fix will not be effective. The following procedure will help determine if the fuel pump is the cause of the radio noise:

1. Turn on the radio before the key is turned on (assuming the radio will operate without the ignition key - you may need to put the ignition key in the Accessory position).

2. Turn the ignition key to the Run position (do not start the engine).

3. The fuel pump should run for about 1 second with the key in the Run position with the engine not running. Listen for noise in the radio. If noise is present while the pump is running and stops when the pump stops, then the noise is being generated by the pump and this procedure should help.

PART NUMBER	PART NAME
F1PZ-18B925-A	Radio Frequency Interference (RFI) Filter
95873-S101	Bundling Strap
F5AZ-14A099-AA	Heat Shrink Tubing

Parts Block

OTHER APPLICABLE ARTICLES: NONE

SUPERSEDES: 01-7-3

WARRANTY STATUS: Eligible Under The Provisions Of Bumper To Bumper Warranty Coverage

OPERATION	DESCRIPTION	TIME
021604AA	Diagnose And Install RFI Filter 1990-1997 Thunderbird/Cougar	2.1 Hrs.
021604BA	Diagnose And Install RFI Filter 1990-1999 And 2001 Taurus/Sable	1.4 Hrs.
021604CA	Diagnose And Install RFI Filter 1992-1997 Crown Victoria/Grand Marquis/Town Car	1.2 Hrs.
021604CB	Diagnose And Install RFI Filter 1990-1991 Crown Victoria/Grand Marquis/Town Car	1.6 Hrs.
021604CC	Diagnose And Install RFI	2.2 Hrs.

	Filter 1998-2002 Crown Victoria/Grand Marquis	
021604DA	Diagnose And Install RFI Filter 1998-2002 Town Car	1.9 Hrs.
021604EA	Diagnose And Install RFI Filter 1990-1998 Mustang	1.7 Hrs.
021604FA	Diagnose And Install RFI Filter 1990-1998 Mustang	1.6 Hrs.
021604GA	Diagnose And Install RFI Filter 1990-1994 Continental	1.5 Hrs.
021604HA	Diagnose And Install RFI Filter 1990 Escort	1.6 Hrs.
021604IA	Diagnose And Install RFI Filter 1991-1996 Escort Tracer	0.8 Hr.
021604IB	Diagnose And Install RFI Filter 1997 Escort/Tracer	1.6 Hrs.
021604JA	Diagnose And Install RFI Filter 1997 Contour/Mystique	0.8 Hr.
021604JB	Diagnose And Install RFI Filter 1998-1999 Contour/Mystique	1.8 Hrs.
021604KA	Diagnose And Install RFI Filter 1990-1992 Mark VII	2.0 Hrs.
021604LA	Diagnose And Install RFI Filter 1990-1992 Probe	0.8 Hr.
021604LB	Diagnose And Install RFI Filter 1993-1997 Probe	1.8 Hrs.
021604MA	Diagnose And Install RFI Filter 1990-2002 Econoline Single Fuel Tank	1.6 Hrs.
021604MB	Diagnose And Install RFI Filter 1990-1991 Econoline Both Fuel Tanks	2.6 Hrs.
021604NA	Diagnose And Install RFI Filter 1990-1996 Bronco	2.0 Hrs.
0216040A	Diagnose And Install RFI Filter 1991-1994 Explorer	1.8 Hrs.
0216040B	Diagnose And Install RFI Filter 1995-2002 Explorer	1.5 Hrs.
021604PA	Diagnose And Install RFI Filter 1997-2002 Mountaineer	1.5 Hrs.
0216040A	Diagnose And Install RFI Filter 1995-2002 Windstar	1.4 Hrs.
021604RA	Diagnose And Install RFI Filter 1993-2002 Villager	1.9 Hrs.

021604SA	Diagnose And Install RFI Filter 1997-2003 Expedition/Navigator	1.7 Hrs.
021604TA	Diagnose And Install RFI Filter 1990-1997 Ranger Standard Cab	1.3 Hrs.
021604TB	Diagnose And Install RFI Filter 1990-1997 Ranger Super Cab	1.8 Hrs.
021604TC	Diagnose And Install RFI Filter 1998-2002 Ranger 4X4	1.8 Hrs.
021604TD	Diagnose And Install RFI Filter 1998-2002 Ranger 4X2	1.6 Hrs.
021604UA	Diagnose And Install RFI Filter 1990-1997 Aerostar	1.5 Hrs.
021604VA	Diagnose And Install RFI Filter 1990 Bronco II	1.9 Hrs.
021604WA	Diagnose And Install RFI Filter 1990-1996 F-150/250/350/Super Duty And 1997 F-350/Superduty Rear	1.4 Hrs.
021604WB	Diagnose And Install RFI Filter 1990-1996 F-150/250/350/Super Duty And 1997 F-350/Superduty Front	1.4 Hrs.
021604WC	Diagnose And Install RFI Filter 1990-1996 F-150/250/350/Super Duty And 1997 F-350/Superduty Both Tanks	2.1 Hrs.
021604WD	Diagnose And Install RFI Filter 1998-2002 F-150	1.6 Hrs.
021604XA	Diagnose And Install RFI Filter 2000-2002 Excursion	1.6 Hrs.
021604XB	Diagnose And Install RFI Filter 1999-2002 Super Duty F-Series: Front Tank	1.6 Hrs.
021604XC	Diagnose And Install RFI Filter 1999-2002 Super Duty F-Series: Rear Tank	1.5 Hrs.
021604XD	Diagnose And Install RFI Filter 1999-2002 Super Duty F-Series: Both Tanks	2.7 Hrs.
021604YA	Diagnose And Install RFI Filter 2001-2002 Escape	0.8 Hr.
021604ZA	Diagnose And Install RFI Filter 2002 Blackwood	1.9 Hrs.

DEALER CODING

1993 Ford Probe L4-121 2.0L DOHC VIN A MFI

BASIC PART NO.	CONDITION CODE
18B925	42

OASIS CODES: 205000, 207000, 404000, 702000, 702300

Service Procedure

1. Remove the fuel pump sender assembly from the fuel tank. Refer to the appropriate model year Workshop Manual for removal procedure.

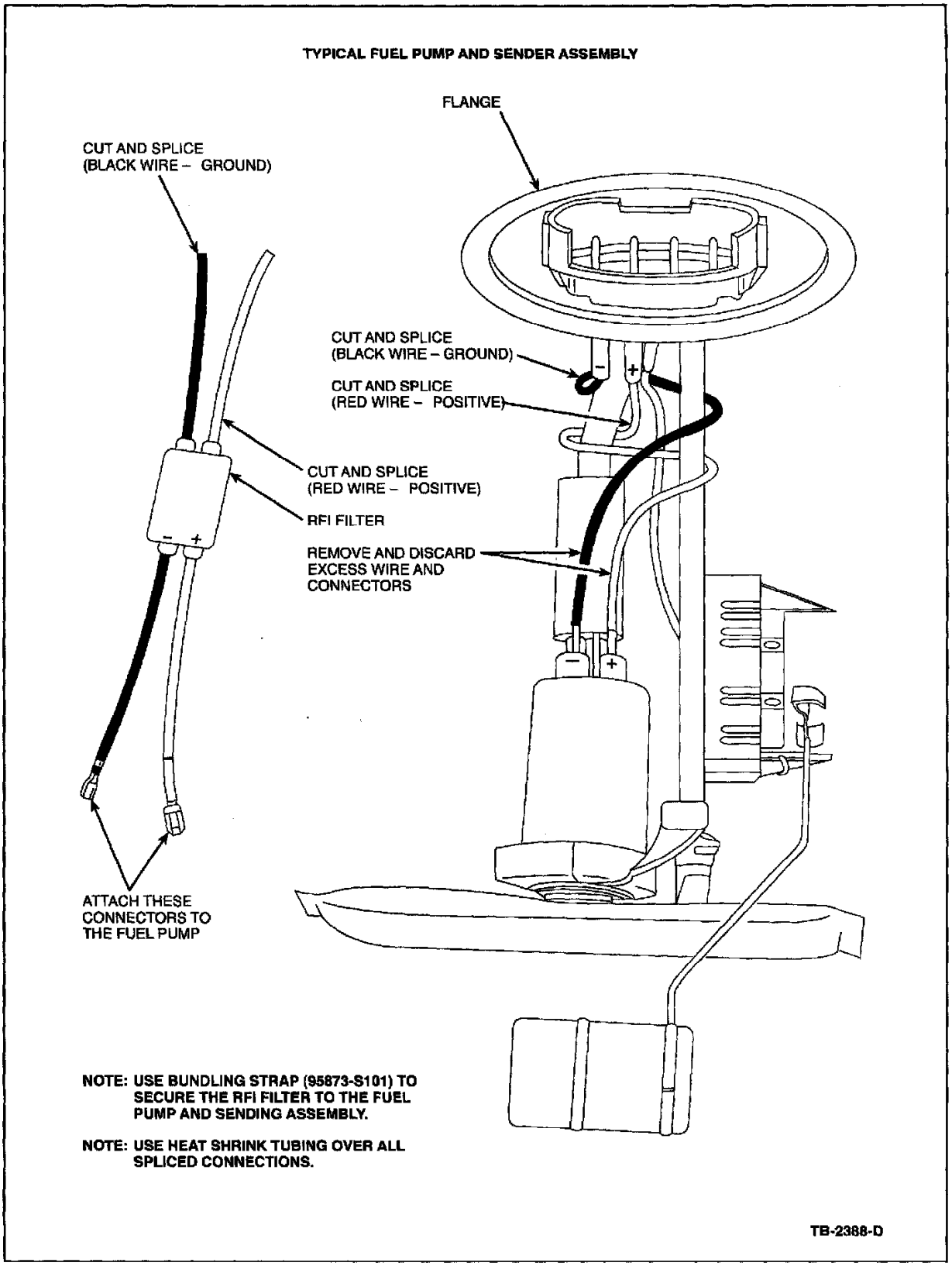

Figure 1

2. On vehicles without a fuel delivery module, remove the negative and positive connectors from the fuel pump, Figure 1.

   a. Cut the wires to the fuel pump 76 mm (3") from the flange of the fuel pump and discard the wires.

b. Connect the RFI filter connectors to the spade terminal on the fuel pump.

c. Cut and solder both the red and black wires of the RFI filter to the red and black wires of the flange. Use Heat Shrink Tubing (F5AZ-14A099-AA) over the solder connections.

NOTE

HEAT SHRINK TUBING MUST BE USED OVER ALL SOLDERED CONNECTIONS MADE PER THIS TSB. USE SUFFICIENT TUBING (ABOUT 50 mm (2 ")) OF THE SPECIFIED TYPE TO ENTIRELY COVER EACH SOLDERED CONNECTION AND SHRINK APPROPRIATELY TO PREVENT EXPOSURE OF THE CONNECTIONS.

NOTE

FOR SOME VEHICLES WITH EXTREMELY LONG FUEL PUMP GROUND WIRE CIRCUITS, IT MAY BE NECESSARY TO SHORTEN THE GROUND WIRE TO A POINT CLOSE TO THE FUEL TANK. IF THE GROUND IS MOVED, BE SURE IT IS SECURE AND PROTECTED FROM CORROSION SINCE IT IS THE OPERATING GROUND FOR THE PUMP. CHECK SERVICE LITERATURE (EVTM, ETC.) FOR GROUND LOCATIONS.

WARNING

ALL SOLDERING AND HEAT SHRINKING MUST BE COMPLETED AWAY FROM THE FUEL TANK AREA. USE A SOLDERING IRON ONLY FOR SOLDERING AND HEAT GUN ONLY FOR APPLYING SHRINK TUBING.

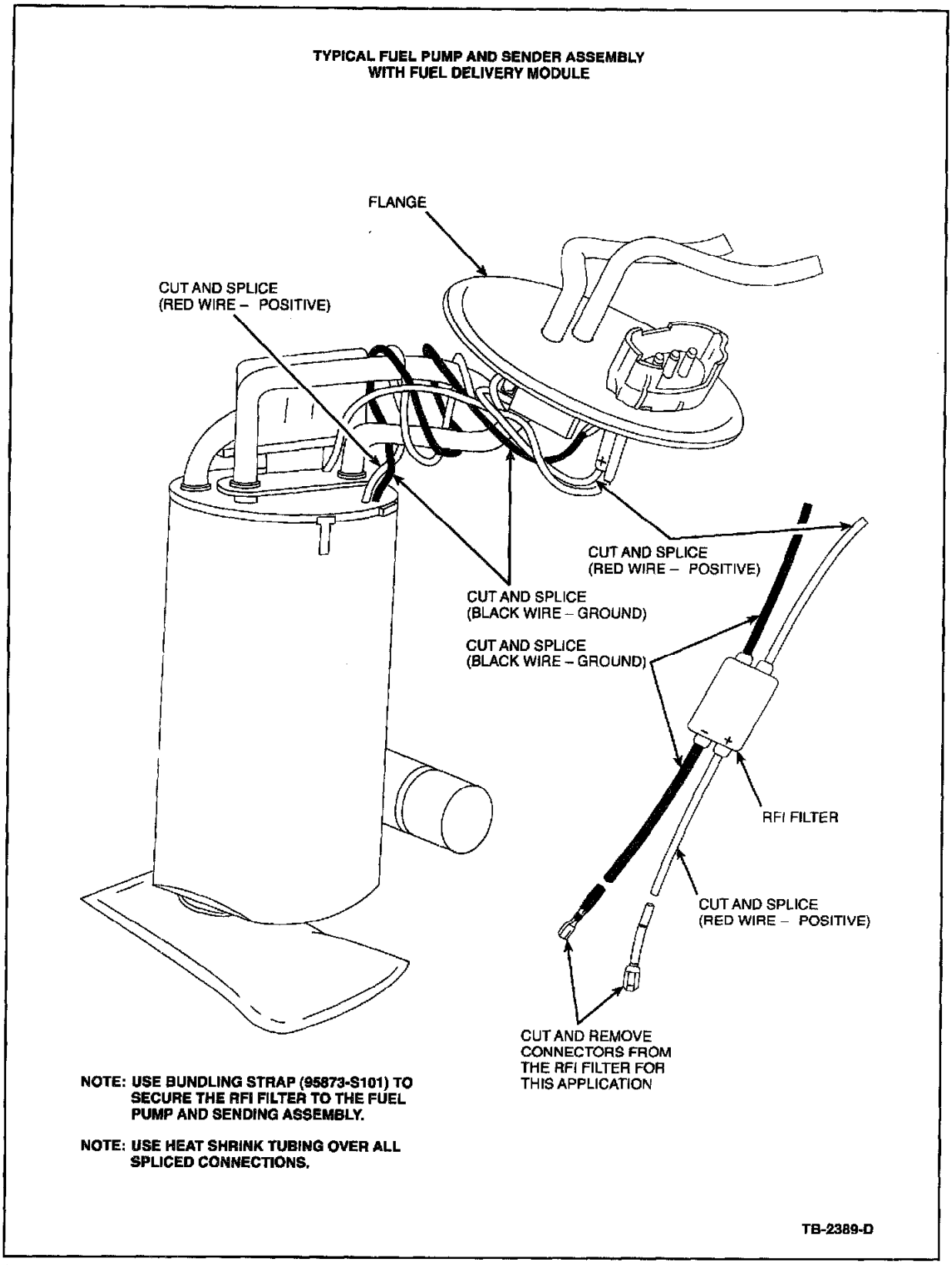

Figure 2

3. On light trucks and compact trucks with a fuel delivery module, cut the fuel pump wires to the fuel delivery module 50 mm (2") from the flange and discard the wires, Figure 2.

   a. Cut the connectors from the RFI filter and solder wires to the fuel delivery module (red to red and black to black). Use heat shrink tubing over solder connections.

   b. Solder wires from the RFI filter to the flange wires (red to red and black to black). Use heat shrink tubing over soldered connections.

NOTE

HEAT SHRINK TUBING MUST BE USED OVER ALL SOLDERED CONNECTIONS MADE PER THIS TSB. USE SUFFICIENT TUBING (ABOUT 50 mm (2 ")) OF THE SPECIFIED TYPE TO ENTIRELY COVER EACH SOLDERED CONNECTION AND SHRINK APPROPRIATELY TO PREVENT EXPOSURE OF THE CONNECTIONS.

NOTE

FOR SOME VEHICLES WITH EXTREMELY LONG FUEL PUMP GROUND WIRE CIRCUITS, IT MAY BE NECESSARY TO SHORTEN THE GROUND WIRE TO A POINT CLOSE TO THE FUEL TANK. IF THE GROUND IS MOVED, BE SURE IT IS SECURE AND PROTECTED FROM CORROSION SINCE IT IS THE OPERATING GROUND FOR THE PUMP. CHECK SERVICE LITERATURE (EVTM, ETC.) FOR GROUND LOCATIONS.

WARNING

ALL SOLDERING AND HEAT SHRINKING MUST BE COMPLETED AWAY FROM THE FUEL TANK AREA. USE A SOLDERING IRON ONLY FOR SOLDERING AND HEAT GUN ONLY FOR APPLYING SHRINK TUBING.

4. Secure the RFI filter to the fuel pump and sender assembly with a Bundling Strap (95873-S101) to prevent rattling in the tank, Figures 1 and 2.

5. Reinstall the fuel pump sender assembly into the fuel tank.

CAUTION

INSTALL NEW GASKETS WHEN REINSTALLING SENDER TO PREVENT LEAKS. REFER TO THE PARTS CATALOG FOR PROPER APPLICATIONS.

6. Check the appropriate Electrical and Vacuum Troubleshooting Manual (EVTM) (or other service literature) for the location of the fuel pump ground. If ground is more than 0.9m (3 ') from the tank, cut wire and ground fuel pump end within 0.9m (3 ') of the tank to prevent ground wire from acting as an antenna. Be sure ground is secure and protected from corrosion since it is the operating ground for the fuel pump.

7. Install the fuel tank in the vehicle as outlined in the appropriate Service or Workshop Manual.

Technical Service Bulletin # **93235**
Date: **931110**

Front Brakes - Grinding Noise

Article No.
93-23-5

11/10/93

^ BRAKES - FRONT - "GRINDING" NOISE ON MODERATE TO HEAVY BRAKING

^ NOISE - "GRINDING" SOUND FROM FRONT BRAKES DURING MODERATE TO HEAVY BRAKING

FORD:
1993 PROBE

ISSUE:
Front brake grinding noise may be heard on moderate-to-heavy braking. The concern occurs most often at ambient temperatures above 65~ F (18~ C). This condition may be caused by the brake pad material.

ACTION:
Replace the front brake pads with improved brake pads to eliminate the grinding noise. Refer to the 1993 Probe Service Manual, Section 06-03, pages 2-7, for service details.

PART NUMBER	PART NAME	CLASS
F32Z-2001-C	Front Brake Pads	AG

OTHER APPLICABLE ARTICLES: NONE
WARRANTY STATUS:
Eligible Under Bumper To Bumper Warranty Coverage

OPERATION	DESCRIPTION	TIME
932306A	Replace Front Disc Brake Pads	0.8 Hr.

DEALER CODING

BASIC PART NO.	CONDITION CODE
2001	56

OASIS CODES: 301000, 702100

Technical Service Bulletin # **9562** Date: **950327**

Brakes - Roughness During Application

1993 Ford Probe L4-121 2.0L DOHC VIN A MFI

Article No.
95-6-2

03/27/95

BRAKES - ROUGHNESS CONCERN DURING BRAKE

APPLICATION

FORD:
1982-95 CROWN VICTORIA, ESCORT, MUSTANG, THUNDERBIRD
1984-94 TEMPO
1986-95 TAURUS
1988-93 FESTIVA
1989-95 PROBE
1994-95 ASPIRE
1995 CONTOUR

LINCOLN-MERCURY:
1982-86 CAPRI
1982-87 LYNX
1982-95 CONTINENTAL, COUGAR, GRAND MARQUIS, TOWN CAR
1984-92 MARK VII
1984-94 TOPAZ
1986-95 SABLE
1987-89 TRACER
1991-94 CAPRI
1991-95 TRACER
1993-95 MARK VIII
1995 MYSTIQUE

MERKUR:
1985-88 XR4TI
1988-89 SCORPIO

ISSUE:
Early replacement of the brake components, rotors and pads due to brake roughness concern, is lowering customer's view of quality. The cause of brake roughness is due to small changes in braking torque when the brake is applied. The following are the major reasons for the brake torque variation:

^ Runout of disc rotor

^ Rusted rotor surface

^ Warped rotor due to improper wheel lug nut tightening (torque too high or uneven)

^ Varied rotor thickness around the disk

^ Transferred patches of lining material on the rotor surface

^ Uneven tire wear and balance

ACTION:
Diagnose brake roughness by referring to the following procedure for service details.

SERVICE PROCEDURE/DIAGNOSIS STEPS

NOTE:
BEGIN WITH STEP 1 AND FINISH WITH STEP 6.

1. Check the Condition of Tires and Their Balance

Sometimes the brake roughness concern is not brake roughness at all. In fact, some complaints are due to the out-of-round and out-of-balance tires or broken steel cord (for steel belted radial tires) in the tires. The effects of these problems show up at all conditions of driving, but may seem worse when braking. That fact can be used to correctly determine that the customer is not experiencing brake-caused roughness. If however, there is brake roughness in addition to tire problems, then both problems must be repaired. If the inspection shows that tires are contributing to roughness (vibration or roughness present in all driving conditions, not just braking) they should first be balanced and rotated using normal maintenance procedures then follow the steps below to correct the brake roughness.

2. Check the Wheel Lug Nut Tightening Torque

Uneven and/or out of specification torque on the wheel lug nuts will cause the brake rotors to warp. Up to 0.005 inch rotor runout can occur due to improper lug nut tightening. The first thing to check for is the consistency of torque of the lug nuts on each wheel. If the torque readings are not within 20% of each other, that gives an indication of a cause of the concern of brake roughness. Improper lug nut tightening can have the following order of effects:

1. Rotor runout

2. Rotor thickness variation

3. Brake torque variation

4. Brake roughness

Ultimately, the rotor may be damaged and must be resurfaced. Follow the procedure in the Service Manual for resurfacing the rotors. Proper torque must be used when a resurfaced or new rotor is installed. Use of a torque wrench is again stressed, or as an alternative, the Rotunda "ACCUTORQ" 164-R0314 or equivalent must be used. When installing a new rotor, do not machine the rotor on a bench lathe. Any surface contamination can be removed with grease solvents or with very light hand sanding. Refer to # 3, CHECK FOR RUST/CONTAMINATION...

3. Check for Rust/Contamination on Mounting Surfaces

Surface rust or contaminations on the wheel-to-rotor and rotor-to-hub flange surfaces should be cleaned with very light hand sanding. Use garnet paper 100A or aluminum oxide 150J grit. DO NOT USE HARSH, ABRASIVE TOOLS. If the cleaning is not done, it will contribute to the runout of the rotor when assembled, which will cause brake roughness later on.

Any removal of rust on the rotor braking surfaces using harsh abrasive tools is not approved by Ford. The on-car turning procedure is the only sanctioned method at this time to deal with repairing rusty rotors. Since the thickness of the rotors are manufactured to less than 0.0004 inch tolerance, using hand held tools on the rotor surfaces can not guarantee maintaining the tolerance. Concerns will occur of brake roughness with rotor thickness variation of 0.0008 inch or less on certain very sensitive vehicles.

4. Check for Runout of the Front Rotor on the Car and Front Hub Mount

Runout of the rotor mounted on car should not exceed 0.003 inch. With the wheel off, fasten the lug nuts back on to hold the rotor onto the hub. The fastening torque should not exceed 81 N.m (60 lb-ft) and should be even. With the dial indicator attached to the spindle, slowly rotate the rotor to get the total indicated runout. This value should not exceed the Total Indicated Runout (TIR) as specified in the appropriate Service Manual. If it exceeds specification, first index the rotor one (1) wheel stud at a time. If the readings still exceed 0.003 inch, then the hub face runout should be checked. Repeat the runout check procedure on the hub face. If the runout exceeds 0.002 inch, the hub must be replaced, otherwise the rotor must be resurfaced on the vehicle or replaced.

5. Check for Rear Brake Roughness

Except for the vehicles with separate drum in disc parking brake (e.g., Crown Victoria, Grand Marquis and Town Car) the rear brake can be actuated by actuating the parking brake. Attempt to slow down the vehicle from 48 km/h (30 mph) with the transmission in neutral using the parking brake. If roughness is present, then the rear brakes need to be serviced. If roughness is not present, then front brakes need servicing. To service the rear brakes follow the procedure above for servicing the front brakes.

6. Check for Proper Caliper Operation

Inspect the calipers for leaks and brake fluid contamination. Any leaks from the wheel cylinders and seals must be repaired per the Service Manual. Also, inspect for glazing of the brake pads which may indicate a seized caliper piston, frequent severe or unintentional brake dragging by the customer. Repair as specified in the Service Manual.

OTHER APPLICABLE ARTICLES: 92-12-4, 92-19-2, 92-4-3, 93-16-2, 93-26-2, 93-6-3, 94-25-1, 94-25-2, 95-6-4

WARRANTY STATUS: INFORMATION ONLY

OASIS CODES: 301000 Technical Service Bulletin # **9494** Date: **940504**

Steering Gear - Clunk/Knock Noise While Turning

Article No.
94-9-4

05/04/94

^ STEERING - "CLUNK/KNOCK" NOISE FROM STEERING WHILE TURNING - VEHICLES BUILT THROUGH 3/16/94

^ NOISE - "CLUNK/KNOCK" FROM STEERING WHILE TURNING - VEHICLES BUILT THROUGH 3/16/94

FORD:

1993 Ford Probe L4-121 2.0L DOHC VIN A MFI

1993-94 PROBE

ISSUE:
A "clunk/knock" noise may be heard from the steering rack assembly while turning the steering wheel from left to right. This may be caused by insufficient yoke plug (pinion) preload. Steering performance is unaffected.

ACTION:
If the noise is loud, remove the steering gear assembly and adjust pinion preload using the revised specification. Refer to the following procedure for service details.

1. Remove the steering gear from the vehicle. Refer to the appropriate model year Probe Service Manual, Section 11-02.

2. Secure the steering gear in a soft-jawed vise.

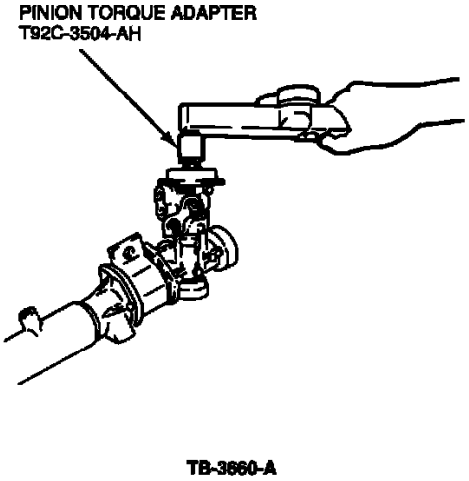

Figure 1

3. Measure the rack yoke preload using Pinion Torque Adapter T92C-3504-AH. The correct torque at the neutral position +/- 90~ should be 1.0-1.4 N-m (9-12 lb.in.). At any other position, the torque should be 1.6 N-m (15 lb.in.), Figure 1.

4. If the rack preload is not within specifications, loosen the yoke locking nut.

NOTE:
APPLY THREAD LOCKING COMPOUND TO THE EXPOSED THREADS OF THE YOKE PLUG.

5. Use Yoke Plug Adapter T81P-3504-U to tighten the yoke plug to 9.8 N-m (87 lb.in.), then loosen it. Tighten the yoke plug again to 5 N-m (39-48 lb.in.), then loosen it 20~.

CAUTION:
DO NOT ALLOW THE YOKE PLUG TO TURN.

6. Install the yoke locking nut. Use Yoke Locknut Wrench T88C-3504-KH to tighten the yoke locking nut while holding the yoke plug to 40-59 N-m (36-43 lb.ft.).

OTHER APPLICABLE ARTICLES: NONE
WARRANTY STATUS:
Eligible Under The Provisions Of Bumper To Bumper Warranty Coverage

OPERATION	DESCRIPTION	TIME
940904A	Adjust Steering Gear Pinion Pre-Load - Auto Trans	2.0 Hrs.
940904B	Adjust Steering Gear Pinion Pre-Load - Manual Trans	2.1 Hrs.

DEALER CODING

BASIC PART NO.	CONDITION CODE
3504	07

OASIS CODES: 303000, 702000, 702100, 790000

Technical Service Bulletin # **93227** Date: **931027**

Hydraulic Lash Adjusters - Metallic Ticking Noise

1993 Ford Probe L4-121 2.0L DOHC VIN A MFI

Article No.
93-22-7

10/27/93

^ ENGINE OIL SYSTEM - CONTAMINATION RESULTS IN "TICKING" NOISE FROM HYDRAULIC LASH ADJUSTERS AFTER HOT SOAK - 2.0L AND 2.5L VEHICLES BUILT BEFORE 7/28/93

^ NOISE - "TICKING" SOUND FROM HYDRAULIC LASH ADJUSTERS AFTER HOT SOAK - 2.0L AND 2.5L VEHICLES BUILT BEFORE 7/28/93

FORD:
1993 PROBE

ISSUE:
A metallic "ticking" noise from the engine valve hydraulic lash adjusters may occur after a hot soak. This noise may be heard under the following conditions:

^ When returning to idle speed after freeway driving

^ After a hot soak at idle speed just after restarting

This condition may be caused by the factory oil becoming contaminated and is usually noticed in the first 1000-3000 miles (1600-4800 km) of new vehicle operation. The contamination can cause the oil to have increased foaming characteristics.

ACTION:
Replace the engine oil and oil filter. Refer to the following service procedure.

NOTE:
THE FOLLOWING TWO SYMPTOMS ARE NORMAL AND REQUIRE NO CORRECTIVE ACTION: (1) "TICKING" NOISE FOR UP TO 3 SECONDS AFTER INITIAL START UP. (2) NOISE JUST AFTER OIL AND FILTER CHANGE. AIR IS PURGED OUT THROUGH NORMAL DRIVING.

1. Replace the engine oil and filter.

2. Be sure that the oil level is between "F" and "L" on the oil dipstick.

3. If the "ticking" noise is still present after replacing the oil and filter, run the engine for 8 minutes at 3000 rpm to remove any air trapped in the hydraulic lash adjusters.

PART NUMBER	PART NAME	CLASS
XO-5W30-QSP	Oil 5W30 (Pk./12)	V
F32Z-6731-A	Oil Filter - 2.5L	V
F12Z-6731-B	Oil Filter - 2.0L	V

Parts Block

OTHER APPLICABLE ARTICLES: NONE
WARRANTY STATUS:
Eligible Under Warranty Coverage Up To The First Scheduled Maintenance Interval (5000 Miles)

OPERATION	DESCRIPTION	TIME
932207A	Change Engine Oil and Filter	0.3 Hr.

DEALER CODING

BASIC PART NO.	CONDITION CODE
6675	49

OASIS CODES:
401000, 497000, 499000, 702000

Technical Service Bulletin # **96213** Date: **961007**

Engine - Noise/Misses/Stalls/Runs Rough/Low Power

Article No.
96-21-3

10/07/96

1993 Ford Probe L4-121 2.0L DOHC VIN A MFI

^ MISSES - STALLS - RUNS ROUGH - REDUCED POWER - METALLIC "TICKING" NOISE FROM HYDRAULIC LASH ADJUSTERS - 2.0L ENGINES BUILT THROUGH 5/17/96

^ REDUCED POWER - MISSES - STALLS - RUNS ROUGH - METALLIC "TICKING" NOISE FROM HYDRAULIC LASH ADJUSTERS - 2.0L ENGINES BUILT THROUGH 5/17/96

^ RUNS ROUGH - STALLS - MISSES - REDUCED POWER - METALLIC "TICKING" NOISE FROM HYDRAULIC LASH ADJUSTERS - 2.0L ENGINES BUILT THROUGH 5/17/96

^ STALLS - RUNS ROUGH - MISSES - REDUCED POWER - METALLIC "TICKING" NOISE FROM HYDRAULIC LASH ADJUSTERS - 2.0L ENGINES BUILT THROUGH 5/17/96

^ ENGINE - METALLIC "TICKING" NOISE FROM HYDRAULIC LASH ADJUSTERS - STALLS, RUNS ROUGH, MISSES AND/OR LACKS POWER - 2.0L ENGINES BUILT THROUGH 5/17/96

^ NOISE - METALLIC "TICKING" NOISE FROM HYDRAULIC LASH ADJUSTERS - STALLS, RUNS ROUGH, MISSES AND/OR LACKS POWER - 2.0L ENGINES BUILT THROUGH 5/17/96

FORD:
1993-96 PROBE

This TSB article is being republished in its entirety to revise the service procedure and include the latest level parts.

ISSUE:
A metallic "ticking" noise may be heard at idle and may be accompanied by concerns of stalling, rough running, missing and/or reduced power. This may be caused by an uneven wear pattern on the oil pump control plunger resulting in air entrapment within the lubrication system causing the hydraulic lash adjusters to bleed down. The oil pump plunger also can stick, causing the hydraulic lash adjusters to pump up and the cylinder head valves to stay open.

ACTION:
Replace the oil pump. The revised Oil Pump (F72Z-6600-AA) has an improved oil pump plunger to reduce the possibility of air entrapment within the oil pump. Refer to the following Service Procedure for details.

SERVICE PROCEDURE

LASH ADJUSTER BLEED DOWN DIAGNOSTIC PROCEDURE

1. Run engine at 4000 rpms for 5 minutes or until oil temperature reaches 99°C (210°F).

2. Turn the engine off and let stand for 5 minutes.

3. Start the engine and let idle for 10 minutes.

4. If a metallic "ticking" noise is present, replace the oil pump. Refer to Section 03-01A of the appropriate year Probe Service Manual for replacement procedures.

5. If the "ticking" noise is not present, the oil pump is not the cause. Refer to the appropriate year Probe Service Manual for further diagnosis.

STICKING OIL PUMP PLUNGER DIAGNOSTIC PROCEDURE

1. With the engine cold, install Engine Oil Pressure Gauge (T73L-6600-A), or equivalent, and Transmission Test Adapter (D870-77000-A), or equivalent.

2. Start the engine and run at 3000 rpms while monitoring oil pressure.

3. The oil pressure should be below 689.5 kPa (100 psi) and drop to below 551.6 kPa (80 psi).

NOTE:
OIL PRESSURE WILL CONTINUE TO APPROACH NORMAL SPECIFICATION RANGE AS ENGINE TEMPERATURE INCREASES. OIL PRESSURE SPECIFICATION AT NORMAL OPERATING TEMPERATURE AND 3000 RPMS IS 393-489.5 kPa (57-71 PSI).

4. If oil pressure is above 689.5 kPa (100 psi) and remains high during warm up, replace the oil pump. Refer to Section 03-01A of the appropriate year Probe Service Manual for replacement procedures.

5. If oil pressure is within specifications, refer to the appropriate year Probe Service Manual for additional diagnostic procedures.

PART NUMBER	PART NAME
F72Z-6600-AA	Oil Pump

JE10-40355	Exhaust Manifold Nut
F2O1-40352	Exhaust Clamp
99946-0800	Nut
F42Z-6626-A	Oil Pump Inlet Tube Gasket
F32Z-6B652-A	O-Ring
F6AZ-19562-AA	Silicone Gasket And Sealant

OTHER APPLICABLE ARTICLES: NONE

SUPERSEDES: 94-12-7

WARRANTY STATUS: Eligible Under The Provisions Of Bumper To Bumper Warranty Coverage

OPERATION	DESCRIPTION	TIME
962103A	Replace Oil Pump	3.7 Hrs.

DEALER CODING

BASIC PART NO.	CONDITION CODE
6600	30

OASIS CODES: 497000, 499000, 607000, 607400, 607700, 608000, 608400, 608500, 609000, 609400, 609500, 613000, 613500, 614000, 614500

Technical Service Bulletin # **96232** Date: **961104**

Engine - Reduced Power On Acceleration

Article No.
96-23-2

11/04/96

REDUCED POWER - DURING ACCELERATION - 2.0L VEHICLES BUILT THROUGH 8/7/95

FORD:
1993-95 PROBE

ISSUE:
There may be reduced power during acceleration on some vehicles. This may be caused by a partially collapsed exhaust flex pipe that restricts exhaust flow.

ACTION:
Replace the exhaust flex pipe. The revised pipe is less restrictive. Refer to the following Service Procedure for details.

SERVICE PROCEDURE

1. Verify the concern by test driving the vehicle and checking performance while accelerating.

2. Remove the 14 mm nuts at the exhaust inlet pipe-to-catalyst flange.

3. Separate the catalyst from the inlet pipe. Refer to the appropriate year Probe Service Manual for details.

4. Using a small flashlight, look into the inlet pipe and inspect the flex webbing for deterioration, restrictions or collapsing. It necessary, replace the exhaust inlet pipe with a revised pipe.

PART NUMBER	PART NAME
F62Z-5246-E	Exhaust Flex Pipe
JE10-40355	Exhaust Manifold Nut
F201-40352	Exhaust clamp
99946-0800	Nut
F32Z-9450-A	Gasket
F02Z-5E241-A	Gasket - Exhaust Pipe-To-converter

OTHER APPLICABLE ARTICLES: NONE

WARRANTY STATUS: Eligible Under The Provisions Of Bumper To Bumper Warranty Coverage And Emissions Warranty Coverage

OPERATION	DESCRIPTION	TIME

962302A	Inspect And Replace Converter Inlet Pipe	0.6 Hr.

DEALER CODING

BASIC PART NO.	CONDITION CODE
5246	71

OASIS CODES: 403000, 614000, 614500, 614600

Technical Service Bulletin # **9774** Date: **970331**

A/T - 4EAT Harsh 1-2 Upshift

Article No.
97-7-4

03/31/97

TRANSAXLE - 4EAT - HARSH SHIFT FROM 1ST TO 2ND GEAR - 2.0L (1993 ONLY) AND 2.5L (1993-95) ENGINES

FORD:
1993-95 PROBE

This TSB article is being republished in its entirety to revise the service procedure and part number application.

ISSUE:
A harsh shift when shifting from 1st to 2nd gear, at normal operating temperatures, may be felt on some vehicles. This may be caused by a higher than normal control pressure passing through the main control separator plate.

ACTION:
Replace the main control separator plate, Torque Converter Clutch (TCC) solenoid and the line pressure solenoid with a revised plate and solenoids. Refer to the following Diagnostic and Repair Procedures for details.

PART NUMBER	PART NAME
F32Z-7A008-AA	Separator Plate (2.0L - 1993, 2.5L - 1994-95)
F32Z-7A008-BA	Separator Plate (2.5L - 1993)
F32Z-7G136-AA	Solenoid (2 Req'd.)
F32Z-7C155-AA	Separator Plate Gasket
F32Z-7C155-BA	Separator Plate Gasket
E92Z-7F396-A	Main Control Cover Gasket
XT-2-QDX	Motorcraft MERCON® Multi-Purpose Automatic Transmission Fluid (ATF)
99541-00407	O-Ring (2 Req'd.)

Parts Block

OTHER APPLICABLE ARTICLES: NONE

SUPERSEDES: 97-5-8

WARRANTY STATUS: Eligible Under The Provisions Of Bumper To Bumper Warranty Coverage

OPERATION	DESCRIPTION	TIME
970704A	Remove And Install Main Control, Replace Separator Plate, Torque Converter Clutch (TCC) Solenoid And Line Pressure Solenoid	1.9 Hrs.

DEALER CODING

BASIC PART NO.	CONDITION CODE
7A008	30

OASIS CODES: 501000, 504000

Diagnostic Procedure

NOTE:

BEFORE PERFORMING THE DIAGNOSTIC PROCEDURE, CHECK TO MAKE SURE THE ENGINE IS OPERATING PROPERLY. DRIVEABILITY CONCERNS CAN CAUSE THE TRANSAXLE TO SHIFT ERRATICALLY.

1. Check Throttle Position (TP) sensor by moving throttle from closed to wide open and monitoring voltage (normal is 0.5 volts at closed throttle). Test drive vehicle after TP sensor adjustment, if needed. If concern is resolved, return vehicle to owner. If concern is still present, proceed to the following Step 2.

2. Install gauge and check control pressure (refer to the appropriate year Probe Service Manual, Section 07-01B). Control pressure should be checked at idle and at stall speed with engine at normal operating temperature and gearshift selector in "D" range.

   ^ Control pressure at idle - 60-78 psi

   ^ Control pressure at stall speed - 161-172 psi

3. If control pressure is lower than specification at idle or stall speed, refer to the appropriate year Probe Service Manual, Section 07-01B, for further diagnosis.

4. If control pressure exceeds the specification at idle, refer to the appropriate year Probe Service Manual, Section 07-01B, for further diagnosis.

5. If control pressure is normal or slightly higher than specification at stall speed, refer to the Repair Procedure in this TSB article for replacement of the main control separator plate and TCC solenoid.

Repair Procedure

1. Clean and dry the exterior of the transaxle thoroughly before disassembly.

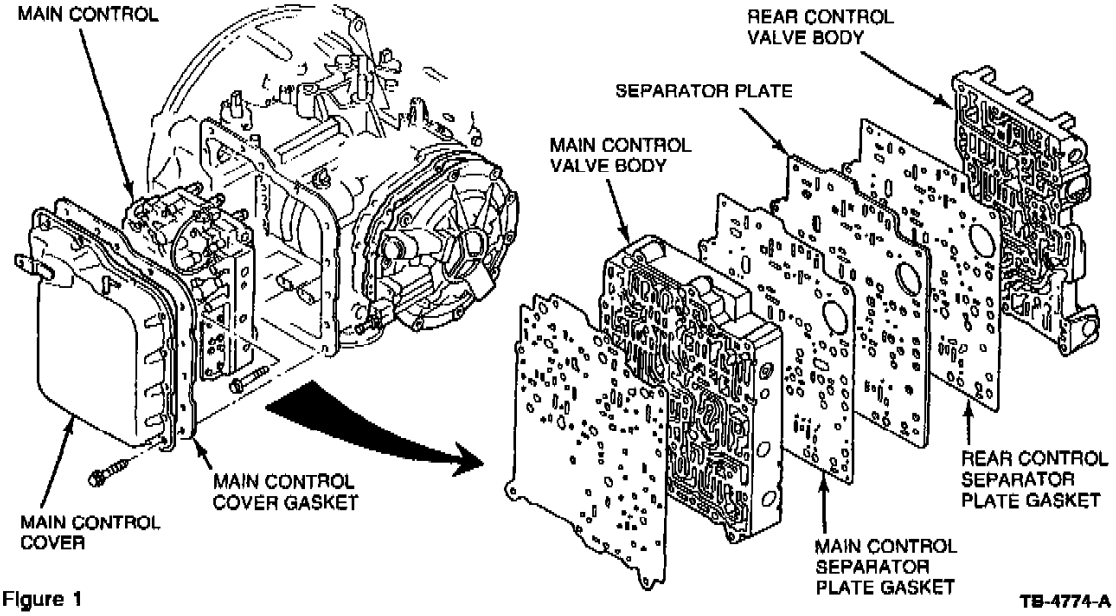

Figure 1

2. Remove drain plug and drain fluid. Remove main control cover and main control (Figure 1). Refer to the appropriate year Probe Service Manual, Section 07-01B, for removal procedure.

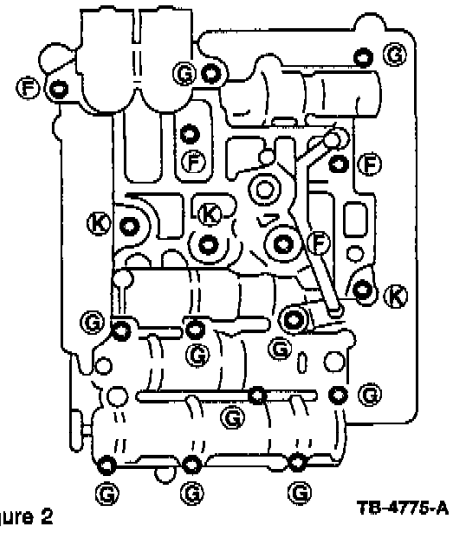

Figure 2

3. Place main control on a clean work table so that the rear control is facing upward (Figure 2).

NOTE:
CHECK THE VEHICLE BUILD DATE. IF VEHICLE WAS BUILT AFTER 1/3/95, SKIP THE FOLLOWING STEPS 4-13. THESE VEHICLES HAVE THE MODIFIED SEPARATOR PLATE.

4. Remove oil pipe, oil baffle, 2-3 shift solenoid and 3-4 shift solenoid.

NOTE:
THE MAIN CONTROL AND BOLTS HAVE LETTERS WHICH INDICATE THE PROPER POSITION.

5. Remove bolts F, G, and K as shown in Figure 2.

6. Carefully remove the rear control valve body and rear control separator plate gasket.

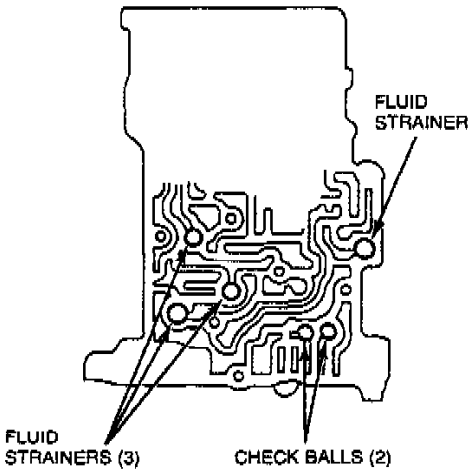

Figure 3 TB-4776-A

NOTE:
THE TWO (2) CHECK BALLS AND FOUR (4) STRAINERS ARE LOCATED UNDER THE CONTROL. USE CARE TO MAKE SURE STRAINERS AND CHECK BALLS ARE NOT MISPLACED (FIGURE 3).

7. Memorize location of the two (2) balls and the four (4) fluid strainers (Figure 3).

8. Lightly tap on separator plate surface to make sure check balls stay in the main control and then remove the separator plate and main control separator plate gasket.

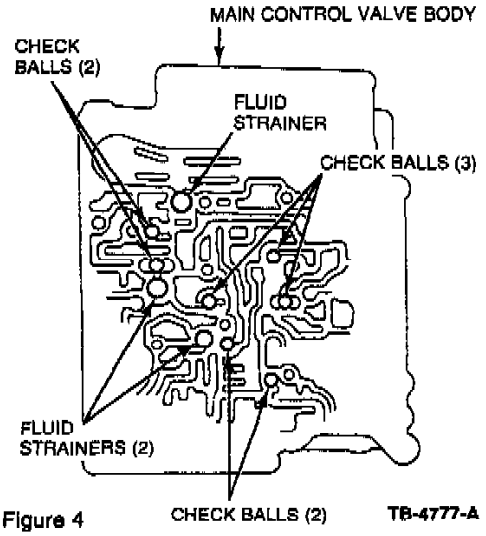

Figure 4 TB-4777-A

9. Clean the surface of the main control valve body and check the location of the seven (7) check balls and three (3) fluid strainers (Figure 4).

10. Install main control Separator Plate Gasket (F32Z-70155-AA), Separator Plate (-7A008-), and rear control Separator Plate Gasket (F32Z-70155-BA) to main control valve body.

11. Install the two (2) check balls and the four (4) fluid strainers in the same position as before disassembling (Figure 3).

12. Clean and install rear control valve body and torque bolts to 6.5-7.8 N.m (58-69 lb-in).

13. Replace 0-rings (99541-00407) on oil pipe (2 required) and install oil pipe, oil baffle, 2-3 shift solenoid and 3-4 shift solenoid and torque

bolts to 6.5-7.8 N.m (58-69 lb-in).

14. Turn main control over on bench so that the rear control is facing downward.

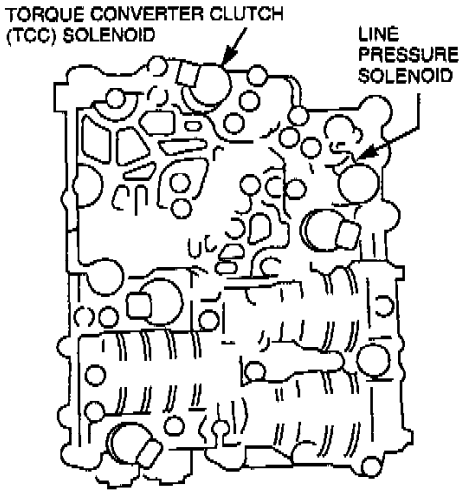

Figure 5 TB-4778-B

15. Remove line pressure and TCC solenoid and replace with revised Solenoids (F32Z-7G136-AA - 2 required) (Figure 5).

16. Install main control into transaxle and torque bolts to 6.5-7.8 N.m (58-69 lb-in).

NOTE:
THE SOLENOID CONNECTORS ARE COLOR CODED FOR PROPER INSTALLATION.

17. Install the six (6) connectors to the solenoids and the Transmission Fluid Temperature (TFT) sensor.

18. Replace the Main Control Cover Gasket (E92Z-7F396-A) and install main control cover.

19. Add 1.9L (2 quarts) of Motorcraft MERCON(R) Multi-Purpose Automatic Transmission Fluid (ATF) (XT-2-QDX). Bring transaxle to normal operating temperature and adjust fluid level.

20. Recheck control pressure at idle and stall speed. Road test vehicle to verify repair.Technical Service Bulletin # **92249** Date: **921118**

A/T - Harsh 3rd - 2nd Gear Downshift From 40 - 55 MPH

Article No.
92-24-9

11/18/92

TRANSMISSION - 4EAT - HARSH 3-2 DOWNSHIFTS FROM 40 TO 55 M.P.H. (64-88 KM/H) - VEHICLES WITH 2.0L ENGINE BUILT AFTER 4/16/92

FORD:
1993 PROBE

ISSUE:
A harsh 2-3 downshift may be experienced on vehicles equipped with the 2.0L engine at speeds of 40-55 M.P.H. (64-88 KM/H). The speed at which the concern may appear changes based on the load and throttle position.

ACTION:
Replace the Powertrain Control Module (PCM) with a revised (PCM), now available, which provides smoother 2-3 downshifts. Refer to Section 03-04A-25 of the 1993 Probe Service Manual for service details.

PART NUMBER	PART NAME	CLASS
F32Z-12A650-G	Powertrain Control Module (49 States)	B
F32Z-12A650-H	Powertrain Control Module (California)	W

Part Number/Name Chart

OTHER APPLICABLE ARTICLES:
NONE

1993 Ford Probe L4-121 2.0L DOHC VIN A MFI

WARRANTY STATUS:
Eligible Under Bumper To Bumper Warranty Coverage

OPERATION	DESCRIPTION	TIME
922409A	Replace - Powertrain Control Module (PCM) Includes road Test	0.5 Hr

DEALER CODING

BASIC PART NO.	CONDITION CODE
DRIVE	42

OASIS CODES:
502000

Technical Service Bulletin # **9733** Date: **970203**

MAF Sensor - MIL ON/DTC's Set/Driveability Concerns

Article No.
97-3-3

02/03/97

^ HESITATION - HESITATION ON ACCELERATION - REDUCED POWER - ROUGH IDLE - DIAGNOSTIC TROUBLE CODE (DTC) 181 OR P0171 MAY BE STORED IN MEMORY - VEHICLES BUILT THROUGH 11/19/95

^ MALFUNCTION INDICATOR LAMP (MIL) - DIAGNOSTIC TROUBLE CODE (DTC) 181 OR P0171 MAY BE STORED IN MEMORY - ROUGH IDLE - REDUCED POWER - HESITATION ON ACCELERATION - VEHICLES BUILT THROUGH 11/19/95

^ REDUCED POWER - HESITATION ON ACCELERATION - ROUGH IDLE - DIAGNOSTIC TROUBLE CODE (DTC) 181 OR P0171 MAY BE STORED IN MEMORY - VEHICLES BUILT THROUGH 11/19/95

^ ROUGH IDLE - REDUCED POWER - HESITATION ON ACCELERATION - DIAGNOSTIC TROUBLE CODE (DTC) 181 OR P0171 MAY BE STORED IN MEMORY - VEHICLES BUILT THROUGH 11/19/95

^ LAMP - MALFUNCTION INDICATOR LAMP (MIL) - DIAGNOSTIC TROUBLE CODE (DTC) 181 OR P0171 MAY BE STORED IN MEMORY - ROUGH IDLE - REDUCED POWER - HESITATION ON ACCELERATION - VEHICLES BUILT THROUGH 11/19/95

FORD:
1993-96 PROBE

ISSUE:
A hesitation on acceleration, reduced power, rough idle and/or a Malfunction Indicator Lamp (MIL) illumination with Diagnostic Trouble Code (DTC) 181 (1993-95 Probe) or P0171 (1996 Probe) may be evident on some vehicles. This may be caused by the Mass Air Flow (MAF) sensor.

ACTION:
Replace the MAF sensor with a revised MAF sensor. The revised MAF sensor should reduce the possibility of these concerns. Refer to the following Service Procedure for details.

SERVICE PROCEDURE

1. Check the vehicle for vacuum leaks and repair as required.

2. Verify the vehicle has the proper Positive Crankcase Ventilation (PCV) valve installed.

3. Run an EEC self test, record any DTCs and repair as required. If the concern is still present, proceed to the next Step.

4. Check the vehicle's fuel pressure. Refer to the appropriate year Probe Service Manual, Section 9B for details.

5. Check the MAF sensor voltage in Park or Neutral at 5,500 rpms using New Generation Star (NGS) Tester, Service Bay Diagnostic System (SBDS) or a breakout box. If voltage is less than 2.3 volts, proceed to the next Step.

6. Inspect the MAF sensor build date. If the sensor was built before 5K05 (1st digit = year, 2nd digit = month (A = January, B = February, etc.), 3rd and 4th digits = day of month), replace the sensor with a new sensor.

7. Clear all DTCs and rerun self test to verify repair.

PART NUMBER	PART NAME

1993 Ford Probe L4-121 2.0L DOHC VIN A MFI

F32Z-12B579-B	Mass Air Flow (MAF) Sensor (1993-95 Probe)
F62Z-12B579-CA	Mass Air Flow (MAF) Sensor (1996 Probe)

OTHER APPLICABLE ARTICLES: NONE

WARRANTY STATUS: Eligible Under The Provisions Of Bumper To Bumper Warranty Coverage And Emission Warranty Coverage

OPERATION	DESCRIPTION	TIME
970303A	Replace Mass Air Flow (MAF) Sensor	0.3 Hr.

DEALER CODING

BASIC PART NO.	CONDITION CODE
12B579	42

OASIS CODES: 206000, 607000, 607400, 607700, 608000, 608400, 610000, 610600, 611000, 611500, 614000, 614500, 616000, 698298

Technical Service Bulletin # **98-23-10** Date: **981123**

Engine - Lean Driveability Symptoms

Article No.
98-23-10

11/23/98

MASS AIR FLOW (MAF) - SENSOR
CONTAMINATION - SERVICE TIP

FORD:
1990-97 THUNDERBIRD
1990-99 MUSTANG, TAURUS SHO
1991-99 CROWN VICTORIA, ESCORT, TAURUS
1992-94 TEMPO
1993-97 PROBE
1995-99 CONTOUR

LINCOLN-MERCURY:
1990-97 COUGAR
1991-99 CONTINENTAL, GRAND MARQUIS, SABLE, TOWN CAR, TRACER
1992-94 TOPAZ
1993-98 MARK VIII
1995-99 MYSTIQUE

LIGHT TRUCK:
1990 BRONCO II
1990-97 AEROSTAR
1990-99 RANGER
1991-99 EXPLORER
1994-96 BRONCO
1994-97 F SUPER DUTY, F-250 HD
1994-99 ECONOLINE, F-150, F-250 LD, F-350
1995-99 WINDSTAR
1997-99 EXPEDITION, MOUNTAINEER
1998-99 NAVIGATOR
1999 F-250 HD, SUPER DUTY F SERIES

ISSUE
This TSB article is a diagnostic procedure to address vehicles that exhibit lean driveability symptoms and may or may not have any Diagnostic Trouble Codes (DTCs) stored in memory.

ACTION
Follow the diagnostic procedures described in the following Service Tip. The revised diagnostic procedure is a more accurate means of diagnosing the symptoms.

SERVICE TIP

MASS AIR FLOW (MAF) DISCUSSION

MAF sensors can get contaminated from a variety of sources: dirt, oil, silicon, spider webs, potting compound from the sensor itself, etc. When a MAF sensor gets contaminated, it skews the transfer function such that the sensor over-estimates air flow at idle (causes the fuel system to go rich) and under-estimates air flow at high air flows (causes fuel system to go lean). This means Long Term Fuel Trims will learn lean (negative) corrections at idle and learn rich (positive) corrections at higher air flows.

If vehicle is driven at Wide Open Throttle (WOT) or high loads, the fuel system normally goes open loop rich to provide maximum power. If the MAF sensor is contaminated, the fuel system will actually be lean because of under-estimated air flow. During open loop fuel operation, the vehicle applies Long Term Fuel Trim corrections that have been learned during closed loop operation. These corrections are often lean corrections learned at lower air flows. This combination of under-estimated air flow and lean fuel trim corrections can result in spark knock/detonation and lack of power concerns at WOT and high loads.

One of the indicators for diagnosing this condition is barometric pressure. Barometric pressure (BARO) is inferred by the Powertrain Control Module (PCM) software at part throttle and WOT (there is no actual BARO sensor on MAF-equipped vehicles, except for the 3.8L Supercharged engine). At high air flows, a contaminated MAF sensor will under-estimate air flow coming into the engine, hence the PCM infers that the vehicle is operating at a higher altitude. The BARO reading is stored in Keep Alive Memory (KAM) after it is updated. Other indicators are Long Term Fuel Trim and MAF voltage at idle.

NOTE

THE FOLLOWING PROCEDURE MAY ALSO BE USED TO DIAGNOSE VEHICLES THAT DO NOT HAVE FUEL SYSTEM/HO2S SENSOR DTCS.

Symptoms

^ Lack of Power

^ Spark Knock/Detonation

^ Buck/Jerk

^ Hesitation/Surge on Acceleration

^ Malfunction Indicator Lamp (MIL) Illuminated -

DTCs P0171, P0172, P0174, P0175 may be stored in memory

OBDII DTCs

^ P0171, P0174 (Fuel system lean, Bank 1 or 2)

^ P0172, P0175, (Fuel system rich, Bank 1 or 2)

^ P1130, P1131, P1132, (HO2S11 lack of switching, Bank 1)

^ P1150, P1151, P1152, (HO2S21 lack of switching, Bank 2)

OBDI DTCs

^ 181, 189 (Fuel system lean, Bank 1 or 2)

^ 179, 188 (Fuel system rich, Bank 1 or 2)

^ 171, 172, 173 (HO2S11 lack of switching, Bank 1)

^ 175, 176, 177 (HO2S21 lack of switching, Bank 2)

^ 184, 185 (MAF higher/lower than expected)

^ 186, 187 (Injector pulse width higher/lower than expected)

NOTE:

DO NOT DISCONNECT THE BATTERY. IT WILL ERASE KEEP ALIVE MEMORY AND RESET LONG TERM FUEL TRIM AND BARO TO THEIR STARTING/BASE VALUES. THE BARO PARAMETER IDENTIFICATION DISPLAY (PID) IS USED FOR THIS DIAGNOSTIC PROCEDURE. ALL OBDII APPLICATIONS HAVE THIS PID AVAILABLE. THERE ARE SOME OBDI VEHICLES THAT DO NOT HAVE THE BARO PID, FOR THESE VEHICLES OMIT THE BARO CHECK AND REFER ONLY TO STEPS 2, 3, AND 4 IN THE DIAGNOSTIC PROCEDURE.

BAROMETRIC PRESSURE REFERENCE			
Barometric Pressure (in. Hg.)	Barometric Pressure (kPa)	BARO/MAP PID (Hz)	Altitude above sea level (ft)
3.5	11.8	89.3	
5	16.9	92.8	
10	33.8	104.6	
15	50.7	117.0	14,000
20	67.5	129.6	10,000
21	70.9	132.5	9,000
22	74.3	135.4	8,000
23	77.7	138.3	7,000
24	81.1	141.1	6,000
25	84.4	144.0	5,000
26	87.8	146.9	4,000
27	91.2	149.8	3,000
28	94.6	152.8	2,000
29	97.9	155.8	1,000
30	101.3	158.9	0 (sea level)
31	104.7	162.0	
31.875	107.7	164.7	

1. Look at the BARO PID. Refer to the Barometric Pressure Reference Chart in this article. At sea level, BARO should read about 159 Hz (29.91 in. Hg). As a reference, Denver, Colorado at 1524 meters (5000 ft.) altitude should be about 144 Hz (24.88 in.Hg). Normal learned BARO variability is up to +/- 6 Hz (+/- 2 in. Hg.). If BARO indicates a higher altitude than you are not at (7 or more Hz lower than expected), you may have MAF contamination. If available, Service Bay Diagnostic System (SBDS) has a Manifold Absolute Pressure (MAP) sensor that can be used as a barometric pressure reference. Use "MAP/BARO" test under "Powertrain," "Testers and Meters." Ignore the hookup screen. Connect GP2 to the reference MAP on the following screen.

NOTE

REMEMBER THAT MOST WEATHER SERVICES REPORT A LOCAL BAROMETRIC PRESSURE THAT HAS BEEN CORRECTED TO SEA LEVEL. THE BARO PID, ON THE OTHER HAND, REPORTS THE ACTUAL BAROMETRIC PRESSURE FOR THE ALTITUDE THE VEHICLE IS BEING OPERATED IN. LOCAL WEATHER CONDITIONS (HIGH AND LOW PRESSURE AREAS) WILL CHANGE THE LOCAL BAROMETRIC PRESSURE BY SEVERAL INCHES OF MERCURY (+/- 3 Hz, +/- 1 in. Hg.).

NOTE

BARO IS UPDATED ONLY WHEN THE VEHICLE IS AT HIGH THROTTLE OPENINGS. THEREFORE, A VEHICLE WHICH IS DRIVEN DOWN FROM A HIGHER ALTITUDE MAY NOT HAVE HAD AN OPPORTUNITY TO UPDATE THE BARO VALUE IN KAM. IF YOU ARE NOT CONFIDENT THAT BARO HAS BEEN UPDATED, PERFORM THREE OR FOUR HEAVY, SUSTAINED ACCELERATIONS AT GREATER THAN HALF-THROTTLE TO ALLOW BARO TO UPDATE.

2. On a fully warmed up engine, look at Long Term Fuel Trim at idle, in Neutral, A/C off, (LONGFT1 and/or LONGFT2 PIDs). If it is more negative than -12%, the fuel system has learned lean corrections which may be due to the MAF sensor over-estimating air flow at idle. Note that both Banks 1 and 2 will exhibit negative corrections for 2-bank system. If only one bank of a 2-bank system has negative corrections, the MAF sensor is probably not contaminated.

3. On a fully warmed up engine, look at MAF voltage at idle, in Neutral, A/C off (MAF V PID). If it's 30% greater than the nominal MAF V voltage listed in the Powertrain Control/Emissions Diagnosis (PC/ED) Diagnostic Value Reference Charts for your vehicle, or greater than 1.1 volts as a rough guide, the MAF sensor is over-estimating air flow at idle.

4. If at least tow of the previous three steps are true, proceed to disconnect the MAF sensor connector. This puts the vehicle into Failure Mode and Effects Management (FMEM). In FMEM mode, air flow is inferred by using rpm and throttle position instead of reading the MAF sensor. (In addition, the BARO value is reset to a base/unlearned value.) If the lean driveability symptoms go away, the MAF sensor is probably contaminated and should be replaced. If the lean driveability symptoms do not go away, go to the PC/ED Service Manual for the appropriate diagnostics.

NOTE

DUE TO INCREASINGLY STRINGENT EMISSION/OBDII REQUIREMENTS, IT IS POSSIBLE FOR SOME VEHICLES WITH MAF SENSOR CONTAMINATION TO SET FUEL SYSTEM DTCs AND ILLUMINATE THE MIL WITH NO DRIVEABILITY CONCERNS. DISCONNECTING THE MAF ON THESE VEHICLES WILL, THEREFORE, PRODUCE NO IMPROVEMENTS IN DRIVEABILITY. IN THESE CASES, IF THE BARO, LONGFT1, LONGFT2, AND MAF V PIDs INDICATE THAT THE MAF IS CONTAMINATED, PROCEED TO REPLACE THE MAF SENSOR.

After replacing the MAF sensor, disconnect the vehicle battery (5 minutes, minimum to reset KAM, or on newer vehicles, use the "KAM Reset" feature on the New Generation Star (NGS) Tester and verify that the lean driveability symptoms are gone.

OTHER APPLICABLE ARTICLES:: NONE
WARRANTY STATUS: INFORMATION ONLY
OASIS CODES: 206000, 610000, 610500, 610600, 610700, 611000, 611500, 612000, 612500, 614000, 614500, 614600, 698298 Technical Service Bulletin # **962516** Date: **961202**

Axle Shafts - Fluid Leaks

1993 Ford Probe L4-121 2.0L DOHC VIN A MFI

Article No.
96-25-16

12/02/96

^ AXLE LEAKS - FLUID LEAKS FROM FRONT OF VEHICLE AT AXLE SHAFTS - NEW DESIGN REPLACEMENT CV JOINT BOOTS

^ AXLE SHAFTS - NEW DESIGN REPLACEMENT CV JOINT BOOTS - SERVICE TIP

FORD:
1988-93 FESTIVA
1989-96 PROBE

LINCOLN-MERCURY:
1988-89 TRACER

ISSUE:
Fluid may be leaking from the outer CV joint boot on some vehicles because of a tear, crack or wear. An alternate design CV replacement boot has been developed to simplify replacement of the CV boot.

APPLICATION CHART		
Model Year	Vehicle	Part Number
1989	Probe w/2.2L w/o Turbo, Built From 1/18/88	E92Z-3K331-A
1989	Probe w/2.2L w/o Turbo, Built Before 1/18/88	E92Z-3K331-B
1989	Probe w/2.2L w/Turbo	E92Z-3K331-C
1993	Probe w/2.5L	E92Z-3K331-C
1993-96	Probe w/2.0L	F32Z-3K331-A
1988-89	Tracer	E7GZ-3K331-A
1988-93	Festiva	E8BZ-3K331-A

ACTION:
For those instances where the shaft and joint do not require removal, use the new alternate design split boot. When the shaft and joint need removal, use either the original design non-split boot or the new alternate design split boot. Refer to the Application Chart for specific part numbers and the Instruction Sheet included with the CV boot for removal and installation procedures.

PART NUMBER	PART NAME
E92Z-3K331-A	CV Boot
E92Z-3K331-B	CV Boot
E92Z-3K331-C	CV Boot
F32Z-3K331-A	CV Boot
E7GZ-3K331-A	CV Boot
E8BZ-3K331-A	CV Boot

OTHER APPLICABLE ARTICLES: NONE

WARRANTY STATUS: Eligible Under The Provisions Of Base Warranty Coverage

OPERATION	DESCRIPTION	TIME
962516AT	Replace Both Outer CV Boots	0.7 Hr.
962516B	Replace One Outer CV Boot	0.4 Hr.

DEALER CODING

BASIC PART NO.	CONDITION CODE
3K331	77

OASIS CODES: 509000, 510000

Instrument Cluster Warning Lights - Dimly Lit

Article No.
93-24-10

11/24/93

^ LAMP - MALFUNCTION OF FOUR PIN LOW OIL LEVEL RELAY - VEHICLES BUILT AFTER 8/1/92 OR 1983-1993 VEHICLES THAT HAVE HAD SERVICE REPLACEMENT IGNITION SWITCHES AFTER 8/1/92

^ LAMPS - INSTRUMENT CLUSTER WARNING LIGHTS DIMLY LIT - VEHICLES BUILT AFTER 8/1/92 OR 1983-1993 VEHICLES THAT HAVE HAD SERVICE REPLACEMENT IGNITION SWITCHES AFTER 8/1/92

FORD:
1983 FAIRMONT
1983-89 CROWN VICTORIA, ESCORT
1983-93 MUSTANG, THUNDERBIRD
1983-94 PROBE
1984-86 LTD
1984-94 TEMPO

LINCOLN-MERCURY:
1983 LN7, ZEPHYR
1983-87 CONTINENTAL, LYNX
1983-89 GRAND MARQUIS, TOWN CAR
1983-93 COUGAR
1984-86 CAPRI, MARQUIS
1984-94 TOPAZ

LIGHT TRUCK:
1983-91 BRONCO
1983-93 ECONOLINE, F-150-350 SERIES, RANGER
1986-91 AEROSTAR
1991-93 EXPLORER

ISSUE:
The instrument cluster warning light(s) may be dimly lit or there may be a malfunction of the four pin low oil relay on vehicles so equipped. This could be due to the ignition switch.

ACTION:

PART NUMBER	PART NAME	CLASS
F29Z-11572-D	Ignition Switch (All Cars, 86-91 Aerostar)	B
F2TZ-11572-B	Ignition Switch (91-93 Explorer, 92-93 Ranger)	B
F2UZ-11572-C	Ignition Switch (92-94 Econoline)	B
F2TZ-11572-E	Ignition Switch (83-93 F-Series, 83-91 Bronco, 83-91 Ranger*)	B
F2TZ-11572-F	Ignition Switch (83-91 Econoline, 83-91 Ranger*)	B

(*) The 1983 to 1991 Ranger can use either switch.

If the vehicle displays the subject symptoms and meets the following conditions, replace the ignition switch. Refer to the appropriate Car or Light Truck Service Manual (Section 13-04 for 1983-1990 Cars, Section 11-04 for 1991-1993 Cars and Section 13-05 for 1983-1990 Light Trucks, Section 11-05 for 1991-1993 Light Trucks) for removal and installation procedures. Refer to the Parts Block in this article for correct parts usage.

CONDITIONS

^ The vehicle has 14401 wiring attached to the P2 terminal of the ignition switch. Refer to the wiring schematic and/or Electrical And Vacuum Troubleshooting Manual (EVTM) for the concern vehicle.

IGNITION SWITCH (ENGINEERING) PART NUMBERS	
PASSENGER CAR	LIGHT TRUCK
F29A-11572-DA (All)	F27A-11572-BB (91-93 Explorer, 92-93 Ranger) F2UA-11572-CA (92-94 Econoline) F29A-11572-DA (86-91 Aerostar) F2TA-11572-EA (83-93 F-Series, 83-91 Bronco, 83-91 Ranger*) F2TA-11572-FA (83-91 Econoline, 83-91 Ranger*)

(*) The 1983 to 1991 Ranger can use either switch.

^ The vehicle is equipped with one of the ignition switches identified in the Ignition Switch Part Number Chart.

NOTE:
THE SERVICE PART NUMBERS FOR THE REPLACEMENT IGNITION SWITCHES WILL HAVE THE SAME PART NUMBERS AS THOSE REPLACED. THE NEW SWITCH HAS BEEN IMPROVED TO CORRECT THE SUBJECT ISSUE.

OTHER APPLICABLE ARTICLES: NONE
WARRANTY STATUS:
Eligible Under The Provisions Of The Bumper To Bumper For 1992/93 Models, Basic Warranty Coverage For All Other Models Except Lincolns. Major Component Warranty Coverage For Lincolns

OPERATION	DESCRIPTION	TIME
932410A	Replace Ignition Switch - All Light and Compact Trucks	0.5 Hr.

DEALER CODING

BASIC PART NO.	CONDITION CODE
11572	X1

OASIS CODES: 201000, 201100, 206000

Technical Service Bulletin # **00-17-1** Date: **000821**

Ignition - Hard/No Start, Distributor Stator Replacement

Article NO.
00-17-1

08/21/00

^ HARD/NO START - 1993 PROBE WITH AUTOMATIC TRANSMISSION AND 2.0L ENGINE ONLY - NEW STATOR SERVICE PART RELEASED

^ NO SPARK - 1993 PROBE WITH AUTOMATIC TRANSMISSION AND 2.0L ENGINE ONLY - NEW STATOR SERVICE PART RELEASED

FORD:
1993 PROBE

ISSUE
A hard/no start or stall condition may occur on some vehicles after an engine hot soak event. This may be caused by an open in the distributor stator circuit. A new individual stator has been released for service. Previously the distributor was only serviced as an assembly.

ACTION
Replace stator assembly with a revised stator assembly. Refer to the following Service Procedure for details.

SERVICE PROCEDURE

REMOVAL

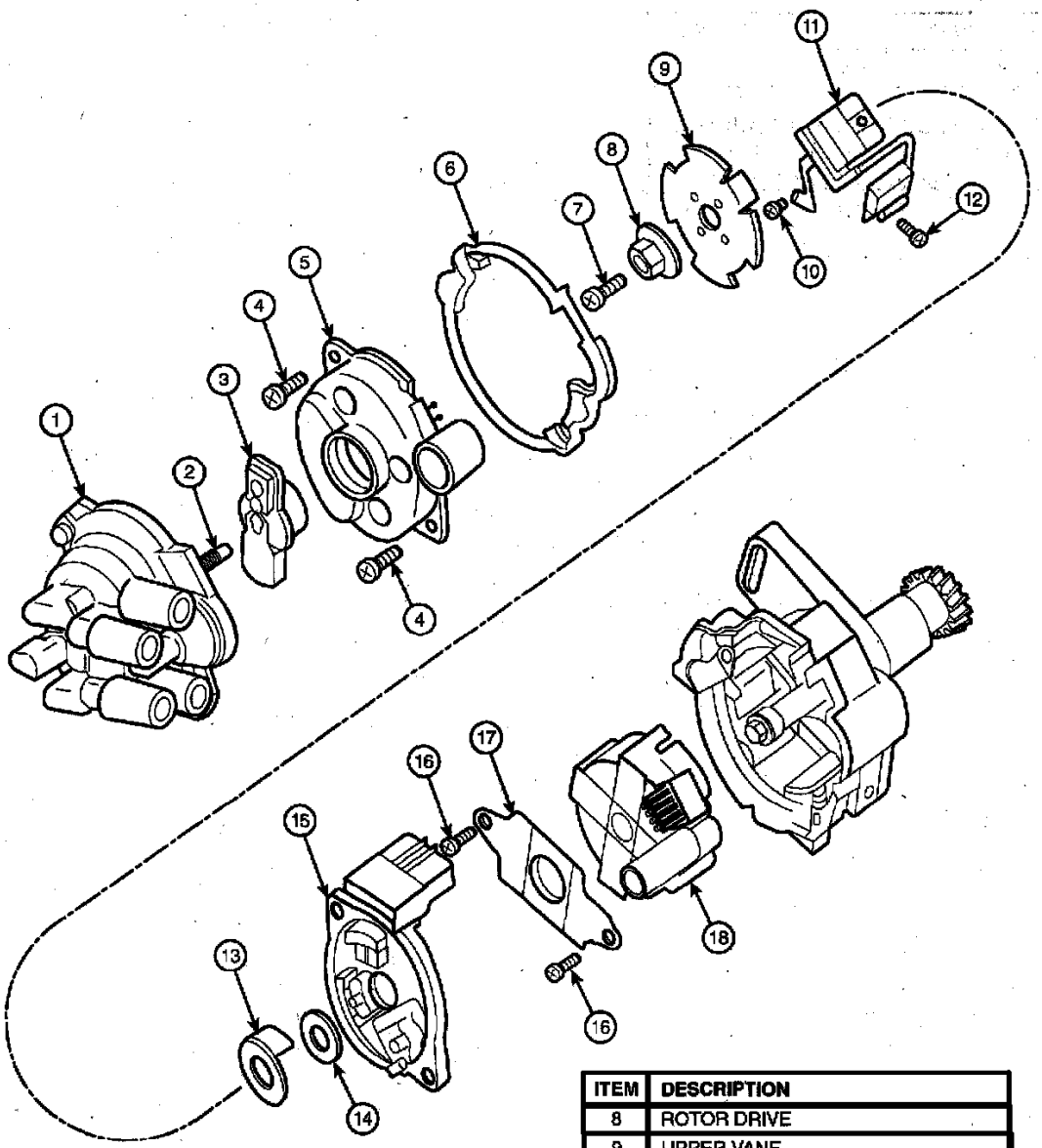

ITEM	DESCRIPTION
1	DISTRIBUTOR CAP ASSEMBLY
2	POINT ASSEMBLY (COIL OUTPUT)
3	ROTOR ASSEMBLY
4	STATOR COVER SCREWS (2)
5	STATOR COVER
6	GASKET
7	ARMATURE CENTER SCREW

ITEM	DESCRIPTION
8	ROTOR DRIVE
9	UPPER VANE
10	IGNITION COIL TERMINAL SCREW
11	IGNITION COIL CONNECTOR
12	IGNITION COIL CONNECTOR SCREW
13	LOWER VANE
14	SPACER
15	STATOR ASSEMBLY
16	RETAINING PLATE SCREWS (2)
17	RETAINING PLATE
18	IGNITION COIL

Figure 1

TB-6112-A

Refer to Figure 1.

1. Remove the engine air cleaner assembly. Refer to the Service Manual, Section 03-12A.

2. Remove the distributor cap, gasket, and rotor.

3. Remove the two (2) stator cover screws and stator cover.

4. Remove the armature shaft center screw and rotor drive.

CAUTION:

MAKE NOTE OF LOCATION OF VANES WHEN REMOVING. THEY WILL NEED TO BE INSTALLED IN THE SAME ORIENTATION.

5. Remove the upper and lower vanes and the spacer from the armature shaft.

6. Remove the condenser screw from the side of the distributor housing and remove the ignition coil terminal screw.

7. Remove and discard the stator assembly.

INSTALLATION

Refer to Figure 1.

1. Install the revised Stator Assembly (F32Z-12A112-AA)

2. Install the ignition coil connector assembly by applying a downward force to the connector. Make certain all three (3) terminals on the ignition coil connector mate properly on the ignition coil.

3. Install screw that attaches the terminal of the ignition coil connector to the stator assembly. Torque screw to 0.6-1.0 N.m (5-10 lb-in).

4. Install screw that attaches the condenser of the ignition coil connector to the distributor housing. Torque screw to 1.6-2.9 N.m (14-26 lb-in).

CAUTION:
CARE MUST BE TAKEN IN ORDER TO ASSURE PROPER ORIENTATION OF THE VANES TO THE ARMATURE SHAFT TO AVOID DAMAGING THE VANES.

5. Install the spacer and vanes onto the armature shaft.

6. Install the rotor drive.

7. Install armature shaft center screw. Torque screw to 4.7-5.1 N.m (41-46 lb-in).

NOTE:
VERIFY ROTATION OF ARMATURE SHAFT TO ASSURE THERE IS NO INTERFERENCE.

8. Install the stator cover and screws Torque screws to 4.7-5.1 N.m (41-46 lb-in).

9. Install distributor gasket, rotor, and cap. Torque distributor cap to 1.0-1.9 N.m (9-17 lb-in).

10. Install engine air cleaner. Refer to the Service Manual, Section 03-12A.

PART NUMBER	PART NAME
F32Z-12A112-AA	Stator Assembly

PART INFORMATION

OTHER APPLICABLE ARTICLES: NONE
WARRANTY STATUS: INFORMATION ONLY
OASIS CODES: 602300, 603300, 607000, 607400, 614000

Technical Service Bulletin # **95143** Date: **950717**

Headlamp Door - Erratic or intermittant Operation

Article No.
95-14-3

07/17/95

^ HEADLAMP DOOR - OPERATING CONTINUOUSLY OR INTERMITTENTLY CYCLES OPEN AND CLOSED - VEHICLES BUILT FROM 4/16/92 THROUGH 4/18/95

^ HEADLAMPS - HEADLAMP DOORS CONTINUOUSLY OR INTERMITTENTLY CYCLE OPEN AND CLOSED - VEHICLES BUILT FROM 4/16/92 THROUGH 4/18/95

FORD:
1993-95 PROBE

ISSUE:
Intermittent headlamp door operation may occur on some vehicles. The headlamp doors may continuously or intermittently cycle open and closed. This may be caused by water or other contaminants corroding the left or right headlamp retractor connector.

ACTION:
Inspect the connectors for corrosion and if present, replace the headlamp retractor motor. Refer to the following Service Procedure for details.

SERVICE PROCEDURE

1. Inspect the left and/or right headlamp retractor connectors for corrosion.

2. If corrosion exists, replace the headlamp retractor motor assembly. Refer to the appropriate Service Manual for details.

3. Remove any corrosion from the wiring harness side of the connector.

4. Apply Di-Electric Grease (D7AZ-19A331-A) to the connector.

PART NUMBER	PART NAME
F32Z-13A167-A	Headlamp Retractor Motor Assembly
F32Z-13A167-B	Headlamp Retractor Motor Assembly
D7AZ-19A331-A	Di-Electric Grease

Parts Block

OTHER APPLICABLE ARTICLES: NONE

WARRANTY STATUS:
Eligible Under The Provisions Of Bumper To Bumper Warranty Coverage

OPERATION	DESCRIPTION	TIME
951403A	Replace Left Headlamp Door Motor	0.9 Hr.
951403B	Replace Right Headlamp Door Motor	0.7 Hr.
951403C	Replace Both Headlamp Door Motors	1.2 Hrs.

DEALER CODING

BASIC PART NO.	CONDITION CODE
13A167	H2

OASIS CODES: 201000, 201200, 203000, 203200

Technical Service Bulletin # **96254** Date: **961202**

Air Bag System - Error Code 51Diagnostics/Repair

Article No.
96-25-4

12/02/96

^ RESTRAINT SYSTEM - AIR BAG MODULE - DIAGNOSTIC FAULT CODE 51 - IMPROVED DIAGNOSTICS AND REPAIR

^ AIR BAG - DIAGNOSTIC FAULT CODE 51 - IMPROVED DIAGNOSTICS AND REPAIR

FORD:
1993-97 PROBE

ISSUE:
Some vehicles may experience the air bag diagnostic light flashing. The air bag warning indicator may flash as follows:

^ Five (5) flashes, followed by

^ 1 second pause, followed by

^ a single flash, then

^ the sequence repeats itself.

This may be caused by a short-to-ground or intermittent short-to-ground in the air bag wiring. Air bag diagnostic monitors displaying Fault Code 51 are repeatedly being replaced without having first corrected a possible short-to-ground or intermittent short-to-ground in the system.

ACTION:
Deactivate the air bag system and check for and repair any possible shorts-to-ground in the air bag wiring. Replace Diagnostic Air Bag Monitor, reactivate the system and perform an air bag system prove-out. Refer to the following for detailed service procedures.

PART NUMBER	PART NAME
F32Z-14B056-A	Monitor Assembly
WT-5627-A	Heat Shrink Tubing
95873-S	Wiring Retainer
(Obtain Locally)	63/37 Rosin core Solder
(Obtain Locally)	Vinyl Electrical Tape
(Obtain Locally)	Cloth Duct Tape

OPERATION: USE ACTUAL TIME

OTHER APPLICABLE ARTICLES: NONE

WARRANTY STATUS: Eligible Under The Provisions Of Bumper To Bumper Warranty Coverage And Restraint Systems Coverage

DEALER CODING

BASIC PART NO.	CONDITION CODE
14B056	X1

OASIS CODES: 104000, 203200, 206000

General Information

The diagnostic monitor contains an internal thermal fuse that is not serviceable. The thermal fuse is controlled by a computer inside the diagnostic monitor. The computer will open the thermal fuse whenever a short on the deployment circuits occur. The thermal fuse does not open because of excessive current flowing through it. Do not attempt to jump the thermal fuse with a circuit breaker or any other type of fuse.

WARNING:

DO NOT INSTALL A NEW DIAGNOSTIC MONITOR UNTIL THE CAUSE OF FAULT CODE 51 HAS BEEN LOCATED AND REPAIRED. IF A SHORT-TO-GROUND HAS NOT BEEN LOCATED AND REPAIRED, THE SHORT IS INTERMITTENT AND IS NOT PRESENT AT THIS TIME. INSTALLING A NEW DIAGNOSTIC MONITOR WITH AN INTERMITTENT SHORT IN THE SYSTEM WILL RESULT IN REPEAT OPEN THERMAL FUSES IN DIAGNOSTIC MONITORS AND REPEAT SERVICE.

Air Bag Diagnostic Monitor Internal Thermal Fuse – Fuse Blown Due to Intermittent Short-to-Ground

Fault Code 51

Normal Operation

NOTE: The air bag diagnostic monitor contains an internal thermal fuse that is not serviceable. The thermal fuse is controlled by a computer inside the air bag diagnostic monitor. The computer will blow the thermal fuse whenever a short on the deployment circuits occurs. **The thermal fuse does not blow because of excessive current flowing through it. DO NOT attempt to jumper across the thermal fuse with a circuit breaker or any other type of fuse.**

CAUTION: Do not install a new air bag diagnostic monitor until the short has been located and corrected. If a short-to-ground has not been located and corrected, then the short-to-ground is intermittent and is not present at this time. Installing a new air bag diagnostic monitor with an intermittent short in the system will result in repeated blown air bag diagnostic monitors and repeat repairs.

The air bag diagnostic monitor measures the voltages at the air bag diagnostic monitor connector pins. When certain air bag deployment wires are shorted-to-ground (heavy lines illustrated in the following schematic), the system may become susceptible to an unwanted deployment of the air bags. The air bag diagnostic monitor senses a short-to-ground on any of these circuits and helps prevent unwanted air bag deployment by blowing the air bag diagnostic monitor thermal fuse. Blowing this fuse removes all power (battery and backup power) from the air bag deployment circuits. While the short-to-ground exists, the air bag diagnostic monitor will flash a Fault Code 13. If the short-to-ground is intermittent and temporarily corrects itself, the air bag diagnostic monitor will flash a Code 51.

NOTE: If the short-to-ground returns, the higher priority Code 13 will flash instead of 51.

If the air bag warning indicator is flashing Code 51 and a short-to-ground has not been serviced, this means that an **intermittent** short-to-ground exists in the air bag system. The air bag diagnostic monitor should be replaced only after repairs to the intermittent short have been completed.

Some service tips for finding an intermittent short-to-ground are:

1. Consult OASIS (Restraint Systems Service Code 104000) for up-to-date diagnostics and descriptions of wiring concern locations for the vehicle (VIN) you are working on. OASIS is updated daily using concern descriptions from engineering and dealership service sources.
2. Inspect wiring and harnesses in areas where they pass through or are located next to metal components (e.g., engine compartment bulkhead, body sheet metal, component mounting brakes, etc.).

CODE 51 SEQUENCE OF EVENTS

Short-to-ground occurs on one or more of the circuits indicated by heavy lines in the electrical schematic.

↓

The air bag diagnostic monitor recognizes the shorted wiring and flashes a Fault Code 13 and sends a signal to the internal thermal fuse, causing it to blow.

↓

The air bag diagnostic monitor will continue to flash the Code 13 while the short-to-ground is present. If the short-to-ground goes away, a Fault Code 51 appears.

↓

The air bag diagnostic monitor only flashes a Code 51 when the thermal fuse is blown and the short-to-ground is not present. **Do not replace the air bag diagnostic monitor until the short-to-ground has been located and serviced.** Consult OASIS for shorted wiring information.

Code 51 After Air Bag Deployment

NOTE: Air bag diagnostic monitors can withstand several air bag deployments and do not need to be replaced after every deployment. Only replace the air bag diagnostic monitor if it is damaged.

Occasionally, immediately after an air bag deploys, the internal wiring of the air bag may become shorted to the metal housings of the air bag. This internal air bag short is detected by the air bag diagnostic monitor as a short-to-ground in the air bag deployment wiring. Since the air bag diagnostic monitor is still operating immediately after most deployments, the air bag diagnostic monitor will detect the shorted wiring and will flash Code 13 and blow the internal thermal fuse. After the deployment, as the air bag cools off, the internal shorted wiring may correct itself, therefore the short-to-ground will no longer exist and the air bag diagnostic monitor will flash Code 51. If a vehicle with a deployed air bag is flashing Code 51, inspect and replace all the damaged areas of the vehicle with crushed wiring, sensors, etc. If no damage is found, assume that the deployed air bag was the cause for the intermittent short and replace the air bag diagnostic monitor when the new air bag is installed.

TB-4896-A

Figure 6

ELECTRICAL SCHEMATIC – AIR BAG DIAGNOSTIC MONITOR INTERNAL THERMAL FUSE – FUSE BLOWN DUE TO INTERMITTENT SHORT TO GROUND FAULT CODE 51

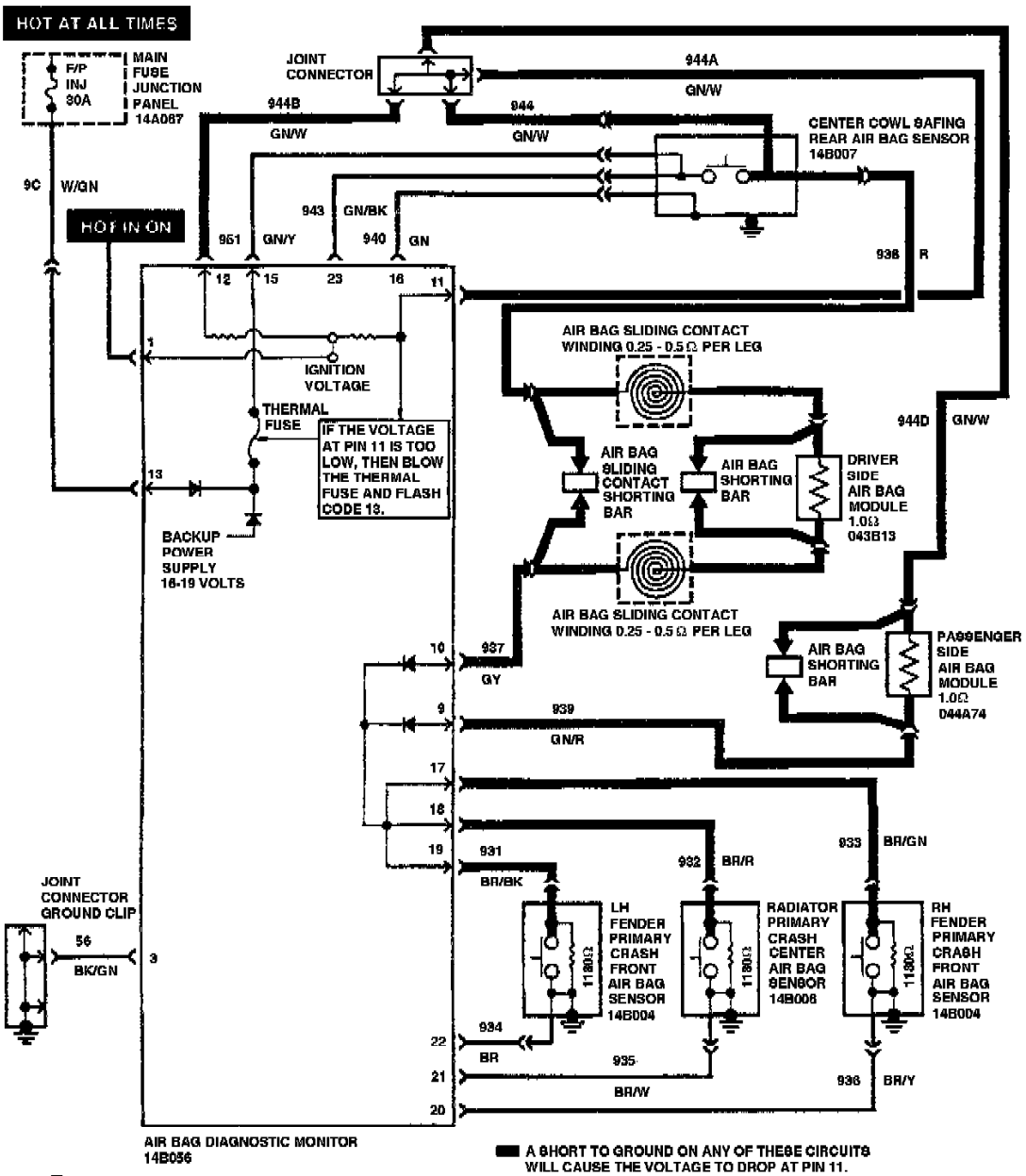

Figure 7

The diagnostic monitor measures the voltages at the diagnostic monitor connector pins. The diagnostic monitor will sense a short-to-ground on any air bag deployment circuit and if a short is detected, will open the diagnostic monitor's internal thermal fuse. With the fuse open it removes all power from the air bag deployment circuits. While the short-to-ground exists, the monitor will flash Fault Code 13. If the short-to-ground is intermittent and temporarily corrects itself, the diagnostic monitor will flash Fault Code 51. Refer to Figures 6 and 7.

If the short-to-ground returns, the higher priority Code 13 will be flashed instead of 51.

If the air bag indicator is flashing Code 51 and a short-to-ground has not been serviced, this means an intermittent short-to-ground exists in the air bag system. The diagnostic monitor should only be replaced after service of the short-to-ground has been completed.

Code 51 Sequence of Events

1. A short-to-ground occurs on one or more of the air bag deployment circuits.

Air Bag or Air Bag Sensor Circuit Shorted-to-Ground

Fault Code 13

Normal Operation

The air bag diagnostic monitor measures the voltage at Pin 11 (Circuit 944A "GN/W") of the air bag diagnostic monitor connector. The voltage at Pin 11 varies with the charging system voltage as shown below:

PIN 11 VOLTAGE CHART	
Charging System Voltage	**Voltage at Pin 11**
9.0	1.9
9.5	2.0
10.0	2.1
10.5	2.2
11.0	2.3
11.5	2.4
12.0	2.5
12.5	2.6
13.0	2.7
13.5	2.8
14.0	2.9
14.5	3.0
15.0	3.1
15.5	3.2
16.0	3.3

Note that Circuit 944A is connected to Circuit 937 ("GY") and Circuit 939 ("GN/R") through the driver side air bag module (-043B13-), passenger side air bag module (-044A74-) and center cowl safing rear air bag sensor. Also, note that Circuits 937 and 939 are connected to the RH, LH and center primary crash air bag sensor feed circuits (933 ["BR/GN"], 932 ["BR/R"], and 931 ["BR/BK"]) through diodes inside the air bag diagnostic monitor. If the air bag diagnostic monitor measures a voltage of 2.0 volts or less at Pin 11, the air bag diagnostic monitor will flash a Code 13 to indicate a possible short-to-ground on this circuit (refer to the following Possible Causes for additional circuits that may be shorted-to-ground). When flashing Code 13, the air bag diagnostic monitor blows its internal thermal fuse. This disables the air bag deployment circuit. If the voltage at Pin 11 returns to normal (because the short-to-ground no longer exists), a Fault Code 51 will be present on the air bag warning indicator, due to the open thermal fuse (refer to Fault Code 51 [Figure 6] for details).

Possible Causes

Low voltage at air bag diagnostic monitor Pin 11 can be caused by:

1. **A short-to-ground within the wiring harness on Circuits 944A ("GN/W"), 944 ("GN/W"), 944B ("GN/W"), 944D ("GN/W"), 938 ("R"), 937 ("GY"), 939 ("GN/R"), 933 ("BR/GN"), 932 ("BR/R") or 931 ("BR/BK")** causing the air bag diagnostic monitor voltage to drop.

2. **An internal short-to-ground within the air bag sliding contact** causing the driver side air bag module circuit(s) to be shorted-to-ground.

3. **An internal short-to-ground within the center cowl safing rear air bag sensor** causing Circuit 944A ("GN/W"), 944 ("GN/W"), 944B ("GN/W"), 944D ("GN/W"), or 938 ("R") to be shorted-to-ground.

4. NOTE: Circuits 933 ("BR/GN"), 932 ("BR/R") and 931 ("BR/BK") are all connected together inside the air bag diagnostic monitor. Therefore, a short-to-ground on any of these circuits will short all the circuits to ground.

   An internal short-to-ground within one or more of the primary crash air bag sensors causing Circuits 933 ("BR/GN"), 932 ("BR/R"), and 931 ("BR/BK") to be shorted-to-ground.

5. **An internal short to case ground within the driver side air bag module or passenger side air bag module.**

TB-4891-A

Figure 1

ELECTRICAL SCHEMATIC – AIR BAG OR AIR BAG SENSOR CIRCUIT SHORTED TO GROUND FAULT CODE 13

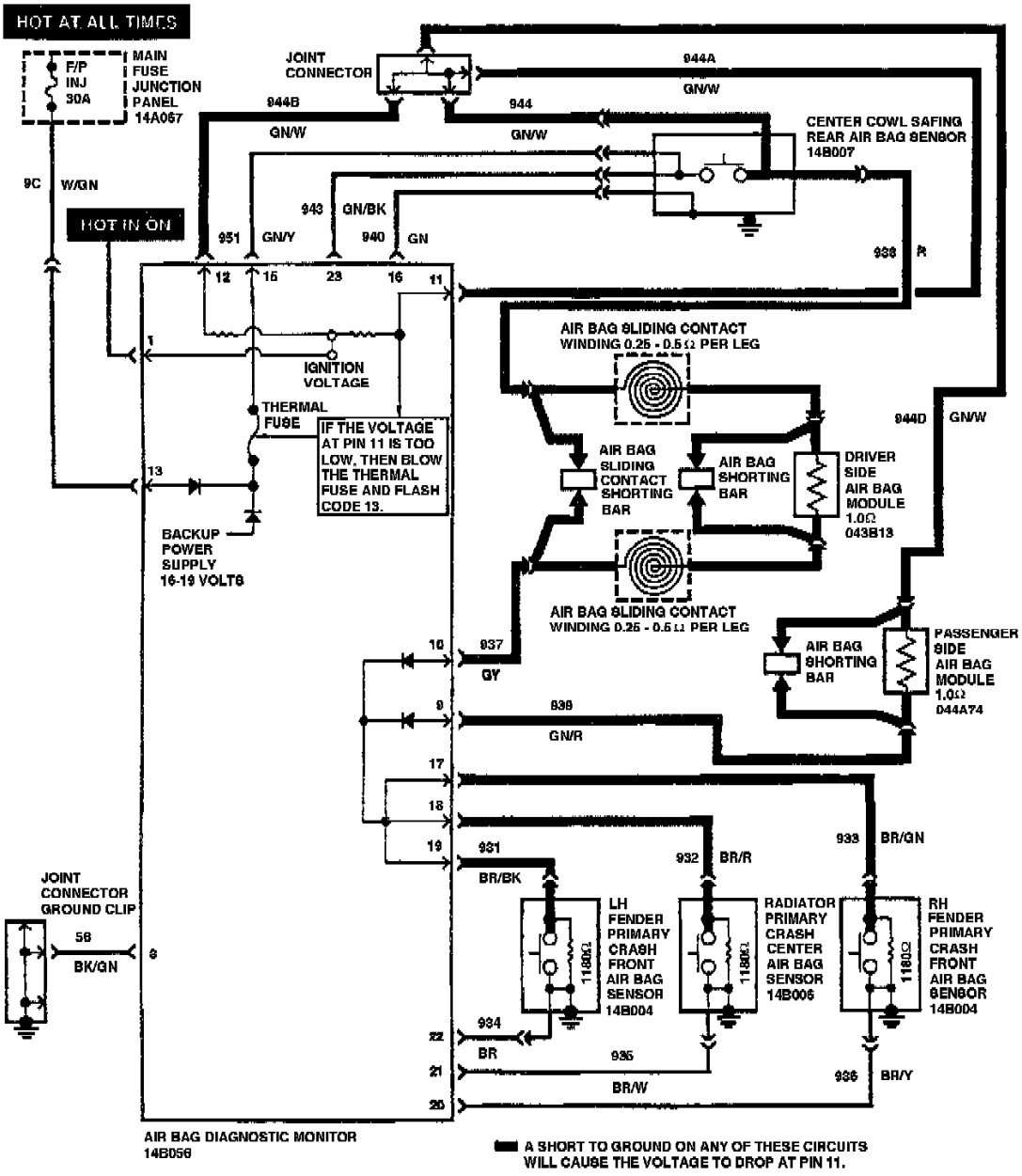

Figure 2

TB-4892-A

2. The diagnostic monitor recognizes the shorted wiring and flashes Code 13 (air bag circuit shorted). Refer to Figures 1 and 2.

NOTE:
FAULT CODE 13 WILL ONLY FLASH WHILE THE SHORT-TO-GROUND IS PRESENT.

3. The diagnostic monitor sends a signal to its internal thermal fuse, causing the fuse to blow. This disables the air bag deployment circuits.

4. The diagnostic monitor will continue to flash Code 13 while the short is present. If the short goes away, Code 51 will appear.

5. The diagnostic monitor only flashes a Code 51 when the internal thermal fuse is blown and a short-to-ground is not present.

NOTE:
IT MAY BE POSSIBLE TO REPEAT FAULT CODE 13 BY MOVING ("SHAKE-WIGGLE" TEST) THE WIRING TO RECREATE THE ORIGINAL SHORT. HOWEVER, THIS WILL REQUIRE THE REACTIVATION OF THE AIR BAG SYSTEM, WHICH WILL AGAIN REQUIRE DEACTIVATION OF THE AIR BAG SYSTEM AFTER THE TEST IS PERFORMED.

CAUTION:
ALL AIR BAG SYSTEM COMPONENTS ARE SERVICED BY REPLACEMENT ONLY. IF ANY OF THESE COMPONENTS OR COMPONENT WIRING ARE DAMAGED IN ANY WAY, THEY CANNOT BE REPAIRED AND MUST BE REPLACED.

These components include the following:

^ Driver Air Bag Module Assembly

^ Passenger Air Bag Module Assembly

^ Sliding Contact (Clockspring)

^ Diagnostic Monitor

^ Safing Sensor

^ Primary Crash Sensors

Detailed Service Procedure

WARNING:

PRIOR TO PERFORMING ANY AIR BAG DIAGNOSTICS OR REPAIRS, BE SURE TO DEACTIVATE THE AIR BAG SYSTEM. ALSO, BE SURE TO CONNECT THE CORRECT AIR BAG SIMULATOR(S) IN PLACE OF THE DRIVER AND/OR PASSENGER AIR BAG(S).

1. Thoroughly check circuitry for any intermittent wiring shorts before attempting to replace the diagnostic monitor. Do not attempt to jump the thermal fuse with a circuit breaker or any other type fuse.

WARNING:

DO NOT INSTALL A NEW DIAGNOSTIC MONITOR UNTIL THE CAUSE OF FAULT CODE 51 HAS BEEN LOCATED AND REPAIRED. IF A SHORT-TO-GROUND HAS NOT BEEN LOCATED AND REPAIRED, THE SHORT IS INTERMITTENT AND IS NOT PRESENT AT THIS TIME. INSTALLING A NEW DIAGNOSTIC MONITOR WITH AN INTERMITTENT SHORT WILL RESULT IN REPEAT BLOWN INTERNAL THERMAL FUSES IN DIAGNOSTIC MONITORS AND REPEAT SERVICE.

2. Check the following locations for shorts-to-ground:

NOTE:

THE FOLLOWING ARE THE MOST COMMON LOCATIONS WHICH HAVE BEEN IDENTIFIED FOR INTERMITTENT WIRING SHORTS. IN THE EVENT INTERMITTENT WIRING SHORTS CANNOT BE FOUND AT THESE LOCATIONS, YOU MUST CHECK ALL OF THE AFFECTED WIRING AS REQUIRED.

^ Water may have entered the diagnostic monitor due to leaks near the monitor. Check for the following indicators:

^ A. Rust on the monitor's mounting bracket.

^ B. A white milky-colored substance on the printed circuit board in the monitor.

^ Condensation may have formed in the diagnostic monitor due to humidity in the air during A/C operation. Check for the following indicators:

^ A. Rust on the monitor's mounting bracket.

^ B. A white milky-colored substance on the printed circuit board in the monitor.

^ Wires may be pinched/cut between brake pedal mounting bracket and body.

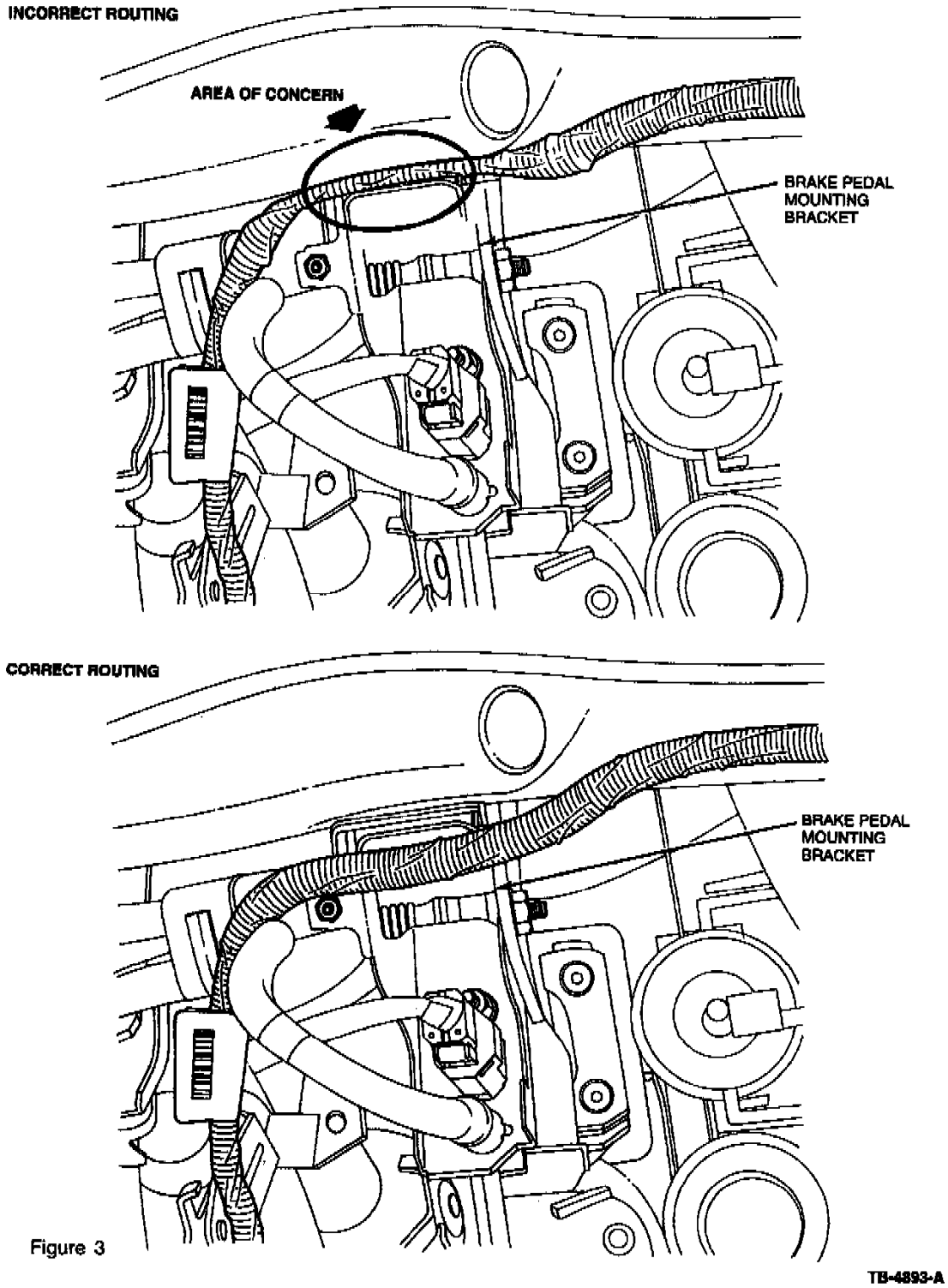

Figure 3

^ Using a flashlight, inspect air bag wire harness routing along brake pedal mounting bracket (Figure 3).

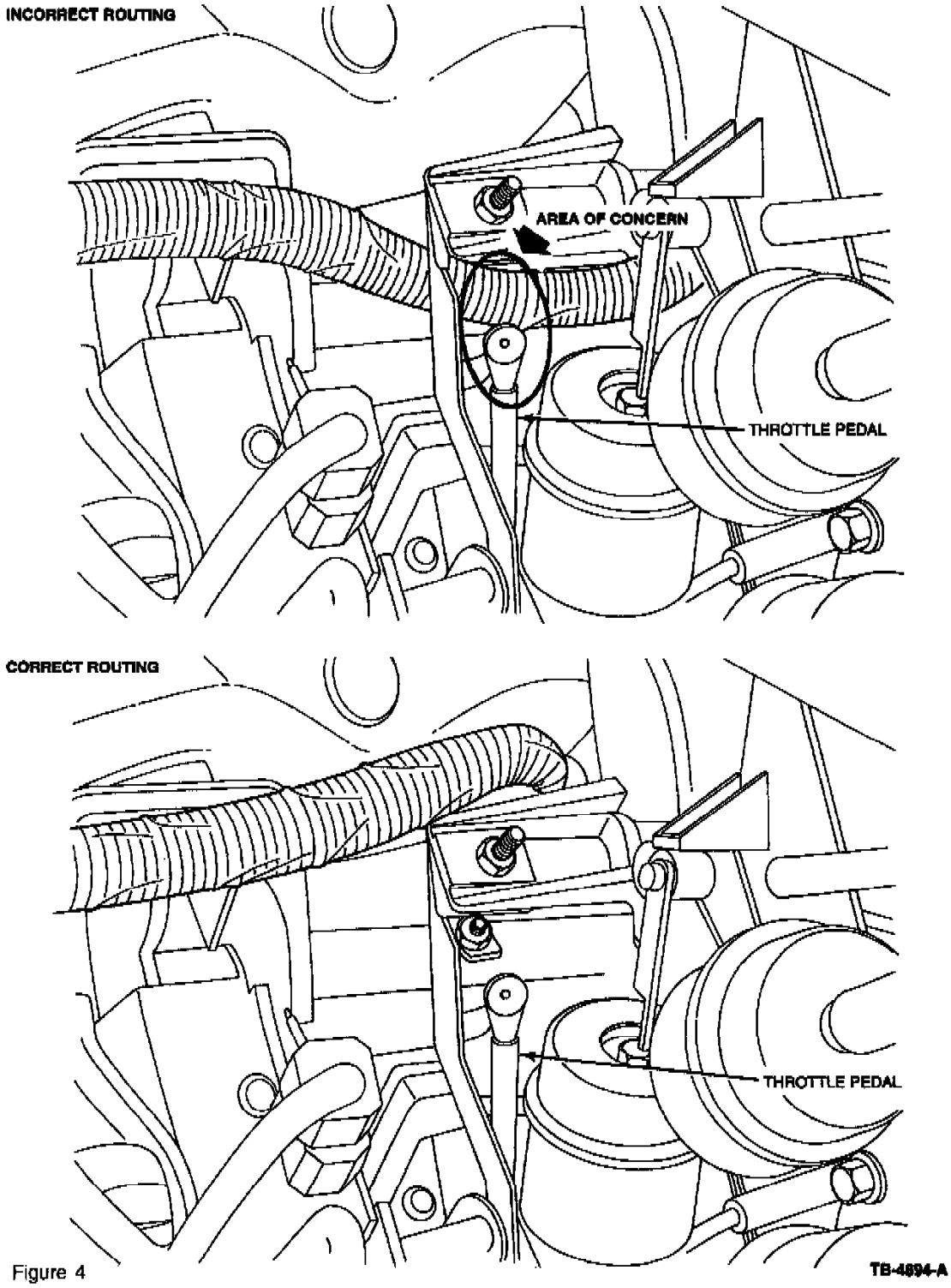

Figure 4

^ Wires may be chafed or cut above the throttle pedal (Figure 4).

^ Using a flashlight, inspect air bag wire harness routing in area above throttle pedal (Figure 4).

^ Wires may be pinched/cut between instrument panel and body on RH side behind glove compartment.

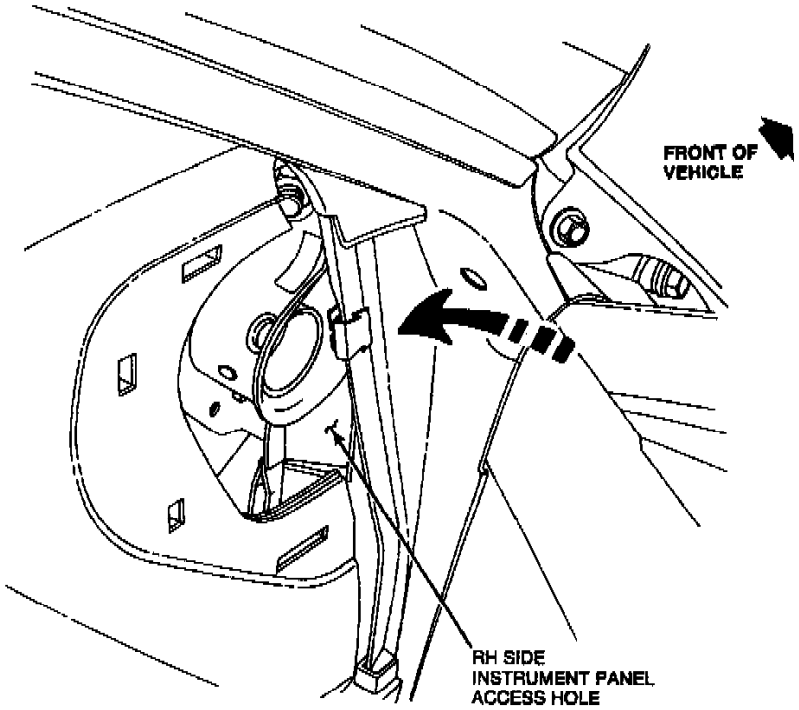

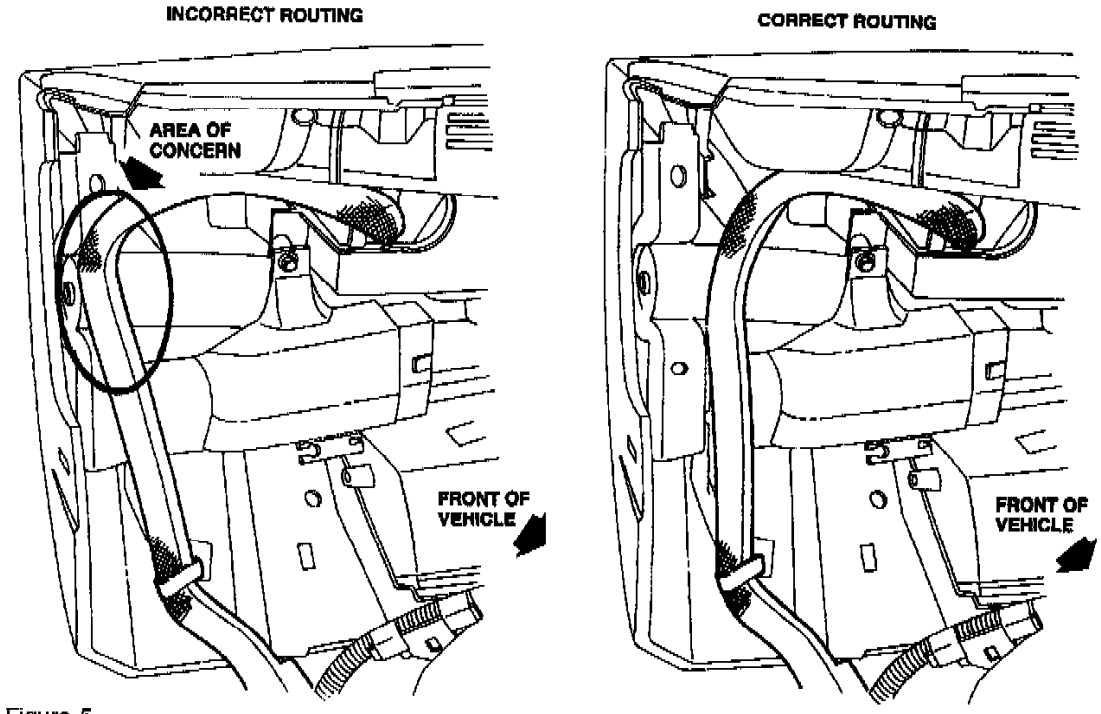

Figure 5

TB-4895-A

^ Lower glove compartment door and RH instrument panel access cover. Using a flashlight, inspect air bag wire harness routing for pinch points and/or cuts (Figure 5).

^ Inspect wiring/wiring harnesses in areas where they pass through or are located next to metal components (i.e., engine compartment bulkhead, body sheet metal, component mounting brackets, etc.).

3. Any wiring on air bag system circuits may be repaired as follows:

   a. If the insulation on any of the wires is nicked or cut, exposing bare wire, wrap affected area(s) with vinyl electrical tape.

NOTE:
USE FLAME RETARDANT VINYL ELECTRICAL TAPE FOR ANY REPAIRS IN THE ENGINE COMPARTMENT.

   b. If wire(s) are only nicked, wrap affected area(s) with vinyl electrical tape.

   c. If wire(s) are cut, proceed to Step 4.

4. Cut a piece of suitable length, same gauge replacement wire.

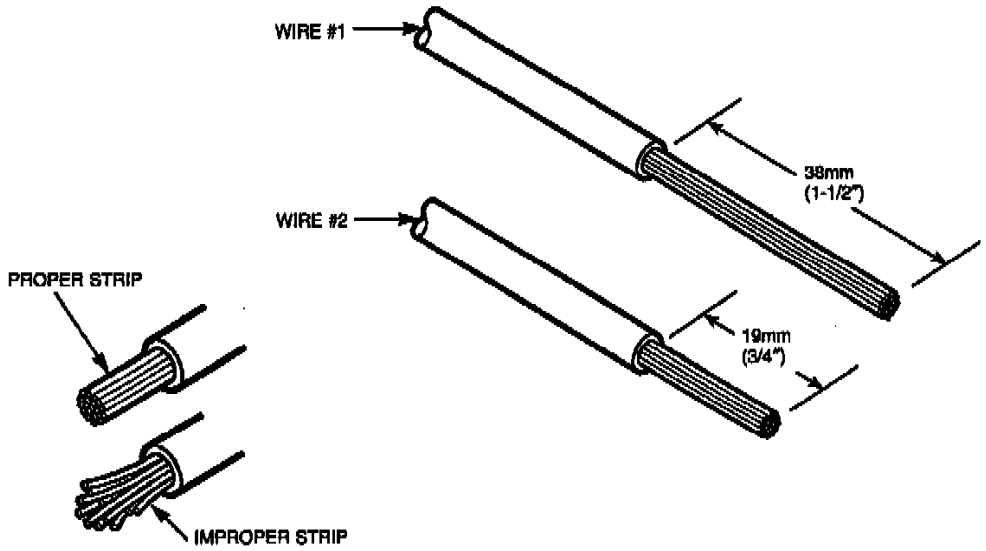

Figure 8

TB-4684-A

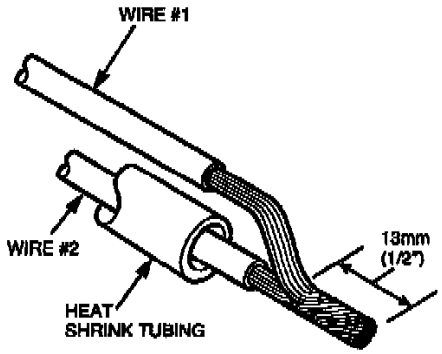

Figure 9

TB-4685-A

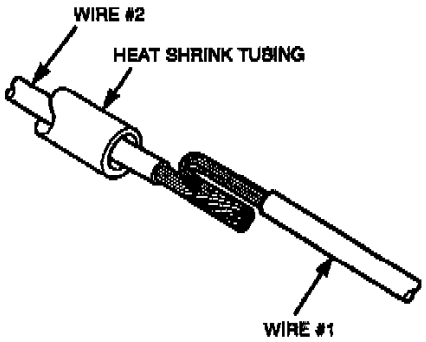

Figure 10

TB-4686-A

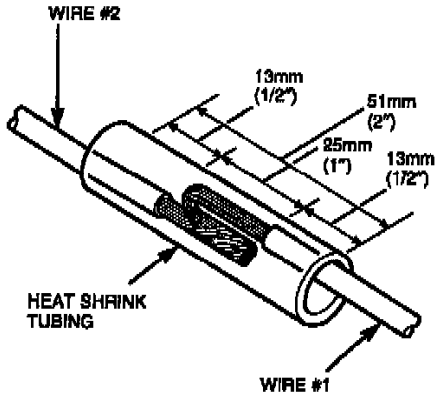

Figure 11

TB-4687-A

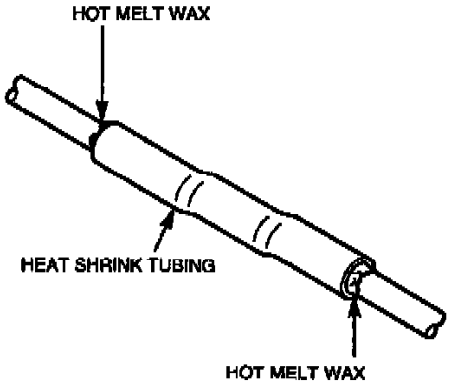

Figure 12

TB-4688-A

5. Slip Heat Shrink Tubing (WT-5627-A) over cut wire as shown in Figures 8-12.

6. Join replacement wire to existing cut wire and twist the ends together as shown in Figures 8-12.

NOTE:
BE SURE HEAT SHRINK TUBE IS ON CUT WIRE BEFORE SPLICING WIRES TOGETHER.

7. Using only 63/37 rosin core solder (do not use acid core), apply solder and heat to spliced wires.

WARNING:
USE ONLY A HEAT GUN. DO NOT USE A HAIR DRYER OR ANY FLAME TO HEAT THE SHRINK TUBE.

8. Position spliced wire so that shrink tubing can be positioned over soldered splice as shown in Figures 8-12.

9. Apply heat to shrink tube.

NOTE:
DO NOT OVERHEAT SHRINK TUBE. HEAT ONLY UNTIL ADHESIVE (HOT SEALANT) FLOWS FROM EACH END OF THE SHRINK TUBING AS SHOWN IN FIGURES 8-12. WHEN THE "HOT SEALANT" FLOWS FROM BOTH ENDS OF THE SHRINK TUBING, THE TUBING HAS BEEN HEATED ENOUGH AND AN ADHESIVE SEAL HAS BEEN FORMED BETWEEN THE HEAT SHRINK TUBE AND THE WIRE INSULATION.

10. Wrap the repaired area with vinyl electrical tape.

NOTE:
DO NOT ALLOW REPAIRED AREA TO COME IN CONTACT WITH ANY METAL SURFACES IN THE AFFECTED AREAS.

11. To avoid future contact with metal surfaces, perform the following:

    a. Remove any existing burrs or sharp edges from metal surfaces that may come in contact with the repaired wiring.

    b. Apply ordinary cloth tape to these areas.

    c. Wrap nicked wiring with vinyl electrical tape.

    d. Make sure wiring retainers are in the proper retaining holes.

    e. Use an appropriate wiring retainer (chicken band) to pull wiring away from metal surfaces.

12. Replace the Air Bag Diagnostic Monitor (F32Z-14B056-A). Refer to the appropriate year Probe Service Manual, Section O1-20B, for removal and installation procedures.

WARNING:
CONNECT THE APPROPRIATE AIR BAG SIMULATOR TO AIR BAG WIRING BEFORE SYSTEM PROVE-OUT IS PERFORMED.

13. Reactivate the air bag system.

14. Perform the system prove-out as follows:

    a. Turn ignition switch from OFF to RUN and visually monitor the air bag warning indicator. The air bag warning indicator will light continuously for approximately 6 seconds and then turn off.

If an air bag system fault is present, the air bag warning indicator will either fail to light, remain lit continuously or flash. The flashing may not occur until approximately 90 seconds after the ignition switch has been turned from OFF to RUN. This is the time required for the air bag diagnostic monitor to complete testing of the system.

If the air bag warning indicator is inoperative and an air bag system fault exists, a tone will sound in a pattern of five (5) sets of five (5) beeps. If this occurs, the air bag warning indicator will need to be serviced before further diagnosis can be done.

NOTE:
THE ABOVE INFORMATION IS ALSO GIVEN IN SECTION O1-20B OF THE APPROPRIATE YEAR PROBE SERVICE MANUAL.

WARNING:
REMOVE THE AIR BAG SIMULATOR AND RECONNECT THE AIR BAG(S) WHEN SYSTEM IS REACTIVATED.Technical Service Bulletin # **9523** Date: **950130**

Electronic Fuel Gauge - Erratic Readings

Article No.
95-2-3

01/30/95

^ GAUGE - ERRATIC DISTANCE-TO-EMPTY AND FUEL GAUGE READINGS - VEHICLES BUILT BEFORE 1/1/94

^ GAUGE - FUEL - ELECTRONIC - "CO" DISPLAYED IN ELECTRONIC CLUSTER WITH TWO TOP/BOTTOM BARS HIGHLIGHTED - VEHICLES BUILT BEFORE 1/1/94

FORD:
1986-92 TAURUS
1989-94 PROBE
1990-94 CROWN VICTORIA
1993-94 THUNDERBIRD

LINCOLN-MERCURY:
1985-92 MARK VII
1986-94 CONTINENTAL, SABLE
1990-94 GRAND MARQUIS, TOWN CAR
1993-94 COUGAR, MARK VIII

LIGHT TRUCK:
1990-94 AEROSTAR

ISSUE:
There may be erratic Distance-To-Empty (DTE) and fuel gauge readings, or circuit open "CO" displayed in the electronic cluster with two (2) top/bottom bars highlighted. This is caused by fuel sender card overprint material and/or an intermittent connection between the spring and contact on the sender card.

PART NUMBER	PART NAME
E5LY-9275-B	Fuel Sender Assembly (1986-92 Mark VII)
F32Z-9275-C	Fuel Sender Assembly (1989-94 Probe)
F3AZ-9275-G	Fuel Sender Assembly (1990-94 Crown Victoria/Grand Marquis)
F3LY-9275-B	Fuel Sender Assembly (1993-94 Mark VIII)
F3VY-9275-B	Fuel Sender Assembly (1990-94 Town Car With Electronic Cluster)
F3OY-9H307-A	Fuel Pump/Sender Assembly (1986-89 Taurus/Sable, 1986-94 Continental With 18 Gallon Fuel Tank)
F3DZ-9H307-E	Fuel Pump/Sender Assembly (1990-92 Taurus/1990-94 Sable With EIC)
F3SZ-9H307-C	Fuel Pump/Sender Assembly (1993-94 Thunderbird/Cougar)
F3SZ-9H307-D	Fuel Pump/Sender Assembly (1993 Thunderbird SC)
F4SZ-9H307-D	Fuel Pump/Sender Assembly (1994 Thunderbird SC)
F39Z-9H307-A	Fuel Pump/Sender Assembly (1990-94 Aerostar)

ACTION:
Install a revised sender assembly or fuel pump/sender assembly. Refer to the appropriate vehicle Service Manual, Fuel System Section, for removal

and installation procedures. Refer to the Parts Block in this article for correct parts usage.

OTHER APPLICABLE ARTICLES: NONE
WARRANTY STATUS:
Eligible Under The Provisions Of Bumper To Bumper Warranty Coverage For 1992-94 Models And 1991 Lincolns, Major Component Warranty Coverage For 1990 And Earlier Model Lincolns, Basic Warranty Coverage For All Other Models

OPERATION	DESCRIPTION	TIME
950203A	Replace Fuel Gauge Sending Unit - Town Car	1.5 Hrs.
950203B	Replace Fuel Gauge Sending Unit - Crown Victoria/Grand Marquis	0.9 Hr.
950203C	Replace Fuel Gauge Sending Unit - Taurus/Sable	1.0 Hr.
950203D	Replace Fuel Gauge Sending Unit - Mark VIII	1.2 Hrs.
950203E	Replace Fuel Gauge Sending Unit - Probe	1.1 Hrs.
950203F	Replace Fuel Gauge Sending Unit - Thunderbird	1.2 Hrs.
950203G	Replace Fuel Gauge Sending Unit Mark VII	0.9 Hr.
950203H	Replace Fuel Gauge Sending Unit Aerostar	1.2 Hrs.

DEALER CODING

BASIC PART NO.	CONDITION CODE
9275/9H307	G25

OASIS CODES: 204000, 204100, 206000

Technical Service Bulletin # **93208** Date: **930929**

Oil Pressure Gauge - Reads Low

Article No.
93-20-8

09/29/93

^ GAUGE - OIL PRESSURE - READS IN LOW RANGE

^ GAUGE - OIL PRESSURE - READS ON LOW SIDE OF THE NORMAL RANGE

FORD:
1993 PROBE

ISSUE:
The oil pressure gauge may read LOW or on the low side of the NORMAL range because of the gauge calibration.

ACTION:
Install a new oil pressure gauge which has been recalibrated to read in the center of the NORMAL range. Refer to the following procedure for service details.

1. Warm the engine up to full operating temperature and verify the low oil pressure reading concern at idle.

2. If the oil pressure gauge reads in the LOW range, check the engine oil pressure using a calibrated mechanical oil pressure gauge. Verify that oil pressure meets specifications per the Service Manual references noted below.

   ^ For the 2.0L engine refer to the 1993 Probe Service Manual, Page 03-01A-5.

   ^ For the 2.5L engine refer to the 1993 Probe Service Manual, Page 03-01B-10.

PART NUMBER	PART NAME	CLASS
F42Z-9B308-A	Oil Pressure Gauge (With Door Ajar Warning)	C
F42Z-9B308-B	Oil Pressure Gauge (Without Door Ajar Warning)	C

a. If the oil pressure is within specification, replace the oil pressure gauge with the new recalibrated oil pressure gauge. Refer to the 1993 Probe Service Manual, Section 13-04, for the removal and installation procedures. Refer to the Parts Block in this article for correct parts usage.

b. If the oil pressure is not within specification, proceed as follows:

^ For the 2.0L engine refer to the 1993 Probe Service Manual, Section 03-01A-5, for further diagnosis.

^ For the 2.5L engine refer to the 1993 Probe Service Manual, Section 03-01B-10, for further diagnosis.

3. If the oil pressure gauge reads on the low side of the NORMAL range, replace the oil pressure gauge with the new recalibrated oil pressure gauge. Refer to the 1993 Probe Service Manual, Section 13-04-10, for the removal and installation procedures. Refer to the Parts Block in this article for correct parts usage.

4. Confirm that the concern is resolved.

OTHER APPLICABLE ARTICLES: NONE
WARRANTY STATUS:
Eligible Under Bumper To Bumper Warranty Coverage

OPERATION	DESCRIPTION	TIME
932008A	Test And Replace Oil Pressure Gauge	1.2 Hrs.

DEALER CODING

BASIC PART NO.	CONDITION CODE
9B308	79

OASIS CODES: 204000, 204200, 206000, 401000

Technical Service Bulletin # **9558** Date: **950313**

Engine - Hard/No Start/Fuel Shutoff Lamp Illuminated

Article No.
95-5-8

03/13/95

^ HARD START/NO START - WIRING - CORROSION/OPEN CIRCUIT AT SPLICE 102/CIRCUIT 9 - FUEL SHUTOFF LAMP ON - VEHICLES BUILT FROM 4/16/92 THROUGH 8/25/94 - WITH SPEED CONTROL AND WITHOUT ANTI-LOCK BRAKES - 2.0L ENGINE

^ LAMP - FUEL SHUTOFF - CORROSION/OPEN CIRCUIT AT SPLICE 102/CIRCUIT 9 - HARD START/NO START - VEHICLES BUILT FROM 4/16/92 THROUGH 8/25/94 - WITH SPEED CONTROL AND WITHOUT ANTI-LOCK BRAKES - 2.0L ENGINE

^ WIRING - CORROSION/OPEN CIRCUIT AT SPLICE 102/CIRCUIT 9 - HARD START/NO START - FUEL SHUTOFF LAMP ON - VEHICLES BUILT FROM 4/16/92 THROUGH 8/25/94 - WITH SPEED CONTROL AND WITHOUT ANTI-LOCK BRAKES - 2.0L ENGINE

FORD:
1993-94 PROBE

This TSB article is being republished in its entirety to provide specific engine identification.

ISSUE:
Some vehicles may be hard to start or may not start, or the Fuel Shutoff Lamp may illuminate. This may be caused by corrosion or a short-to-ground at Splice 102 (Circuit 9).

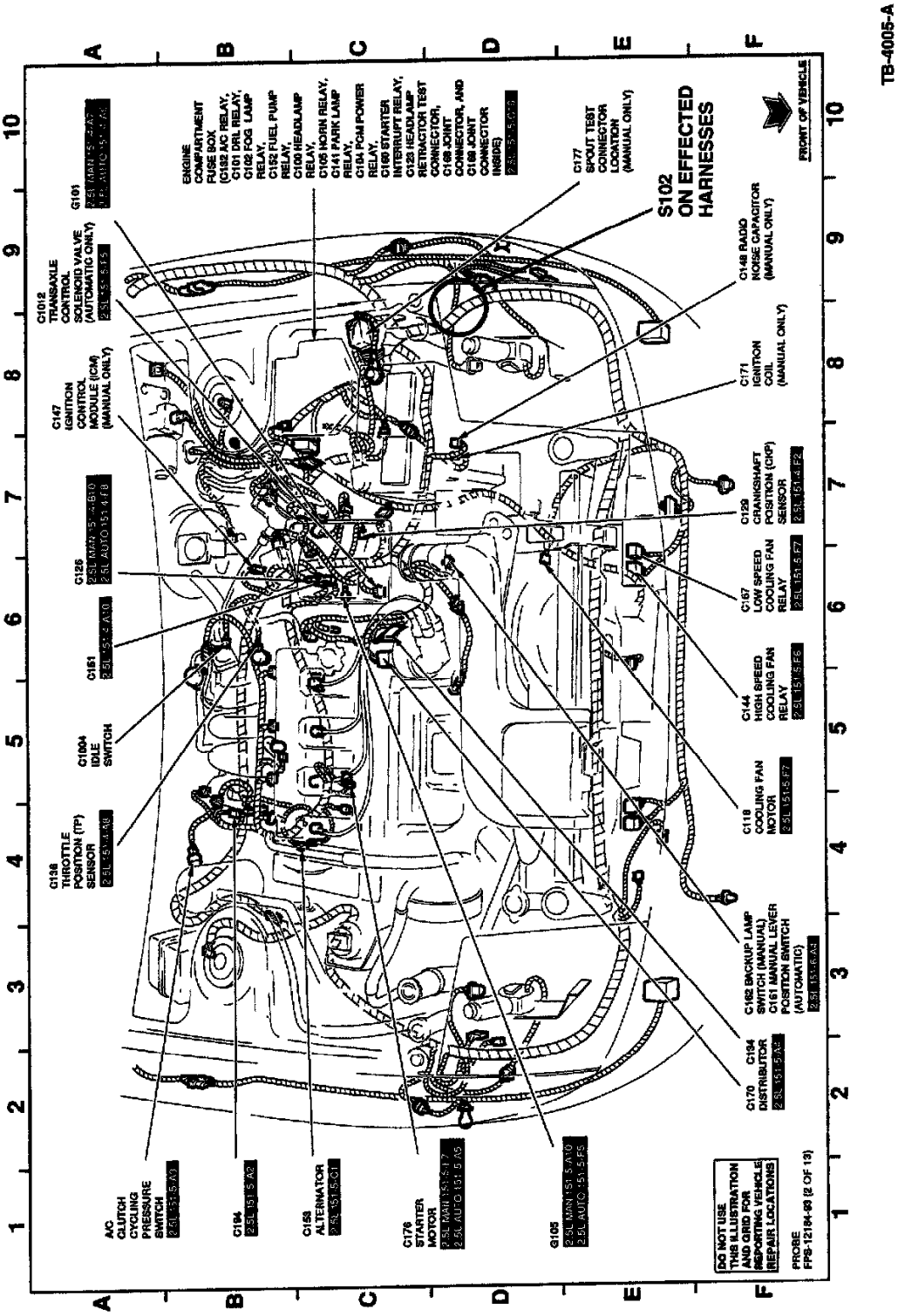

Figure 1

ACTION:
Inspect Splice 102 (see Figure 1) for corrosion or short-to-ground and, if necessary, repair the splice. Cover with self-sealing heat shrink tubing. This repair will minimize future shorts/corrosion at the splice. Refer to the following Service Procedure for details.

SERVICE PROCEDURE

1. Perform a voltage drop test across Circuit 9 from the 30 amp F/P INJ fuse to generator "S" terminal, PCM power relay and fuel pump relay to identify the concern.

2. If voltage drop of 0.2 volts or greater is indicated, Splice 102 requires repair.

3. To inspect, remove the left headlamp assembly to gain access to the harness.

   Locate Splice 102 in the engine compartment under the left headlamp assembly in the main harness.

5. If corrosion is found, cut out the splice and re-solder. If not corroded, but evidence of shorting is present, proceed to Step 6.

6. Apply adhesive-lined heat-shrinkable tubing (WT5627-A) (ESB-M99D56-A2) to seal the repaired splice. Refer to Pages 12-1 and 13-1 in the 1994 Probe EVTM (Electrical and Vacuum Troubleshooting Manual).

PART NUMBER	PART NAME
T5627-A	Heat Shrink Tubing - Self-Sealing (Pk/5)

OTHER APPLICABLE ARTICLES: NONE

SUPERSEDES: 94-25-4

WARRANTY STATUS: Eligible Under The Provisions Of Bumper To Bumper Warranty Coverage

OPERATION	DESCRIPTION	TIME
950508A	Repair Open Or Corroded Splice 102	0.7 Hr.

DEALER CODING

BASIC PART NO.	CONDITION CODE
14290	X1

OASIS CODES: 203200, 206000, 602300, 603300

Technical Service Bulletin # **94116** Date: **940601**

Radio - Front Door Speakers Inoperative

Article No.
94-11-6

06/01/94

RADIO - FRONT SPEAKERS INOPERATIVE - VEHICLES BUILT BEFORE 10/31/93

FORD:
1993-94 PROBE

ISSUE:
The front door speakers may be inoperative because of water entry into the inner door area.

ACTION:
Install a rain shield on the inner door around the speaker to deflect water away from the speaker. Refer to the following procedure for service speakers.

1. Disconnect the battery ground cable.

2. Remove the front door trim panel. Refer to the 1993/94 Probe Service Manual, Section 01-05, for the removal procedure.

3. Remove the three (3) speaker screws.

CAUTION:
HANDLE THE SPEAKER CAREFULLY TO AVOID DAMAGING THE CONE DURING REMOVAL AND INSTALLATION.

4. Pull the speaker out and disconnect the electrical connector.

5. Pull the plastic liner back away from the speaker opening.

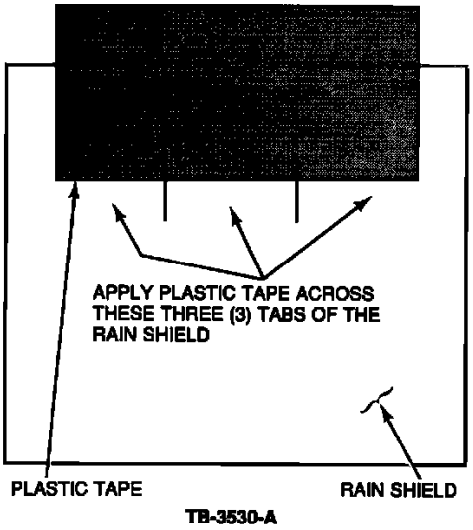

Figure 1

6. Apply plastic tape across the three (3) tabs of the rain shield (F32Z-18B808-A) as shown in Figure 1.

NOTE:
IF THE OLD SPEAKER HAS A PLASTIC COVER, DO NOT REUSE IT ON THE NEW SPEAKER.

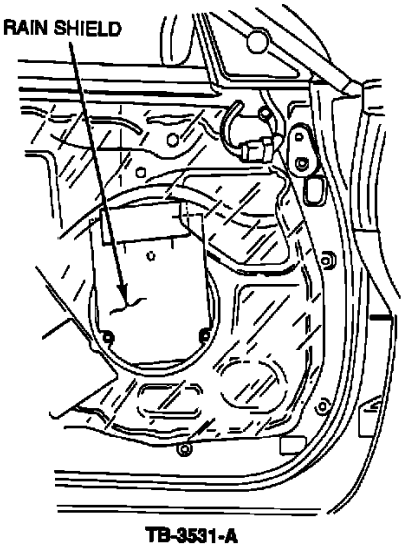

Figure 2

7. Install the bottom edge of the rain shield through the speaker hole in the door. Temporarily hold the rain shield by sticking plastic tape to the door, just above the speaker opening, as shown in Figure 2.

8. Replace the old speakers with new units (F32Z-18808-D), installing the two (2) bottom screws first in order to locate the top screw hole.

9. Remove and discard the plastic tape used to temporarily hold the rain shield.

10. Reinstall the door trim panel. Refer to the 1993/94 Probe Service Manual, Section 01-05, for the installation procedure.

PART NUMBER	PART NAME	CLASS
F32Z-18B808-A	Rain Shield (1 Set)	A
F32Z-18808-D	Speaker	B

OTHER APPLICABLE ARTICLES: NONE
WARRANTY STATUS:
Eligible Under The Provisions Of Bumper To Bumper Warranty Coverage

OPERATION	DESCRIPTION	TIME
941106AT	Install Rain Shield On Inner Doors Around Speaker (Both Sides)	0.6 Hr.
941106A	Install Rain Shield On Inner	0.4 Hr.

Door Around Speaker (One Side)

DEALER CODING

BASIC PART NO.	CONDITION CODE
18808	08

OASIS CODES: 207000

Technical Service Bulletin # **94193** Date: **940921**

Liftgate Shock - Will Not Support Liftgate

Article No.
94-19-3

09/21/94

LIFTGATE - HYDRAULIC LIFTS MAY NOT SUPPORT HATCH WHEN AFTERMARKET SPOILER/WING IS ADDED

FORD:
1993-94 PROBE

ISSUE:
When an aftermarket spoiler/wing is installed on the rear liftgate, the liftgate may not stay in a full up position when opened. Production level hydraulic lifts may not be able to support the added weight.

ACTION:
Replace the hydraulic lifts with increased capacity hydraulic lifts which can support the added weight of aftermarket spoiler/wings up to 10 lbs. (5 kg). Refer to the Probe Service Manual, Section 01-03, for service details.

CAUTION:
MAKE SURE THE PROPER LIFTS ARE BEING USED. USING THE INCORRECT LIFTS COULD CAUSE PERSONAL INJURY. ADDING MORE WEIGHT THAN SPECIFIED TO THE LIFTGATE COULD ALSO RESULT IN INJURY. NO MORE THAN 10 LBS (5 Kgs) MAY BE ADDED TO THE LIFTGATE.

PART NUMBER	PART NAME	CLASS
F42Z-61408A10-AA	Hydraulic Lift	C

OTHER APPLICABLE ARTICLES: NONE
WARRANTY STATUS: INFORMATION ONLY
OASIS CODES: 108000, 111000

Technical Service Bulletin # **97-17-3** Date: **970818**

Sliding Roof Panel - Rattle/Squeak/Creak Noise

Article No.
97-17-3

08/18/97

^ SLIDING ROOF PANEL - NOISE - "RATTLE/SQUEAK/CREAK" FROM SLIDING ROOF PANEL AREA

^ NOISE - "RATTLE/SQUEAK/CREAK" FROM SLIDING ROOF PANEL AREA

FORD:
1993-95 PROBE

This TSB article is being republished in its entirety to revise the service labor Time for Operation A.

ISSUE:
A "rattle, squeak, or creak" noise may be heard from the sliding roof panel area on some vehicles. This may be caused by tight tolerances between the sliding roof panel motor and roof panel.

ACTION:
Insulate the sliding roof panel motor from the roof panel. Refer to the following Service Procedure for details.

PART NUMBER	PART NAME
(Obtain Locally)	Foam Tape
(Obtain Locally)	Cloth Tape
(Obtain Locally)	Felt Tape

OTHER APPLICABLE ARTICLES: NONE

SUPERSEDES: 95-25-1

WARRANTY STATUS: Eligible Under The Provisions Of Bumper To Bumper Warranty Coverage

OPERATION	DESCRIPTION	TIME
971703A	Insulate Sliding Roof Panel Assembly	2.1 Hrs.

DEALER CODING

BASIC PART NO.	CONDITION CODE
61502A58	56

OASIS CODES: 105000, 304000, 702000, 702100, 702200, 702300

Service Procedure

NOTE:

IMPROVEMENTS TO THE SLIDING ROOF PANEL WERE MADE AT VARIOUS TIMES IN PRODUCTION. SOME SLIDING ROOF PANELS MAY ALREADY HAVE SOME OF THE SERVICE ACTIONS IN PLACE. PERFORM ONLY THE SERVICE ACTIONS REQUIRED.

1. Open sliding roof panel to "tilt up" position.

2. Disconnect the negative battery cable.

3. Remove headliner by referring to the appropriate Probe Service Manual, Section 01-05.

4. Remove the sliding roof panel by referring to the Service Manual, Section 01-17.

5. Remove roof opening frame by referring to the Service Manual, Section 01-17.

6. Lay roof opening frame on flat surface with motor facing down.

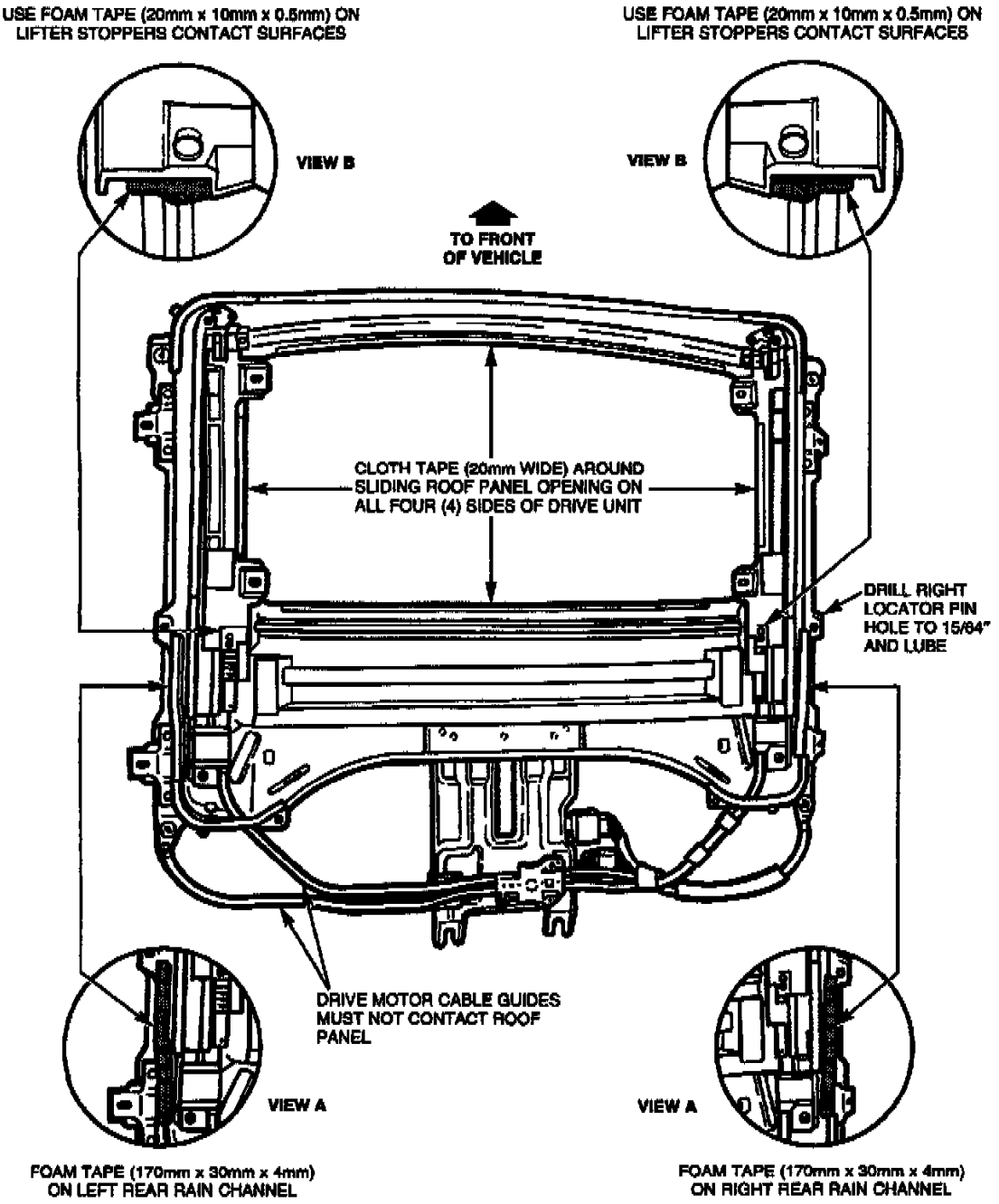

Figure 1

7. Refer to Figure 1 for Steps 7a through 7d.
   a. Apply foam tape (approximately 170 mm long x 30 mm wide x 4 mm thick) to both outer edges of rain channel (Figure 1, View A).
   b. Apply felt tape (approximately 20 mm long x 10 mm wide x 0.5 mm thick) to both lifter stoppers contact surfaces (Figure 1, View B).
   c. Apply cloth tape (approximately 20 mm wide) to sliding roof panel opening on all four (4) sides of drive unit.
   d. Using a 15/64" drill bit, enlarge the RH sliding roof panel drive locator hole and lubricate locator hole with teflon grease or equivalent.
8. Turn roof opening frame over so that the motor is facing up.

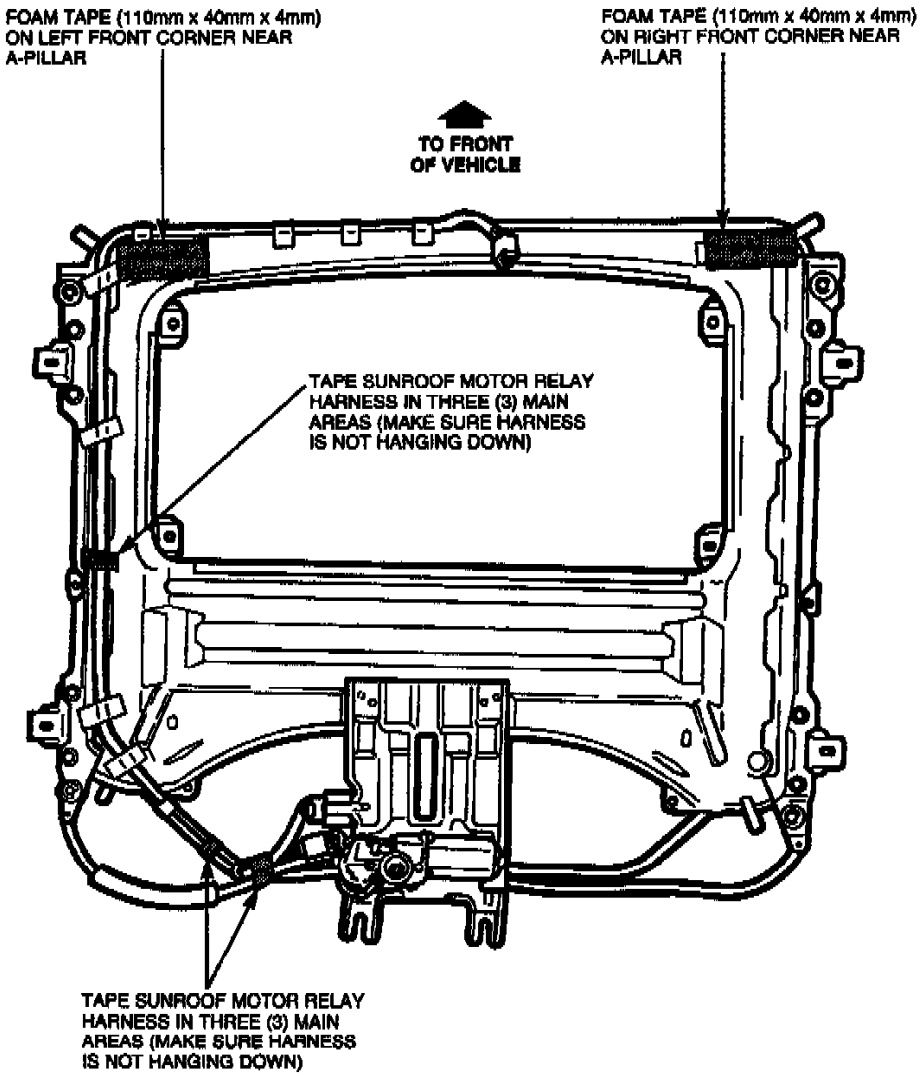

Figure 2

TB-4424-A

9. Refer to Figure 2 for Steps 9a and 9b.

   a. Apply foam tape (approximately 110 mm long x 40 mm wide x 4 mm thick) to both front corners of sliding roof panel drive.

   b. Secure sliding roof panel drive wire harness to sliding roof panel drive at areas indicated in Figure 2.

NOTE:
HARNESS SHOULD NOT HANG DOWN WHERE IT COULD CONTACT THE HEADLINER.

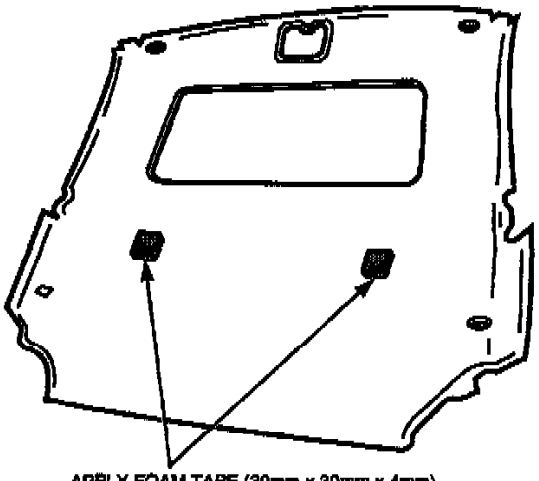

Figure 3

ROOF HEADLINING

TB-4425-A

10. Apply foam tape (approximately 30 mm long x 30 mm wide x 4 mm thick) to backside of headliner's styrofoam blocks (Figure 3).

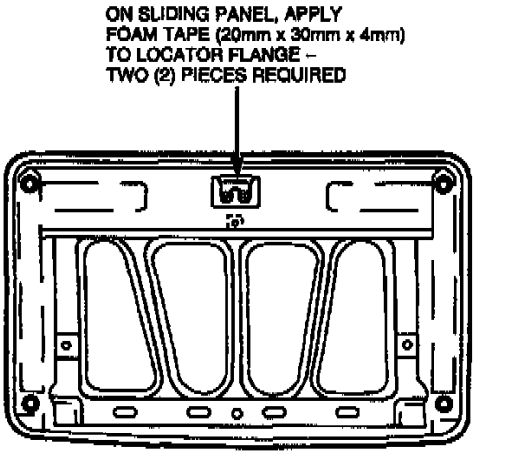

Figure 4

11. Apply two (2) pieces of foam tape (approximately 20 mm long x 30 mm wide x 4 mm thick) to sliding panel backside at locator flange (Figure 4).

12. Reinstall roof opening frame by referring to the Service Manual, Section 01-17.

NOTE:
MAKE SURE THAT THE DRIVE MOTOR CABLE GUIDES DO NOT CONTACT THE ROOF PANEL WHEN INSTALLED (FIGURE 1).

13. Reinstall sliding roof panel by referring to the Service Manual, Section 01-17.

14. Adjust roof panel by referring to the Service Manual, Section 01-17.

15. Reinstall headliner by referring to the Service Manual, Section 01-05.

16. Reconnect negative battery cable.

17. Road test, checking for squeak rattle and windnoise from the sliding roof panel area.

Technical Service Bulletin # **9454** Date: **940309**

Front Door Glass - Wind Noise/Water Leaks

Article No.
94-5-4

03/09/94

^ DOOR - FRONT - GLASS CLOSURE ON TOP OF DRIP RAIL

^ GLASS - FRONT DOOR - ADJUSTMENT PROCEDURE

^ LEAKS - WATER - FRONT DOOR GLASS

^ WINDNOISE - FRONT DOOR GLASS

FORD:
1993-94 PROBE

This TSB article is being republished in its entirety to expand on the front door glass adjustment procedure and to include a step for checking door glass pitch adjustment.

ISSUE:
The 1993/94 Probe Service Manuals do not provide a clear procedure for adjusting the front door glass for windnoise, water leaks, window stutter/jumping and door-closure-on-top-of-the-drip-rail concerns.

ACTION:
Use the following front door glass adjustment procedure and specifications to correct door glass windnoise, water leaks, window stutter/jumping and door glass-closure-on-top-of-the-drip-rail concerns.

SPECIFICATIONS

The specifications provided in this TSB article have ranges because individual vehicles may vary based on how the door fits on the car body. It may

be necessary to change the door glass adjustments to the high or low end of the specifications to correct the concern on your vehicle.

FRONT DOOR GLASS ADJUSTMENT PROCEDURE

1. Check the door and striker for correct adjustment. Repair as necessary. Refer to the 1993 Probe Service Manual, Sections 01-03-5 and 01-14A, for service details.

2. Check the door glass for correct adjustment by using the following steps. Complete the steps in the order provided to obtain the best results.

NOTE:
IT IS NOT NECESSARY TO REMOVE THE WINDOW TO PERFORM ANY OF THE FOLLOWING ADJUSTMENTS. HOWEVER, IF FOR OTHER REASONS THE GLASS NEEDS TO BE REMOVED, DO NOT REMOVE THE WINDOW GUIDE BRACKETS FROM THE WINDOW. THESE ARE NOT ADJUSTABLE AND ARE VERY DIFFICULT TO REINSTALL PROPERLY.

DOOR PANEL REMOVAL AND INSTALLATION

3. Remove the door panel if adjustments need to be made. All door glass measurements can be made without removing the door panel.

DOOR TRIM PANEL REMOVAL

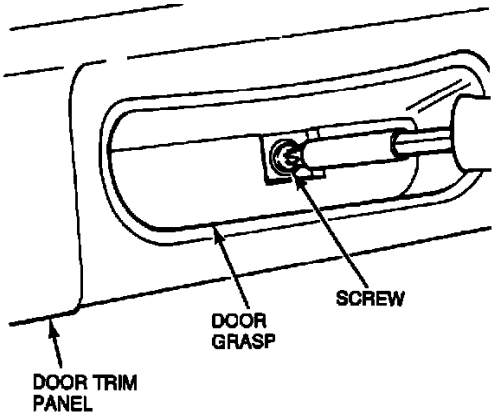

TB-3160-A

Figure 1

a. Remove the door grasp screw, Figure 1.

b. Remove the door grasp.

c. If equipped, remove the window regulator handle.

d. If equipped, gently pry up on the switch panel and remove it from the door trim panel.

e. If equipped, disconnect the switch panel electrical connectors.

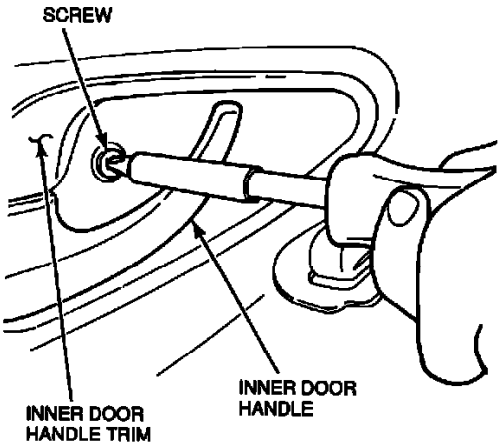

TB-3161-A

Figure 2

f. Remove the inner door handle trim screw, Figure 2.

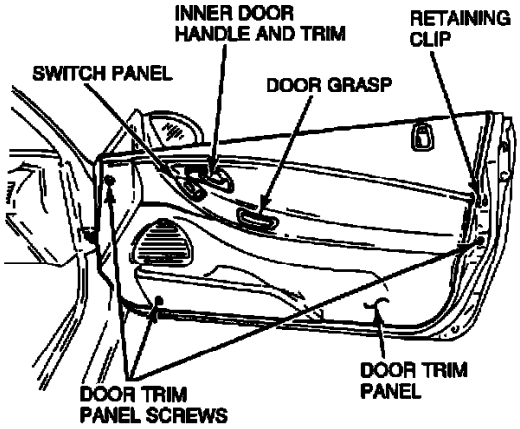

TB-3162-A

Figure 3

g. Remove the three (3) remaining door trim panel screws and one (1) retaining clip. See Figure 3.

h. Carefully pull the door trim panel away from the door to disengage the clips.

i. Guide the inner door handle trim through the door trim panel.

j. Remove the door trim panel.

INSTALLATION

To install, reverse the removal procedure. Replace any door clips that have been damaged. Refer to the parts listing for part number information.

NOTE:
THE FOLLOWING STEP SHOULD BE PERFORMED BEFORE ANY OTHER ADJUSTMENT.

4. Check door glass pitch adjustment:

VIEW LOOKING DOWN ON TOP OF DOOR

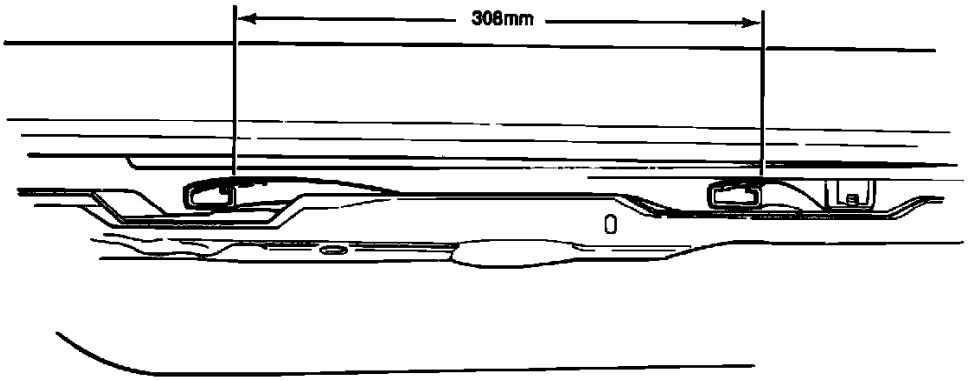

TB-3532-A

Figure 4

a. Measure from the front edge of the regulator channel to the front edge of the glass guide channel, Figure 4. The measurement should be 308 mm (11.82"). To correct, loosen the front glass guide and adjust.

b. Tighten the glass guide channel and recheck.

5. Check the door glass rear height adjustment. Adjust if necessary.

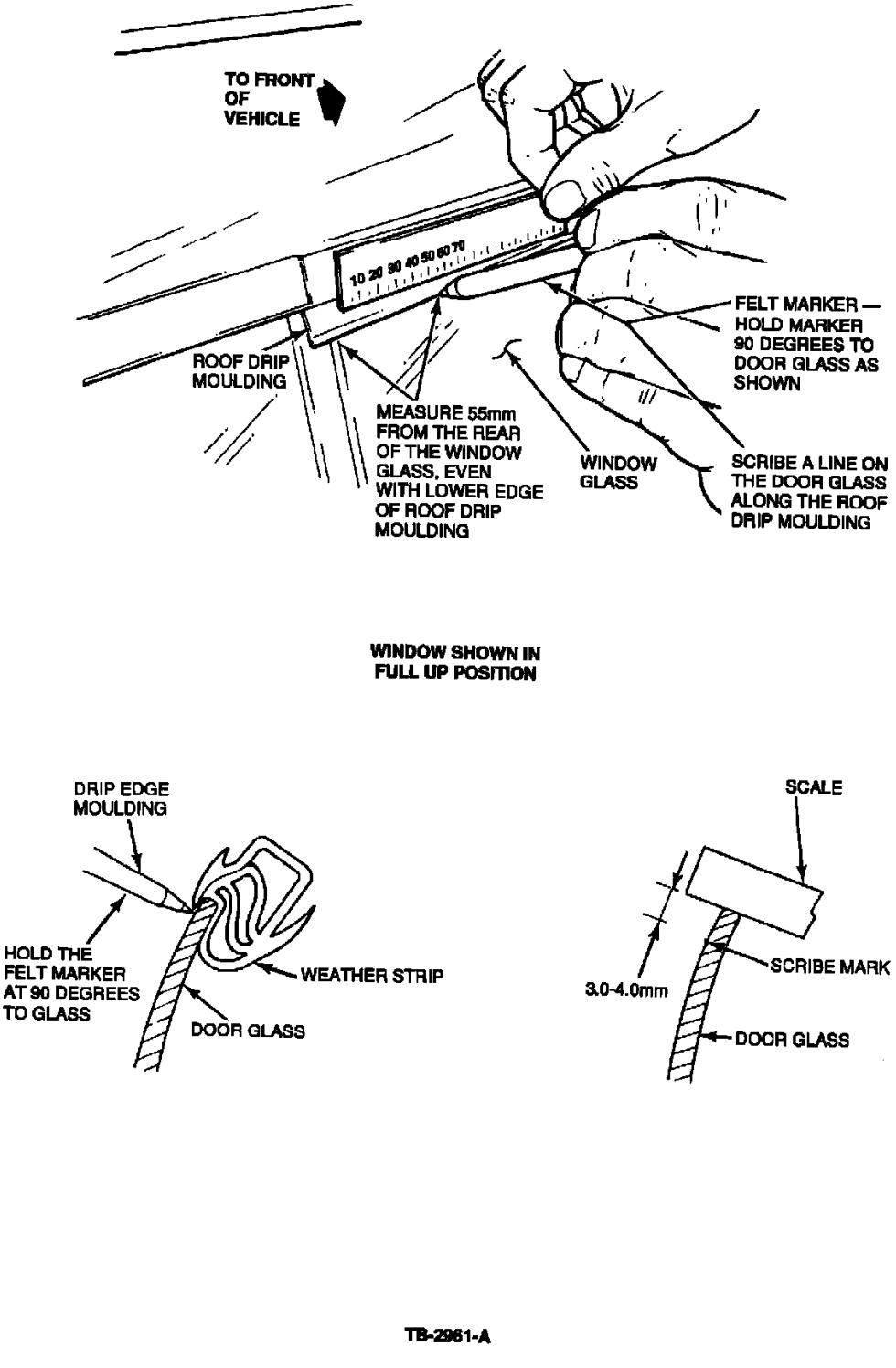

Figure 5

a. With the window in the full up position and the door closed, draw a line along the top of the glass with a felt marker. Locate the line 55 mm from the rear of the glass even with the lower edge of the roof drip moulding, Figure 5. The mark must be 3-4 mm from the top edge of the glass.

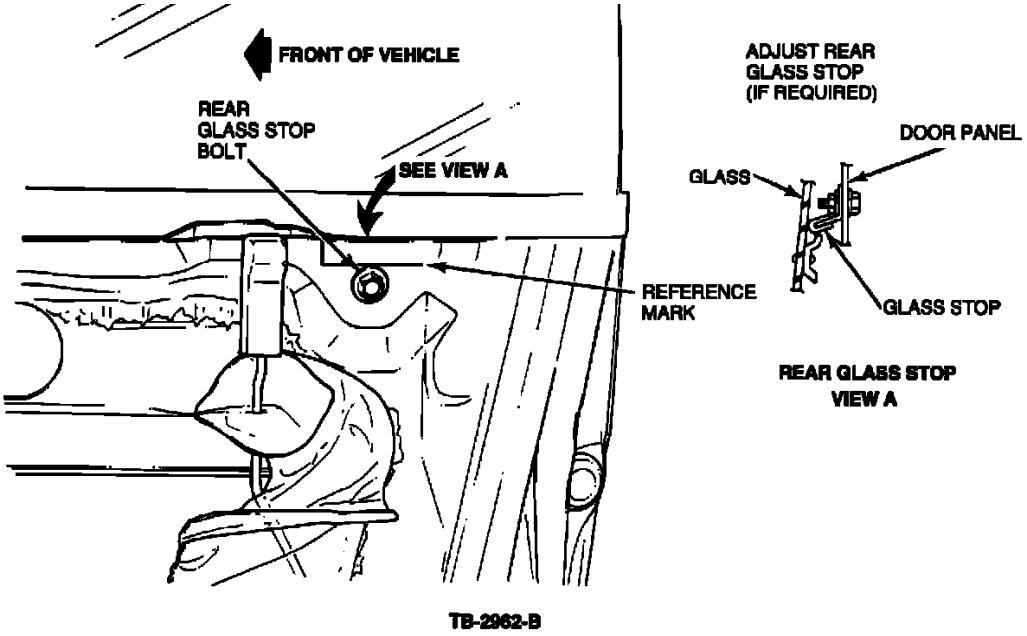

Figure 6

b. If adjustment is required, lower the window 1" (25.4 mm) and make a reference mark on the door. See Figure 6.

c. Loosen the glass stop bolt just enough to be able to slide the stop and move the stop the same distance the mark is out of specification. Example: If the glass is 1.0 mm too high, lower the stop 1.0 mm.

d. Tighten the glass stop bolt.

e. Raise the window and recheck.

6. Check the door glass rear inboard and outboard adjustment. Adjust if necessary.

NOTE:
DO NOT ADJUST THE FRONT WINDOW TRACK INBOARD AND OUTBOARD ADJUSTMENT SCREW.

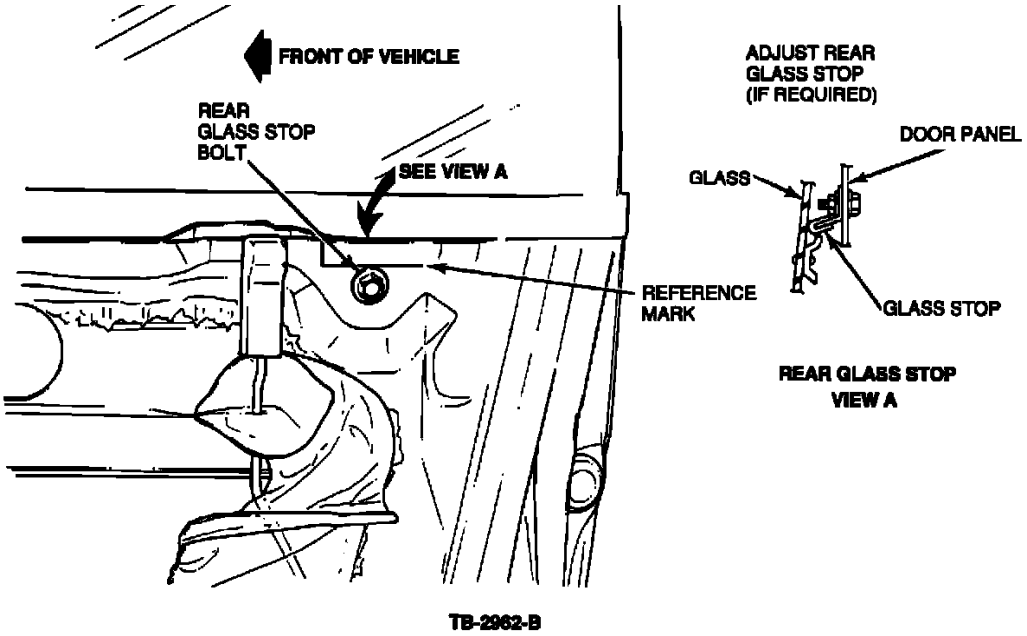

Figure 6

a. With the glass in the full up position, close the door until the top rear corner of the glass lightly touches the weatherstrip. See Figure 6.

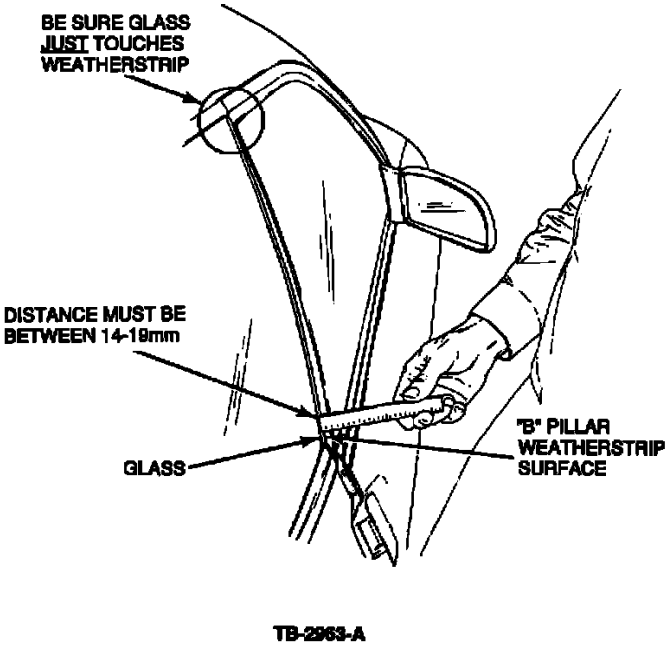

Figure 7

b. Measure the distance between the "B" pillar weatherstrip surface and the outside of the glass. See Figure 7. This distance must be between 14-19 mm.

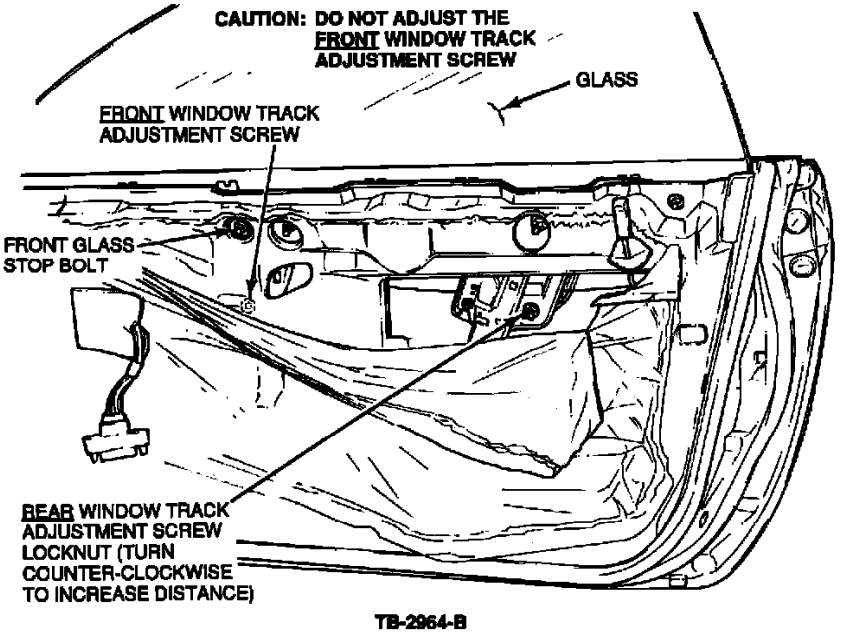

Figure 8

c. To adjust, loosen the adjustment screw locknut, Figure 8, and turn the adjustment screw counter-clockwise to increase the distance.

d. Tighten the adjustment screw locknut.

e. Recheck the distance between the "B" pillar weatherstrip surface and the outside of the glass.

7. Check the door glass front height adjustment. Adjust if necessary.

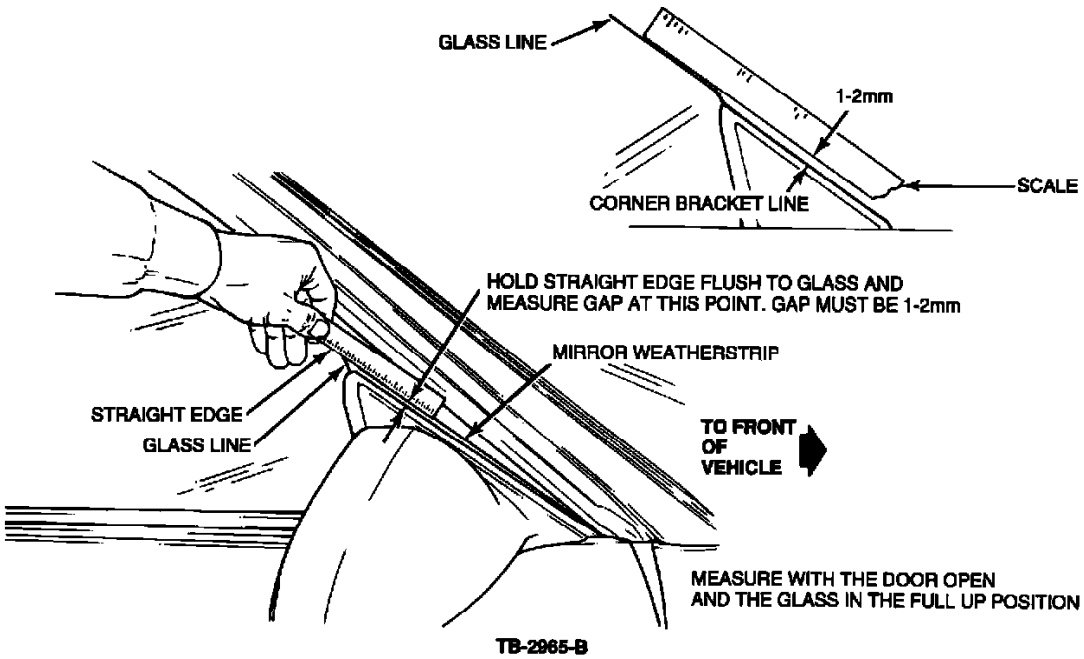

Figure 9

a. With the glass in the full up position, place a straight edge on the glass. See Figure 9.

b. Measure the gap between the straight edge and the top of the mirror weatherstrip. The gap must be 1-2 mm.

c. If adjustment is required, lower the window 1" (25.4 mm). Loosen the front glass stop bolt, Figure 8, and move the stop the distance required to obtain the 1-2 mm gap as shown in Figure 9.

d. Tighten the glass stop bolt.

e. Raise the window and recheck.

8. Check the drip edge moulding to door glass gap. Adjust if necessary.

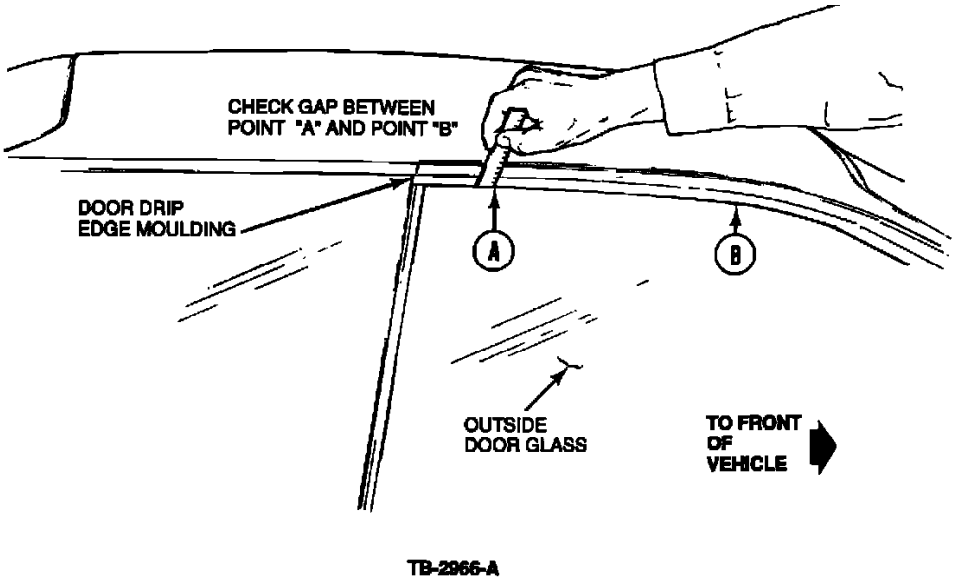

Figure 10

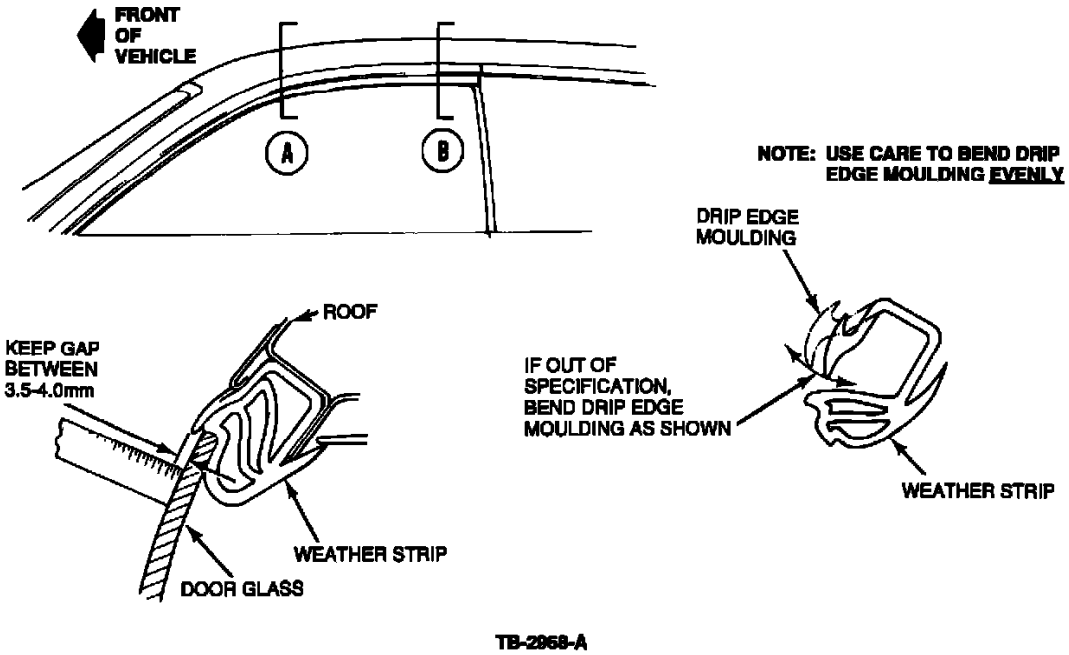

Figure 11

a. Measure the gap between the door drip edge moulding and the outside glass surface along the horizontal area of the top of the glass. See Figures 10 and 11 - points A through B. The correct gap is 3.5-4.0 mm.

b. Use your hands to adjust the drip edge moulding by applying pressure to bend the moulding to provide the required gap. Use caution to bend the drip edge moulding evenly to avoid a wavy appearance.

PART NUMBER	PART NAME	CLASS
GA2A-68AB1-A	Front Door Panel Fastener (3 Req.)	C
F1CZ-58239A42-A	Bottom/Rear Door Panel Fastener (4 Req.)	C

Parts Block

OTHER APPLICABLE ARTICLES: NONE
SUPERSEDES: 93-22-1
WARRANTY STATUS:
Eligible Under The Provisions Of Bumper To Bumper Warranty Coverage. Adjustments & Alignments Are Covered For 12 Months/12,000 Miles

OPERATION	DESCRIPTION	TIME
940504AT	Check And Adjust Door And Striker Only - Both Doors	0.4 Hr.
940504A	Check And Adjust Door And Striker Only - One Door	0.3 Hr.
940504BT	Check And Adjust Glass Only - Both Doors	0.9 Hr.
940504B	Check And Adjust Glass Only - One Door	0.5 Hr.
940504CT	Check And Adjust Door And Door Glass - Both Doors	1.1 Hr.
940504C	Check And Adjust Door And Door Glass - One Door	0.6 Hr.

DEALER CODING

BASIC PART NO.	CONDITION CODE
7021778	36

OASIS CODES: 102000, 110000, 190000, 701000

Technical Service Bulletin # **97-19-1** Date: **970915**

Door Glass - Water Leaks/Wind Noise

Article No.
97-19-1

1993 Ford Probe L4-121 2.0L DOHC VIN A MFI

09/15/97

^ DOOR - FRONT - GLASS CLOSURE ON TOP OF DRIP RAIL

^ GLASS - FRONT DOOR - ADJUSTMENT PROCEDURE

^ LEAKS - WATER - FRONT DOOR GLASS

^ WINDNOISE - FRONT DOOR GLASS

FORD:
1993-97 PROBE

This TSB article is being republished in its entirety to expand on model year coverage and to include a step for checking weatherstrip deformation between A- and B-pillars.

ISSUE:
The 1993-97 Probe Service Manuals do not provide a clear procedure for adjusting the front door glass for windnoise, water leaks, window stutter/jumping and door-closure-on-top-of-the-drip-rail concerns.

ACTION:
Use the following front door glass adjustment procedure and specifications to correct door glass windnoise, water leaks, window stuffer/jumping and door glass-closure-on-top-of-the-drip-rail concerns.

PART NUMBER	PART NAME
GA2A-68AB1-A	Front Door Panel Fastener (3 Req'd.)
F1CZ-58239A42-A	Bottom/Rear Door Panel Fastener (4 Req'd.)

OTHER APPLICABLE ARTICLES: NONE

SUPERSEDES: 96-2-1

WARRANTY STATUS: Eligible Under The Bumper Warranty Coverage
Vehicles - Adjustments And Alignments Are Covered For 12 Months/12,000 Miles For 1993-94 Model Year Vehicles

OPERATION	DESCRIPTION	TIME
971901AT	Check And Adjust Door Striker Only - Both Doors	0.4 Hr.
971901A	Check And Adjust Door Striker Only - One Door	0.3 Hr.
971901BT	Check And Adjust Striker And Door Glass - Both Doors	1.1 Hr.
971901B	Check And Adjust Striker And Door Glass One Door	0.6 Hr.
971901CT	Check And Adjust Door Glass - Both Doors	0.9 Hr.
971901C	Check And Adjust Door Glass - One Door	0.5 Hr.
971901DT	Check And Reposition Weatherstrip - Both Doors	0.4 Hr.
971901D	Check And Reposition Weatherstrip - One Door	0.3 Hr.
971901ET	Check And Repair Weatherstrip Between A- And B-Pillars - Both Sides - Vehicles Built After 9/24/96	0.2 Hr.
971901E	Check And Repair	0.1 Hr.

Weatherstrip Between A-
And B-Pillars - One Side -
Vehicles Built After 9/24/96

DEALER CODING

BASIC PART NO.	CONDITION CODE
6621778	12

OASIS CODES: 102000, 110000, 190000, 701000, 702000, 702100, 702300

Specifications

The specifications provided in this TSB article have ranges because individual vehicles may vary based on how the door fits on the car body. It may be necessary to change the door glass adjustments to the high or low end of the specifications to correct the concern on your vehicle.

NOTE:

IT IS **IMPORTANT** THAT EACH STEP IN THIS TSB ARTICLE BE PERFORMED COMPLETELY AND IN PROPER SEQUENCE. PROPER DOOR GLASS ALIGNMENT IS CRITICAL TO ITS FIT AND FUNCTION.

Front Door Glass Adjustment Procedure

PROCEDURE

1. Check the door and striker for correct adjustment. Repair as necessary. Refer to the appropriate Probe Service Manual, Sections 01-03 and 01-14A, for service details.

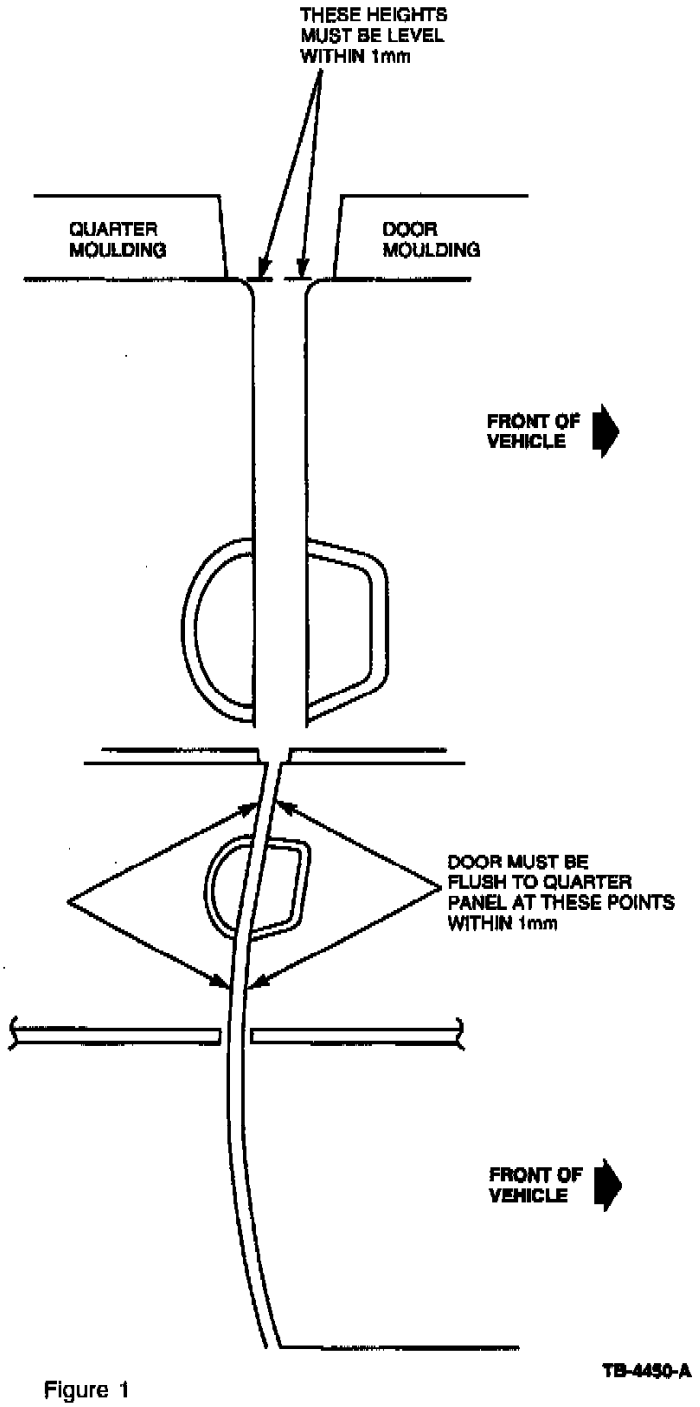

Figure 1

NOTE:

DOOR HEIGHT MUST BE LEVEL WITH QUARTER PANEL AT TOP OF THE DOOR WITHIN 1 mm. DOOR MUST ALSO BE FLUSH WITH QUARTER PANEL WITHIN 1 mm AT POINTS ABOVE DOOR HANDLE AND AT THE MIDDLE OF THE DOOR (FIGURE 1).

Door Panel Removal and Installation

All door glass measurements can be made without removing the door panel. Remove the door panel if adjustments need to be made.

NOTE:

IT IS NOT NECESSARY TO REMOVE THE DOOR GLASS TO PERFORM ANY OF THE FOLLOWING ADJUSTMENTS. HOWEVER, IF FOR OTHER REASONS THE DOOR GLASS NEEDS TO BE REMOVED, DO NOT REMOVE THE DOOR GLASS GUIDE BRACKETS FROM THE GLASS. THESE ARE NOT ADJUSTABLE AND ARE VERY DIFFICULT TO REINSTALL PROPERLY.

Door Trim Panel Removal

2. DOOR TRIM PANEL REMOVAL

   a. Remove side view mirror inside cover.

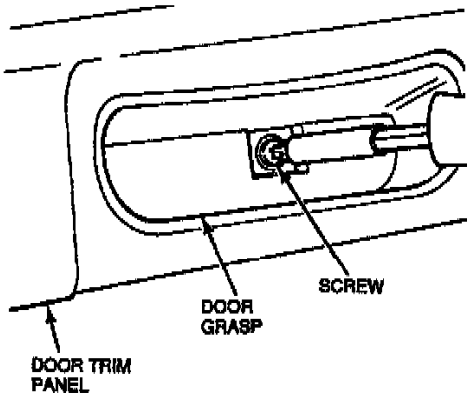

Figure 2 TB-3160-A

b. Remove the door grasp screw (Figure 2) - 1993-94 model years only.

c. Remove the door grasp - 1993-94 model years only.

d. If equipped, remove the window regulator handle.

e. If equipped, disconnect the switch panel electrical connectors.

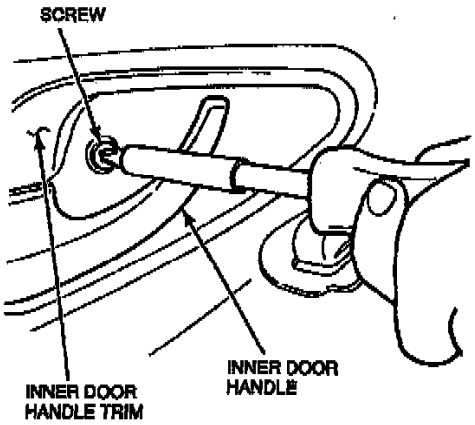

Figure 3 TB-3161-A

f. Remove the inner door handle trim screw (Figure 3) - 1993-94 model years only.

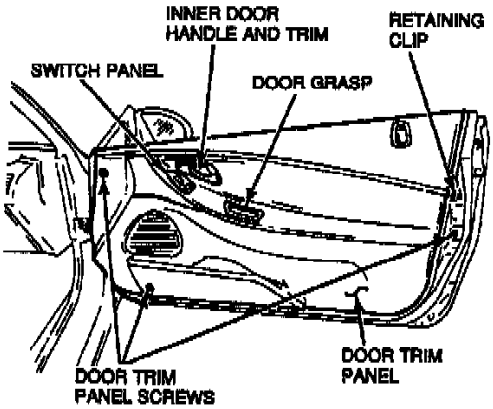

Figure 4 TB-3162-A

g. Remove the three (3) remaining door trim panel screws and one (1) retaining clip (Figure 4) - 1993-94 model years only.

h. Carefully pull the door trim panel away from the door to disengage the clips.

i. Guide the inner door handle trim through the door trim panel.

j. Remove the door trim panel.

Door Trim Panel Installation

To install, reverse the removal procedure. The door clips must be replaced to prevent door panel squeaks and rattles. Refer to the parts listing for

part number information.

NOTE:
THE FOLLOWING STEPS MUST BE PERFORMED IN THE LISTED SEQUENCE.

3. Check door glass pitch adjustment:

   a. Check the clearance between the quarter glass and door glass along the B-pillar. The correct gap should be 9-13 mm (0.35-0.51").

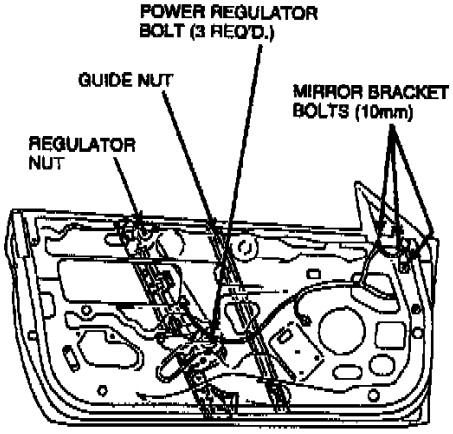

Figure 5 TB-4451-A

   b. If adjustment is required, mark and loosen the top regulator and guide 12 mm nuts (for power windows loosen the three (3) power regulator 10 mm bolts), and reposition the door glass (Figure 5).

   c. Torque the regulator nut to 19-25 N.m (14-18 lb-ft) and, if equipped, the three (3) power regulator bolts to 7-9 N.m (62-80 lb-in).

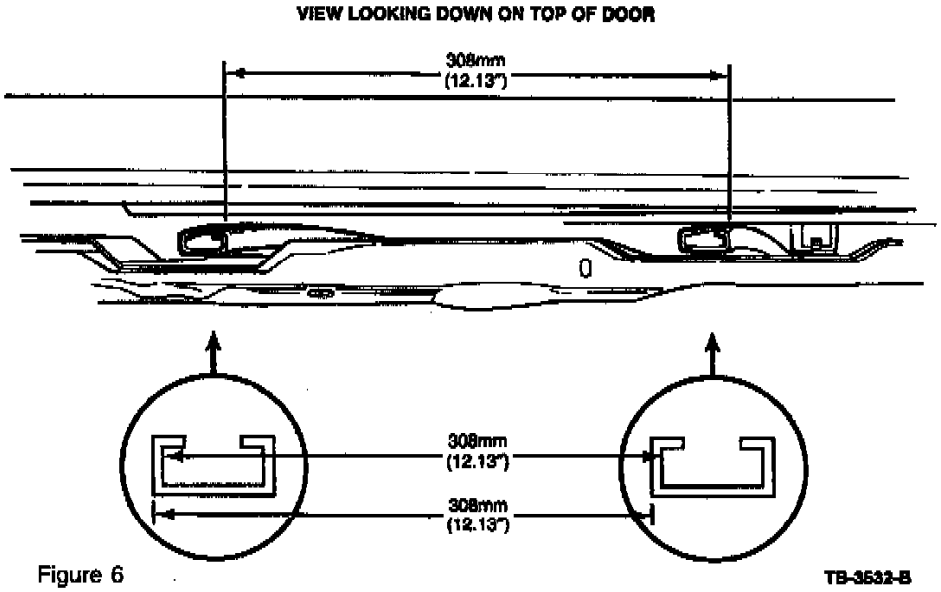

Figure 6 TB-3532-B

   d. Check the door glass pitch adjustment by measuring from the front edge of the regulator channel to the front edge of the glass guide channel (Figure 6). The measurement should be 308 mm (12.13"). To correct, loosen the front glass guide and adjust.

   e. Tighten the glass guide channel and recheck measurement.

   f. Check lower regulator and guide 12 mm nuts for proper torque - 19-25 N.m (14-18 lb-ft).

   g. Recheck the quarter glass-to-door glass gap.

4. Check the door glass rear height adjustment. Adjust if necessary.

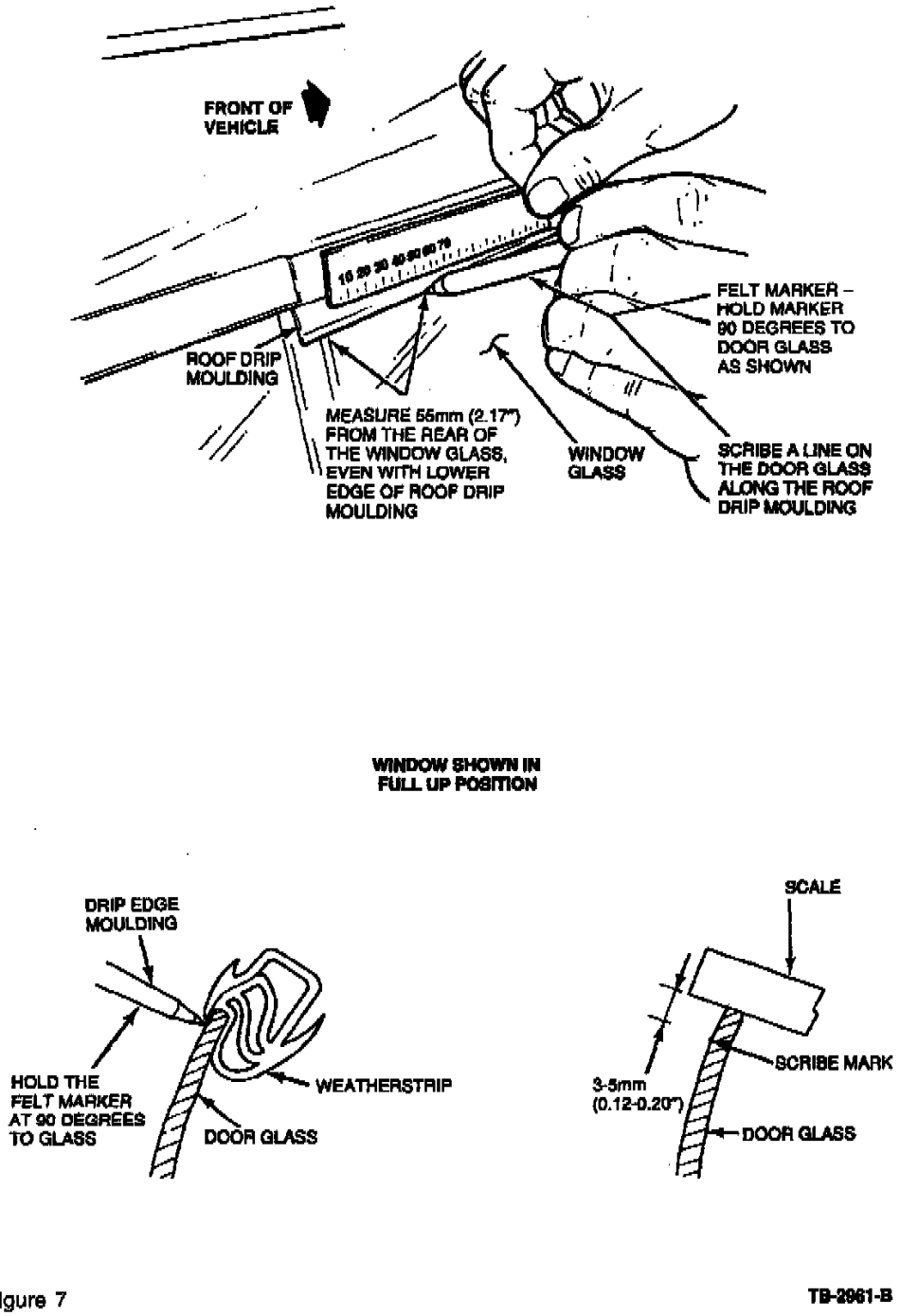

Figure 7 TB-2961-B

a. With the door glass in the full up position and the door closed, draw a line along the top of the glass with a felt marker. Locate the line 55 mm (2.17" from the rear of the glass even with the lower edge of the roof drip moulding (Figure 7). The mark must be 3-5 mm (0.12-0.20") from the top edge of the glass.

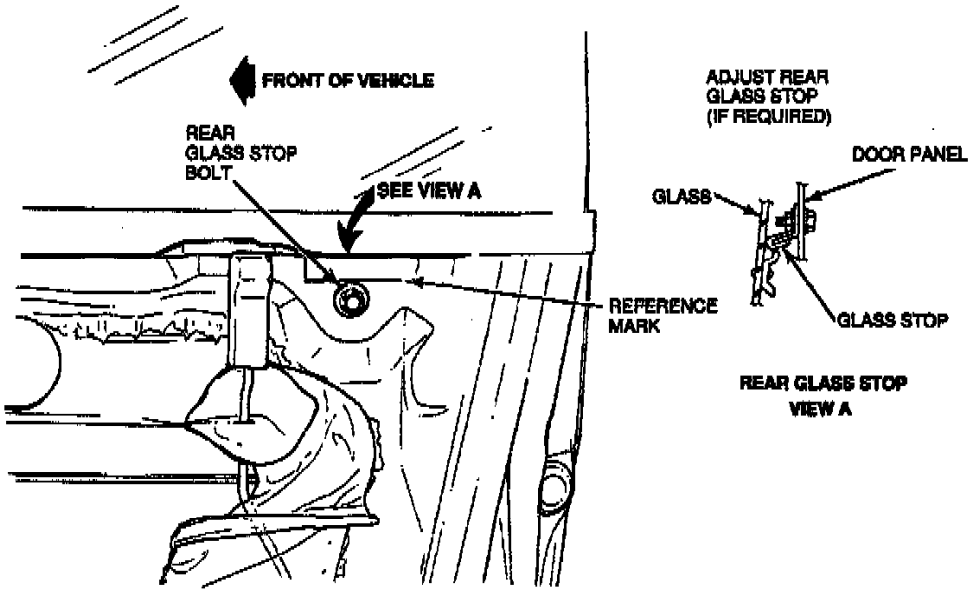

Figure 8 TB-2962-B

b. If adjustment is required, lower the door glass 25.4 mm (1") and make a reference mark on the door (Figure 8).

c. Loosen the glass stop bolt just enough to be able to slide the stop and move the stop the same distance the mark is out of specification. Example: If the glass is 1.0 mm too high, lower the stop 1.0 mm.

NOTE:
STOPPER MAY ROTATE DURING TIGHTENING WHICH CAN CHANGE THE GLASS HEIGHT.

d. Tighten the glass stop bolt.

e. Raise the door glass and recheck.

5. Check the door glass rear inboard and outboard adjustment. Adjust if necessary.

NOTE:
DO NOT ADJUST THE FRONT WINDOW TRACK INBOARD AND OUTBOARD ADJUSTMENT SCREW.

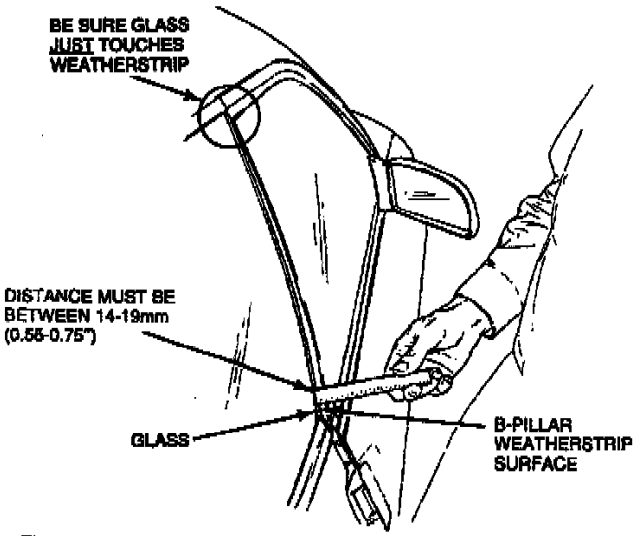

Figure 9 TB-2963-B

a. With the door glass in the full up position, close the door until the top rear corner of the glass lightly touches the weatherstrip (Figure 9).

b. Measure the distance between the B-pillar weatherstrip surface and the outside of the glass (Figure 9). This distance must be between 14-19 mm (0.55-0.75").

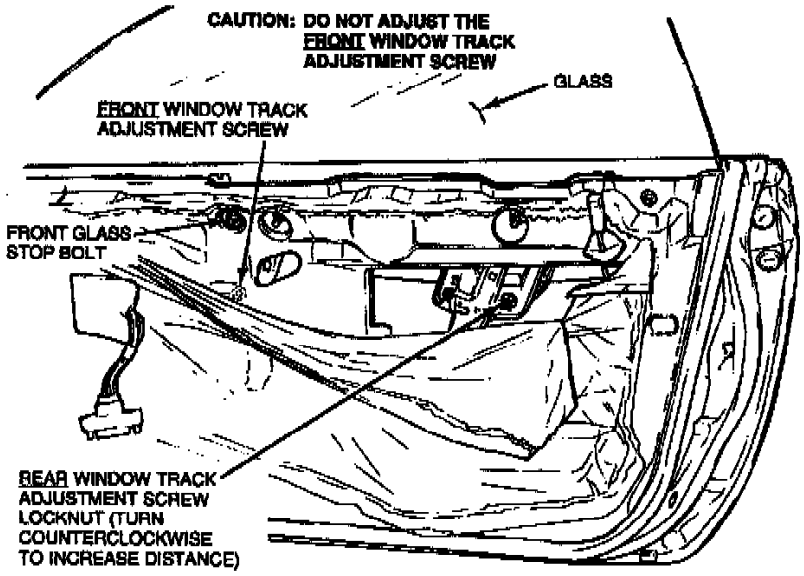

Figure 10 TB-2964-C

c. To adjust, loosen the adjustment screw locknut (Figure 10) and turn the adjustment screw counterclockwise to increase the distance.

d. Tighten the adjustment screw locknut.

e. Recheck the distance between the B-pillar weatherstrip surface and the outside of the glass.

6. Check the door glass front height adjustment. Adjust if necessary.

a. With the door closed, check to see if the top edge of the mirror bracket is under the weatherstrip lip.

b. If adjustment is required, loosen the three (3) 10mm mirror bracket bolts (Figure 5), and move the mirror bracket rearward and down as necessary.

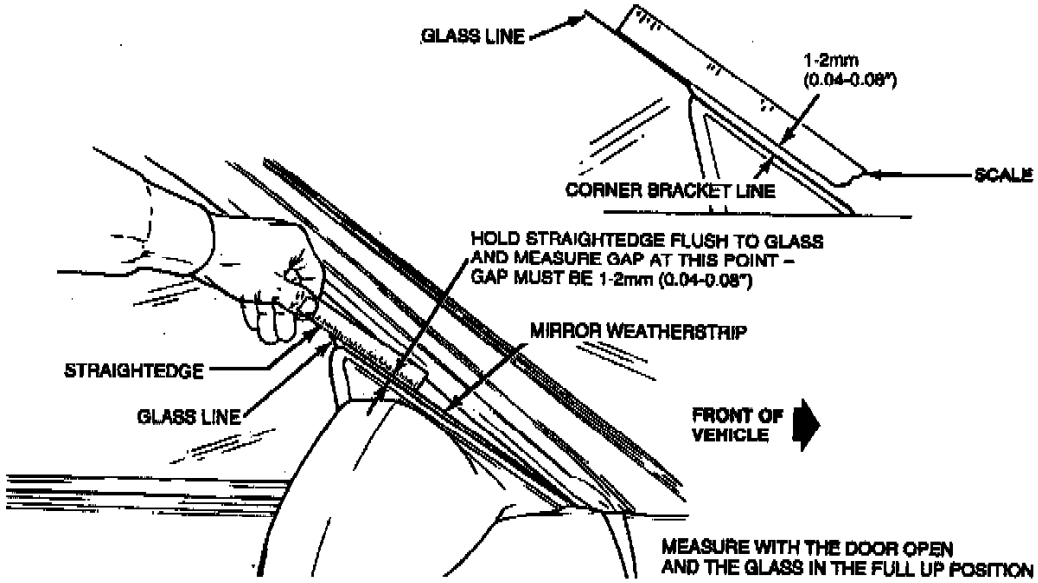

Figure 11 TB-2965-C

c. With the glass in the full up position, place a straightedge on the glass (Figure 11).

d. Measure the gap between the straightedge and the top of the mirror weatherstrip. The gap must be 1-2 mm (0.04-0.08").

e. If adjustment is required, lower the window 25.4 mm (1"). Loosen the front glass stop bolt (Figure 10) and move the stop the distance required to obtain the 1-2 mm gap (0.04-0.08") (Figure 11).

f. Tighten the glass stop bolt.

g. Raise the window and recheck.

7. Check the drip edge moulding-to-door glass gap. Adjust if necessary (1993 model year only).

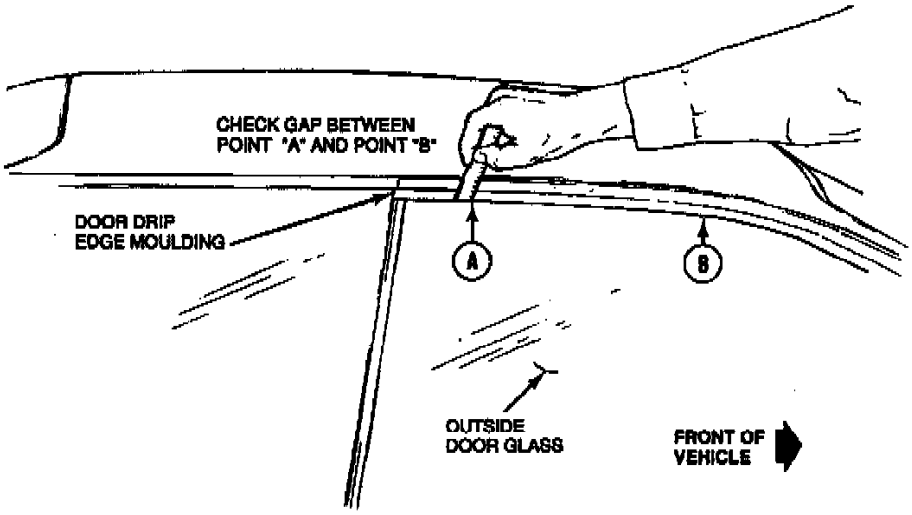

Figure 12

TB-2966-B

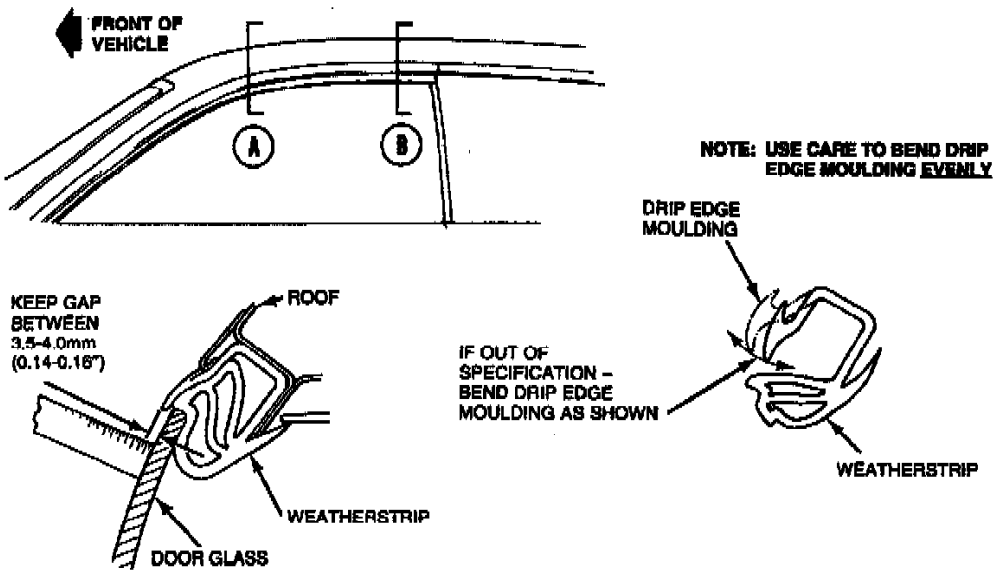

Figure 13

TB-2969-B

a. Measure the gap between the door drip edge moulding and the outside glass surface along the horizontal area of the top of the glass (Figures 12 and 13 - points A through B). The correct gap is 3.5-4.0 mm (0.14-0.16").

b. Use your hands to adjust the drip edge moulding by applying pressure to bend the moulding to provide the required gap. Use caution to bend the drip edge moulding evenly to avoid a wavy appearance.

8. Check weatherstrip for deformation at top corner of B-pillar. If the weatherstrip is dimpled inward, perform the following steps:

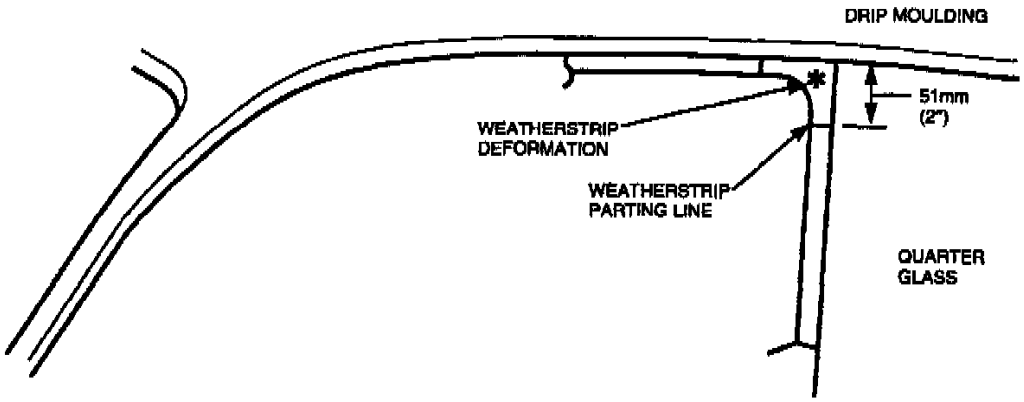

Figure 14

TB-4452-A

a. At top of B-pillar, measure from the bottom edge of drip moulding down 51 mm (2"). Mark the quarter glass (Figure 14).

b. Remove the top half of the weatherstrip from the B-pillar.

c. Remove the top weatherstrip retaining pin from the weatherstrip and discard the pin.

d. Seal the top weatherstrip retaining pin hole in the B-pillar.

e. Grab the weatherstrip in front of the corner and pull the weatherstrip rearward around the radius and down the B-pillar until the parting line on the weatherstrip lines up with the 51mm (2") mark on the quarter glass.

f. Reseat the remaining portion of the weatherstrip into the B-pillar. Evenly distribute the weatherstrip slack down the entire length of the B-pillar.

NOTE:
FOR VEHICLES BUILT AFTER 9/24/96, PERFORM STEP 9.

9. Check weatherstrip for deformation between A- and B-pillars. If weatherstrip is dimpled inward, perform the following Steps 9a-9c:

a. Pull outer edge of weatherstrip between the A- and B-pillars forward until screw heads that attach the weatherstrip to the body are visible.

b. Attach a piece of self-adhesive back foam approximately 400 mm long by 15 mm high by 3 mm thick to the backside of the weatherstrip where the dimple has occurred.

c. Tuck the weatherstrip back into place and check that the dimple has disappeared. If dimple is still present repeat Steps 9a and 9b and add additional foam until the dimple has completely disappeared.

10. Road test vehicle at highway speeds and perform Steps 9a and 9b to verify repair.

a. Turn blower motor on at various speeds and listen for air leaks.

b. Cycle door glass down and up to verify that the door glass reseals.

Technical Service Bulletin # **94172** Date: **940824**

Rear View Mirror - Detaches From Windshield

Article No.
94-17-2

08/24/94

REAR VIEW MIRROR - DETACHES FROM WINDSHIELD - SERVICE TIP

FORD:
1990-94 TEMPO
1990-95 CROWN VICTORIA, ESCORT, MUSTANG, TAURUS, THUNDERBIRD
1992-95 PROBE 1995 CONTOUR

LINCOLN-MERCURY:
1990-92 MARK VII
1990-94 TOPAZ
1990-95 CONTINENTAL, COUGAR, GRAND MARQUIS, SABLE, TOWN CAR
1991-95 TRACER
1993-95 MARK VIII
1995 MYSTIQUE

LIGHT TRUCK:
1990-95 AEROSTAR, BRONCO, ECONOLINE, EXPLORER, F-150-350 SERIES, RANGER
1993-95 VILLAGER
1995 WINDSTAR

ISSUE:
The rear view mirror assembly may detach from the windshield. This may be caused by:

^ High humidity conditions, which may cause the production adhesive to fail

^ Improper cleaning of the glass and the mirror button during repair process may cause the Rear View Mirror Adhesive service chemical to fail, resulting in repeat repairs

^ Use of expired or improperly stored service kits

^ Improper use of service kit.

ACTION:
Review the service kit expiration date, and use the revised cleaning and application procedures. Refer to the following procedures for service.

WARNING:
USE WITH ADEQUATE VENTILATION. AVOID EYE CONTACT AND CONTACT WITH SKIN.

SERVICE KIT STORAGE AND EXPIRATION PROCEDURES

1. Avoid prolonged storage of Rear View Mirror Adhesive kits. Over time, the adhesive performance will degrade. Excessive storage temperatures and exposure to sunlight will also degrade the unused material. For these reasons, Ford recommends:

   ^ Rotating stock, using the oldest material first

   ^ Storing the adhesive kits in a cool, dry, dark place

   ^ Avoiding placement of display racks in direct sunlight

   ^ Using only repair kits that are less than one (1) year old.

HOW TO READ FORD REAR VIEW MIRROR ADHESIVE (D9AZ-19554-CA) DATE CODES

EXAMPLE: 3CA262

YEAR OF MANUFACTURE:	FIRST CHARACTER (3) IS LAST DIGIT OF YEAR, I.E., 1993
MONTH OF MANUFACTURE:	SECOND CHARACTER (C) CODES MONTH OF YEAR (MARCH). SEE CHART BELOW FOR INTERPRETATION.

LAST FOUR CHARACTERS (A262) SIGNIFY BATCH NUMBER AND PACKAGING LOCATION.

THE ADHESIVE WAS MANUFACTURED IN MARCH, 1993.

MONTHLY CODE GUIDE

A - JANUARY	E - MAY	I - SEPTEMBER
B - FEBRUARY	F - JUNE	J - OCTOBER
C - MARCH	G - JULY	K - NOVEMBER
D - APRIL	H - AUGUST	L - DECEMBER

TB-3844-A

Figure 1

2. You can determine the age of the material in the kit by checking the date code crimped in the plastic seal at the bottom of the adhesive squeeze tube. The date code format is shown in Figure 1.

   ^ The first character is a digit representing the last digit of the year the material was manufactured.

   ^ The second character is a letter representing the month of manufacture.

   ^ The remaining characters indicate the location where the material was produced.

LOCATION OF "USE BY" DATES

REAR VIEW MIRROR ADHESIVE

A HIGH STRENGTH ADHESIVE FOR MIRROR BRACKET BONDING

DIRECTIONS FOR APPLICATION

1. Make sure glass,bracket and adhesive kit are at least at room temperature (65–75°F, 18.3–23.9°C).
2. Mark original location of bracket on outside of windshield using a wax pencil.
3. Thoroughly clean bonding surfaces of glass and bracket to remove old adhesive. Use mild abrasive cleanser on glass and fine sandpaper on bracket to lightly roughen surface. Wipe clean with alcohol moistened cloth.
4. Crush accelerator vial and apply accelerator to bonding surface of bracket and windshield. Let dry for 3 minutes.
5. Apply a small amount of adhesive to bracket. Spread adhesive evenly over entire bonding surface.
6. Position the bracket in its proper location on the windshield and press firmly for 1 minute.
7. Allow 5 minutes for adhesive to cure and install rear view mirror to bracket.

WARNING

VAPOR HARMFUL. EYE IRRITANT AND MAY IRRITATE SKIN.

Adhesive contains Acrylic Acid and Methacrylic Ester. Accelerator contains Trichloroethylene. Use with adequate ventilation. Avoid breathing vapor. Avoid eye contact and contact with skin. In case of eye contact, flush eyes with water for 15 minutes and get medical attention. In case of skin contact, wash with soap and water. Do not expose to heat or store above 120°F (49°C).

KEEP BOTH PRODUCTS OUT OF REACH OF CHILDREN

D9AZ-19554-CA

DISTRIBUTED BY:
FORD MOTOR COMPANY, DEARBORN, MICHIGAN 48121
PRINTED IN USA. SS/658 L1509A REV. 5-86
CPR © FORD MOTOR COMPANY, 1986

BLISTER CARD

USE BY
3/15/94

0 84422 09796 1

TC-486

ONE PACKAGE OF 10 PCS

D9AZ-19554-CA

REARVIEW MIRROR ADHESIVE

SHIPPING BOX

USE BY 031594

DO NOT HEAT OR STORE AT TEMPERATURE ABOVE 120°F (49°C)

TB-3645-A

Figure 2

This date represents the date the material was manufactured. Ford recommends that material older than one year old not be used to install interior rear view mirror assemblies. To enable dealership personnel to more easily determine the suitability of the material, the individual kits and the shipping box will be stamped with a "Use By" date. The new "Use By" label will be on all products made after June, 1994. Figure 2 shows the location of the "Use By" date on the back of each individual blister card and the shipping box.

SERVICE PROCEDURES

NOTE:

THE FOLLOWING PROCEDURES SUPERSEDE THE INSTRUCTIONS ON THE BACK OF THE ORIGINAL REAR VIEW MIRROR ADHESIVE PACKAGE.

NOTE:

THE MIRROR BUTTON IS OFTEN CALLED A BRACKET, AND THE WINDSHIELD IS SOMETIMES REFERRED TO AS GLASS.

1. Make sure glass, bracket, and rear view mirror adhesive are at room temperature (65-75~F, 18-24~C).

^ If possible, the repair should be performed indoors. Do not perform the repair in direct sunlight.

^ If you must work outside, park the vehicle in a shaded area out of the direct sunlight.

^ The adhesive will not bond at temperatures less than 45~F (7~C), and will bond too quickly in direct sunlight.

2. Mark original location of bracket on outside of windshield with any appropriate marking tool (e.g., crayon, magic marker) before you begin.

NOTE:
SURFACES MUST BE CLEAN FOR PROPER BONDING TO OCCUR.

3. Use the following steps to ensure proper cleaning of glass and button:

   a. Carefully remove thick layers of the old adhesive from the glass and the mirror button using a single edge razor blade.

   b. Using a clean cloth saturated with isopropyl alcohol (obtain 70% isopropyl rubbing alcohol locally), rub the glass and the mirror button to remove any remaining old adhesive. Soaking the mirror button in isopropyl alcohol may speed the adhesive removal process.

   c. Rub the mirror button and the glass with a non-abrasive bathroom cleanser (obtain locally) to ensure all traces of the old adhesive have been removed.

NOTE:
IT IS ESSENTIAL THAT NO TRACES OF CLEANSER OR ADHESIVE REMAIN ON THE GLASS OR THE MIRROR BUTTON.

   d. Wipe the glass and the mirror button with a new, clean cloth saturated with isopropyl alcohol (or rubbing alcohol).

4. The accelerator vial contains a priming agent which speeds the adhesive curing process.

   a. Grasp the paper wrapper around the vial and squeeze until the vial inside the paper wrapper breaks, releasing the accelerator to the felt tip on the end of the cylinder.

   b. Cover the entire bonding area by applying a barely visible, but uniform, film of accelerator to an area larger than the mirror button "footprint" on the glass and to the entire mirror button bonding surface.

   c. Let the accelerator dry for 3 minutes.

NOTE:
DO NOT TOUCH THE PRIMED SURFACES.

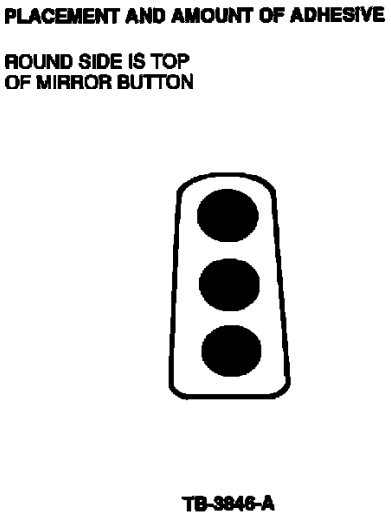

Figure 3

5. Squeeze only three (3) drops of adhesive in a line from top to bottom on the mirror button (Figure 3). It is not necessary to spread the adhesive.

NOTE:
MAKE SURE THE BUTTON IS POSITIONED PROPERLY FOR STEP 6. REPOSITIONING THE BUTTON, ONCE IN CONTACT WITH GLASS, WILL CAUSE THE ADHESIVE TO FAIL.

6. Position the mirror button in its proper location on the windshield (the rounded edge is pointing up). Press firmly for one full minute to ensure complete bonding. If mirror button is not firmly attached after more than one minute, remove button and repeat Steps 2 through 5.

7. Allow 5 minutes for adhesive to cure (with temperatures above 65~F, 18~C) and install rear view mirror to button. If temperature is between 45-65~F (7-18~C), use masking tape to firmly hold the button to the windshield and allow the adhesive to cure for at least 15 minutes.

PART NUMBER	PART NAME	CLASS
D9AZ-19554-CA	Rear View Mirror Adhesive	B

OTHER APPLICABLE ARTICLES: NONE
WARRANTY STATUS:
Eligible Under Basic Warranty Coverage For 1990 Luxury; 1990 And 1991 Non-Luxury, All Others Eligible Under The Provisions Of Bumper To Bumper Warranty Coverage

OPERATION	DESCRIPTION	TIME
941702A	Re-Attach Rear View Mirror	0.5 Hr.

DEALER CODING

BASIC PART NO.	CONDITION CODE
17698	03

OASIS CODES: 102000, 103000, 107000

Technical Service Bulletin # **94161** Date: **940810**

Air Dam - Skirt Loose At Front Crossmember

Article No.
94-16-1

08/10/94

^ AIR DAM SKIRT (VALANCE) - LOOSE - AT FRONT CROSSMEMBER - BUILD DATES 4/16/92 TO 2/21/94

^ LOOSE AIR DAM SKIRT (VALANCE) - AT FRONT CROSSMEMBER - BUILD DATES 4/16/92 TO 2/21/94

FORD:
1993-94 PROBE

ISSUE:
The front air dam skirt (valance) may be loose at the front crossmember. This may be caused by loose or missing attaching grommets (thereby, only one bolt may be retaining the air dam skirt). New production has added an additional bolt to the skirt assembly.

ACTION:
To prevent/repair this problem, refer to the following procedure.

REPAIR PROCEDURE:

Replace the factory installed grommets with aftermarket license plate nuts, screws and washers.

1. Insert nylon nuts into the crossmember.

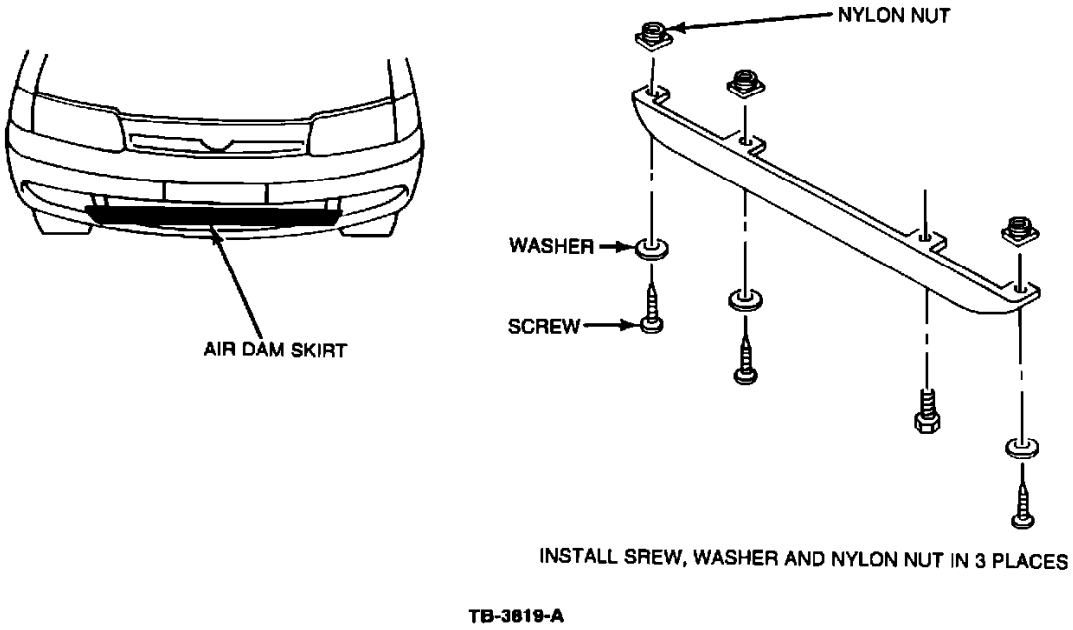

Figure 1

2. Install the air dam skirt by using washers and screws as shown in Figure 1.

Ford recommends the use of Auveco fasteners. These fasteners are available through Sarjo (1-800-447-2756).

PART NUMBER	PART NAME	CLASS
Call Sarjo (1-800-447-2756) 100 Piece Min. Order		
8606	Flat Washer	
9603	Screw	
11719	Nylon Nut	

Parts Block

OTHER APPLICABLE ARTICLES: NONE
WARRANTY STATUS:
Eligible Under The Provisions Of Bumper To Bumper Warranty Coverage

OPERATION	DESCRIPTION	TIME
941601A	Remove Grommets And Replace With Nylon Screws And Nuts	0.3 Hr.

DEALER CODING

BASIC PART NO.	CONDITION CODE
17626	57

OASIS CODES: 108000, 402000

Technical Service Bulletin # **93212** Date: **931013**

Ashtray Cover - Falls Into Console

Article No.
93-21-2

10/13/93

ASHTRAY - COVER - FALLS INTO CENTER CONSOLE - GT AND BASE MODELS BUILT THROUGH 3/31/93

FORD:
1993 PROBE

This TSB article is being republished in its entirety to correct the base part numbers.

ISSUE:

1993 Ford Probe L4-121 2.0L DOHC VIN A MFI

The ashtray cover may fall into the center console. This occurs after pressure is accidentally applied on the ashtray door when it is in the open position.

PART NUMBER	PART NAME	CLASS
F32Z-61045A36-N	Center Console - Ebony	C
F32Z-61045A36-P	Center Console - Red	C
F32Z-61045A36-Q	Center Console - Blue	C
F32Z-61045A36-R	Center Console - Gray	C
F32Z-61045A36-S	Center Console - Ebony (Includes Armrest)	C
F32Z-61045A36-T	Center Console - Red (Includes Armrest)	C
F32Z-61045A36-U	Center Console - Blue (Includes Armrest)	C
F32Z-61045A36-V	Center Console - Gray (Includes Armrest)	C

ACTION:
Install a revised center console which has a new ashtray cover stop added which prevents it from falling out. Refer to the 1993 Probe Service Manual, Page 01-12-7, for removal and installation procedures. Refer to the Parts Block in this article for correct parts usage.

OTHER APPLICABLE ARTICLES: NONE
SUPERSEDES: 93-16-1
WARRANTY STATUS:
Eligible Under Bumper To Bumper Warranty Coverage

OPERATION	DESCRIPTION	TIME
932102A		0.5 Hr.

DEALER CODING

BASIC PART NO.	CONDITION CODE
70045A36	33

OASIS CODES: 107000

Technical Service Bulletin # **98-20-10** Date: **981012**

Exhaust System - Buzzing/Rattling Noise

Article No.
98-20-10

10/12/98

^ EXHAUST SYSTEM - LOOSE CATALYST OR MUFFLER HEAT SHIELDS

^ NOISE - "BUZZING" OR "RATTLING" - LOOSE CATALYST OR MUFFLER HEAT SHIELDS

FORD:
1993 FESTIVA
1993-94 TEMPO
1993-97 PROBE, THUNDERBIRD
1993-99 CROWN VICTORIA, ESCORT, MUSTANG, TAURUS
1994-97 ASPIRE
1995-99 CONTOUR

LINCOLN-MERCURY:
1993-94 CAPRI, TOPAZ
1993-99 CONTINENTAL, COUGAR, GRAND MARQUIS, SABLE, TOWN CAR, TRACER
1995-99 MYSTIQUE

LIGHT TRUCK:
1993-96 BRONCO
1993-97 F SUPER DUTY, F-35O
1993-99 AEROSTAR, ECONOLINE, EXPLORER, F-150, F-250 LD, RANGER
1995-99 WINDSTAR
1997-99 EXPEDITION, MOUNTAINEER, VILLAGER
1998-99 NAVIGATOR
1999 F-250 HD, SUPER DUTY F SERIES

1993 Ford Probe L4-121 2.0L DOHC VIN A MFI

This TSB article is being republished in its entirety to include additional vehicles and to include 1999 model year vehicles.

ISSUE
A "buzzing" or "rattling" noise from the exhaust system may be caused by a loose heat shield attachment to the catalytic converter, catalytic pipes, muffler pipes and/or muffler. The noise is noticeable during normal driving conditions or at engine idle.

ACTION
Install worm clamps to secure loose heat shield attachments. Refer to the following Service Procedure for details.

SERVICE PROCEDURE

1. Inspect for loose shields. If shield(s) is missing, this TSB does not apply. Refer to the appropriate Service or Workshop Manual for repair procedures

NOTE
UNDER NO CIRCUMSTANCES SHOULD A HEAT SHIELD BE REMOVED WITHOUT REPLACEMENT BEFORE THE VEHICLE IS RETURNED TO THE CUSTOMER.

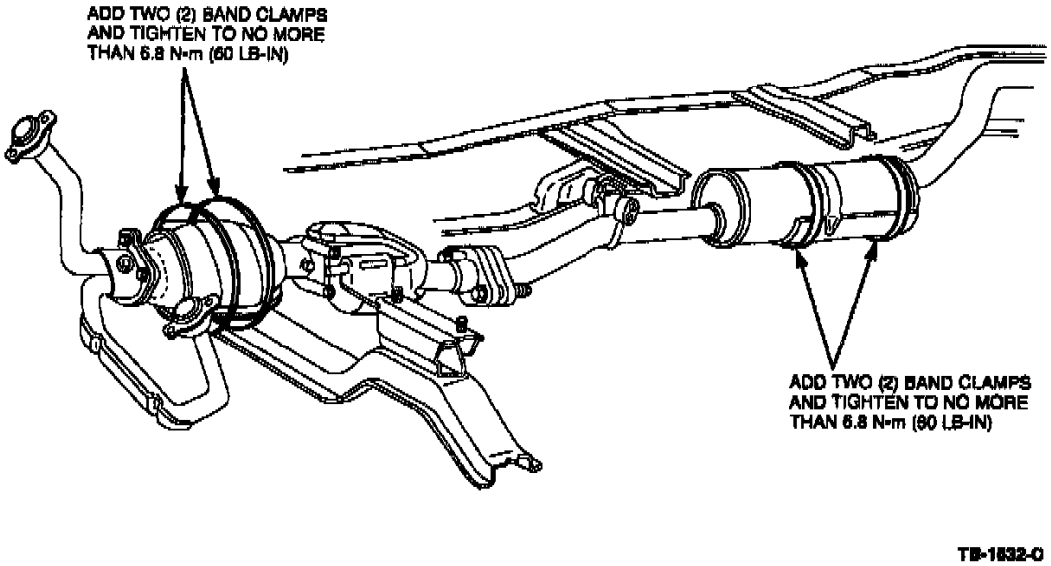

Figure 1

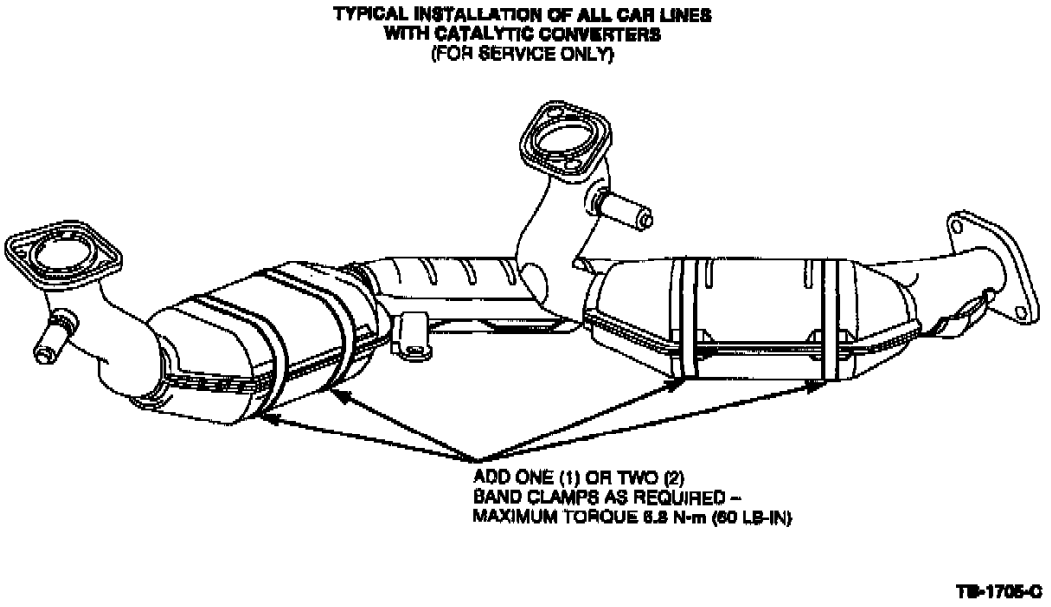

Figure 2

2. Install worm clamps to the catalytic converter, catalytic pipes, muffler pipes or muffler as shown in Figure 1 for the typical light truck and Figure 2 for the typical passenger car.

3. Align the clamps to secure the heat shield to the catalytic converter, catalytic pipes, muffler pipes or muffler as required.

4. Tighten the clamps to 6.8 N.m (60 lb-in).

5. Trim the excess "ear" of the clamp to approximately 2.54 cm (1").

PART NUMBER	PART NAME
FOTZ-5A231-A	Worm clamp (4-1/2" To 9-1/2")
W705949-S300	Worm clamp (3/4" To 4")

OTHER APPLICABLE ARTICLES: NONE

SUPERSEDES: 98-6-4

WARRANTY STATUS: Eligible Under Basic Warranty Coverage For 1991 And Prior Models Bumper To Bumper Warranty Coverage For 1992-99 Models, And Any Applicable Emissions Warranty Coverage

OPERATION	DESCRIPTION	TIME
982010A	Install One (1), Two (2), Or Four (4) Worm Clamps	0.3 Hr.

DEALER CODING

BASIC PART NO.	CONDITION CODE
5E258	33

OASIS CODES: 403000, 702000, 702100, 702200, 703000

Technical Service Bulletin # **93188** Date: **930901**

Engine - Vibration/Resonance At Idle

Article No.
93-18-8

09/01/93

^ ENGINE TRANSMITS RESONANCE DURING IDLE - VEHICLES WITH 2.0L AND AUTOMATIC TRANSAXLE

^ VIBRATION - RESONANCE DURING IDLE - VEHICLES WITH 2.0L ENGINE AND AUTOMATIC TRANSAXLE

FORD:
1993 PROBE

This TSB article is being republished in its entirety to correct the reference to "engine mount # 3" in Service Procedure Step 1 to read "Engine Mount # 2".

ISSUE:
An engine vibration and resonance may be transmitted into the vehicle's interior during idle because the # 3 engine mount is grounding out.

ACTION:
Check the clearance of the # 3 engine mount and, if necessary, shave off engine mount material which is causing the grounding out condition. Refer to the following service procedure.

INSPECTION - "QUICK CHECKS"

Before performing the repair procedure, do the following "Quick Checks" to determine if the vibration level can be effectively reduced.

1. Compare the vehicle's vibration and resonance to one or more equally equipped vehicles from the dealer inventory. Perform this comparison in DRIVE and REVERSE with the air conditioner on.

2. Perform a visual inspection of engine mount # 3 to verify that it is centered in the bracket. Refer to Step 2 in the service procedures of this article for details.

3. Check the base idle speed at normal operating temperature and, if necessary, set to 700-750 RPM per the service manual.

NOTE:
IF THE RESULTS INDICATE THE LEVEL OF VIBRATION TO BE EQUAL TO OTHER EQUALLY-EQUIPPED VEHICLES AND/OR ENGINE MOUNT # 3 IS CENTERED IN THE BRACKET, PERFORMING THE FOLLOWING REPAIR PROCEDURES WILL NOT REDUCE IDLE VIBRATION. REFER TO THE 1993 PROBE SERVICE MANUAL, SECTION 00-04, FOR ADDITIONAL NVH DIAGNOSIS INFORMATION.

SERVICE PROCEDURE

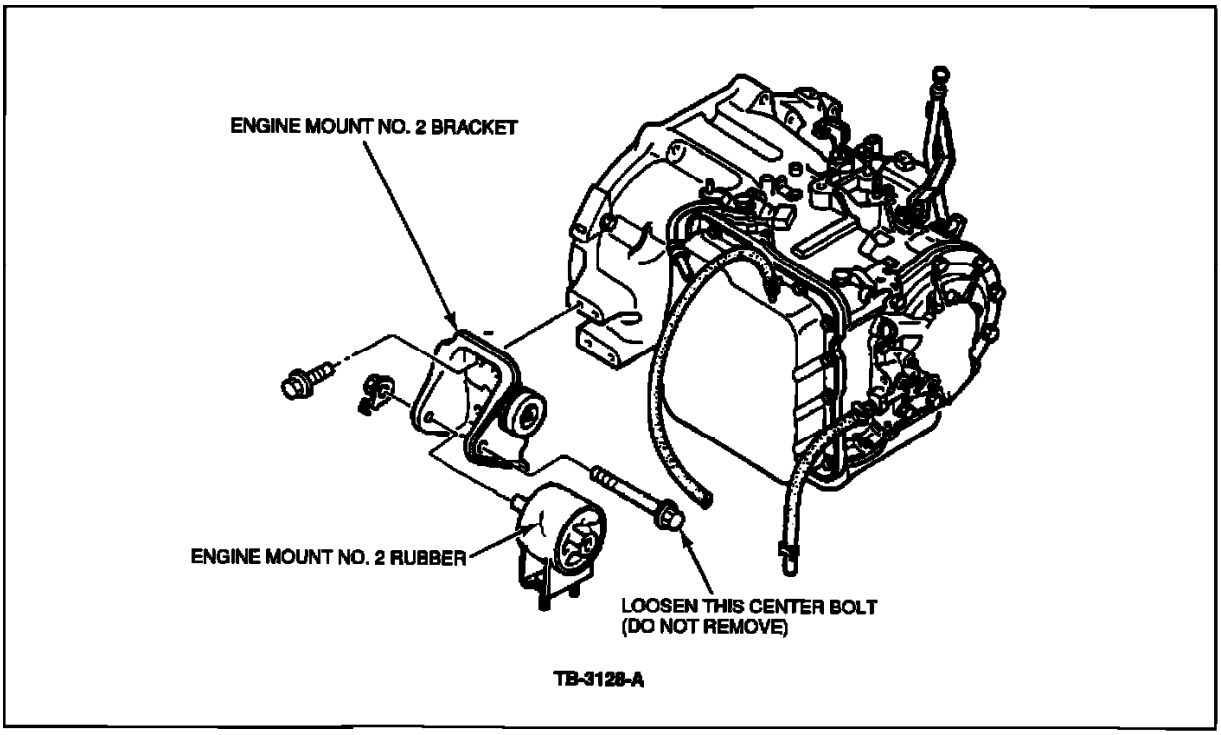

Figure 1

1. Place the vehicle on a hoist. Using a 17 mm socket, loosen (but do not remove) the center bolt that goes through engine mount # 2, Figure 1.

2. Check the clearance of engine mount # 3 against the mounting bracket. There should be clearance between the rubber mount and the bracket with the A/C load on and while in DRIVE or REVERSE. If the rubber mount contacts the bracket proceed as follows:

   a. Remove the rubber mount.

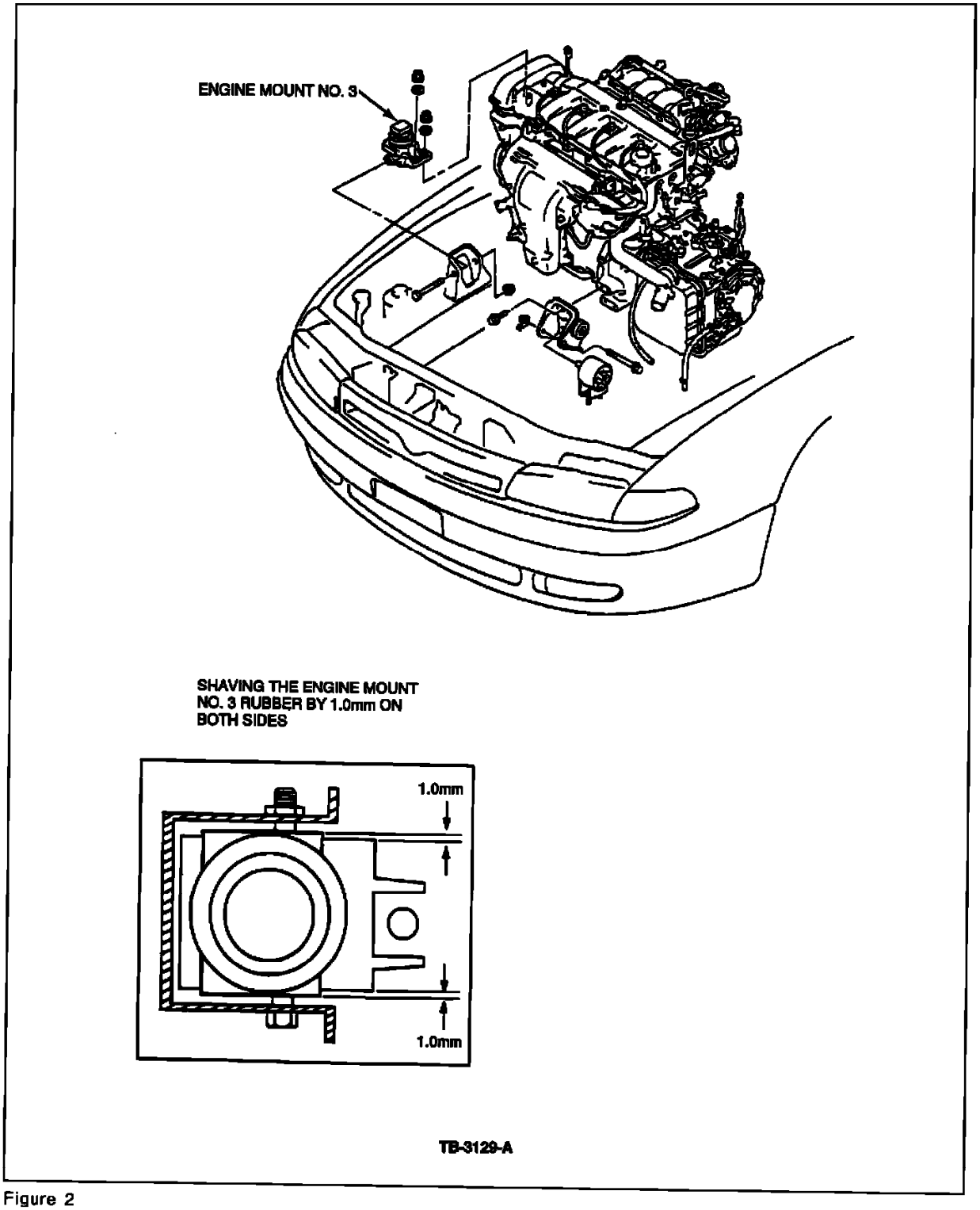

Figure 2

b. With a hacksaw or grinder, shave 1.0 mm of material off both sides of the rubber as shown in Figure 2.

3. Center the engine mount rubber as follows:

a. Remove the air cleaner.

b. Remove the ground connector on engine mount # 4.

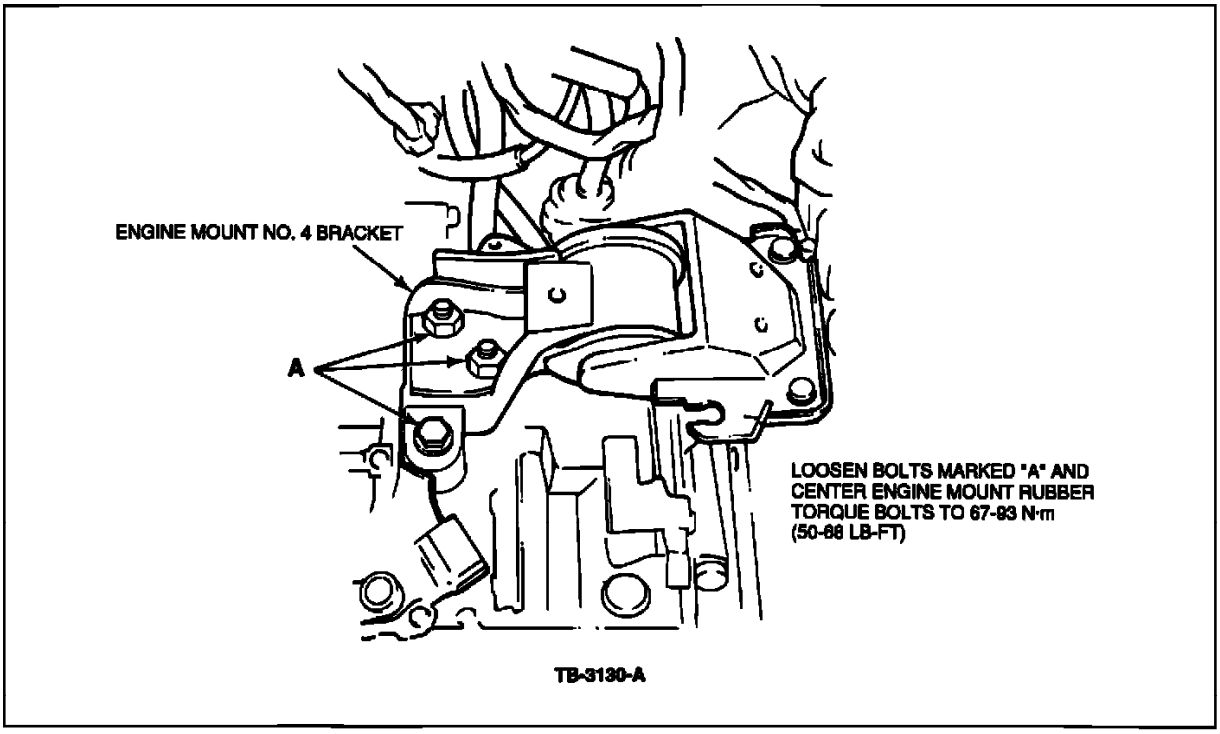

Figure 3

c. Loosen the three bolts marked "A" in Figure 3.

d. Use a pry bar to hold the bracket in place and to center the rubber between the bracket.

e. Retighten the three (3) bolts that were loosened in step "c" above to 50-68 lb.ft. (67-93 N-m).

f. Reconnect the ground connector.

g. Install the air cleaner.

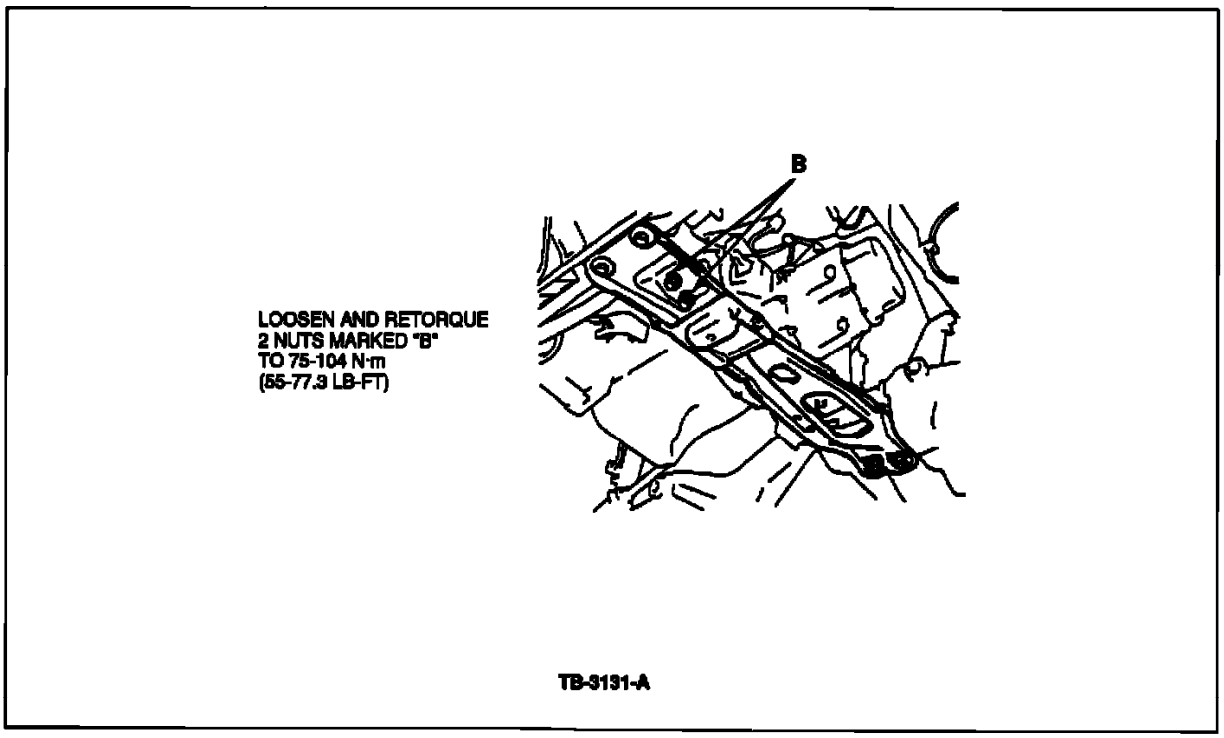

Figure 4

4. Loosen the two (2) nuts holding engine mount # 2 to the engine mount member, Figure 4.

a. Engine mount # 2 will move and align itself.

b. Retighten the two (2) nuts to 55-77 lb.ft. (75-104 N-m), Figure 4.

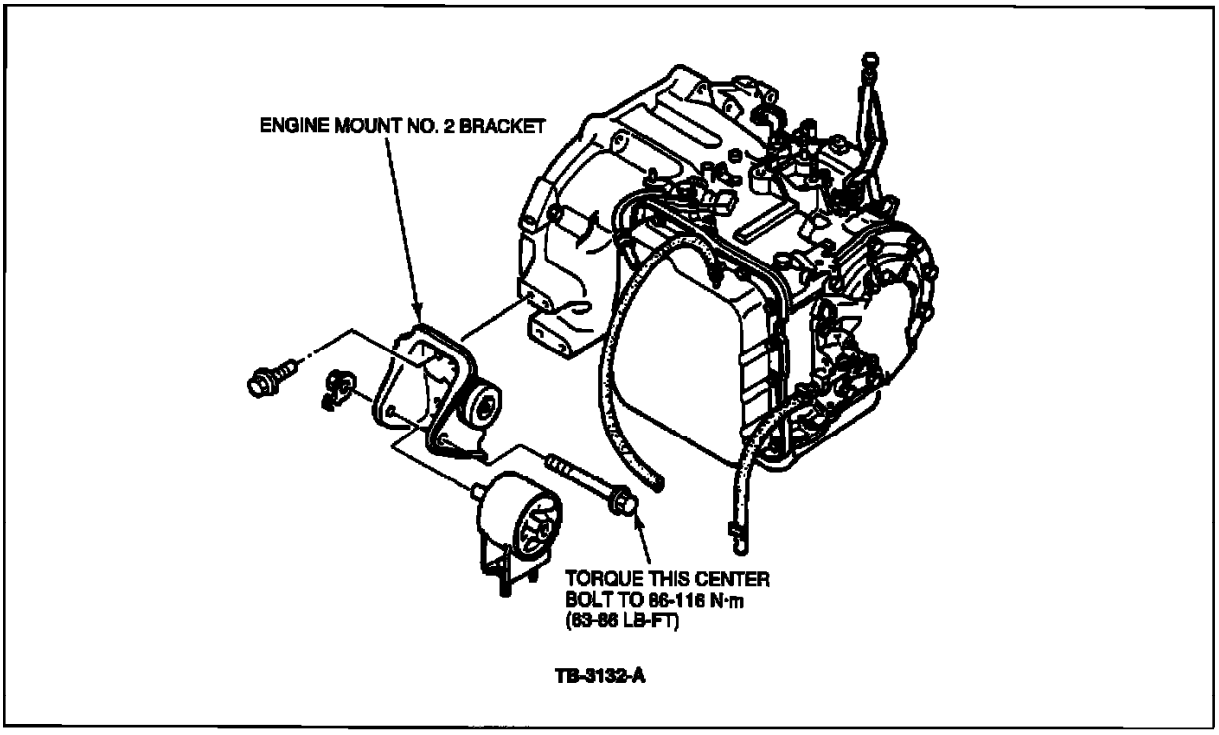

Figure 5

5. Tighten engine mount # 2 center bolt to 63-86 lb.ft. (86-116 N-m), Figure 5.

6. Run the engine until warm and check for vibration.

   a. Check for interference from any components in the engine area that can be a path of vibration from the engine to the body.

   b. Ensure that the radiator is centered and the lower radiator mount is fully seated.

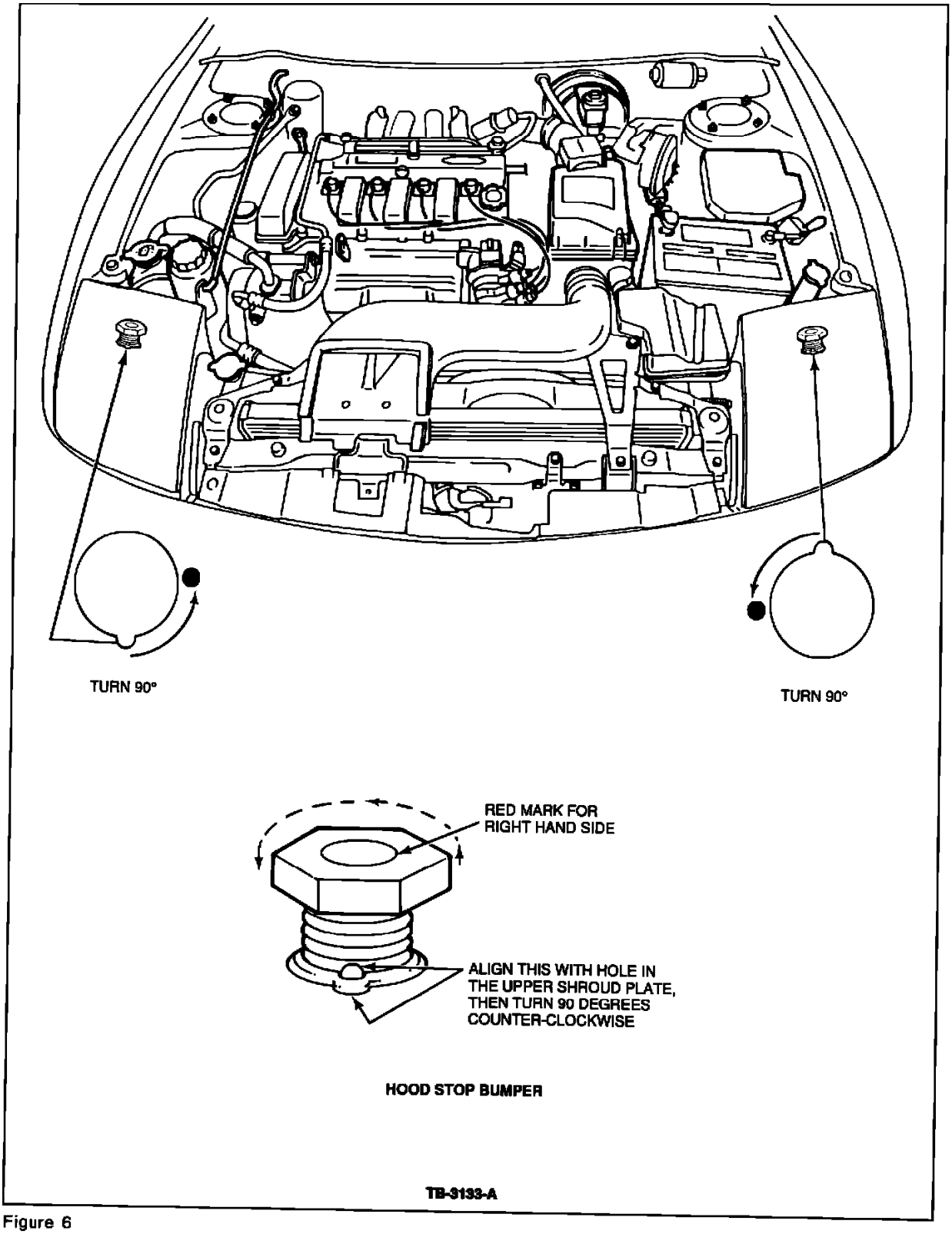

Figure 6

7. Check to be sure that the adjustable hood-stop bumpers are in proper position as shown in Figure 6.

   a. If not in proper position, align the small bump in the hole on the upper shroud plate, Figure 6.

   b. Turn the hood-stop bumpers 90~ counterclockwise to the proper position as shown in Figure 6.

NOTE:
HARDNESS OF THE LEFT AND RIGHT HOOD-STOP BUMPERS IS INTENTIONALLY DIFFERENT. THERE IS A RED MARK IN THE CENTER OF THE RIGHT HAND SIDE HOOD-STOP BUMPER FOR IDENTIFICATION. PART NUMBERS ARE ALSO DIFFERENT.

OTHER APPLICABLE ARTICLES: NONE
SUPERSEDES: 93-12-10
WARRANTY STATUS:
Eligible Under Bumper To Bumper Warranty Coverage

OPERATION	DESCRIPTION	TIME

1993 Ford Probe L4-121 2.0L DOHC VIN A MFI

931808A	Inspect Only	0.2 Hr.
931808B	Inspect And Repair	0.8 Hr.

DEALER CODING

BASIC PART NO.	CONDITION CODE
6038	41

OASIS CODES:
497000, 597997, 702000, 702100, 703000, 703100

Technical Service Bulletin # **94168** Date: **940810**

Power Door Locks/Windows - Inoperative

Article No.
94-16-8

08/10/94

^ LOCKS - POWER - INOPERATIVE DUE TO CORROSION AT WIRING HARNESS CONNECTOR

^ WINDOWS - POWER LOCKS - INOPERATIVE DUE TO CORROSION AT WIRING HARNESS CONNECTOR - VEHICLES BUILT 4/16/92 THROUGH 4/25/94

FORD:
1993-94 PROBE

ISSUE:
Some vehicles may exhibit a loss of some or all power accessories to either front door. This can occur on some vehicles if the door electrical wiring harnesses are corroded at the connector located in the "A" pillar after extensive accumulation of mileage. Electrical systems such as power windows, power door locks and power mirrors may malfunction. This occurs because water enters the connector.

ACTION:
Check the electrical system fuses and check for a corroded connector at the "A" pillar. If the connector is corroded, replace the connector with a new pigtail connector.

INSPECTION PROCEDURE

1. Check for any blown fuses.

2. Disconnect the negative battery cable.

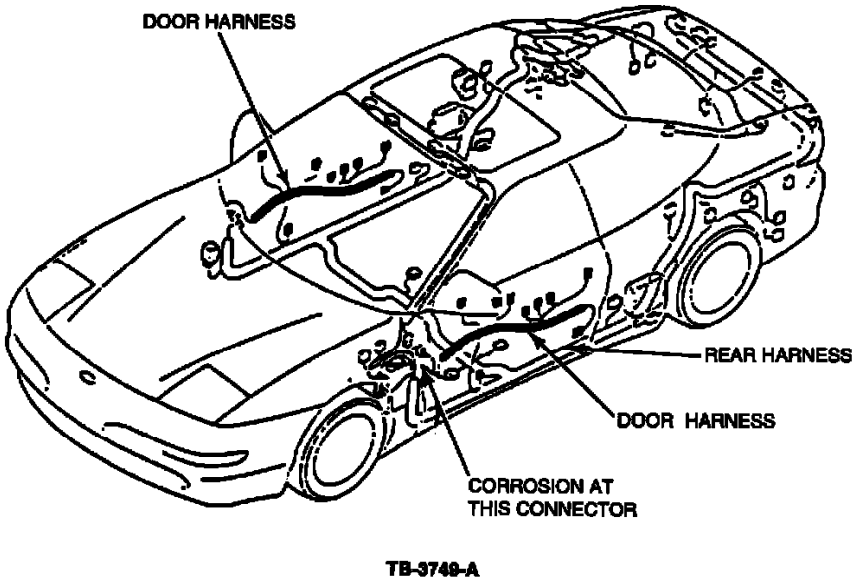

Figure 1

3. Inspect the condition of the "A" pillar electrical connector. Refer to Figure 1.

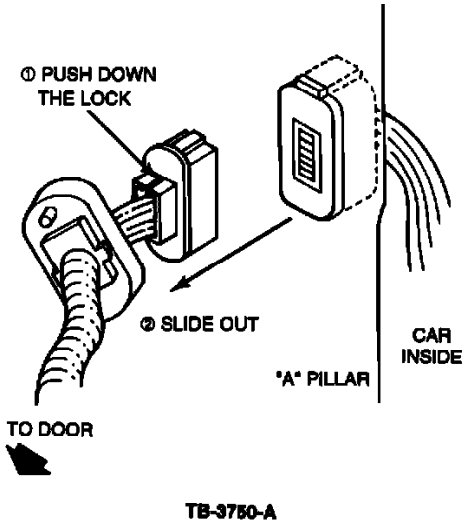

Figure 2

NOTE:

TO DISCONNECT THE SHELLS, PUSH DOWN THE LOCK LOCATED AT THE TOP OF THE CONNECTOR SHELL AND SLIDE OUT THE DOOR HARNESS SIDE SHELL. REFER TO FIGURE 2.

4. If you find corrosion at the connector terminals, repair the connector by using the following repair parts.

REPAIR PROCEDURE

1. Inspect the connector and wire terminal condition of the DOOR side harness. Replace the door harness assembly with a new harness if necessary.

2. Inspect the connector and wire terminal condition of the BODY SIDE harness connector.

REPAIR KIT APPLICATION CHART	
Application	Part Numbers
Pigtail Connector - Driver Side	F42Z-14631-E
Pigtail Connector - Passenger Side	F42Z-14630-E

3. Repair the harness by using the appropriate pigtail from the Repair Kit Application Chart. If only one or two wire terminals are corroded and the connector shell does not have any damage, pull out the damaged wire terminals from the pigtail and replace the defective wires with new ones.

DRIVER'S SIDE

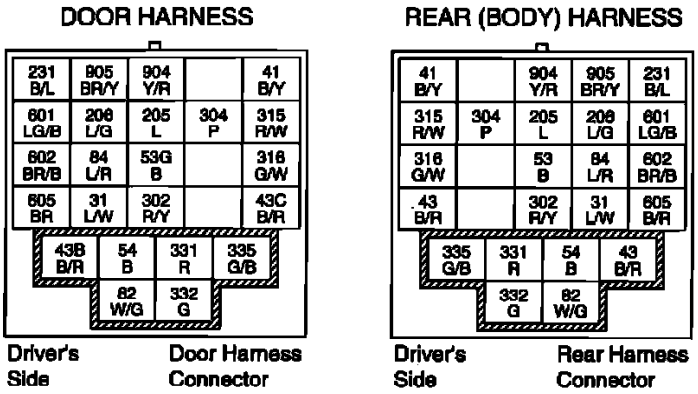

System	Applicable circuit				
Power mirror	31	601	602	605	
Power window	41	43	54	315	316
Power door lock	82	331	332	335	
Speaker	205	206			
Anti-theft	904	905			
Heated mirror	53	231			
Illumination	84	302	304		

PASSENGER SIDE

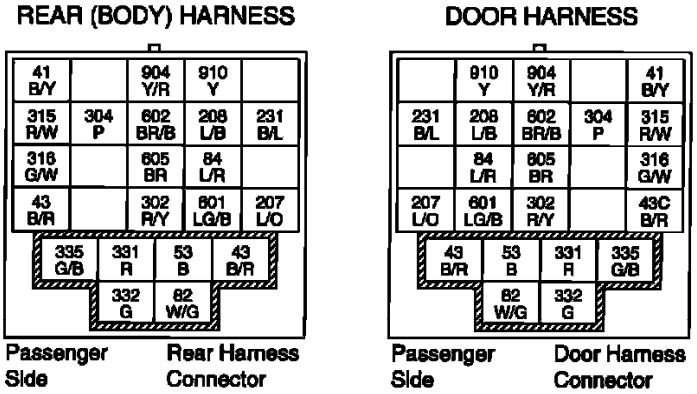

System	Applicable circuit			
Power mirror	601	602	605	
Power window	41	43	315	316
Power door lock	82	331	332	335
Speaker	207	208		
Anti-theft	904	910		
Heated mirror	53	231		
Illumination	84	302	304	

TB-3751-A

Figure 3

4. Refer to Figure 3 for proper wire arrangement.

NOTE:

USE BUTT-CONNECTORS TO CONNECT WIRES AND BUNDLE THE WIRES BY USING PLASTIC TAPE.

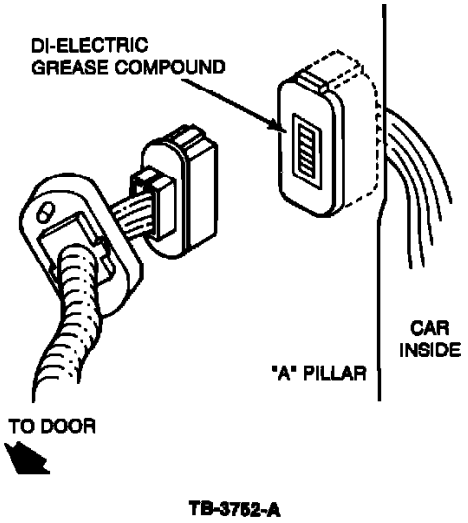

Figure 4

5. Apply some Di-Electric Grease Compound (D7AZ-19A331-A) inside the connector. Refer to Figure 4.

6. Install the connector.

NOTE:
BEFORE INSTALLING THE CONNECTOR, MAKE CERTAIN THAT THE RUBBER BOOT IS PROPERLY PLACED OVER THE DOOR HARNESS SIDE CONNECTOR SHELL.

7. Reinstall the negative battery cable and verify operation of all door accessories.

PART NUMBER	PART NAME	CLASS
F42Z-14631-E	LH Door Wire Harness Repair Kit	CG
F42Z-14630-E	RH Door Wire Harness Repair Kit	CG
D7AZ-19A331-A	Silicone Di-Electric Grease	A
Obtain Locally	Butt-Splice Connectors	-

Parts Block

OTHER APPLICABLE ARTICLES: NONE
WARRANTY STATUS:
Eligible Under The Provisions Of Bumper To Bumper Warranty Coverage

OPERATION	DESCRIPTION	TIME
941608AT	Inspect And Replace Door Side Harness Only (Both Sides)	1.2 Hrs.
941608A	Inspect And Replace Door Side Harness Only (One Side)	0.7 Hr.
941608B	Inspect And Repair Body Side Harness Only (Left)	0.6 Hr.
941608C	Inspect And Repair Body Side Harness Only (Right With A/C)	2.5 Hrs.
941608D	Inspect And Repair Body Side Harness Only (Right Without A/C)	2.1 Hrs.
941608E	Inspect And Replace Body Side Harness Connector (Left)	0.6 Hr.
941608F	Inspect And Replace Body Side Harness Connector (Right With A/C)	2.5 Hrs.
941608G	Inspect And Replace Body Side Harness Connector (Right Without A/C)	2.1 Hrs.
941608H	Inspect And Replace Door Side Harness And Replace Body Side Harness Connector (Left)	1.0 Hr.
941608I	Inspect And Replace Door	2.9 Hrs.

	Side Harness And Replace Body Side Harness Connector (Right With A/C)	
941608J	Inspect And Replace Door Side Harness And Replace Body Side Harness Connector (Right Without A/C)	2.5 Hrs.
941608K	Inspect And Replace Door Side Harness And Repair Body Side Harness (Left)	0.9 Hr.
941608L	Inspect And Replace Door Side Harness And Repair Body Side Harness (Right With A/C)	2.8 Hrs.
941608M	Inspect And Replace Door Side Harness And Repair Body Side Harness (Right Without A/C)	2.5 Hrs.

DEALER CODING

BASIC PART NO.	CONDITION CODE
14630	84

OASIS CODES:
102000, 103000, 112000, 203000, 203200, 205000

Technical Service Bulletin # **9486** Date: **940420**

Door Locks - Inoperative In Below Freezing Temperatures

Article No.: 94-8-6

LOCKS - DOOR - INOPERATIVE AT AMBIENT TEMPERATURES BELOW FREEZING - VEHICLES BUILT BEFORE 3/1/94

FORD:
1993-94 PROBE

ISSUE:
The door locks may freeze up at ambient temperatures below 320 F (0 degree C) and can not be unlocked. This occurs because water penetrates the door lock cylinder and freezes.

ACTION:
Apply some lock lubricant to both front door lock cylinders. Refer to the following procedure for service details.

1. Remove the door lock key cylinder from the door. Refer to the 1993/94 Probe Service Manual, Sections 01-05 and 01-14A, for removal procedure.

2. Using compressed air, carefully blow off any water trapped in the key cylinder.

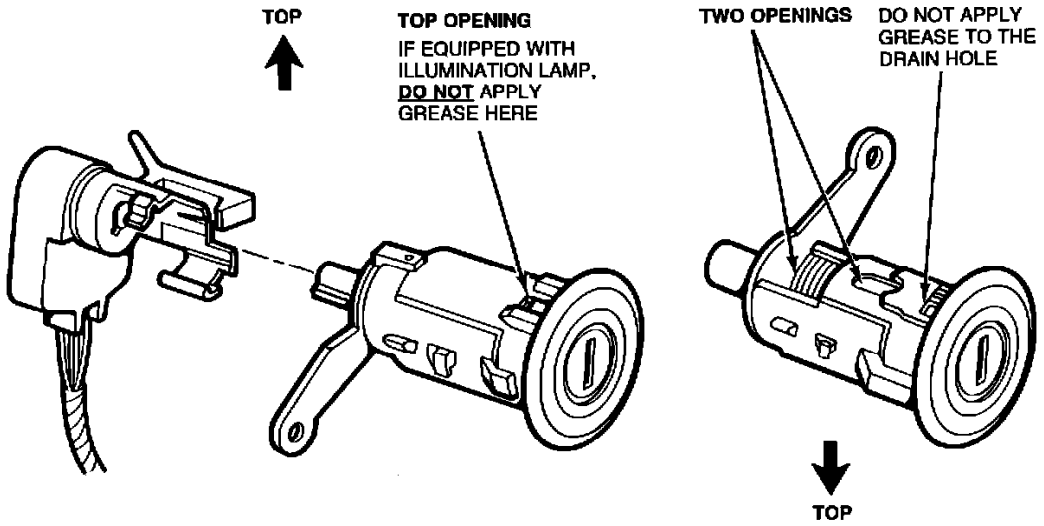

Figure 1

TB-3649-A

3. Apply lock lubricant (D8AZ-19587-AA) into the two openings shown in Figure 1.

NOTE:
ABOUT 0.6CC OF LOCK LUBRICANT PER CYLINDER SHOULD BE SUFFICIENT.

4. Reinstall the key cylinder in the door. Refer to the 1993/94 Probe Service Manual, Sections 01-05 and 01-14A, for installation procedure.

5. Confirm door lock cylinder operation.

6. Clean the grease off the key. Push the key in and out of the key cylinder several times to ensure that no excess grease is left.

PART NUMBER	PART NAME	CLASS
DBAZ-19587-AA	Lock Lubricant	B

OTHER APPLICABLE ARTICLES: NONE

WARRANTY STATUS:
Eligible Under 12 Months/12,000 Miles

OPERATION	DESCRIPTION	TIME
940806AT	Grease Both Door Lock Cylinder	0.6 Hr.
940806A	Grease One Door Lock Cylinder	0.4 Hr.

DEALER CODING

BASIC PART NO.	CONDITION CODE
7021984	41

OASIS CODES: 112000

Technical Service Bulletin # **9384** Date: **930414**

Exterior Clearcoat - Cracking/Eroding/Peeling Off

Article No.
93-8-4

April 14, 1993

PAINT - EXTERIOR CLEARCOAT "MICROCHECKING", HAZING OR PEELING

FORD:
1983-93 THUNDERBIRD
1984-93 TEMPO
1985-93 ESCORT
1986 LTD
1986-93 TAURUS
1989-93 CROWN VICTORIA, MUSTANG, PROBE

1993 Ford Probe L4-121 2.0L DOHC VIN A MFI

LINCOLN-MERCURY:
1983-93 COUGAR
1984-92 MARK VII
1984-93 TOPAZ
1985-89 TRACER
1986 MARQUIS
1986-93 SABLE
1988-93 CONTINENTAL, TOWN CAR
1989-93 GRAND MARQUIS
1991-93 TRACER
1993 MARK VIII

LIGHT TRUCK:
1983-93 RANGER
1986-93 AEROSTAR
1987-90 BRONCO II
1988-93 F SUPER DUTY, F-47
1991-93 ECONOLINE, EXPLORER
1992-93 F-150-350 SERIES
1993 VILLAGER

ISSUE:
The clearcoat layer of the basecoat/clearcoat paint system may "microcheck" (crack and erode), turn white, flake or peel off the vehicle. This condition is noticeable on the horizontal surfaces only.

ACTION:
Inspect the vehicle and if repair is necessary, refer to the following procedure for service details. This is a wet on wet procedure. Sanding is not required after the seal coat is applied.

NOTE:
READ THE ENTIRE SERVICE REPAIR PROCEDURE BEFORE STARTING REPAIRS.

REPAIR PROCEDURE

WARNING:
ALWAYS WEAR A NIOSH/OSHA RECOMMENDED VAPOR/PARTICULATE RESPIRATOR AND USE OTHER RECOMMENDED SAFETY EQUIPMENT.

1. Wash the vehicle with soap and water.

2. Verify clearcoat to basecoat or primer adhesion by applying a 2" wide masking tape strip on all horizontal body panels.

   a. Pull the tape up quickly

   b. Inspect the adhesive side for paint removal.

NOTE:
IF PAINT WAS REMOVED DURING TAPE TEST, THE ENTIRE CLEARCOAT AND BASECOAT SHOULD BE REMOVED FROM THE PANEL.

3. Wipe down the areas to be repainted with wax and grease remover.

   ^ BASF product # 900 PreKleano or equivalent

4. Sand the affected surface with 150/240 grit sand paper. Remove only clearcoat and colorcoat, featheredge areas with 320 grit paper.

NOTE:
DO NOT REMOVE SPRAY PRIMER OR E-COAT.

5. Blow off the area to remove loose dust or debris.

6. Wipe the sanded surface with wax or grease remover.

   ^ BASF product # 901 Prekleano or equivalent

7. Tack off area.

8. Mix and apply one coat of epoxy primer for adhesion and let dry per manufacturer's label instruction (20 - 30 minutes).

^ BASF product # DE 15, PA16, PR80 or equivalent

NOTE:
DO NOT SAND THE NEWLY PRIMED AREAS.

9. Mix and apply two coats of the appropriate colored primer surface sealer.

^ BASF product # DP 21, Solo Color 1:1, then 2 parts of mixture 1 part DH 60, 30% PR80 or equivalent.

10. Mix and apply 2 coats or until hiding of basecoat per manufacturer's label instructions. Apply first coat to repair area only. Apply second coat over entire area. Allow a minimum of 15 minutes flash time before applying the clearcoat.

^ BASF # Diamont Basecoat Color and Diamont Reducer 1:1 or equivalent.

11. Mix and apply 2 coats of urethane clearcoat per manufacturer's label instructions.

^ BASF product # DC90 Diamond Clear, LH50 Diamond Hardener 2:1 or equivalent.

12. Polish if necessary.

13. Clean and detail the vehicle and return it to the customer.

WARRANTY STATUS: INFORMATION ONLY

OASIS CODES: 106000

Technical Service Bulletin # **02-17-6** Date: **020902**

A/T - Inadvertent Shift Interlock Disabling

Article No.
02-17-6

09/02/02

LAMP - BRAKE - INADVERTENT DISABLING OF
BRAKE SHIFT INTERLOCK

FORD:
1992-1993 FESTIVA
1992-1994 TEMPO
1992-1997 THUNDERBIRD
1992-2003 CROWN VICTORIA, ESCORT, MUSTANG, TAURUS
1993-1997 PROBE
1994-1997 ASPIRE
1995-2000 CONTOUR
2002-2003 THUNDERBIRD
1992-1997 AEROSTAR
1992-2003 E SERIES
1993-1997 F SUPER DUTY
1994-1996 BRONCO
1994-1997 F-250, F-350
1994-2003 F-150
1995-2003 EXPLORER, RANGER, WINDSTAR
1997-2003 EXPEDITION
1998-1999 F-250 LD
1999-2003 SUPER DUTY F SERIES
2000-2003 EXCURSION, EXPLORER SPORT
2001-2003 ESCAPE, EXPLORER SPORT TRAC

LINCOLN:
1992-2003 CONTINENTAL, TOWN CAR
1993-1998 MARK VIII
2000-2003 LS
1998-2003 NAVIGATOR

MERCURY:
1992-1994 TOPAZ
1992-1997 COUGAR

1993 Ford Probe L4-121 2.0L DOHC VIN A MFI

1992-1999 TRACER
1992-2003 SABLE
1993-2003 GRAND MARQUIS
1994 CAPRI
1995-2000 MYSTIQUE
1999-2003 COUGAR
1993-2002 VILLAGER
1997-2003 MOUNTAINEER

Article 01-18-1 is being republished in its entirety to update the model year coverage and vehicle line applications.

ISSUE

Corporate, municipal, or police fleets may have had their Ford Motor Company vehicle modified to flash the brake lamps whenever the "police lights" or other aftermarket lights are turned on. These added "police lights" have the potential to disable the brake shift interlock system. The brake shift interlock feature prevents the vehicle from being shifted from park unless the brake pedal is depressed. Disabling of the brake shift interlock feature may enable the operator to inadvertently apply the accelerator instead of the brake pedal when shifting from Park to Drive or Reverse gears.

ACTION

As appropriate, dealers should advise owners (including corporate, municipal, and police agencies) that any vehicle that has been modified with a connection to the brake circuit, or that electrically interfaces with the brake lamps in that manner, should be disconnected IMMEDIATELY and the emergency lighting system should be modified in a manner that does not interfere with normal service operation or the brake shift interlock. In addition, if the high-mount stoplamp flashes when the "police lights" are on, the modification does not conform with the Federal Motor Vehicle Safety Standards (FMVSS) 108 which requires that the high-mount stoplamp only illuminate when applying the brakes.

Installation of warning lights should only be performed with a completely separate electrical system, without connection to any existing vehicle wiring. Connection of aftermarket electrical equipment into the brake lamp circuit or any other circuit which is connected to the Powertrain Control Module (PCM), anti-lock brake computer, air bag system, or any other vehicle system, will cause vehicle malfunction.

OTHER APPLICABLE ARTICLES: NONE
SUPERSEDES: 01-18-1
WARRANTY STATUS: INFORMATION ONLY
OASIS CODES: 203000, 203200, 205000, 301000, 503300

Technical Service Bulletin # **9594** Date: **950508**

Combination Switch - Slow to Cancel After Left Turns

Article No
95-9-4

05/08/95

SWITCH - COMBINATION SWITCH IS SLOW TO RETURN WHEN MAKING LEFT - HAND TURNS - VEHICLES BUILT 4/16/92 THROUGH 10/16/94

FORD:
1993-95 PROBE

ISSUE:
The turn signal lever/combination switch may be slow to return to center on some vehicles when making left-hand turns. This may be due to the upper side of the rubber boot on the turn signal lever sticking in the steering column.

ACTION:
Trim 15 mm (1/2") off the top of the rubber boot. This should reduce the possibility of the rubber boot sticking in the steering column cover. Refer to the following Service Procedure for details.

SERVICE PROCEDURE

1. Lower the turn signal lever

2. Pull out the upper side of the rubber boot from the steering column cover.

NOTE:
WHEN PULLING OUT THE RUBBER BOOT, DO NOT ROTATE THE BOOT.

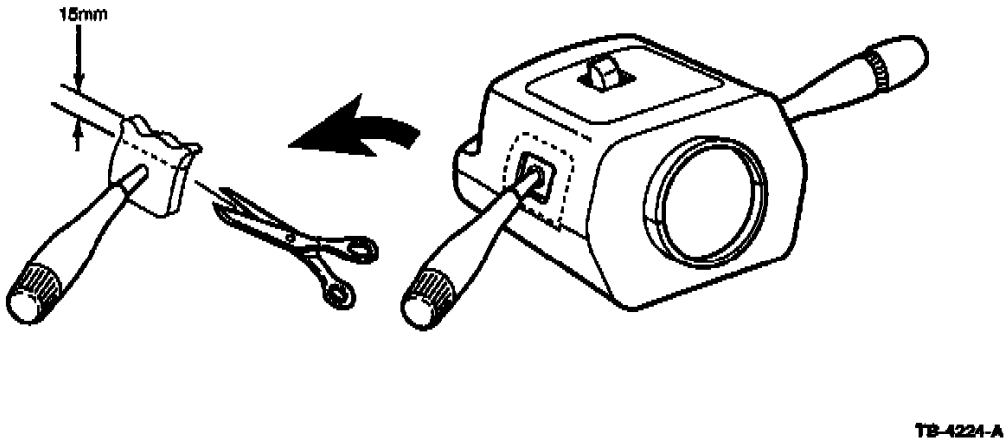

Figure 1

3. Cut 15 mm (1/2") off the top of the rubber boot. Refer to Figure 1.

4. Reinstall the rubber boot into the steering column cover.

5. Verify proper operation of the turn signal lever/combination switch.

OTHER APPLICABLE ARTICLES: NONE

WARRANTY STATUS: Eligible Under The Provisions Of Bumper To Bumper Warranty Coverage

OPERATION	DESCRIPTION	TIME
950904A	Trim Top Of Rubber Boot	0.2 Hr.

DEALER CODING

BASIC PART NO.	CONDITION CODE
13K359	41

OASIS CODES: 107000, 203000, 205000, 303000

Technical Service Bulletin # **95241** Date: **951204**

Steering Wheel - Off Center After Hard Turn

Article No.
95-24-1

12/04/95

STEERING - ALIGNMENT - STEERING WHEEL OFF CENTER - CLEAR VISION - VEHICLES BUILT THROUGH 3/1/95

FORD:
1993-95 PROBE

ISSUE:
The steering wheel may be at a slightly off center position after a hard left or right turn on some vehicles. This may be caused by the hardness of the steering gear left mounting bushing which allows the steering gear to move sideways slightly.

ACTION:
Confirm that the vehicle does not drift or pull. Check for loose or damaged steering components. Install a revised steering gear left mounting bushing. Refer to the following Service Procedure for details.

CONFIRMATION PROCEDURE

1. Set the front wheels to the straight ahead position. Place a mark on the steering wheel at Point A using tape (Figure 1).

2. With the vehicle stationary, engine running, rotate the steering wheel to its full RH lock position.

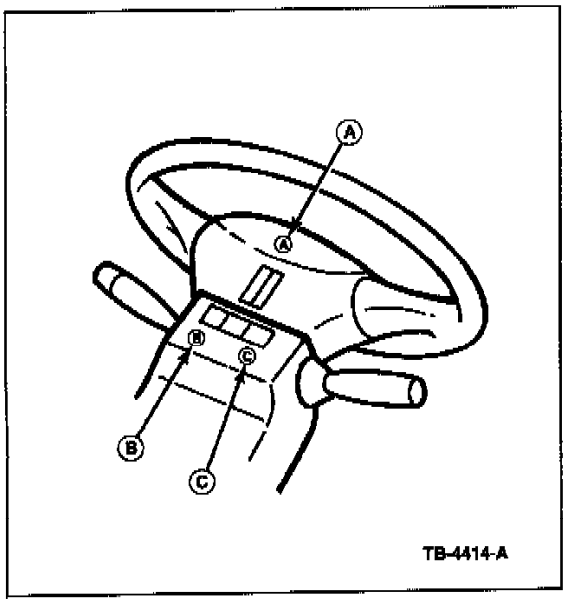

Figure 1

3. Drive the vehicle on a straight road for approximately 0.40 km (1/4 mile). Check and mark the steering column at Point B using tape (Figure 1).

4. With the vehicle stationary, engine running, rotate the steering wheel to its full LH lock position.

5. Drive the vehicle on a straight road for approximately 0.40 km (1/4 mile). Check and mark the steering column at Point C using tape (Figure 1).

6. If the distance between Point B and Point C is greater than 10 mm (0.4"), replace the LH rack bushing following the Service Procedure listed in this TSB article.

7. If the distance between Point B and Point C is less than 10 mm (0.4") and the vehicle does not drift or pull, the vehicle is operating normal to design intent and no action is necessary.

SERVICE PROCEDURE

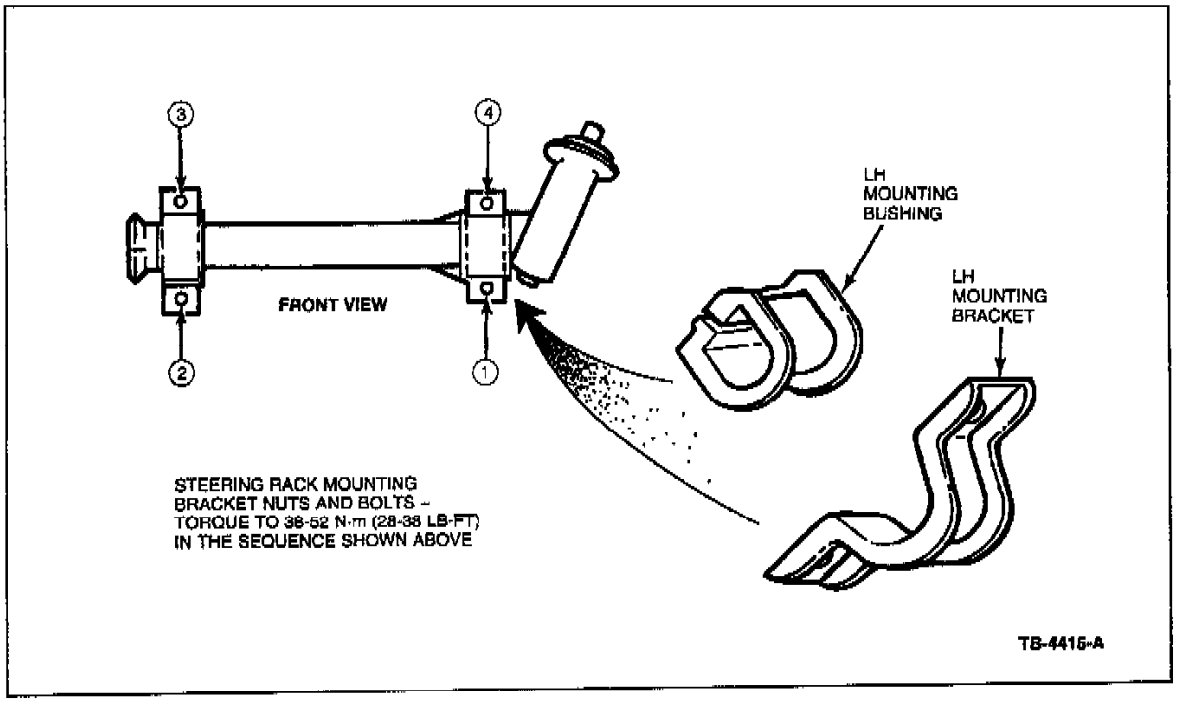

Figure 2

1. Remove the four (4) steering rack mounting bracket nuts and bolts (Figure 2).

2. Pry the LH mounting bracket loose.

3. Remove the LH mounting bushing and discard.

4. Install the new LH mounting bushing (F32Z-3C716-AA).

5. Reinstall the LH mounting bracket.

6. Reinstall the four (4) steering rack mounting nuts and bolts.

7. Torque the nuts to 38-52 N-m (28-38 lb-ft) in the sequence shown in Figure 2.

8. Verify the repair.

PART NUMBER	PART NAME
F32Z-3C716-AA	LH Mounting Bushing

OTHER APPLICABLE ARTICLES: NONE
WARRANTY STATUS: Eligible Under The Provisions Of Bumper To Bumper Warranty Coverage

OPERATION	DESCRIPTION	TIME
952401A	Replace LH Mounting Bushing	0.8 Hr

DEALER CODING

BASIC PART NO.	CONDITION CODE
3C716	36

OASIS CODES: 303000

Technical Service Bulletin # **94172** Date: **940824**

Rear View Mirror - Detaches From Windshield

Article No.
94-17-2

08/24/94

REAR VIEW MIRROR - DETACHES FROM WINDSHIELD - SERVICE TIP

FORD:
1990-94 TEMPO
1990-95 CROWN VICTORIA, ESCORT, MUSTANG, TAURUS, THUNDERBIRD
1992-95 PROBE 1995 CONTOUR

LINCOLN-MERCURY:
1990-92 MARK VII
1990-94 TOPAZ
1990-95 CONTINENTAL, COUGAR, GRAND MARQUIS, SABLE, TOWN CAR
1991-95 TRACER
1993-95 MARK VIII
1995 MYSTIQUE

LIGHT TRUCK:
1990-95 AEROSTAR, BRONCO, ECONOLINE, EXPLORER, F-150-350 SERIES, RANGER
1993-95 VILLAGER
1995 WINDSTAR

ISSUE:
The rear view mirror assembly may detach from the windshield. This may be caused by:

^ High humidity conditions, which may cause the production adhesive to fail

^ Improper cleaning of the glass and the mirror button during repair process may cause the Rear View Mirror Adhesive service chemical to fail, resulting in repeat repairs

^ Use of expired or improperly stored service kits

^ Improper use of service kit.

ACTION:
Review the service kit expiration date, and use the revised cleaning and application procedures. Refer to the following procedures for service.

WARNING:
USE WITH ADEQUATE VENTILATION. AVOID EYE CONTACT AND CONTACT WITH SKIN.

SERVICE KIT STORAGE AND EXPIRATION PROCEDURES

1. Avoid prolonged storage of Rear View Mirror Adhesive kits. Over time, the adhesive performance will degrade. Excessive storage temperatures and exposure to sunlight will also degrade the unused material. For these reasons, Ford recommends:

   ^ Rotating stock, using the oldest material first

   ^ Storing the adhesive kits in a cool, dry, dark place

   ^ Avoiding placement of display racks in direct sunlight

   ^ Using only repair kits that are less than one (1) year old.

HOW TO READ FORD REAR VIEW MIRROR ADHESIVE (D9AZ-19554-CA) DATE CODES

EXAMPLE: 3CA262

YEAR OF MANUFACTURE: FIRST CHARACTER (3) IS LAST DIGIT OF YEAR, I.E., 1993

MONTH OF MANUFACTURE: SECOND CHARACTER (C) CODES MONTH OF YEAR (MARCH). SEE CHART BELOW FOR INTERPRETATION.

LAST FOUR CHARACTERS (A262) SIGNIFY BATCH NUMBER AND PACKAGING LOCATION.

THE ADHESIVE WAS MANUFACTURED IN MARCH, 1993.

MONTHLY CODE GUIDE

A - JANUARY	E - MAY	I - SEPTEMBER
B - FEBRUARY	F - JUNE	J - OCTOBER
C - MARCH	G - JULY	K - NOVEMBER
D - APRIL	H - AUGUST	L - DECEMBER

TB-3944-A

Figure 1

2. You can determine the age of the material in the kit by checking the date code crimped in the plastic seal at the bottom of the adhesive squeeze tube. The date code format is shown in Figure 1.

   ^ The first character is a digit representing the last digit of the year the material was manufactured.

   ^ The second character is a letter representing the month of manufacture.

   ^ The remaining characters indicate the location where the material was produced.

LOCATION OF "USE BY" DATES

REAR VIEW MIRROR ADHESIVE

A HIGH STRENGTH ADHESIVE FOR MIRROR BRACKET BONDING

DIRECTIONS FOR APPLICATION

1. Make sure glass.bracket and adhesive kit are at least at room temperature (65–75°F, 18.3–23.9°C).
2. Mark original location of bracket on outside of windshield using a wax pencil.
3. Thoroughly clean bonding surfaces of glass and bracket to remove old adhesive. Use mild abrasive cleanser on glass and fine sandpaper on bracket to lightly roughen surface. Wipe clean with alcohol moistened cloth.
4. Crush accelerator vial and apply accelerator to bonding surface of bracket and windshield. Let dry for 3 minutes.
5. Apply a small amount of adhesive to bracket. Spread adhesive evenly over entire bonding surface.
6. Position the bracket in its proper location on the windshield and press firmly for 1 minute.
7. Allow 5 minutes for adhesive to cure and install rear view mirror to bracket.

WARNING

VAPOR HARMFUL. EYE IRRITANT AND MAY IRRITATE SKIN.

Adhesive contains Acrylic Acid and Methacrylic Ester. Accelerator contains Trichloroethylene. Use with adequate ventilation. Avoid breathing vapor. Avoid eye contact and contact with skin. In case of eye contact, flush eyes with water for 15 minutes and get medical attention. In case of skin contact, wash with soap and water. Do not expose to heat or store above 120°F (49°C).

KEEP BOTH PRODUCTS OUT OF REACH OF CHILDREN

D9AZ-19554-CA

DISTRIBUTED BY:
FORD MOTOR COMPANY, DEARBORN, MICHIGAN 48121
PRINTED IN USA. SS/658 L1509A REV. 5-86
CPR © FORD MOTOR COMPANY, 1986

BLISTER CARD

USE BY
3/15/94

0 84422 09796 1

TC-486

ONE PACKAGE OF 10 PCS

D9AZ-19554-CA

REARVIEW MIRROR ADHESIVE

SHIPPING BOX

USE BY 031594

DO NOT HEAT OR STORE AT TEMPERATURE ABOVE 120°F (49°C)

TB-3645-A

Figure 2

This date represents the date the material was manufactured. Ford recommends that material older than one year old not be used to install interior rear view mirror assemblies. To enable dealership personnel to more easily determine the suitability of the material, the individual kits and the shipping box will be stamped with a "Use By" date. The new "Use By" label will be on all products made after June, 1994. Figure 2 shows the location of the "Use By" date on the back of each individual blister card and the shipping box.

SERVICE PROCEDURES

NOTE:

THE FOLLOWING PROCEDURES SUPERSEDE THE INSTRUCTIONS ON THE BACK OF THE ORIGINAL REAR VIEW MIRROR ADHESIVE PACKAGE.

NOTE:

THE MIRROR BUTTON IS OFTEN CALLED A BRACKET, AND THE WINDSHIELD IS SOMETIMES REFERRED TO AS GLASS.

1. Make sure glass, bracket, and rear view mirror adhesive are at room temperature (65-75~F, 18-24~C).

^ If possible, the repair should be performed indoors. Do not perform the repair in direct sunlight.

^ If you must work outside, park the vehicle in a shaded area out of the direct sunlight.

^ The adhesive will not bond at temperatures less than 45~F (7~C), and will bond too quickly in direct sunlight.

2. Mark original location of bracket on outside of windshield with any appropriate marking tool (e.g., crayon, magic marker) before you begin.

NOTE:
SURFACES MUST BE CLEAN FOR PROPER BONDING TO OCCUR.

3. Use the following steps to ensure proper cleaning of glass and button:

   a. Carefully remove thick layers of the old adhesive from the glass and the mirror button using a single edge razor blade.

   b. Using a clean cloth saturated with isopropyl alcohol (obtain 70% isopropyl rubbing alcohol locally), rub the glass and the mirror button to remove any remaining old adhesive. Soaking the mirror button in isopropyl alcohol may speed the adhesive removal process.

   c. Rub the mirror button and the glass with a non-abrasive bathroom cleanser (obtain locally) to ensure all traces of the old adhesive have been removed.

NOTE:
IT IS ESSENTIAL THAT NO TRACES OF CLEANSER OR ADHESIVE REMAIN ON THE GLASS OR THE MIRROR BUTTON.

   d. Wipe the glass and the mirror button with a new, clean cloth saturated with isopropyl alcohol (or rubbing alcohol).

4. The accelerator vial contains a priming agent which speeds the adhesive curing process.

   a. Grasp the paper wrapper around the vial and squeeze until the vial inside the paper wrapper breaks, releasing the accelerator to the felt tip on the end of the cylinder.

   b. Cover the entire bonding area by applying a barely visible, but uniform, film of accelerator to an area larger than the mirror button "footprint" on the glass and to the entire mirror button bonding surface.

   c. Let the accelerator dry for 3 minutes.

NOTE:
DO NOT TOUCH THE PRIMED SURFACES.

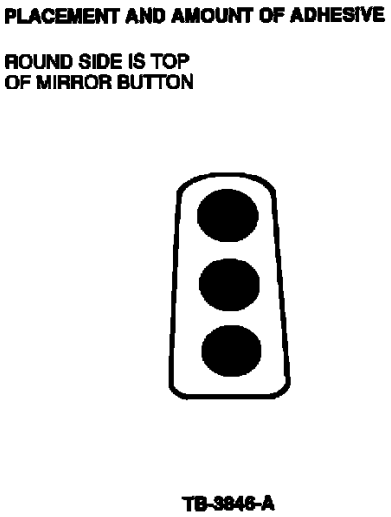

Figure 3

5. Squeeze only three (3) drops of adhesive in a line from top to bottom on the mirror button (Figure 3). It is not necessary to spread the adhesive.

NOTE:
MAKE SURE THE BUTTON IS POSITIONED PROPERLY FOR STEP 6. REPOSITIONING THE BUTTON, ONCE IN CONTACT WITH GLASS, WILL CAUSE THE ADHESIVE TO FAIL.

6. Position the mirror button in its proper location on the windshield (the rounded edge is pointing up). Press firmly for one full minute to ensure complete bonding. If mirror button is not firmly attached after more than one minute, remove button and repeat Steps 2 through 5.

7. Allow 5 minutes for adhesive to cure (with temperatures above 65~F, 18~C) and install rear view mirror to button. If temperature is between 45-65~F (7-18~C), use masking tape to firmly hold the button to the windshield and allow the adhesive to cure for at least 15 minutes.

PART NUMBER	PART NAME	CLASS
D9AZ-19554-CA	Rear View Mirror Adhesive	B

OTHER APPLICABLE ARTICLES: NONE
WARRANTY STATUS:
Eligible Under Basic Warranty Coverage For 1990 Luxury; 1990 And 1991 Non-Luxury, All Others Eligible Under The Provisions Of Bumper To Bumper Warranty Coverage

OPERATION	DESCRIPTION	TIME
941702A	Re-Attach Rear View Mirror	0.5 Hr.

DEALER CODING

BASIC PART NO.	CONDITION CODE
17698	03

OASIS CODES: 102000, 103000, 107000

Technical Service Bulletin # **9594** Date: **950508**

Combination Switch - Slow to Cancel After Left Turns

Article No
95-9-4

05/08/95

SWITCH - COMBINATION SWITCH IS SLOW TO RETURN WHEN MAKING LEFT - HAND TURNS - VEHICLES BUILT 4/16/92 THROUGH 10/16/94

FORD:
1993-95 PROBE

ISSUE:
The turn signal lever/combination switch may be slow to return to center on some vehicles when making left-hand turns. This may be due to the upper side of the rubber boot on the turn signal lever sticking in the steering column.

ACTION:
Trim 15 mm (1/2") off the top of the rubber boot. This should reduce the possibility of the rubber boot sticking in the steering column cover. Refer to the following Service Procedure for details.

SERVICE PROCEDURE

1. Lower the turn signal lever

2. Pull out the upper side of the rubber boot from the steering column cover.

NOTE:
WHEN PULLING OUT THE RUBBER BOOT, DO NOT ROTATE THE BOOT.

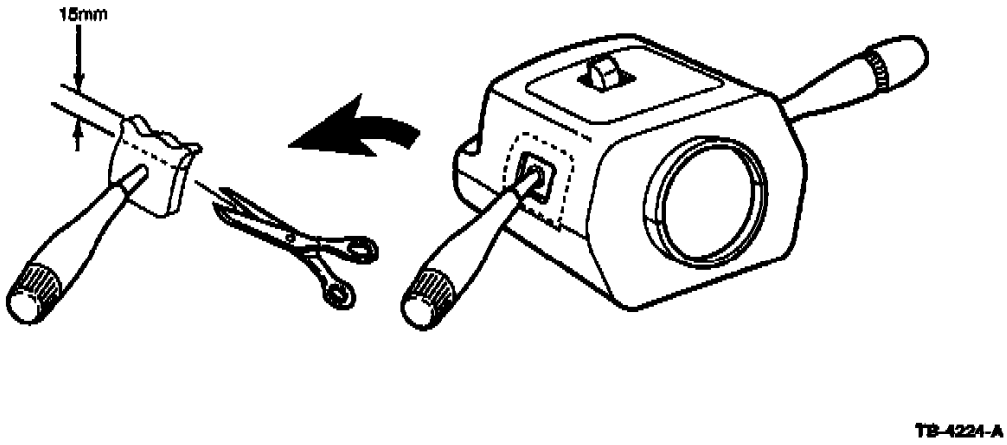

Figure 1

3. Cut 15 mm (1/2") off the top of the rubber boot. Refer to Figure 1.

4. Reinstall the rubber boot into the steering column cover.

5. Verify proper operation of the turn signal lever/combination switch.

OTHER APPLICABLE ARTICLES: NONE

WARRANTY STATUS: Eligible Under The Provisions Of Bumper To Bumper Warranty Coverage

OPERATION	DESCRIPTION	TIME
950904A	Trim Top Of Rubber Boot	0.2 Hr.

DEALER CODING

BASIC PART NO.	CONDITION CODE
13K359	41

OASIS CODES: 107000, 203000, 205000, 303000 Technical Service Bulletin # **94B40** Date: **940401**

Overview of Program 94B40

TO: All Ford Dealers April, 1994

SUBJECT:
Owner Notification Program 94B40 - Certain 1993 Model Year Probe Cars - Owner Guide Correction

OASIS - NO
OWNER LIST - YES

AFFECTED VEHICLES

Certain 1993 Model Year Ford Probe cars built from Job # 1 through July 23, 1992, are affected by this program.

REASONS FOR THIS PROGRAM

The Owner Guide furnished with some 1993 Probe cars does not describe the proper method for reattaching the car's luggage compartment cover after removal. If the cover is not properly retained, it would be free to move and could cause injury to rear seat passengers during a sudden stop or accident.

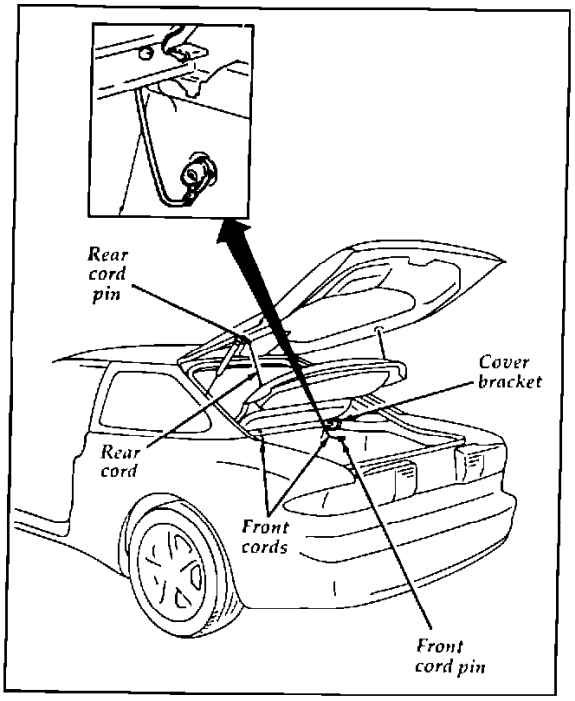

The luggage compartment and cover

Warning: The cover may cause injury in a sudden stop or accident if it is left lying loose in the vehicle or if it is not securely installed. Therefore, the cover should either be securely installed or removed from the vehicle. To be securely installed, the cover must be attached to the brackets and all four cords must be fastened.

127

SERVICE ACTION

To correct this condition, owners of the affected cars will be mailed a correction sticker page and asked to affix it to page 127 of their Owner Guide. Owners may also return to their dealer to have the corrected sticker page affixed.

ATTACHMENTS

Attachment I
- Administrative Information

Attachment II
- Labor Allowances

Attachment I - Administrative Information

OASIS
This program will NOT appear in OASIS.

PLEASE NOTE
CORRECT ALL VEHICLES IN STOCK BEFORE DELIVERY

PROMPTLY CORRECT

- Affected vehicles on the enclosed list.

- Other eligible vehicles which are brought to your dealership.

DEALER-OWNER CONTACT
Immediately contact any owner whose name is not on the list. Give owner a copy of the Owner Letter. Arrange with the owner for a service date.

FCSD CONTACT
Talk with your FCSD Service Zone Manager about program concerns.

FORM 1863
Enter 1863 claims using DWE

See Warranty and Policy Manual:

- Section 5.6 - I/Section 6.1 - 24 (Owner Notification Programs)

Attachment II - Labor and Parts Information

OWNER NOTIFICATION PROGRAM 94B40
1993 PROBE OWNER GUIDE CORRECTION

LABOR ALLOWANCES	HOURS	LABOR OPERATION
Affix Corrected Sticker to Page 127 of Owner Guide.....	0.2 Hrs.	B40B

PARTS REQUIREMENTS

NONE
Owners will be mailed a correction sticker page to be affixed on page 127 of their car's Owner Guide. Owners may also return to their dealer to have the corrected sticker page affixed. Refer to the following for labor allowance and claim processing information.

NOTE:
If additional sticker pages are required, they may be obtained at no charge by calling Renkim Corporation on 1-800-352-5621.

CLAIMS PREPARATIONS

- Use Form 1863
- Enter using DWE
- Use code information shown below:

Program Code	- 94B40
Causal Basic Part Number	- MISC
Condition Code	- 08
Labor Operation	- B40B
Customer Concern Code	- N99

Owner Letter

Serial Number 12345678901234567 May, 1994

Mr. John Sample
123 Main Street
Anywhere, USA 12345

REASON FOR THIS LETTER

The Owner Guide included with your 1993 Probe does not describe the proper method for reattaching the car's luggage compartment cover after removal. If the cover is not properly retained, it would be free to move and could cause injury to rear seat passengers during a sudden stop or accident.

NEW PAGE PROVIDED WITH THIS LETTER

In order to provide the information necessary to properly secure the luggage compartment cover, we have enclosed a new Owner Guide sticker page with this letter. Please affix this new sticker page over the existing page in your car's Owner Guide.

ATTACHING THE PAGE

Peel off the protective backing and affix it on page 127 of your 1993 Probe Owner Guide.

CONTACT YOUR DEALER

If you want a dealer to affix the page, contact him. Be sure that you bring this letter and the new sticker page with you when you visit the dealer. There is no charge to you for this service.

We are taking this action as part of our ongoing efforts to maintain owner confidence in our products. We hope this program will confirm your continued satisfaction in your Ford built car.

Technical Service Bulletin # **932410** Date: **931124**

Instrument Cluster Warning Lights - Dimly Lit

Article No.

1993 Ford Probe L4-121 2.0L DOHC VIN A MFI

93-24-10

11/24/93

^ LAMP - MALFUNCTION OF FOUR PIN LOW OIL LEVEL RELAY - VEHICLES BUILT AFTER 8/1/92 OR 1983-1993 VEHICLES THAT HAVE HAD SERVICE REPLACEMENT IGNITION SWITCHES AFTER 8/1/92

^ LAMPS - INSTRUMENT CLUSTER WARNING LIGHTS DIMLY LIT - VEHICLES BUILT AFTER 8/1/92 OR 1983-1993 VEHICLES THAT HAVE HAD SERVICE REPLACEMENT IGNITION SWITCHES AFTER 8/1/92

FORD:
1983 FAIRMONT
1983-89 CROWN VICTORIA, ESCORT
1983-93 MUSTANG, THUNDERBIRD
1983-94 PROBE
1984-86 LTD
1984-94 TEMPO

LINCOLN-MERCURY:
1983 LN7, ZEPHYR
1983-87 CONTINENTAL, LYNX
1983-89 GRAND MARQUIS, TOWN CAR
1983-93 COUGAR
1984-86 CAPRI, MARQUIS
1984-94 TOPAZ

LIGHT TRUCK:
1983-91 BRONCO
1983-93 ECONOLINE, F-150-350 SERIES, RANGER
1986-91 AEROSTAR
1991-93 EXPLORER

ISSUE:
The instrument cluster warning light(s) may be dimly lit or there may be a malfunction of the four pin low oil relay on vehicles so equipped. This could be due to the ignition switch.

ACTION:

PART NUMBER	PART NAME	CLASS
F29Z-11572-D	Ignition Switch (All Cars, 86-91 Aerostar)	B
F2TZ-11572-B	Ignition Switch (91-93 Explorer, 92-93 Ranger)	B
F2UZ-11572-C	Ignition Switch (92-94 Econoline)	B
F2TZ-11572-E	Ignition Switch (83-93 F-Series, 83-91 Bronco, 83-91 Ranger*)	B
F2TZ-11572-F	Ignition Switch (83-91 Econoline, 83-91 Ranger*)	B

(*) The 1983 to 1991 Ranger can use either switch.

If the vehicle displays the subject symptoms and meets the following conditions, replace the ignition switch. Refer to the appropriate Car or Light Truck Service Manual (Section 13-04 for 1983-1990 Cars, Section 11-04 for 1991-1993 Cars and Section 13-05 for 1983-1990 Light Trucks, Section 11-05 for 1991-1993 Light Trucks) for removal and installation procedures. Refer to the Parts Block in this article for correct parts usage.

CONDITIONS

^ The vehicle has 14401 wiring attached to the P2 terminal of the ignition switch. Refer to the wiring schematic and/or Electrical And Vacuum Troubleshooting Manual (EVTM) for the concern vehicle.

IGNITION SWITCH (ENGINEERING) PART NUMBERS	
PASSENGER CAR	LIGHT TRUCK
F29A-11572-DA (All)	F27A-11572-BB (91-93 Explorer, 92-93 Ranger) F2UA-11572-CA (92-94 Econoline) F29A-11572-DA (86-91 Aerostar) F2TA-11572-EA (83-93 F-Series, 83-91 Bronco, 83-91 Ranger*) F2TA-11572-FA (83-91 Econoline, 83-91 Ranger*)

(*) The 1983 to 1991 Ranger can use either switch.

^ The vehicle is equipped with one of the ignition switches identified in the Ignition Switch Part Number Chart.

NOTE:
THE SERVICE PART NUMBERS FOR THE REPLACEMENT IGNITION SWITCHES WILL HAVE THE SAME PART NUMBERS AS THOSE REPLACED. THE NEW SWITCH HAS BEEN IMPROVED TO CORRECT THE SUBJECT ISSUE.

OTHER APPLICABLE ARTICLES: NONE
WARRANTY STATUS:
Eligible Under The Provisions Of The Bumper To Bumper For 1992/93 Models, Basic Warranty Coverage For All Other Models Except Lincolns. Major Component Warranty Coverage For Lincolns

OPERATION	DESCRIPTION	TIME
932410A	Replace Ignition Switch - All Light and Compact Trucks	0.5 Hr.

DEALER CODING

BASIC PART NO.	CONDITION CODE
11572	X1

OASIS CODES: 201000, 201100, 206000

Technical Service Bulletin # **94125** Date: **940615**

Power Window Switches - Obsolete Part Return

Article No.
94-12-5

06/15/94

^ SWITCHES - POWER WINDOWS - SERVICE PARTS RETURN OF OBSOLETE POWER WINDOW SWITCHES

^ SERVICE PARTS RETURN OF OBSOLETE POWER WINDOW SWITCHES

FORD:
1993-94 PROBE

ISSUE:
An improved design Power Window Switch is available to reduce the occurrence of paint peeling from the switch.

ACTION:
Remove the obsolete parts from your dealership's inventory. Obsolete parts should be returned to your facing PDC within thirty (30) days of this TSB.

There is a yellow date code on each part (e.g. 3KO2), meaning (3) 1993 and (K) November and (02) the day of the month. Any part with a date code of 3KO2 or later is an improved part. Only those parts that have a date prior to 3KO2 should be returned to your facing PDC.

1. Perform 100% sort of all dealership stock on hand. Okay stock has date code of 3KO2 or later.

2. Suspect stock has date code 3K01 or prior. Return all suspect parts F32Z-14529-A and F32Z-14529-B to your facing PDC using the least expensive transportation.

3. If claim is processed electronically using DOES II, use return code "GB"; otherwise, complete a separate paper claim form FPS-340 using return code "J".

4. In the "Remarks" section, write "Returned Per TSB 94-12-5".

LIMITS

^ The returns must be received within 30 days from the date of this TSB.

^ Returns are restricted to the subject part.

^ The parts must have been purchased from FCSD in accordance with Policy And Procedure Bulletin 4000.

CREDIT
Credit for parts and prepaid freight costs will be issued.

Replacement stock is available for reordering.

PART NUMBER	PART NAME	CLASS
F32Z-14529-A	Power Window Switch	B
F32Z-14529-B	Power Window Switch	B

OTHER APPLICABLE ARTICLES: NONE
WARRANTY STATUS: INFORMATION ONLY
OASIS CODES: 205000

Technical Service Bulletin # **00-17-1** Date: **000821**

Ignition - Hard/No Start, Distributor Stator Replacement

Article NO.
00-17-1

08/21/00

^ HARD/NO START - 1993 PROBE WITH AUTOMATIC TRANSMISSION AND 2.0L ENGINE ONLY - NEW STATOR SERVICE PART RELEASED

^ NO SPARK - 1993 PROBE WITH AUTOMATIC TRANSMISSION AND 2.0L ENGINE ONLY - NEW STATOR SERVICE PART RELEASED

FORD:
1993 PROBE

ISSUE
A hard/no start or stall condition may occur on some vehicles after an engine hot soak event. This may be caused by an open in the distributor stator circuit. A new individual stator has been released for service. Previously the distributor was only serviced as an assembly.

ACTION
Replace stator assembly with a revised stator assembly. Refer to the following Service Procedure for details.

SERVICE PROCEDURE

REMOVAL

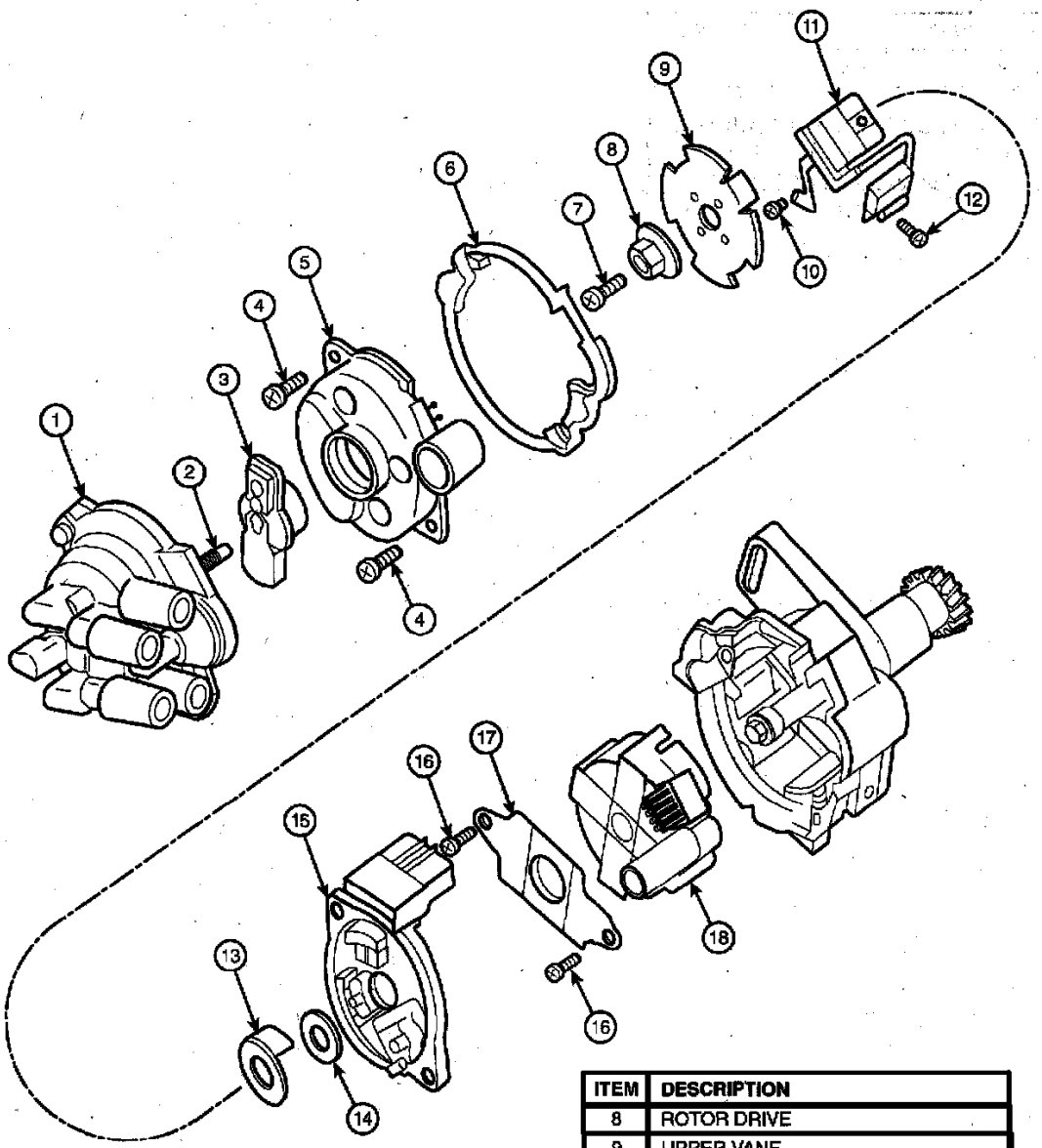

ITEM	DESCRIPTION
1	DISTRIBUTOR CAP ASSEMBLY
2	POINT ASSEMBLY (COIL OUTPUT)
3	ROTOR ASSEMBLY
4	STATOR COVER SCREWS (2)
5	STATOR COVER
6	GASKET
7	ARMATURE CENTER SCREW

ITEM	DESCRIPTION
8	ROTOR DRIVE
9	UPPER VANE
10	IGNITION COIL TERMINAL SCREW
11	IGNITION COIL CONNECTOR
12	IGNITION COIL CONNECTOR SCREW
13	LOWER VANE
14	SPACER
15	STATOR ASSEMBLY
16	RETAINING PLATE SCREWS (2)
17	RETAINING PLATE
18	IGNITION COIL

Figure 1

TB-6112-A

Refer to Figure 1.

1. Remove the engine air cleaner assembly. Refer to the Service Manual, Section 03-12A.

2. Remove the distributor cap, gasket, and rotor.

3. Remove the two (2) stator cover screws and stator cover.

4. Remove the armature shaft center screw and rotor drive.

CAUTION:

MAKE NOTE OF LOCATION OF VANES WHEN REMOVING. THEY WILL NEED TO BE INSTALLED IN THE SAME ORIENTATION.

5. Remove the upper and lower vanes and the spacer from the armature shaft.

6. Remove the condenser screw from the side of the distributor housing and remove the ignition coil terminal screw.

7. Remove and discard the stator assembly.

INSTALLATION

Refer to Figure 1.

1. Install the revised Stator Assembly (F32Z-12A112-AA)

2. Install the ignition coil connector assembly by applying a downward force to the connector. Make certain all three (3) terminals on the ignition coil connector mate properly on the ignition coil.

3. Install screw that attaches the terminal of the ignition coil connector to the stator assembly. Torque screw to 0.6-1.0 N.m (5-10 lb-in).

4. Install screw that attaches the condenser of the ignition coil connector to the distributor housing. Torque screw to 1.6-2.9 N.m (14-26 lb-in).

CAUTION:
CARE MUST BE TAKEN IN ORDER TO ASSURE PROPER ORIENTATION OF THE VANES TO THE ARMATURE SHAFT TO AVOID DAMAGING THE VANES.

5. Install the spacer and vanes onto the armature shaft.

6. Install the rotor drive.

7. Install armature shaft center screw. Torque screw to 4.7-5.1 N.m (41-46 lb-in).

NOTE:
VERIFY ROTATION OF ARMATURE SHAFT TO ASSURE THERE IS NO INTERFERENCE.

8. Install the stator cover and screws Torque screws to 4.7-5.1 N.m (41-46 lb-in).

9. Install distributor gasket, rotor, and cap. Torque distributor cap to 1.0-1.9 N.m (9-17 lb-in).

10. Install engine air cleaner. Refer to the Service Manual, Section 03-12A.

PART NUMBER	PART NAME
F32Z-12A112-AA	Stator Assembly

PART INFORMATION

OTHER APPLICABLE ARTICLES: NONE
WARRANTY STATUS: INFORMATION ONLY
OASIS CODES: 602300, 603300, 607000, 607400, 614000

Technical Service Bulletin # **97-14-12** Date: **970707**

97-14-12 - 07/07/97

This TSB number 97-14-12, dated 07/07/97 has been superceded by TSB number 97-17-14 , dated 08/18/97

Technical Service Bulletin # **97-14-11** Date: **970707**

97-14-11 - 07/07/97

This TSB number 97-14-11, dated 07/07/97 has been superceded by TSB number 97-17-13 , dated 08/18/97

Technical Service Bulletin # **9621** Date: **960115**

Front Door Glass - Water Leak/Wind Noise

This TSB number 9621, dated 01/15/96 has been superceded by TSB number 97-19-1 , dated 09/15/97

Technical Service Bulletin # **93221** Date: **931027**

Front Door Glass - Water Leaks/Wind Noise

This TSB number 93221, dated 10/27/93 has been superceded by TSB number 9454 , dated 03/09/94

Technical Service Bulletin # **9751** Date: **970303**

Leather Seat - Cleaning Procedure Tips

This TSB number 9751, dated 03/03/97 has been superceded by TSB number 98-17-1 , dated 09/01/98
Technical Service Bulletin # **97-14-2** Date: **970707**

Seat Leather - Cleaning Procedure

This TSB number 97-14-2, dated 07/07/97 has been superceded by TSB number 98-17-1 , dated 09/01/98
Technical Service Bulletin # **95251** Date: **951218**

Sliding Roof Panel - Rattle/Squeak/Creak Noise

This TSB number 95251, dated 12/18/95 has been superceded by TSB number 97-17-3 , dated 08/18/97
Technical Service Bulletin # **93161** Date: **930804**

Ashtray Cover - Falls Into Center Console

This TSB number 93161, dated 08/04/93 has been superceded by TSB number 93212 , dated 10/13/93
Technical Service Bulletin # **9343** Date: **930217**

Remote Keyless Entry System - Features

This TSB number 9343, dated 02/17/93 has been superceded by TSB number 932412 , dated 11/24/93
Technical Service Bulletin # **96144** Date: **960701**

A/C - Musty and Mildew Type Odors

This TSB number 96144, dated 07/01/96 has been superceded by TSB number 98-2-7 , dated 02/02/98
Technical Service Bulletin # **98-10-4** Date: **980526**

A/C - Identification Of Non Approved Refrigerants

This TSB number 98-10-4, dated 05/26/98 has been superceded by TSB number 99-19-6 , dated 09/20/99
Technical Service Bulletin # **97-14-9** Date: **970707**

Air Conditioning - Musty Odors

This TSB number 97-14-9, dated 07/07/97 has been superceded by TSB number 98-2-7 , dated 02/02/98
Technical Service Bulletin # **96209** Date: **960923**

A/C - R134A Retrofit Kit Availability

This TSB number 96209, dated 09/23/96 has been superceded by TSB number 98-4-8 , dated 03/02/98
Technical Service Bulletin # **96157** Date: **960715**

A/C - R12 to R134a Retrofit Kit Availability

This TSB number 96157, dated 07/15/96 has been superceded by TSB number 98-4-8 , dated 03/02/98
Technical Service Bulletin # **9581** Date: **950424**

A/C - Approved Flushing Procedures

This TSB number 9581, dated 04/24/95 has been superceded by TSB number 95184 , dated 09/11/95
Technical Service Bulletin # **9399** Date: **930428**

Air Conditioning - Musty or Mildew Type Odors

This TSB number 9399, dated 04/28/93 has been superceded by TSB number 98-2-7 , dated 02/02/98
Technical Service Bulletin # **92256** Date: **921202**

A/C System - Musty/Mildew Odors

This TSB number 92256, dated 12/02/92 has been superceded by TSB number 98-2-7 , dated 02/02/98
Technical Service Bulletin # **93104** Date: **930512**

A/C - Evaporator Core Leak Test

This TSB number 93104, dated 05/12/93 has been superceded by TSB number 95131 , dated 07/03/95
Technical Service Bulletin # **94107** Date: **940518**

A/C Evaporator - Leak Test Required For Warranty Claim

This TSB number 94107, dated 05/18/94 has been superceded by TSB number 95131 , dated 07/03/95
Technical Service Bulletin # **93155** Date: **930721**

A/C - O Ring Removal From Spring Lock Coupling

This TSB number 93155, dated 07/21/93 has been superceded by TSB number 9522 , dated 01/30/95

Technical Service Bulletin # **99-6-3** Date: **990405**

Wire Splicing And Wire Harness- Terminal Repair Kit

This TSB number 99-6-3, dated 04/05/99 has been superceded by TSB number 01-10-12 , dated 05/28/01

Technical Service Bulletin # **99-22-2** Date: **991101**

Wire Harness - Terminal Repair Kit/Wire Splice Procedure

This TSB number 99-22-2, dated 11/01/99 has been superceded by TSB number 01-10-12 , dated 05/28/01

Technical Service Bulletin # **98-11-3** Date: **980608**

Wire Harness - Terminal Repair And Wire Splice Kit

This TSB number 98-11-3, dated 06/08/98 has been superceded by TSB number 01-10-12 , dated 05/28/01

Technical Service Bulletin # **97-24-14** Date: **971124**

Wire Harness - Terminal Repair Kit/Wire Splice Repair

This TSB number 97-24-14, dated 11/24/97 has been superceded by TSB number 01-10-12 , dated 05/28/01

Technical Service Bulletin # **96163** Date: **960729**

Wire Harness - Terminal Repair Kit/Splice Procedure

This TSB number 96163, dated 07/29/96 has been superceded by TSB number 01-10-12 , dated 05/28/01

Technical Service Bulletin # **94254** Date: **941212**

Engine - Hard Start or No Start

This TSB number 94254, dated 12/12/94 has been superceded by TSB number 9558 , dated 03/13/95

Technical Service Bulletin # **95212** Date: **951023**

Brakes - Special Lubricant Requirements

This TSB number 95212, dated 10/23/95 has been superceded by TSB number 98-5A-13 , dated 03/18/98

Technical Service Bulletin # **98-4-5** Date: **980302**

Brakes - Roughness/Vibration

This TSB number 98-4-5, dated 03/02/98 has been superceded by TSB number 98-5A-5 , dated 03/18/98

Technical Service Bulletin # **98-1-4** Date: **980119**

Brake Rotor - Hub Mounted Machining Equipment

This TSB number 98-1-4, dated 01/19/98 has been superceded by TSB number 98-5A-5 , dated 03/18/98

Technical Service Bulletin # **96222** Date: **961021**

Brakes - Rotor/Drum Sanding Elimination

This TSB number 96222, dated 10/21/96 has been superceded by TSB number 98-5A-11 , dated 03/18/98

Technical Service Bulletin # **93133** Date: **930623**

Brake Rotor - Machining With On-Vehicle Equipment

This TSB number 93133, dated 06/23/93 has been superceded by TSB number 94252 , dated 12/12/94

Technical Service Bulletin # **00-1-5** Date: **000110**

A/T - New Transmission Cooler Flusher/Service Tip

This TSB number 00-1-5, dated 01/10/00 has been superceded by TSB number 03-14-8 , dated 07/21/03

Technical Service Bulletin # **01-18-1** Date: **010917**

Shift Interlock (BRAKE) - Inadvertent Disabling

This TSB number 01-18-1, dated 09/17/01 has been superceded by TSB number 02-17-6 , dated 09/02/02

Technical Service Bulletin # **99-13-9** Date: **990628**

Brake Shift Interlock - Inadvertent Disabling

This TSB number 99-13-9, dated 06/28/99 has been superceded by TSB number 02-17-6 , dated 09/02/02

Technical Service Bulletin # **9758** Date: **970303**

A/T - 4EAT Harsh 1-2 Shift

This TSB number 9758, dated 03/03/97 has been superceded by TSB number 9774 , dated 03/31/97

Technical Service Bulletin # **9768** Date: **970317**

Fuel Economy - Customer Expectations Vs. Vehicle Usage
This TSB number 9768, dated 03/17/97 has been superceded by TSB number 99-26-9 , dated 12/27/99
Technical Service Bulletin # **94123** Date: **940615**

Fuel - Volatility Related Concerns
This TSB number 94123, dated 06/15/94 has been superceded by TSB number 98-26-2 , dated 01/04/99
Technical Service Bulletin # **95122** Date: **950612**

Fuel Economy - Expectations Versus Usage
This TSB number 95122, dated 06/12/95 has been superceded by TSB number 99-26-9 , dated 12/27/99
Technical Service Bulletin # **98-7-3** Date: **980413**

Speaker - Whining/Buzzing Noise
This TSB number 98-7-3, dated 04/13/98 has been superceded by TSB number 01-7-3 , dated 04/16/01
Technical Service Bulletin # **94215** Date: **940126**

Fuel Pump and Bracket - Return of Obsolete Parts
This TSB number 94215, dated 01/26/94 has been superceded by TSB number 9444 , dated 02/23/94
Technical Service Bulletin # **99-12-9** Date: **990614**

Speakers - Whining/Buzzing Noise
This TSB number 99-12-9, dated 06/14/99 has been superceded by TSB number 01-7-3 , dated 04/16/01
Technical Service Bulletin # **93184** Date: **930901**

Radio - Whine/Buzz
This TSB number 93184, dated 09/01/93 has been superceded by TSB number 01-7-3 , dated 04/16/01
Technical Service Bulletin # **93156** Date: **930721**

Radio - Buzzing/Whining Noise
This TSB number 93156, dated 07/21/93 has been superceded by TSB number 01-7-3 , dated 04/16/01
Technical Service Bulletin # **9654** Date: **960226**

Fuel - Volatility Related Driveability Information
This TSB number 9654, dated 02/26/96 has been superceded by TSB number 98-26-2 , dated 01/04/99
Technical Service Bulletin # **93154** Date: **930721**

Air Bag - Code 34/Warning Lamp ON
This TSB number 93154, dated 07/21/93 has been superceded by TSB number 93173 , dated 08/18/93
Technical Service Bulletin # **9497** Date: **940504**

Check Engine Light - Comes ON Intermittently
This TSB number 9497, dated 05/04/94 has been superceded by TSB number 95215 , dated 10/23/95
Technical Service Bulletin # **98-6-4** Date: **980330**

Exhaust System - Buzzing/Rattling Noises
This TSB number 98-6-4, dated 03/30/98 has been superceded by TSB number 98-20-10 , dated 10/12/98
Technical Service Bulletin # **97-16-6** Date: **970804**

Exhaust System - Rattling/Buzzing Noise
This TSB number 97-16-6, dated 08/04/97 has been superceded by TSB number 98-20-10 , dated 10/12/98
Technical Service Bulletin # **94710** Date: **940406**

Exhaust System - Buzz/Rattle Noise
This TSB number 94710, dated 04/06/94 has been superceded by TSB number 98-20-10 , dated 10/12/98
Technical Service Bulletin # **01-15-6** Date: **010806**

Heater Core - Repeated Failure
This TSB number 01-15-6, dated 08/06/01 has been superceded by TSB number 06-21-19 , dated 10/30/06
Technical Service Bulletin # **931210** Date: **930609**

Engine - Vibration/Resonance When Idling
This TSB number 931210, dated 06/09/93 has been superceded by TSB number 93188 , dated 09/01/93
Technical Service Bulletin # **94127** Date: **940615**

Engine - Metallic Ticking From Hydraulic Lifters
This TSB number 94127, dated 06/15/94 has been superceded by TSB number 96213 , dated 10/07/96
Technical Service Bulletin # **01-15-7** Date: **010806**

A/T - Fluid Application Charts
This TSB number 01-15-7, dated 08/06/01 has been superceded by TSB number 06-14-4 , dated 07/24/06
Technical Service Bulletin # **92173** Date: **920812**

A/C System - New A/C Filter Kit
This TSB number 92173, dated 08/12/92 has been superceded by TSB number 98-12-5 , dated 06/22/98
Technical Service Bulletin # **9398** Date: **930428**

Air Conditioning - Prevent Damage to Compressor
This TSB number 9398, dated 04/28/93 has been superceded by TSB number 98-12-5 , dated 06/22/98
Technical Service Bulletin # **9545** Date: **950227**

A/C - Refrigerant Filtering Tips
This TSB number 9545, dated 02/27/95 has been superceded by TSB number 98-12-5 , dated 06/22/98
Technical Service Bulletin # **95242** Date: **951204**

A/C - Refrigerant Filtering Service Tips
This TSB number 95242, dated 12/04/95 has been superceded by TSB number 98-12-5 , dated 06/22/98
Technical Service Bulletin # **96155** Date: **960715**

A/C System - Refrigerant Filtering Service Tips
This TSB number 96155, dated 07/15/96 has been superceded by TSB number 98-12-5 , dated 06/22/98
Technical Service Bulletin # **9564** Date: **950327**

Wheels - Proper Lug Torque Procedures
This TSB number 9564, dated 03/27/95 has been superceded by TSB number 98-5A-4 , dated 03/18/98
Technical Service Bulletin # **97-17-6** Date: **970818**

Brakes - Vibration Prevention Service tip
This TSB number 97-17-6, dated 08/18/97 has been superceded by TSB number 98-5A-4 , dated 03/18/98
Technical Service Bulletin # **94108** Date: **940518**

Propylene Glycol Coolant - Recommendations
This TSB number 94108, dated 05/18/94 has been superceded by TSB number 01-23-6 , dated 11/26/01
Technical Service Bulletin # **95166** Date: **950814**

Recycled Engine Coolant - Service Tip
This TSB number 95166, dated 08/14/95 has been superceded by TSB number 95182 , dated 09/11/95
Technical Service Bulletin # **96164** Date: **960729**

Propylene Glycol Coolant - Recommendation
This TSB number 96164, dated 07/29/96 has been superceded by TSB number 01-23-6 , dated 11/26/01
Technical Service Bulletin # **97511** Date: **970303**

A/T - Transmission Fluid Usage Charts
This TSB number 97511, dated 03/03/97 has been superceded by TSB number 06-14-4 , dated 07/24/06
Technical Service Bulletin # **98-8-8** Date: **980427**

Automatic Transmission - Fluid Usage Charts
This TSB number 98-8-8, dated 04/27/98 has been superceded by TSB number 06-14-4 , dated 07/24/06
Technical Service Bulletin # **93268** Date: **931222**

A/C - Filter Kit Installation After Replacing Compressor

This TSB number 93268, dated 12/22/93 has been superceded by TSB number 98-12-5 , dated 06/22/98
Technical Service Bulletin # **9434** Date: **940209**

A/C Compressor Replacement - Refrigerant Filtering

This TSB number 9434, dated 02/09/94 has been superceded by TSB number 98-12-5 , dated 06/22/98
Technical Service Bulletin # **932311** Date: **931110**

A/C System - Use of R12 Refrigerant Substitutes

This TSB number 932311, dated 11/10/93 has been superceded by TSB number 961710 , dated 08/12/96
Technical Service Bulletin # **94155** Date: **940727**

Air Conditioning - Filtering Refrigerant

This TSB number 94155, dated 07/27/94 has been superceded by TSB number 98-12-5 , dated 06/22/98
Technical Service Bulletin # **95253** Date: **951218**

A/C - Non Approved Refrigerants

This TSB number 95253, dated 12/18/95 has been superceded by TSB number 99-19-6 , dated 09/20/99
Technical Service Bulletin # **95227** Date: **951106**

A/C - Approved/Alternate Refrigerants

This TSB number 95227, dated 11/06/95 has been superceded by TSB number 99-19-6 , dated 09/20/99
Technical Service Bulletin # **97-19-10** Date: **970915**

A/C - Identification of Non-Approved Refrigerants

This TSB number 97-19-10, dated 09/15/97 has been superceded by TSB number 99-19-6 , dated 09/20/99
Technical Service Bulletin # **98-12-8** Date: **980622**

A/C - Identifying Non-Approved Refrigerants

This TSB number 98-12-8, dated 06/22/98 has been superceded by TSB number 99-19-6 , dated 09/20/99
Technical Service Bulletin # **93246** Date: **931124**

Vehicle - Towing Guidelines

This TSB number 93246, dated 11/24/93 has been superceded by TSB number 98-5A-12 , dated 03/18/98
Technical Service Bulletin # **98-5A-12** Date: **980318**

Vehicle - Towing Behind RVs Guidelines

Article No.
98-5A-12

03/18/98

^ BRAKES - WEIGHT LIMITATIONS FOR TOWING

^ RECREATIONAL VEHICLES - WEIGHT RATINGS FOR UNBRAKED TOWING LESS THAN GROSS COMBINATION WEIGHT RATING (GCWR)

^ TOWING BEHIND RECREATIONAL VEHICLES - RECOMMENDED GUIDELINES

^ TRANSAXLE/TRANSMISSION/TRANSFER CASE - VEHICLES TOWED BEHIND RECREATIONAL VEHICLES - RECOMMENDED TOWING GUIDELINES

FORD:
1988-93 FESTIVA
1988-94 TEMPO
1989-96 PROBE, TAURUS SHO
1991-97 ESCORT
1994-96 ASPIRE

LINCOLN-MERCURY:
1988-94 TOPAZ
1991-94 CAPRI
1991-97 TRACER

1993 Ford Probe L4-121 2.0L DOHC VIN A MFI

LIGHT TRUCK:
1988-96 AEROSTAR, BRONCO, E-350, F SUPER DUTY, F-250, F-350, F-53 MOTORHOME, RANGER
1988-97 F-150
1991-96 EXPLORER
1997 MOUNTAINEER

ISSUE:
Many motorhome owners tow a vehicle when traveling. Improper techniques can "overload" the brake system of the tow vehicle or damage the drivetrain of the vehicle being towed.

ACTION:
Use the information and charts shown in this TSB article to properly match tow vehicle, towed vehicle and towing method.

TOWING METHODS

1. TRAILER - The vehicle is loaded onto and secured to a trailer and simply acts as "secured" cargo.

2. DOLLY - The vehicle is "partially" loaded and partially towed. Either front or rear wheels are loaded and secured to a "towing dolly" and the other wheels roll on the road.

3. TOW BAR - All of the vehicle wheels roll on the pavement. The towed vehicle's steering column must be unlocked so that it can track correctly behind the tow vehicle.

WEIGHT RATINGS AND BRAKES

^ GVWR (Gross Vehicle Weight Rating) - is the MAXIMUM allowable weight of the towing vehicle, passengers and cargo

^ GCWR (Gross Combined Weight Rating) - is the MAXIMUM allowable weight of the towing vehicle and the weight of the trailer or vehicle being towed, including all passengers and cargo

^ BRAKES - The motorhome brakes are designed and rated for the GVWR of that vehicle and will provide adequate braking for trailers and towing vehicles up to 680 kg (1500 lb)

CAUTION:
SEPARATE AUXILIARY BRAKES ARE REQUIRED ON TRAILERS OR TOWED VEHICLES OVER 680 KG (1500 LBS). DO NOT CONNECT A TRAILER'S, DOLLY'S OR OTHER TOWED VEHICLE'S BRAKE SYSTEM TO THE TOWING VEHICLE'S BRAKE SYSTEM.

TOWED VEHICLES

1. Trailer-towed - The vehicle should be loaded on the trailer in a manner to:

   a. achieve a trailer tongue load of 10-15% of total trailer weight,

   b. not exceed the trailer or hitch ratings and

   c. be securely tied down.

2. Dolly-towed - For front wheel drive vehicles, towing an automatic transaxle (ATX)-equipped vehicle behind another vehicle, such as a Recreational Vehicle (RV), requires that a front wheel dolly or trailer be used.

NOTE:
TEMPO ALL-WHEEL DRIVE MODELS MUST BE TRAILER-TOWED. DO NOT TOW THESE VEHICLES USING A TWO-WHEEL TOWING DOLLY.

CAUTION:
DO NOT TOW A VEHICLE WITH AN AUTOMATIC (ATX) TRANSAXLE WITH THE DRIVE WHEELS ON THE GROUND. DAMAGE TO THE TRANSAXLE MAY RESULT.

FORD-BUILT VEHICLES APPROVED FOR DINGHY TOWING		
VEHICLE	MANUAL TRANSMISSION	AUTOMATIC TRANSMISSION
FORD CARS		
ASPIRE	YES	NO
FESTIVA	YES	NO
ESCORT	YES	NO
TEMPO	YES	NO
PROBE	YES	NO
TAURUS (SHO ONLY)	YES	NO
LINCOLN-MERCURY CARS		
TRACER	YES	NO
TOPAZ	YES	NO
CAPRI	YES	NO
FORD TRUCKS		
RANGER 4X2	YES	NO
RANGER 4X4	YES	YES**
EXPLORER 4X2	YES	NO
EXPLORER 4X4	YES	YES**
AEROSTAR 2WD	YES	NO
F-SERIES 4X4	YES**	YES**
BRONCO 4X4	YES**	YES**
E-350	YES	NO
MOUNTAINEER 4X2	YES	NO
MOUNTAINEER 4X4	YES	YES**

**Manual transfer case only (not Touch Drive Electric Shift).

3. Tow Bar-towed - Vehicles which can be successfully towed with a tow bar are listed in the following chart. Additional vehicle-specific information follows the chart.

ALL VEHICLES

NOTE:
DO NOT TOW ANY VEHICLE AT A SPEED FASTER THAN 88 KM/H (55 MPH). THE MAXIMUM TOWING DISTANCE (WHEN TOWED CORRECTLY) IS UNLIMITED.

WARNING:
NEVER USE A TOW BAR THAT ATTACHES ONLY TO THE BUMPER.

MTX-EQUIPPED VEHICLES

Towing a manual transaxle (MTX)-equipped vehicle with the drive wheels on the ground is acceptable only if the vehicle is towed in a forward direction. The parking brake must be released and the gear shift lever must be in Neutral.

^ For Aspire, Festiva, Escort and Tracer, the ignition key must be in the ACO position, the battery must be disconnected to eliminate battery drain, and the steering wheel must be unlocked

^ For Capri, the ignition key must be in the OFF position and the steering wheel unlocked

^ Refer to the specific vehicle Owner Guide for complete details

CAUTION:
TOWING MTX-EQUIPPED VEHICLES INCORRECTLY MAY RESULT IN TRANSAXLE DAMAGE.

TRUCKS

^ The steering wheel must be unlocked by placing the ignition key in the OFF position

^ Manual transmission shift lever must be in Neutral

^ On 4X4 manual shift transfer cases, the shift lever must be in Neutral

^ 4X4 locking hubs (both manual and automatic) must be unlocked

^ Refer to the specific vehicle Owner Guide for complete details

OTHER APPLICABLE ARTICLES: NONE
SUPERSEDES: 93-24-6
WARRANTY STATUS: INFORMATION ONLY
OASIS CODES: 504000

A/C System - Service TSB List

Article No.
96-15-6

07/15/96

AIR CONDITIONING - FILTERING REFRIGERANT - SYSTEM FLUSHING - TRACER DYE - LEAK TESTING - O-RING TOOL - TSB REPUBLICATION TO INCLUDE LATEST MODEL YEAR

FORD:
1980-97 CROWN VICTORIA
1981-97 ESCORT
1982-83 FAIRMONT
1982-88 EXP
1982-97 MUSTANG, THUNDERBIRD
1983-86 LTD
1984-94 TEMPO
1986-97 TAURUS
1988-93 FESTIVA
1989-97 PROBE
1994-97 ASPIRE
1995-97 CONTOUR

LINCOLN-MERCURY:
1980-97 GRAND MARQUIS, TOWN CAR
1982-83 ZEPHYR
1982-86 CAPRI
1982-87 LN7
1982-97 CONTINENTAL, COUGAR
1983-86 MARQUIS
1984-92 MARK VII
1984-94 TOPAZ
1986-97 SABLE
1991-94 CAPRI
1991-97 TRACER
1993-97 MARK VIII
1995-97 MYSTIQUE

LIGHT TRUCK:
1980-96 BRONCO
1980-97 ECONOLINE, F-150-350 SERIES
1983-97 RANGER
1984-90 BRONCO II
1986-97 AEROSTAR
1988-97 F-47
1991-97 EXPLORER
1993-97 VILLAGER
1995-97 WINDSTAR
1997 EXPEDITION, MOUNTAINEER

ISSUE:
This TSB article is being published to inform technicians to refer to the following list of TSB's when performing service on an A/C system. These TSB's apply to all model year vehicles. These procedures also appear in the appropriate model/year Service Manuals and the procedures must be followed.

ACTION:
Refer to the following list of TSB's when performing service to a vehicle's A/C system.

^ 95-25-3 - Refrigerant Identification

^ 96-15-5 - A/C System Filtering

^ 95-18-4 - A/C System Flushing

^ 95-21-4 - A/C System Tracer Dye

^ 95-13-1 - A/C Evaporator Leak Test

^ 95-2-2 - Plastic 0-ring Tool

OTHER APPLICABLE ARTICLES: 95-13-1, 95-18-4, 95-2-2, 95-21-4, 95-25-3, 96-15-5

WARRANTY STATUS: INFORMATION ONLY

OASIS CODES: 208000, 208999

Technical Service Bulletin # **98-4-8** Date: **980302**

Air Conditioning - R12 to R134A Retrofit Kit

Article No.
98-4-8

03/02/98

AIR CONDITIONING - R-12 TO R-134A RETROFIT KIT AVAILABILITY - VEHICLES WITH FACTORY INSTALLED A/C ONLY

FORD:
1986-93 CROWN VICTORIA, TAURUS, THUNDERBIRD
1988-93 ESCORT, FESTIVA, MUSTANG, TEMPO
1989-93 PROBE

LINCOLN-MERCURY:
1986-92 MARK VII
1986-93 COUGAR, GRAND MARQUIS, SABLE, TOWN CAR
1987-93 TRACER
1988-93 CONTINENTAL, TOPAZ

LIGHT TRUCK:
1986-93 AEROSTAR
1988-90 BRONCO II
1988-93 BRONCO, ECONOLINE, F SUPER DUTY, F-150-350 SERIES, RANGER
1991-93 EXPLORER
1993 VILLAGER

MEDIUM/HEAVY TRUCK:
1985-91 CL-9000
1985-94 L SERIES
1985-95 F SERIES
1989-94 CARGO SERIES

This TSB article is being republished in its entirety to include the latest level parts.

ISSUE:
This TSB article announces the Ford OEM air conditioning retrofit kit availability. Retrofit kits convert R-12 air conditioning systems to operate on R-134a refrigerant. All Ford kits are designed for specific vehicles and offer equivalent performance to the original R-12 system.

ACTION:
When a consumer inquires about a retrofit kit, refer to the following Charts to see it a kit is available from Ford. If the vehicle is not listed, a kit is not available from Ford.

The Chart identifies which components are included in each kit for the purpose of providing repair estimates. Ford recommends the use of R-12 in R-12 A/C systems as long as it is available and cheaper then retrofitting to R-134a. Ford does not recommend the use of any refrigerant other than R-134a or R-12.

NOTE:
THE REMOVAL OF MINERAL OIL DURING THE RETROFIT IS NOT REQUIRED UNLESS NOTED UNDER THE "FLUSHING PROCEDURE" COLUMN (M) IN THE CHARTS FOUND IN THIS TSB ARTICLE. THE POLYALKYLENE GLYCOL (PAG), SUPPLIED IN EACH KIT, MUST BE ADDED WITH R-134a. PAG OIL, MINERAL OIL AND R-134a CAN BE MIXED TOGETHER IN THE A/C SYSTEM WITHOUT CAUSING DAMAGE.

NOTE:
HFC-134a IS THE ONLY CFC-12 (R-12) REPLACEMENT REFRIGERANT APPROVED BY FORD MOTOR COMPANY.

Detailed service procedure instructions are provided with each retrofit kit.

1993 Ford Probe L4-121 2.0L DOHC VIN A MFI

FORD/LINCOLN-MERCURY CAR APPLICATIONS																		
Vehicle	Model Year	Engine Size	Special Conditions	Kit Part Number	SRP*	Approximate Installation Time (Hrs.)***	A	B	C	D	E	F	G	H	J	K	L	M
Festiva	1988-93**	1.3		F3BZ-19D783-A	$100.00	1.0											X	X
Tracer	1987-90**	1.6		F0GY-19D783-A	$100.00	1.7											X	X
Escort / Tracer	1991-93	1.8	ATX	F3CZ-19D783-B	$146.67	1.0											X	
	1991-93	1.8	MTX	F3CZ-19D783-C	$253.33	1.3					X						X	
	1993	1.9		F3CZ-19D783-A	$253.33	1.5	X				X						X	
	1991-92	1.9		F2CZ-19D783-A	$253.33	1.5	X					X					X	
Escort	1988-90	1.9	CFI Only	F0CZ-19D783-B	$253.33	1.8	X					X					X	
	1989-90**	1.9	EFI & EFI HO Only	F0CZ-19D783-A	$350.00	2.1	X		X			X		X			X	
	1988**	1.9	EFI & EFI HO Only	E8CZ-19D783-A	$253.33	2.1	X		X			X		X			X	
Probe	1993**	2.0		F32Z-19D783-B	$600.00	3.1	X	X	X							X	X	X
	1990-92	2.2	Non-Turbo	F22Z-19D783-B	$400.00	1.9	X										X	
	1989-92	2.2	Turbo	F22Z-19D783-C	$146.67	1.0											X	
	1989	2.2	Non-Turbo	F22Z-19D783-C	$146.67	1.0											X	
	1993**	2.5		F32Z-19D783-A	$600.00	2.9	X	X	X							X	X	X
	1990-92	3.0		F22Z-19D783-A	$400.00	2.4	X				X						X	
Tempo / Topaz	1992-93	2.3	HSC	F33Z-19D783-A	$253.33	2.2											X	
	1988-91	2.3	HSC	F13Z-19D783-A	$253.33	1.8	X					X					X	
	1992-93	3.0		F43Z-19D783-B	$146.67	1.3											X	

* Suggested Retail Price (SRP) DOES NOT include the cost of refrigerant of refrigerant or A/C repairs necessary.

** System flushing is required. SRP DOES NOT include cost of flushing agent.

*** Approximate Installation times include the addition of refrigerant and system flushing

**** For L-Series vehicles built prior to the 1991 model year (vehicles built through December, 1991), replace the receiver/drier with an R-134a compatible receiver/drier. Refer to the following Compatibility Chart.

FORD/LINCOLN-MERCURY CAR APPLICATIONS (Continued)

Vehicle	Model Year	Engine Size	Special Conditions	Kit Part Number	SRP*	Approximate Installation Time (Hrs.)***	A	B	C	D	E	F	G	H	J	K	L	M
Mustang	1990-93	2.3		F3ZZ-19D783-A	$400.00	1.5	X										X	
	1988-93	5.0		F3ZZ-19D783-B	$500.00	2.9	X					X					X	
Taurus / Sable	1986-90	2.5		F0DZ-19D783-A	$253.33	2.6	X					X					X	
	1992-93	3.0		F3DZ-19D783-D	$253.33	2.0	X					X			X		X	
	1986-91	3.0		F1DZ-19D783-B	$253.33	2.4	X					X					X	
	1992-93	3.0	SHO	F3DZ-19D783-A	$253.33	1.9	X					X					X	
	1989-91	3.0	SHO	F1DZ-19D783-C	$253.33	2.2	X					X			X		X	
	1993	3.2	SHO	F3DZ-19D783-C	$253.33	2.4	X					X			X		X	
	1992-93	3.8		F3DZ-19D783-B	$146.67	2.3							X				X	
	1988-91	3.8		F1DZ-19D783-A	$253.33	2.6	X					X	X				X	
TBird / Cougar	1989-93	3.8		F3SZ-19D783-C	$253.33	1.5	X					X					X	
	1989-93**	3.8	Super Coupe	F3SZ-19D783-B	$253.33	2.2	X					X					X	X
	1991-93	5.0		F3SZ-19D783-C	$253.33	1.5	X					X					X	
	1986-88	5.0		E8SZ-19D783-A	$520.00	1.9					X	X					X	
Crown Vic / Grand Marquis	1992-93	4.6		F3AZ-19D783-A	$500.00	2.5	X		X	X		X		X			X	
	1992-93	4.6	Trailer Tow / Police	F3AZ-19D783-B	$146.67	2.3			X			X		X			X	
	1986-91	5.0		F1AZ-19D783-A	$390.00	2.4					X	X					X	
Continental	1991-93	3.8		F3OY-19D783-A	$253.33	2.7	X					X	X				X	
	1988-90	3.8		F0OY-19D783-A	$253.33	3.1	X					X	X				X	
Town Car	1991-93	4.6		F3VY-19D783-A	$500.00	2.5	X		X	X		X		X			X	
	1986-89	5.0		F0VY-19D783-A	$520.00	2.2	X				X	X					X	
	1990	5.0		F0VY-19D783-B	$520.00	2.2	X			X		X					X	
Mark VII	1989-92**	5.0		F2LY-19D783-A	$520.00	2.2	X		X		X						X	X
	1986-88**	5.0		E8LY-19D783-A	$520.00	2.2	X		X		X						X	X

* Suggested Retail Price (SRP) DOES NOT include the cost of refrigerant or A/C repairs necessary.
** System flushing is required. SRP DOES NOT include cost of flushing agent.
*** Approximate installation times include the addition of refrigerant and system flushing.
**** For L-Series vehicles built prior to the 1991 model year (vehicles built through December, 1991), replace the receiver/drier with an R-134a compatible receiver/drier. Refer to the following Compatibility Chart.

FORD/MERCURY LIGHT TRUCK APPLICATIONS

Vehicle	Model Year	Engine Size	Special Conditions	Kit Part Number	SRP*	Approximate Installation Time (Hrs.)***	A	B	C	D	E	F	G	H	J	K	L	M
Ranger	1993	2.3, 3.0, 4.0		F37Z-19D783-A	$666.67	2.8					X	X					X	
	1990-92	2.3, 2.9, 3.0, 4.0		F27Z-19D783-A	$520.00	2.2	X				X	X					X	
	1989	2.9	w/ Auto. Trans.	FO7Z-19D783-A	$350.00	1.9						X					X	
	1989	2.3, 2.9	Exc. 2.9 w/ Auto. Trans.	F37Z-19D783-B	$520.00	1.9	X					X					X	
	1988	2.0, 2.3, 2.9		E87Z-19D783-A	$520.00	1.9	X					X					X	
Bronco II	1990	2.9		F27Z-19D783-A	$520.00	1.4	X				X	X					X	
	1989	2.9	w/ Manual Trans.	F37Z-19D783-B	$520.00	1.9	X					X					X	
	1989	2.9	w/ Auto. Trans.	FO7Z-19D783-A	$350.00	1.9						X					X	
	1988	2.9		E87Z-19D783-A	$520.00	1.9	X					X					X	
Villager	1993	3.0		F3XY-19D783-A	$146.67	1.1											X	
Aerostar	1986-93	3.0		F39Z-19D783-B	$520.00	2.4	X					X					X	
	1990-93	4.0	2-Wheel Drive	F39Z-19D783-C	$520.00	2.4	X					X					X	
	1990-93	4.0	4-Wheel Drive	F39Z-19D783-A	$520.00	2.4	X					X					X	
Explorer	1991-93	4.0		F3TZ-19D783-D	$600.00	2.3					X	X					X	
Bronco	1992	4.9		F3TZ-19D783-A	$600.00	2.5	X			X		X					X	
	1988-91	4.9		F1TZ-19D783-B	$600.00	2.5	X			X		X					X	
	1992-93	5.0, 5.8		F3TZ-19D783-B	$600.00	2.5	X			X		X					X	
	1988-91	5.0, 5.8		F1TZ-19D783-A	$600.00	2.5	X			X		X					X	

* Suggested Retail Price (SRP) DOES NOT include the cost of refrigerant or A/C repairs necessary.
** System flushing is required. SRP DOES NOT include cost of flushing agent.
*** Approximate installation times include the addition of refrigerant and system flushing.
**** For L-Series vehicles built prior to the 1991 model year (vehicles built through December, 1991), replace the receiver/drier with an R-134a compatible receiver/drier. Refer to the following Compatibility Chart.

FORD/MERCURY LIGHT TRUCK APPLICATIONS (Continued)

Vehicle	Model Year	Engine Size	Special Conditions	Kit Part Number	SRP*	Approximate Installation Time (Hrs.)***	A	B	C	D	E	F	G	H	J	K	L	M
F-Series	1992-93	4.9		F3TZ-19D783-A	$600.00	2.5	X			X		X					X	
	1988-91	4.9		F1TZ-19D783-B	$600.00	2.5	X			X		X					X	
	1992-93	5.0, 5.8		F3TZ-19D783-B	$600.00	2.5	X			X		X					X	
	1988-91	5.0, 5.8		F1TZ-19D783-A	$600.00	2.5	X			X		X					X	
	1992-93	Diesel		F3TZ-19D783-E	$666.67	2.8	X					X					X	
	1988-91	Diesel		F1TZ-19D783-D	$600.00	2.8	X					X					X	
	1992-93	7.5		F3TZ-19D783-C	$600.00	2.1	X					X					X	
	1988-91	7.5		F1TZ-19D783-C	$666.67	2.1	X					X					X	
Econoline	1992-93	4.9, 7.5		F3UZ-19D783-A	$600.00	2.5	X					X					X	
	1988-92	4.9		F1UZ-19D783-A	$600.00	2.9	X			X		X					X	
	1992-93	5.0, 5.8		F3UZ-19D783-B	$666.67	2.5	X			X		X					X	
	1988-91	5.0, 5.8		F1UZ-19D783-B	$600.00	2.9	X			X		X					X	
	1992-93	Diesel		F3UZ-19D783-C	$600.00	2.2	X					X					X	
	1988-91	7.5, Diesel		F1UZ-19D783-C	$600.00	2.2	X					X					X	

* Suggested Retail Price (SRP) DOES NOT include the cost of refrigerant or A/C repairs necessary.
** System flushing is required. SRP DOES NOT include cost of flushing agent.
*** Approximate installation times include the addition of refrigerant and system flushing.
**** For L-Series vehicles built prior to the 1991 model year (vehicles built through December, 1991), replace the receiver/drier with an R-134a compatible receiver/drier. Refer to the following Compatibility Chart.

FORD MEDIUM/HEAVY TRUCK APPLICATIONS

Vehicle	Model Year	Engine Size	Special Conditions	Kit Part Number	SRP*	Approximate Installation Time (Hrs.)***	A	B	C	D	E	F	G	H	J	K	L	M
F-Series Medium Duty	1985-95	All		F4HZ-19D783-A	$210.69	2.0											X	
L-Series****	1985-94.5	All	See TSB 95-10-16	F4HZ-19D783-A	$210.69	2.0											X	
CL-Series	All	All		F4HZ-19D783-B	$69.89	2.0											X	
CF-Series Cargo	1989-94.5	All	w/ Signet A/C Kit	F4HZ-19D783-C	$194.69	2.0											X	

* Suggested Retail Price (SRP) DOES NOT include the cost of refrigerant or A/C repairs necessary.
** System flushing is required. SRP DOES NOT include cost of flushing agent.
*** Approximate installation times include the addition of refrigerant and system flushing.
**** For L-Series vehicles built prior to the 1991 model year (vehicles built through December, 1991), replace the receiver/drier with an R-134a compatible receiver/drier. Refer to the following Compatibility Chart.

FORD/MERCURY LIGHT TRUCK APPLICATIONS (Continued)

Vehicle	Model Year	Engine Size	Special Conditions	Kit Part Number	SRP*	Approximate Installation Time (Hrs.)***	A	B	C	D	E	F	G	H	J	K	L	M
F-Series	1992-93	4.9		F3TZ-19D783-A	$600.00	2.5	X			X		X					X	
	1988-91	4.9		F1TZ-19D783-B	$600.00	2.5	X			X		X					X	
	1992-93	5.0, 5.8		F3TZ-19D783-B	$600.00	2.5	X			X		X					X	
	1988-91	5.0, 5.8		F1TZ-19D783-A	$600.00	2.5	X			X		X					X	
	1992-93	Diesel		F3TZ-19D783-E	$666.67	2.8	X					X					X	
	1988-91	Diesel		F1TZ-19D783-D	$600.00	2.8	X					X					X	
	1992-93	7.5		F3TZ-19D783-C	$600.00	2.1	X					X					X	
	1988-91	7.5		F1TZ-19D783-C	$666.67	2.1	X					X					X	
Econoline	1992-93	4.9, 7.5		F3UZ-19D783-A	$600.00	2.5	X					X					X	
	1988-92	4.9		F1UZ-19D783-A	$600.00	2.9	X			X		X					X	
	1992-93	5.0, 5.8		F3UZ-19D783-B	$666.67	2.5	X			X		X					X	
	1988-91	5.0, 5.8		F1UZ-19D783-B	$600.00	2.9	X			X		X					X	
	1992-93	Diesel		F3UZ-19D783-C	$600.00	2.2	X					X					X	
	1988-91	7.5, Diesel		F1UZ-19D783-C	$600.00	2.2	X					X					X	

* Suggested Retail Price (SRP) DOES NOT Include the cost of refrigerant or A/C repairs necessary.
** System flushing is required. SRP DOES NOT include cost of flushing agent.
*** Approximate installation times Include the addition of refrigerant and system flushing.
**** For L-Series vehicles built prior to the 1991 model year (vehicles built through December, 1991), replace the receiver/drier with an R-134a compatible receiver/drier. Refer to the following Compatibility Chart.

R-134a COMPATIBLE RECEIVER/DRIERS FOR PRE-1991-1/2 L-SERIES

R-12 Production Part	R-12 Service Part	R-134a Replacement
E7HT-19959-AB		F4HZ-19959-C
E7HT-19959-BA		F4HZ-19959-D
E7HT-19959-CA		F4HZ-19959-E
FOHT-19959-BA		F4HZ-19959-F
	F2HZ-19959-A	F4HZ-19959-G

Heading definitions for lettered columns found in the following chants:

^ A = Condenser

^ B = Compressor

^ C = Accumulator

^ D = Engine Fan and Clutch

^ E = Electric Fan

^ F = Air Deflectors

^ G = Control Module

^ H = Suction Hose

^ J = Condenser-To-Compressor Discharge Hose

^ K = Orifice Tube

^ L = Miscellaneous

^ M = Flushing Procedures

Miscellaneous kit items for all systems include: Cycling Pressure Switch (CPS), CPS adapter, Refrigerant Containment Switch (RCS), RCS wiring harness assembly, RCS adapter, low side service port adapter, high side charge port adapter, PAG oil, and retrofit label.

OTHER APPLICABLE ARTICLES: 95-10-16

SUPERSEDES: 96-20-9

WARRANTY STATUS: INFORMATION ONLY

OASIS CODES: 205000, 208000, 208200, 208999

Technical Service Bulletin # **98-2-7** Date: **980202**

Air Conditioning - Musty/Mildew Type Odors

Article No.
98-2-7

02/02/98

AIR CONDITIONING - MUSTY AND MILDEW TYPE
ODORS - SERVICE PROCEDURE

FORD:
1992-93 FESTIVA
1992-94 TEMPO
1992-97 CROWN VICTORIA, ESCORT, MUSTANG, PROBE, TAURUS, THUNDERBIRD
1994-96 ASPIRE
1995-97 CONTOUR

LINCOLN-MERCURY:
1992-94 TOPAZ
1992-97 CONTINENTAL, COUGAR, GRAND MARQUIS, SABLE, TOWN CAR, TRACER
1993-97 MARK VIII
1995-97 MYSTIQUE

LIGHT TRUCK:
1992-96 BRONCO
1992-97 AEROSTAR, ECONOLINE, EXPLORER, F SUPER DUTY F-150, F-250 HD, F-250 LD, F-350, RANGER
1995-98 WINDSTAR
1997 MOUNTAINEER
1997-98 EXPEDITION
1998 NAVIGATOR

MEDIUM/HEAVY TRUCK:
1992-97 F & B SERIES

This TSB article is being republished in its entirety to include the Expedition, Navigator and 1998 Windstar.

ISSUE

Musty and mildew type odors may come from the air conditioner and heater system. This odor is caused by mildew-type fungi growth in the A/C evaporator. It is most noticeable when the A/C is first turned on.

ACTION

A new Disodorizer(R) which encapsulates the mildew is now available to reduce these odors. This is a seasonal repair. Engineering effort to provide a long term repair for A/C odors will continue. Apply the Ford A/C Disodorizer(R) product (F6AZ-19G210-AA or YN-18) to the A/C system as directed in the following A/C Odor Treatment Procedure.

WARNING:
AVOID CONTACT WITH EYES AND SKIN. CONTACT WITH EYES AND SKIN WILL CAUSE IRRITATION. WEAR SAFETY GLASSES WHEN USING.

WARNING:
THIS PROCEDURE SHOULD ONLY BE PERFORMED IN WELL VENTILATED AREAS. OPEN ALL WINDOWS AND DOORS OF THE VEHICLE. LEAVE DOORS AND WINDOWS OPEN DURING THE ENTIRE PROCEDURE. AVOID BREATHING VAPORS.

WARNING:
AVOID FLAMES, SPARKS OR LIT TOBACCO PRODUCTS. THIS PRODUCT IS COMBUSTIBLE.

WARNING:
READ ALL INSTRUCTIONS AND WARNINGS PACKAGED WITH THE DISODORIZER(R).

OTHER APPLICABLE ARTICLES: 89-25B-1, 97-14-19

1993 Ford Probe L4-121 2.0L DOHC VIN A MFI

SUPERSEDES: 97-14-9

WARRANTY STATUS: Eligible Under The Provisions Of Bumper To Bumper Warranty Coverage

OPERATION	DESCRIPTION	TIME
980207A	Apply Disodorizer(R)	0.3 Hr.

DEALER CODING

BASIC PART NO.	CONDITION CODE
ODOR	49

OASIS CODES: 208000, 208300

A/C Order Treatment Procedure

NOTE:

THIS PROCEDURE WILL NOT BE EFFECTIVE ON ODORS EMITTED FROM AREAS OTHER THAN THE EVAPORATOR CORE. FOR EXAMPLE: MILDEW ODORS DUE TO WET CARPET WHICH ARE CIRCULATED BY THE A/C SYSTEM. BE SURE YOU HAVE IDENTIFIED THE TYPE AND SOURCE OF ODOR BEFORE PERFORMING THIS REPAIR.

The A/C System Disodorizer(R) (F6AZ-19G210-AA or YN-18) is a full strength disodorizer which requires no dilution or mixing. Each vehicle treated will require 240 ML (8 fluid ounces) to complete the procedure.

NOTE:

THE ROTUNDA A/C DISODORIZER(R) SPRAYER 164-R4700 IS ONLY TO BE USED WITH THE YN-18 A/C SYSTEM DISODORIZER(R) AND SHOULD NOT BE USED FOR ANY OTHER PURPOSE.

DISODORIZER® APPLICATION LOCATION

Model Year	Vehicle	Blower Motor	Blower Motor Resistor/Controller
1992-97	Aerostar	X	
1992-96	Bronco	X	
1992-94	Continental	X	
1992-97	Econoline	X	
1992-97	Escort/Tracer	X	
1992-97	Explorer	X	
1992-97	F-150-350 Series	X	
1994-97	Probe	X	
1992-97	Ranger	X	
1992-97	Taurus/Sable	X	
1995-97	Windstar	X	
1994-96	Aspire		X
1995-97	Continental		X
1992-97	Crown Victoria/Grand Marquis		X
1992-97	Town Car		X
1992-93	Festiva		X
1992-97	F & B Series		X
1993-97	Mark VIII		X
1992-97	Mustang		X
1992-93	Probe		X
1992-94	Tempo/Topaz		X
1992-97	Thunderbird/Cougar		X
1995-97	Contour/Mystique	X	X
1997-98	Expedition	X	
1997	Mountaineer	X	
1998	Navigator	X	
1998	Windstar	X	

The A/C System Disodorizer(R) can be applied using the Rotunda A/C Disodorizer(R) Sprayer 164-R4700. The disodorizer must be applied through the blower motor or the blower motor resistor/controller opening for proper coverage. Refer to the Disodorizer(R) Application Location Chart to determine which component to remove.

NOTE:

SPRAYER MUST BE CHARGED COMPLETELY FOR PROPER ATOMIZATION OF THE DISODORIZER(R). FAILURE TO PROPERLY APPLY THE DISODORIZER(R) AS OUTLINED IN THIS TSB ARTICLE WILL NOT ALLOW ALL OF THE MICROBIAL GROWTH TO BE CONTAINED AND WILL RESULT IN AN INCOMPLETE REPAIR.

1. Open vehicle windows.

2. Disconnect A/C cycling switch electrical connector.

3. Set the following:

- ^ A/C in vent or panel mode
- ^ Temperature at full heat
- ^ Blower at high speed
- ^ Engine running at normal operating temperature
- ^ Vehicles equipped with a manually operated fresh air/recirculate air door, set the door to fresh air position

4. Run at Step 1.3 conditions for 15 minutes (this Step will dry out the system).

5. Turn ignition off.

CAUTION:
BLOWER MOTOR RESISTOR MAY BE VERY HOT.

6. Remove and disconnect blower motor or resistor/controller (refer to Disodorizer(R) Application Location Chart) by referring to the appropriate Service Manual, Section 12 or Workshop Manual, Section 412-02.

7. Insert the A/C Disodorizer(R) Sprayer (Rotunda 164-R4700) nozzle into the blower motor resistor/control opening in the evaporator case and direct toward the face of the evaporator core. Spray the Disodorizer(R) until empty.

8. Wait 10 minutes before proceeding.

9. Reinstall and reconnect blower motor or resistor/control.

10. Repeat Steps 1-5.

11. Reconnect A/C cycling switch.

12. Allow vehicle to sit for 30 minutes before returning to customer.

PART NUMBER	PART NAME
F6AZ-19G210-AA	A/C System Disodorizer(R)

NOTE:
REFER TO APPROPRIATE SERVICE LABOR TIME STANDARDS MANUAL FOR BLOWER MOTOR REMOVAL AND INSTALLATION OR RESISTOR REMOVAL AND INSTALLATION.

Technical Service Bulletin # **98-12-5** Date: **980622**

A/C - Filtering Refrigerant After Compressor Replacement

Article No.
98-12-5

06/22/98

AIR CONDITIONING - FILTERING REFRIGERANT

AFTER A/C COMPRESSOR REPLACEMENT -
SERVICE TIPS

FORD:
1980-98 CROWN VICTORIA
1981-98 ESCORT
1982-83 FAIRMONT
1982-88 EXP
1982-97 THUNDERBIRD
1982-98 MUSTANG
1983-86 LTD
1984-94 TEMPO
1986-98 TAURUS
1988-93 FESTIVA
1989-97 PROBE
1994-98 ASPIRE
1995-98 CONTOUR

LINCOLN-MERCURY:
1980-98 GRAND MARQUIS, TOWN CAR
1982-83 ZEPHYR
1982-86 CAPRI
1982-87 LN7

1993 Ford Probe L4-121 2.0L DOHC VIN A MFI

1982-97 COUGAR
1982-98 CONTINENTAL
1983-86 MARQUIS
1984-92 MARK VII
1984-94 TOPAZ
1986-98 SABLE
1991-94 CAPRI
1991-98 TRACER
1993-98 MARK VIII
1995-98-MYSTIQUE
1999 COUGAR

LIGHT TRUCK:
1980-96 BRONCO
1980-97 F SUPER DUTY
1980-98 ECONOLINE, F-150, F-150, F-350
1983-98 RANGER
1984-90 BRONCO II
1986-97 AEROSTAR
1988-97 F-47
1991-98 EXPLORER
1993-98 VILLAGER
1995-98 WINDSTAR
1997-98 EXPEDITION, MOUNTAINEER
1999 SUPER DUTY F SERIES

This TSB article is being republished in its entirety to revise the Service Procedure and to update the model years.

ISSUE
Vehicles that have and inoperative A/C compressor, due to internal causes, MUST have the refrigerant system cleaned to remove any debris or contaminants that may be present to prevent damage to the replacement compressor.

ACTION
Install a Service Filter Kit in the refrigerant system prior to installing the replacement compressor. Refer to the following Service Procedure for details.

OTHER APPLICABLE ARTICLES: NONE

SUPERSEDES: 96-15-5

WARRANTY STATUS: Eligible Under The Provisions Of Bumper To Bumper Warranty Coverage For 1992-99 Models And 1991 Lincolns, Basic Warranty Coverage For All Other Models And Major Component Warranty Coverage For All Other Lincoins

OPERATION	DESCRIPTION	TIME
981205A	Kit Installation	1.2 Hrs.
981205B	Extra Time For Refrigerant (R-12) Recovery	0.4 Hr.

DEALER CODING

BASIC PART NO.	CONDITION CODE
19703	49

OASIS CODES: 208000, 208999

Service Procedure

THIS PROCEDURE IS OPTIONAL IF THE SYSTEM IS FLUSHED USING THE ROTUNDA A/C FLUSHER.

CAUTION

THIS FILTERING PROCEDURE MAY BE USED FOR EITHER R-12 OR R-134a REFRIGERANT SYSTEMS. BECAUSE THE TWO (2) SYSTEMS USE DIFFERENT REFRIGERANT OILS AND BECAUSE THE COMPRESSOR COULD BE DAMAGED IF THE WRONG OIL IS USED, SYSTEM IDENTIFICATION IS VERY IMPORTANT. BE SURE SYSTEM IS CORRECTLY IDENTIFIED BEFORE STARTING THE FILTERING PROCEDURE.

Each Service Filter Kit includes the following items:

^ One (1) Pancake Filter (to be installed in the liquid line between the condenser and the orifice tube)

^ One (1) Instruction Sheet

NOTE

ON 1993-94 RANGER/EXPLORER VEHICLES, TECHNICIANS MAY EXPERIENCE DIFFICULTY WHEN CONNECTING THE PANCAKE FILTER HOSE FITTINGS TO THE EVAPORATOR INLET WITH THE ORIFICE TUBE INSTALLED. REMOVE THE OFFICE TUBE AND RUN THE SYSTEM FOR 1 HOUR AS DESCRIBED IN THE FILTERING PROCEDURE. REINSTALL THE ORIFICE TUBE AFTER FILTERING IS COMPLETE.

CAUTION

FOLLOW ALL REFRIGERANT SYSTEM SAFETY AND SERVICE PRECAUTIONS OUTLINED IN THE APPROPRIATE SERVICE OR WORKSHOP MANUAL.

1. Before removing any refrigerant system components, recover the refrigerant from the system following the recycling methods outlined In the appropriate Service/Workshop Manual.

2. Remove the suction accumulator/drier assembly and drain the oil into a calibrated container.

3. Install a new suction accumulator/drier and add new refrigerant oil to replace the old oil. The quantity of the new oil to be added is the amount to match that drained from the old accumulator plus 60 mL (2 oz). Refer to the Dealer Master Parts Catalog for the correct suction accumulator/drier part number.

CAUTION

REMEMBER TO USE MOTORCRAFT YN-9-A REFRIGERANT COMPRESSOR OIL WITH R-12 SYSTEMS AND MOTORCRAFT YN-12-C REFRIGERANT COMPRESSOR OIL WITH R-134a SYSTEMS. FAILURE TO USE THE CORRECT REFRIGERANT OIL MAY RESULT IN DAMAGE TO SYSTEM COMPONENTS.

4. Install a new orifice tube. Refer to the Dealer Master Parts Catalog for the correct orifice tube part number. If the orifice tube in the vehicle is located in the liquid line between the condenser and the evaporator, replace the liquid line assembly.

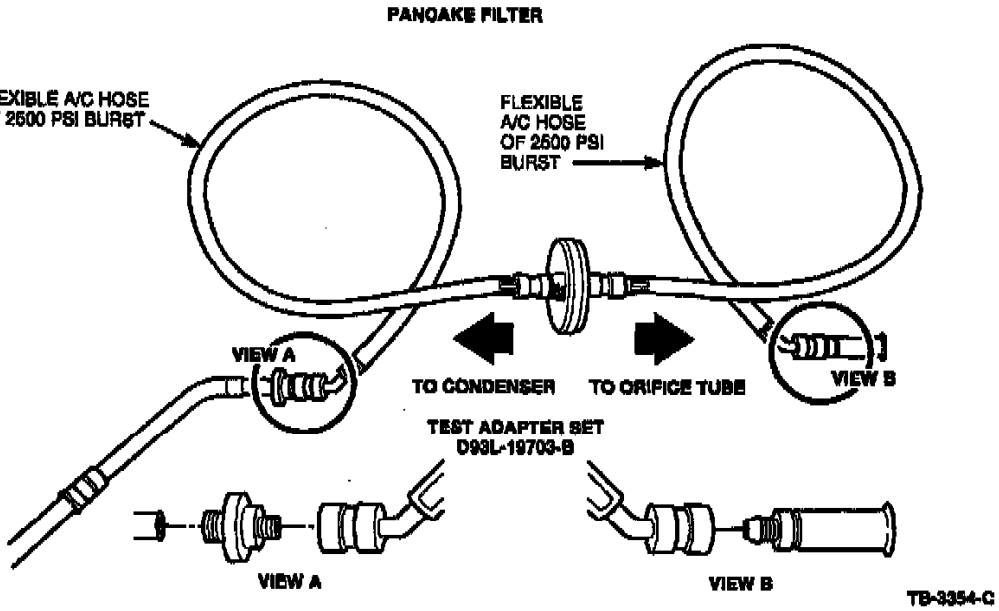

Figure 1

5. Install pancake filter in the liquid line between the condenser and the orifice tube, Figure 1.

   a. Be sure orifice inlet is toward the condenser.

   b. Connections can be made using Test Adapter Set D93L-19703-B, or equivalent, and flexible refrigerant hose of 2500 psi burst rating. Individual fittings are also available.

6. Remove the old compressor following Service/Workshop Manual procedures. Drain the oil into a calibrated container.

7. Drain the oil from the replacement compressor into a clean calibrated container.

NOTE:

IT WILL BE NECESSARY TO TRANSFER THE MAGNET CLUTCH FROM THE OLD COMPRESSOR TO THE REPLACEMENT COMPRESSOR. FOLLOW SERVICE/WORKSHOP MANUAL PROCEDURES.

8. A new FX-15 service compressor contains 207 mL (7 oz.) of R-12 refrigerant oil. A new FS-10 service compressor does not contain any oil and can be used with an R-12 or an R-134a system.

CAUTION
REMEMBER TO USE YN-9-A (MINERAL) OIL WITH R-12 SYSTEMS AND YN-12-C (PAG) OIL WITH R-134a SYSTEMS. FAILURE TO USE THE CORRECT REFRIGERANT OIL MAY RESULT IN DAMAGE TO SYSTEM COMPONENTS.

^ If the amount of oil drained from the removed compressor is between 90 and 148 mL (3-5 oz), pour the same amount of clean refrigerant oil into the new compressor.

^ If the amount of oil drained from the old compressor is greater than 90 mL (3 oz), pour 90 mL (3 oz) of clean refrigerant oil into the new compressor.

9. Install the new compressor following Service/Workshop Manual procedures. Make sure all mounting bolts are tightened properly. Check the tension of the compressor drive belt. Adjust if necessary.

10. Evacuate, charge and leak test the system, following Service/Workshop Manual procedures.

11. Check all refrigerant system hoses, lines and the position of the newly-installed filters to make sure they do not interfere with other engine compartment components. If necessary, use tie straps to make adjustments.

12. Set the A/C control on Max A/C, high blower and temperature control at full cold.

    a. Start engine and let idle briefly.

    b. Be sure A/C system is operating properly.

13. Gradually bring the engine up to 1200 rpm by running it at lower rpms for short periods (first at 800 rpm, then at 1000 rpm). Set the engine at 1200 rpm and run it for an hour with the A/C system operating.

14. Stop the engine.

NOTE:
IT WILL BE NECESSARY TO RECOVER THE SYSTEM REFRIGERANT CHARGE BEFORE PROCEEDING.

15. Allow the engine to cool sufficiently to remove the fittings, flexible hoses and pancake filter from the liquid line.

16. Discard the filter. It can be used one (1) tie only.

17. Reconnect the liquid line back into the system.

18. Evacuate, charge and leak test the system. Make any necessary adjustments.

19. Check the operation of the system in all models.

PART NUMBER	PART NAME
F8VZ-19E773-AA	Filter Kit
F73Z-19577-AA	Refrigerant Oil - Motorcraft YN-9-A (For R-12 Refrigerant Systems Only)
F7AZ-19589-DA	Refrigerant Oil - Motorcraft YN-12-C (PAG-Type Oil For R-134a Refrigerant Systems Only)

NOTE
THE TOTAL REPAIR TIME IS FOR INSTALLING SERVICE FILTER KIT PER INSTRUCTIONS THIS INCLUDES INSTALLATION OF AND DISCARD OF FILTER. REFER TO SERVICE LABOR TIME STANDARDS MANUALS IF ADDITIONAL LABOR OPERATIONS ARE REQUIRED.Technical Service Bulletin # **932314** Date: **931110**

Engine Gasket Surface - Cleaning Procedures

Article No.
93-23-14

11/10/93

ENGINES - GASKET SURFACE CLEANING PROCEDURES

FORD:
1988-93 CROWN VICTORIA, ESCORT, FESTIVA, MUSTANG, TAURUS, TEMPO, THUNDERBIRD
1989-93 PROBE

1993 Ford Probe L4-121 2.0L DOHC VIN A MFI

LINCOLN-MERCURY:
1988-89 TRACER
1988-92 MARK VIII
1988-93 COUGAR, GRAND MARQUIS, SABLE, TOPAZ, TOWN CAR
1991-93 CAPRI, TRACER
1993 MARK VIII

MERKUR:
1988-89 SCORPIO, XR4TI

LIGHT TRUCK:
1988-90 BRONCO II
1988-93 AEROSTAR, BRONCO, ECONOLINE, F SUPER DUTY, F-150-350 SERIES, RANGER
1991-93 EXPLORER
1993 VILLAGER

ISSUE:
Some engine assemblies replaced under warranty have been found to be internally contaminated. This condition may be traceable to a previous repair involving removal of the valve cover(s), intake manifold and cylinder head(s). Scuffed pistons/bores, excessively worn crankshaft/camshaft bearings, low or no oil pressure, engine knocking and excessive oil consumption can result from improper engine gasket surface preparation.

ACTION:
Refer to the following TSB article for gasket sealing surface preparation procedures recommended by Ford Motor Company.

1. Identify the composition of the component part before proceeding with a cleaning operation. Determine whether the part is cast iron, steel, aluminum or plastic. This can usually be distinguished by the inherent hardness and/or weight of the part.

2. If the part is iron or steel, use a scraper with a high carbon blade, for best results. The key is to use a high carbon steel blade that is "razor-sharp." With a sharp blade, very little effort is required to peel off the old gasket.

   a. Lay the blade flat on the surface and push slowly and evenly. Don't allow the blade corners to tip in and mar the surface.

   b. Rounding off the blade corners with a small grinder will prevent scratching and gouging of the gasket surface.

WARNING:
USE EXTREME CARE TO KEEP HANDS AND FINGERS CLEAR OF THE BLADE.

3. If the part is aluminum or plastic, a different scraper must be used. Carbon steel or any other steel edge will cut, mar, gouge or burr aluminum and plastic. A teflon or hard wooden scraper is recommended. First use a commercially-available spray solvent, allowing ample time for the solvent to act on the gasket. A suitable solvent should evaporate and leave no residue behind. Otherwise, the residue can cause a new leak to form.

NOTE:
UNDER NO CIRCUMSTANCES ARE ANY GASKET SURFACES TO BE CLEANED AND PREPARED FOR SEALING BY USING A HAND GRINDER, ROTARY WIRE BRUSH, SANDING DISC OR PAD OR ANY OTHER POWER TOOL USING AN ABRASIVE SURFACE AS A CUTTING TOOL. THESE TOOLS HAVE BEEN FOUND TO PROMOTE ENTRY OF SANDING GRIT AND GASKET MATERIAL INTO ENGINE CAVITIES. THESE TOOLS CAN DAMAGE THE SURFACE FINISH AND POSSIBLY DISTORT THE ORIGINAL FLATNESS OF THE COMPONENT, LEADING TO FURTHER VACUUM, COMPRESSION AND/OR FLUID LEAKS.

4. To prevent gasket material or other foreign matter from entering internal engine compartments, place CLEAN shop towels over exposed cavities. Use extreme care when removing the towels; remove them SLOWLY. Cloth towels can drop as much foreign material into the engine as they originally collected during cleaning operations.

5. Another alternative is to use a portable shop vacuum. Moving a vacuum nozzle closely along with the scraper edge will help direct loosened gasket particles into the vacuum and away from the engine.

6. The same care used in preparing the gasket surface should be practiced when assembling component parts such as the intake manifold and cylinder heads. Both are critical leak areas requiring extra care during assembly. Some things to consider are:

   a. Not all engines use the same sealants in the same places. Some parts use no sealant at all.

   b. Consult the service manual first. Don't assume that a gasket needs sealant. Some gaskets are designed with a pre-cast bead. Adding sealant to this design type will create a leak by shimming the two mating surfaces.

   c. Although some aftermarket gaskets look the same as the ones removed, use only Ford original equipment parts to ensure that the customer receives consistent quality and value.

   d. Avoid gasket locating products such as "tack'ems". These chemicals may leave residues in the engine that are incompatible with the oil, and may even cause damage to the catalytic converter.

7. Practice CLEANLINESS when reinstalling components and gaskets.

   a. A small leak path can become a larger one as fluid erodes a gasket.

   b. Keep dirt, lint and unwanted chemicals off new gaskets.

   c. DO NOT assume that once dirt enters the engine that the oil filter will cleanse the oil to its original state and protect the engine from harmful abrasives. Particles such as silica (sand) are small enough to pass through even the best oil filters. The grinding effect of sand and dirt in oil on internal bearing or wear surfaces is comparable to the effect of valve compound for lapping-in valves.

8. Torque sequence of components such as intake manifold and cylinder heads is extremely critical for proper sealing.

   a. Not only does sequencing make a more effective seal, it also protects the part from warpage or distortions caused by improper tightening. Aluminum is particularly susceptible to warpage from uneven tightening of fasteners.

   b. In some instances, fasteners used on aluminum components must be loosened in sequence. Consult the service Manual in EVERY instance for correct torque and/or de-torque values and sequences.

9. After a repair job, it is a good practice to use a black light leak test to confirm that the repair was successful. For example, it would be easy to assume that the rear main crankshaft seal was leaking when in fact the intake manifold gasket allowed oil to run down the back of the engine. Consider all the facts which allow fluid to travel outside the engine (fan air blast, road air blast, gravity, or escaping/pressurized fluid spray).

To sum-up, a successful leak repair depends on:
^ Accurate diagnosis of the leak using Ford-recommended test equipment and procedures.

^ Surface preparation and gasket installation using the proper cleaning tools

^ Exercising care and cleanliness during assembly/disassembly of components

^ Use of genuine Ford OEM parts.

OTHER APPLICABLE ARTICLES: NONE
WARRANTY STATUS: INFORMATION ONLY
OASIS CODES: 499000

Technical Service Bulletin # **92252** Date: **921202**

Engine - Repair Tips to Avoid Potential Damage

Article No.
92-25-2

Dec. 2, 1992

^ GENERAL ENGINE REPAIR PRACTICES AND SERVICE TIPS TO AVOID POTENTIAL ENGINE DAMAGE

^ ENGINE - GENERAL ENGINE REPAIR PRACTICES AND SERVICE TIPS

FORD:
1988-93 CROWN VICTORIA, ESCORT, FESTIVA, MUSTANG, TAURUS, TEMPO, THUNDERBIRD
1989-93 PROBE

LINCOLN-MERCURY:
1988-92 MARK VII
1988-93 CONTINENTAL, COUGAR, GRAND MARQUIS, SABLE, TOPAZ, TOWN CAR, TRACER
1991-93 CAPRI
1993 MARK VIII

MERKUR:
1988-89 SCORPIO, XR4TI

LIGHT TRUCK:
1988-90 BRONCO II
1988-93 AEROSTAR, BRONCO, ECONOLINE, F SUPER DUTY, F-150-350 SERIES, RANGER
1991-93 EXPLORER
1993 VILLAGER

ISSUE:
Engines examined under the 6/60 Warranty Program indicate that some engines have been damaged by abrasive grit and debris. Use of abrasive

grinding discs to remove gasket material from the engine sealing surfaces during repair procedures can contribute to engine damage/wear. Airborne debris and abrasive grit from the grinding disc may enter the engine through exposed cavities, causing premature wear and eventual engine damage.

ACTION:
We recommend not using abrasive grinding discs to remove engine gasket material. Use manual gasket scrapers for removing gasket material from the engine sealing surfaces.

CAUTION:
TAKE ADDED CARE TO PREVENT SCRATCHING OR GOUGING ALUMINUM SEALING SURFACES.

OTHER APPLICABLE ARTICLES:
NONE

WARRANTY STATUS:
INFORMATION ONLY

OASIS CODES:
499000

Technical Service Bulletin # **98-24-6** Date: **981207**

Electrical - New Terminal Grease Released For Service

Article No.
98-24-6

12/07/98

ELECTRICAL - NEW TERMINAL GREASE RELEASED
FOR SERVICE

FORD:
1981-99 ESCORT
1983-99 CROWN VICTORIA
1984-88 EXP
1984-94 TEMPO
1985-99 TAURUS
1986-97 PROBE
1988-91 FESTIVA
1993-99 MUSTANG
1994-97 ASPIRE
1995-99 CONTOUR
1996-97 THUNDERBIRD

LINCOLN-MERCURY:
1983-99 CONTINENTAL, GRAND MARQUIS
1984-86 CAPRI
1984-87 LN7
1984-94 TOPAZ
1985-99 SABLE
1988-92 MARK VII
1991-94 CAPRI
1993-98 MARK VIII
1993-99 TRACER
1995-99 MYSTIQUE
1996-97 COUGAR, TOWN CAR
1999 COUGAR

MERKUR:
1985-88 XR4TI
1988 SCORPIO

LIGHT TRUCK:
1981-96 BRONCO
1981-97 F SUPER DUTY, F-250 HD, F-350
1981-99 ECONOLINE, F-150, F-250 LD
1983-99 RANGER
1984-90 BRONCO II
1984-97 AEROSTAR
1991-99 EXPLORER

1993 Ford Probe L4-121 2.0L DOHC VIN A MFI

1993-99 VILLAGER
1995-99 WINDSTAR
1997-99 EXPEDITION, MOUNTAINEER
1998-99 NAVIGATOR
1999 SUPER DUTY F SERIES

MEDIUM/HEAVY TRUCK:
1984-99 F & B SERIES
1988-97 CARGO SERIES
1996-98 AEROMAX, LOUISVILLE

ISSUE
Ford Motor Company has released a new Electrical Grease (F8AZ-19G208-AA) to reduce the possibility of moisture corrosion at the terminals.

ACTION
Add the new grease during electrical connection repair.

CAUTION
ELECTRICAL CONNECTOR GREASE SHOULD NOT BE USED IN HIGH VOLTAGE CONNECTIONS FOR SPARK PLUG AND COIL WIRE APPLICATIONS.

PROPER USES OF THE NEW ELECTRICAL GREASE INCLUDE:

^ Electrical Connectors

^ Battery Connections

^ Light Sockets

^ Starter Terminals

DO NOT USE ON:

^ Spark Plug Wires

^ Coil Wires

^ Spark Plug-to-Coil Connections

^ Low Current Flow Switches (12V Systems less than 0.1 amp)

OTHER APPLICABLE ARTICLES: NONE
WARRANTY STATUS: INFORMATION ONLY
OASIS CODES: 201000, 201100, 201200, 202000, 203000, 203200, 204000, 205000, 601300 Technical Service Bulletin # **01-7-3** Date: **010416**

Fuel Pump - Whine Heard Through Radio Speakers

Article No.
01-7-3

04/16/01

^ FUEL SYSTEM - FUEL PUMP
"WHINING"/"BUZZING" NOISE COMES THROUGH
ENTERTAINMENT OR TWO - WAY RADIO SPEAKER

^ RADIO - ENTERTAINMENT OR TWO - WAY
COMMUNICATION - "WHINING"/"BUZZING" NOISE
IN SPEAKERS CAUSED BY FUEL PUMP

^ NOISE - "WHINING"/"BUZZING" - COMES THROUGH
SPEAKERS OF ENTERTAINMENT OR TWO-WAY
RADIO

FORD:

1990-1994	TEMPO
1990-1997	PROBE, THUNDERBIRD
1990-1999	ESCORT, MUSTANG, TAURUS
1990-2001	CROWN VICTORIA

1993 Ford Probe L4-121 2.0L DOHC VIN A MFI

1997-1999	CONTOUR
2001	TAURUS
1990	BRONCO II
1990-1996	BRONCO
1990-1997	AEROSTAR, F SUPER DUTY, F-250 HD, F-350
1990-1999	F-250 LD
1990-2001	ECONOLINE, F-150, RANGER
1991-2001	EXPLORER
1995-2001	WINDSTAR
1997-2001	EXPEDITION
1999-2001	SUPER DUTY F SERIES
2000-2001	EXCURSION
2001	ESCAPE

LINCOLN:

1990-1992	MARK VII
1990-1999	CONTINENTAL
1990-2001	TOWN CAR
1997-1998	MARK VIII
1998-2001	NAVIGATOR

MERCURY:

1990-1994	TOPAZ
1990-1997	COUGAR
1990-1999	SABLE
1990-2001	GRAND MARQUIS
1991-1999	TRACER
1997-1999	MYSTIQUE
1999	COUGAR
2001	SABLE
1993-2001	VILLAGER
1997-2001	MOUNTAINEER

This TSB article is being republished in its entirety to update the model year vehicles.

ISSUE

A "whining"/"buzzing" noise in the speakers of the entertainment radio or two-way radio on vehicles with an in-tank electric fuel pump may be caused by electrical noise from the fuel pump.

ACTION

Install an electronic noise Radio Frequency Interference (RFI) Filter (F1PZ-18B925-A) on the fuel pump inside the fuel tank. Refer to the following Test Procedure to confirm that the concern exists, then refer to the Service Procedure for repair details.

NOTE

SOME LIGHT TRUCKS REQUIRE ONE (1) RFI FILTER FOR EACH IN-TANK ELECTRIC FUEL PUMP ON MULTI-TANK VEHICLES.

NOTE

THIS TSB DOES NOT INCLUDE TAURUS FLEXIBLE FUEL VEHICLES (FFVS) OR 1999 RANGER 3.0L FFVS.

TEST PROCEDURE

Fuel pump radio noise is relatively constant and changes only slightly with vehicle speed. If the frequency of the noise varies or the noise comes and goes with the vehicle speed, then it is not the fuel pump and this fix will not be effective. The following procedure will help determine if the fuel pump is the cause of the radio noise:

1. Turn on the radio before the key is turned on (assuming the radio will operate without the ignition key - you may need to put the ignition key in the Accessory position).

2. Turn the ignition key to the Run position (do not start the engine).

3. The fuel pump should run for about 1 second with the key in the Run position with the engine not running. Listen for noise in the radio. If noise is present while the pump is running and stops when the pump stops, then the noise is being generated by the pump and this procedure should help.

SERVICE PROCEDURE

1. Remove the fuel pump sender assembly from the fuel tank. Refer to the appropriate model year Workshop Manual for removal procedure.

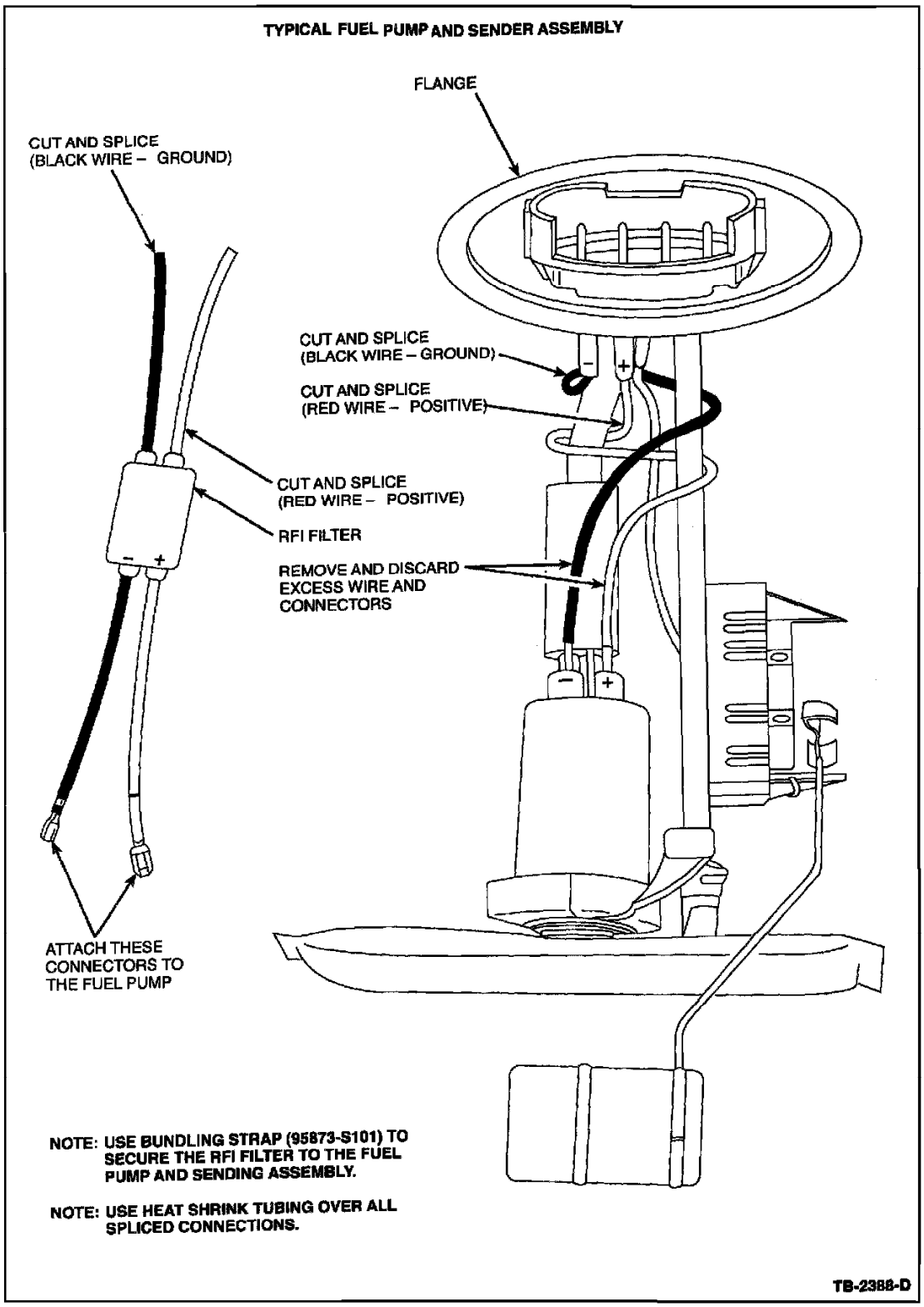

Figure 1

2. On vehicles without a fuel delivery module, remove the negative and positive connectors from the fuel pump, Figure 1.

   a. Cut the wires to the fuel pump 76 mm (3") from the flange of the fuel pump and discard the wires.

   b. Connect the RFI filter connectors to the spade terminal on the fuel pump.

   c. Cut and solder both the red and black wires of the RFI filter to the red and black wires of the flange. Use Heat Shrink Tubing (F5AZ-14A099-M) over the solder connections.

NOTE

HEAT SHRINK TUBING MUST BE USED OVER ALL SOLDERED CONNECTIONS MADE PRIOR TO THIS TSB. USE SUFFICIENT TUBING (ABOUT 50 mm (2",)) OF THE SPECIFIED TYPE TO ENTIRELY COVER EACH SOLDERED CONNECTION AND SHRINK APPROPRIATELY TO PREVENT EXPOSURE OF THE CONNECTIONS.

NOTE

FOR SOME VEHICLES WITH EXTREMELY LONG FUEL PUMP GROUND WIRE CIRCUITS, IT MAY BE NECESSARY TO SHORTEN THE GROUND WIRE TO A POINT CLOSE TO THE FUEL TANK. IF THE GROUND IS MOVED, BE SURE IT IS SECURE AND PROTECTED FROM CORROSION SINCE IT IS THE OPERATING GROUND FOR THE PUMP. CHECK SERVICE LITERATURE (EVTM, ETC.) FOR GROUND LOCATIONS.

WARNING

ALL SOLDERING AND HEAT SHRINKING MUST BE COMPLETED AWAY FROM THE FUEL TANK AREA. USE A SOLDERING IRON ONLY FOR SOLDERING AND HEAT GUN ONLY FOR APPLYING SHRINK TUBING.

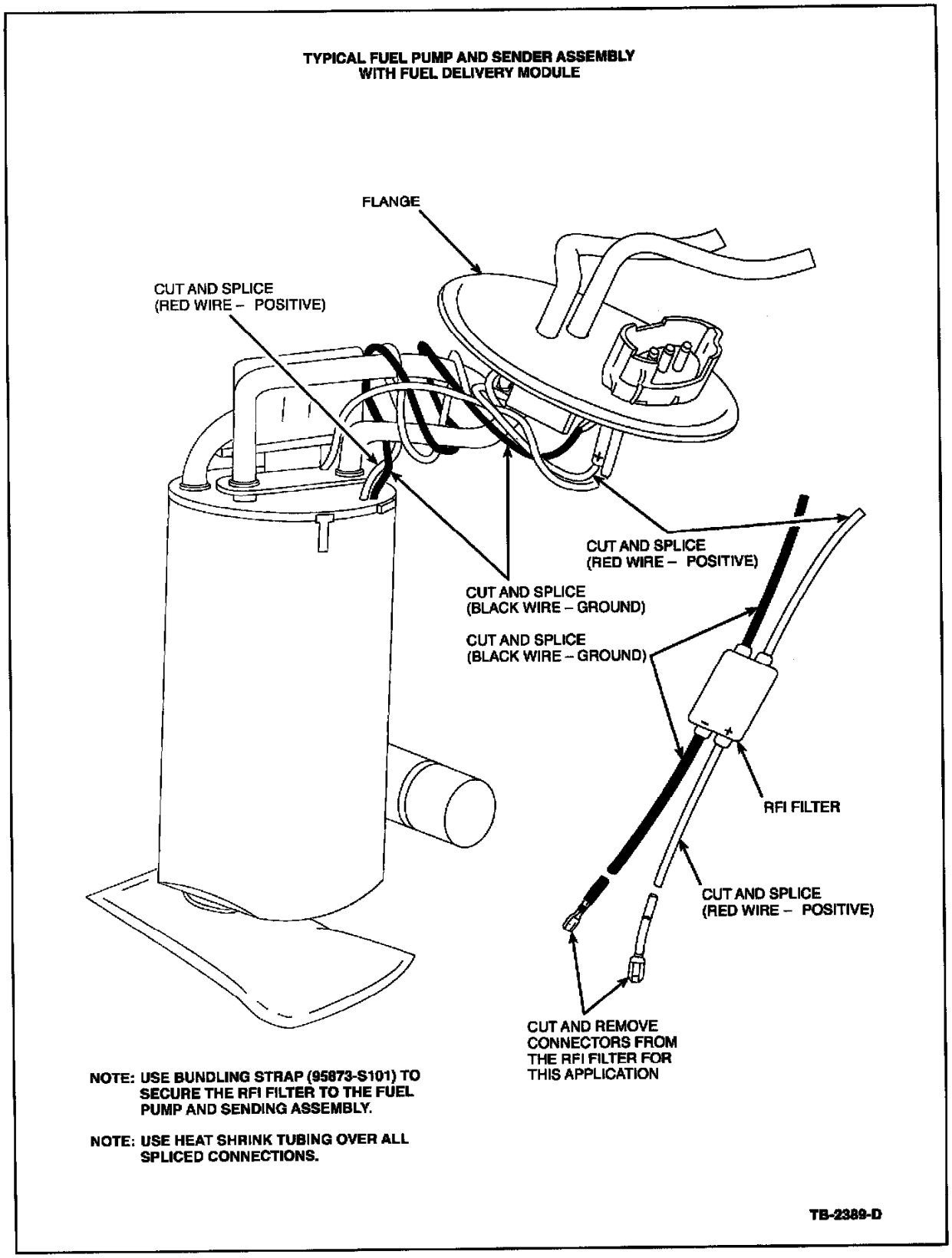

Figure 2

3. On light trucks and compact trucks with a fuel delivery module, cut the fuel pump wires to the fuel delivery module 50 mm (2") from the flange and discard the wires, Figure 2.

   a. Cut the connectors from the RFI filter and solder wires to the fuel delivery module (red to red and black to black). Use heat shrink

tubing over soldering connections.

b. Solder wires from the RFI filter to the flange wires (red to red and black to black). Use heat shrink tubing over soldered connections.

NOTE:
HEAT SHRINK TUBING MUST BE USED OVER ALL SOLDERED CONNECTIONS MADE PRIOR TO THIS TSB. USE SUFFICIENT TUBING (ABOUT 50 mm (2")) OF THE SPECIFIED TYPE TO ENTIRELY COVER EACH SOLDERED CONNECTION AND SHRINK APPROPRIATELY TO PREVENT EXPOSURE OF THE CONNECTIONS.

NOTE:
FOR SOME VEHICLES WITH EXTREMELY LONG FUEL PUMP GROUND WIRE CIRCUITS, IT MAY BE NECESSARY TO SHORTEN THE WIRE TO A POINT CLOSE TO THE FUEL TANK IF THE GROUND IS MOVED, BE SURE IT IS SECURE AND PROTECTED FROM CORROSION. SINCE IT IS THE OPERATING GROUND FOR THE PUMP. CHECK SERVICE LITERATURE (EVTM, ETC.) FOR GROUND LOCATIONS.

WARNING
ALL SOLDERING AND HEAT SHRINKING MUST BE COMPLETED AWAY FROM THE FUEL TANK AREA. USE A SOLDERING IRON ONLY FOR SOLDERING AND HEAT GUN ONLY FOR APPLYING SHRINK TUBING.

4. Secure the RFI filter to the fuel pump and sender assembly with a Bundling Strap (95873-S101) to prevent rattling in the tank, Figures 1 and 2.

5. Reinstall the fuel pump sender assembly into the fuel tank.

CAUTION
INSTALL NEW GASKETS WHEN REINSTALLING SENDER TO PREVENT LEAKS. REFER TO THE PARTS CATALOG FOR PROPER APPLICATIONS.

6. Check the appropriate Electrical and vacuum troubleshooting manual (EVTM) (or other Service Literature) for the location of the fuel pump pump ground. If ground is more than 0.9m (3') from the tank, cut wire and ground fuel pump end within 0.9m (3') of the tank to prevent ground wire from acting as an antenna. Be sure ground is secure and protected from corrosion since it is the operating ground for the fuel pump.

7. Install the fuel tank in the vehicle as outlined in the appropriate Service or Workshop manual.

PART NUMBER	PART NAME
F1PZ-18B925-A	Radio Frequency Interference (RFI) Filter
95873-S101	Bundling Strap
F5AZ-14A099-AA	Heat Shrink Tubing

PARTS BLOCK

OTHER APPLICABLE ARTICLES: 90-18-3, 91-17-5
SUPERSEDES: 99-12-9
WARRANTY STATUS: Eligible Under The Provisions of Bumper To Bumper Warranty Coverage

010703AA	Diagnose And Install RFI Filter (1990-1995 Thunderbird Super Coupe)	2.1 Hrs.
010703AB	Diagnose And Install RFI Filter (1991-1993 Thunderbird/Cougar 5.0L HO)	2.1 Hrs.
010703AC	Diagnose And Install RFI Filter (1994-1997 Thunderbird/Cougar 4.6L MFI)	2.1 Hrs.
010703AD	Diagnose And Install RFI Filter (1990-1997 Thunderbird/Cougar 3.8L)	1.9 Hrs.
010703BA	Diagnose And Install RFI Filter (1990-1995 Taurus/Sable)	1.4 Hrs.
010703BB	Diagnose And Install RFI Filter (1996-1999 Taurus/Sable)	1.4 Hrs.
010703BC	Diagnose And Install RFI Filter (2001 Taurus/Sable)	1.4 Hrs.
010703CA	Diagnose And Install RFI Filter (1992-1997 Crown Victoria/Grand Marquis, Town Car)	1.2 Hrs.

010703CB	Diagnose And Install RFI Filter (1990-1991 Crown Victoria/Grand Marquis, Town Car)	1.6 Hrs.
010703CC	Diagnose And Install RFI Filter (1998-2001 Town Car)	1.9 Hrs.
010703CD	Diagnose And Install RFI Filter (1998-2001 Crown Victoria/Grand Marquis)	2.2 Hrs.
010703DA	Diagnose And Install RFI Filter (1990-1999 Mustang)	1.7 Hrs.
010703EA	Diagnose And Install RFI Filter (1990-1994 Tempo/Topaz)	1.6 Hrs.
010703FA	Diagnose And Install RFI Filter (1990-1992 Mark VII)	1.5 Hrs.
010703FB	Diagnose And Install RFI Filter (1997-1998 Mark VIII LSC)	2.0 Hrs.
010703FC	Diagnose And Install RFI Filter (1997-1998 Mark VIII Base)	2.5 Hrs.
010703GA	Diagnose And Install RFI Filter (1990-1994 Continental)	1.5 Hrs.
010703GB	Diagnose And Install RFI Filter (1995-1999 Continental)	1.5 Hrs.
010703HA	Diagnose And Install RFI Filter (1990 Escort)	1.6 Hrs.
010703HB	Diagnose And Install RFI Filter (1991-1996 Escort/Tracer)	0.8 Hr.
010703HC	Diagnose And Install RFI Filter (1997-1999 Escort/Tracer)	1.6 Hrs.
010703JA	Diagnose And Install RFI Filter (1997 Contour/Mystique)	0.8 Hr.
010703JB	Diagnose And Install RFI Filter (1998-1999 Contour/Mystique)	1.8 Hrs.
010703KA	Diagnose And Install RFI Filter (1990-1992 Probe)	0.8 Hr.
010703KB	Diagnose And Install RFI Filter (1993-1997 Probe)	1.8 Hrs.
010703LB	Diagnose And Install RFI Filter (1990-1991 Econoline - With Dual Tanks (Rear))	1.5 Hrs.
010703LC	Diagnose And Install RFI Filter (1992-2001 Econoline)	1.6 Hrs.
010703LF	Diagnose And Install RFI Filter (1990-1991 Econoline - With Dual Tanks (Front))	1.6 Hrs.
010703LT	Diagnose And Install RFI Filter (1990-1991 Econoline - With Dual Tanks (Both))	2.6 Hrs.
010703L	Diagnose And Install RFI Filter (1990-1991 Econoline - Single Tank)	1.6 Hrs.
010703MA	Diagnose And Install RFI Filter (1990-1996 Bronco)	2.0 Hrs.
010703NA	Diagnose And Install RFI Filter (1991-1994 Explorer)	1.8 Hrs.
010703NB	Diagnose And Install RFI Filter (1995-2001 Explorer)	1.5 Hrs.
010703NC	Diagnose And Install RFI Filter (1997-2001 Mountaineer)	1.5 Hrs.
010703PA	Diagnose And Install RFI Filter (1995-2001 Windstar)	1.4 Hrs.
010703RA	Diagnose And Install RFI Filter (1993-2001 Villager)	1.9 Hrs.
010703SA	Diagnose And Install RFI Filter (1997-2001 Expedition)	1.7 Hrs.
010703SB	Diagnose And Install RFI Filter (1998-2001 Navigator)	1.7 Hrs.
010703TA	Diagnose And Install RFI Filter (1990-1997 Ranger Standard Cab)	1.3 Hrs.
010703TB	Diagnose And Install RFI Filter (1990-1997 Ranger Super Cab)	1.8 Hrs.
010703TC	Diagnose And Install RFI Filter (1998-2001 Ranger 4X2)	1.6 Hrs.
010703TD	Diagnose And Install RFI Filter (1998-2001 Ranger 4X4)	1.8 Hrs.
010703VA	Diagnose And Install RFI Filter (1990-1997 Aerostar)	1.5 Hrs.
010703WA	Diagnose And Install RFI Filter (1990 Bronco II)	1.9 Hrs.
010703XB	Diagnose And Install RFI Filter (1990-1996 F-150/250/350/Super Duty (Rear) And 1997 F-350/Super Duty (Rear))	1.4 Hrs.
010703XC	Diagnose And Install RFI Filter (2000-2001 Excursion)	1.6 Hrs.
010703XF	Diagnose And Install RFI Filter (1990-1996 F-150/250/350/Super Duty (Front) And 1997 F-350/Super Duty (Front))	1.3 Hrs.
010703XL	Diagnose And Install RFI Filter (2001 Escape)	0.8 Hrs.
010703XT	Diagnose And Install RFI Filter (1990-1996 F-150/250/350/Super Duty (Both) And 1997 F-350/Super Duty (Both))	2.1 Hrs.
010703X	Diagnose And Install RFI Filter (1999-2001 Super Duty F-Series)	1.6 Hrs.

OPERATION/DESCRIPTION/TIME

BASIC PART NO.	CONDITION CODE
18B925	42

DEALER CODING

OASIS CODES: 205000, 207000, 404000, 702000, 702300

Technical Service Bulletin # **93B30** Date: **931201**

Overview of Program 93B30

TO: All Ford Dealers December, 1993

SUBJECT:
Owner Notification Program 93B30 - Inspection and, if Necessary, Replacement of Service Fuel Pump Assemblies on Certain 1993 Probe Cars

OASIS - YES
OWNER LIST - YES
PARTS RETURN - NO
PROGRAM TIMING - Through 36/36 bumper-to-bumper warranty or through December 31, 1994, whichever provides greater coverage.

AFFECTED VEHICLES

Approximately 49 1993 Probe cars that had fuel pump assemblies replaced after August 13, 1992.

In addition, if a dealer is aware of a vehicle which received a service replacement fuel pump after August 13, 1992 but is not listed in OASIS, he should contact his district office for approval and submit the 1863 claim under this program to obtain reimbursement.

REASONS FOR THIS PROGRAM
Service replacement fuel pump assemblies, which were built without return line reverse flow check valves, may have been installed in some of these cars. The check valve is designed to prevent fuel leakage from the tank after an incident in which the return line is severed. A missing return line check valve does not affect normal operation of the vehicle.

SERVICE ACTION
To correct this condition, the fuel pump assembly is to be inspected to verify the presence of the check valve. If the check valve is missing, the fuel pump assembly will be replaced.

REFUNDS
Only for owner-paid repairs made before date of Owner Letter.

ATTACHMENTS
Attachment I
- Administrative Information
- Refund Codes

Attachment II
- Labor Allowances
- Parts Ordering Information

Attachment III
- Technical Information

Attachment I - Administrative Information

ATTACHMENT I
B Program

OASIS
YOU MUST USE OASIS TO DETERMINE IF A VEHICLE IS ELIGIBLE FOR THIS PROGRAM.

PLEASE NOTE
CORRECT ALL VEHICLES IN STOCK BEFORE DELIVERY

PROMPTLY CORRECT
- Affected vehicles on the enclosed list.

- Other eligible vehicles which are brought to your dealership.

1993 Ford Probe L4-121 2.0L DOHC VIN A MFI

DEALER-OWNER CONTACT
Immediately contact any owner whose name is not on the list. Give owner a copy of the Owner Letter. Arrange with the owner for a service date.

FCSD CONTACT
Talk with your FCSD Service Zone Manager about program concerns.

FORM 1863
Enter 1863 claims using DWE (or mail direct)

See Warranty and Policy Manual:

- Section 5.6 - 1/Section 6.1 - 24 (Owner Notification Programs)

OWNER REFUNDS

See Warranty and Policy Manual:

- Section 6.1 - Pages 25 through 26 (Owner Refund)

For owner-paid repairs made before date of Owner Letter:

- Submit on separate Form 1863 using the codes shown below:

Program Code Box	-	93B30
Causal Basic Part Number	-	9A407
Condition Code	-	79
Labor Operation (1st line)	-	REFUND
Labor Operation (2nd line)	-	ALLOW
Administrative Allowance	-	0.2 Hrs.
Customer Concern Code	-	N99

Attachment II - Labor and Parts Information

ATTACHMENT II
B Program

LABOR ALLOWANCES	HOURS	LABOR OPERATION
Remove, Inspect and Reinstall Existing Fuel Pump/Sender Assembly.....	1.1 Hrs.	B30A
Remove, Inspect and Install New Fuel Pump and Existing Sender Assy.....	1.1 Hrs.	B30B

(Above times include time to remove tank, drain and refill when necessary)

OWNER NOTIFICATION PROGRAM 93B30
1993 PROBE FUEL PUMP/SENDER ASSEMBLY

PARTS REQUIREMENTS

PART NUMBER	DESCRIPTION	CLASS	DEALER PRICE
F32Z-9A407-A	Fuel Pump Assy. (Contains New O-Ring Seal)	BG	$109.05
E1VZ-9417-B	O-Ring Seal	BG	$1.50

Parts will not be direct shipped for this program. Order your parts requirements through normal order processing channels.

Parts prices current until next issue of Master Price Book. For latest prices, check or call your:

- Order Processing Center
- DOES II
- Updated Price Book

CLAIMS PREPARATIONS

1993 Ford Probe L4-121 2.0L DOHC VIN A MFI

- Use Form 1863
- Enter using DWE (or mail)
- Use code information shown below:

Program Code	- 93B30
Causal Basic Part Number	- 9A407
Condition Code	- 79
Labor Operation	- As appropriate above
Customer Concern Code	- N99

Attachment III - Technical Instructions

ATTACHMENT III
B Program

OWNER NOTIFICATION PROGRAM 93B30
1993 PROBE FUEL PUMP/SENDER ASSEMBLY

TECHNICAL INSTRUCTIONS

1. Remove the fuel pump/sender assembly from the fuel tank. Refer to the Probe Service Manual, Section 10-01, for the procedures.

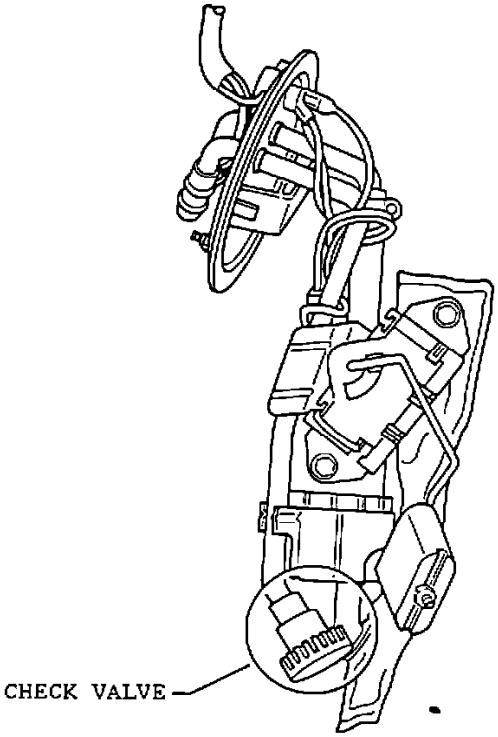

FIGURE 1

2. Inspect the fuel pump for presence of a check valve. See Figure 1.

3. If the check valve is present, the fuel pump is OK. Install a new o-ring seal and reinstall the fuel pump/sender assembly. Release the car.

4. If the check valve is missing, install a new fuel pump assembly.

NOTE:
Remove the fuel pump sender from the old fuel pump and install it on the new pump. Connect the sending unit electrical connector and torque the two retaining screws to 2.3-3.3 N-m (20-30 in.lbs.).

Owner Letter

Serial Number 1FMCA11S6XYZ12345 93B30 December, 1993

Mr. John Sample
123 Main Street
Anywhere, USA 12345

Ford Motor Company is providing a no-charge Service Program, Number 93B30, to owners of certain 1993 Probe cars.

REASON FOR THIS PROGRAM

Service replacement fuel pump assemblies, without return line reverse flow check valves, may have been installed in some of these cars. The check valve is designed to prevent fuel leakage from the tank after an incident in which the return line is severed. A missing check valve does not affect normal operation of the vehicle.

NO COST SERVICE
At no charge to you, your dealer will inspect and, if necessary, install a new fuel pump assembly on your car. This no charge service is available through the 36/36 bumper-to-bumper warranty period, or through December 31, 1994, whichever provides greater coverage.

HOW LONG WILL IT TAKE?
The time needed for this service is about one hour. However, due to service scheduling times, your dealer may need your car for one full working day.

CALL YOUR DEALER
Ask for a service date and if parts are in stock.

If your dealer does not have the parts in stock, they can be ordered before-scheduling your service date. Parts would be expected to arrive within a week.

When you bring your car in, show the dealer this letter.

If you misplace this letter, your dealer will still do the work, free of charge.

REFUNDS
If you paid to have this service done before the date of this letter, Ford is offering a full refund. For the refund, please show your paid work-order to your dealer.

CHANGED ADDRESS OR SOLD THE CAR?
Please fill out the enclosed prepaid postcard and mail it to us if you have changed your address or sold the car.

We are taking this action as part of our ongoing efforts to maintain owner confidence in our products. We hope this program will confirm your continued satisfaction in your Ford built car.

Technical Service Bulletin # **9444** Date: **940223**

Fuel Pump/Bracket Assembly - Obsolete Parts Return

Article No.
94-4-4

02/23/94

^ FUEL PUMP AND BRACKET ASSEMBLY - SERVICE PARTS RETURN OF OBSOLETE PARTS

^ SERVICE PARTS RETURN OF OBSOLETE FUEL PUMP AND BRACKET ASSEMBLY

FORD:
1993-94 PROBE

This TSB article is being republished in its entirety to correct the part number prefix.

ISSUE:
Some fuel pump and bracket assemblies (F32Z-9A407-A) may not have the return fuel line check valve installed.

ACTION:
Remove the obsolete parts from your dealership's inventory. The suspect stock has a build date of 920812A or B and before. The obsolete parts are to be returned to your facing PDC within thirty (30) days of this TSB.

1. Perform 100% sort all dealership stock on hand. Suspect stock has a build date of 920812A or B and before. (92=year; 08=month; 12=day of month; A or B = shift)

NOTE:
BUILD DATE CODE IS PRINTED ON THE LABEL ATTACHED TO THE SUBJECT PART.

2. Okay stock has a build date of 920813A or B and later. These parts can be returned to inventory and released for normal sales.

3. Return suspect stock to your facing PDC using the least expensive transportation.

4. If claim is processed electronically using DOES II, use return code "GB"; otherwise, complete a separate paper claim form FPS-340 using return code "J".

5. In the "Remarks" section, write "Returned Per TSB 94-4-4".

LIMITS

^ The returns must be received within 30 days from the date of this TSB.

^ Returns are restricted to the subject part.

^ The parts must have been purchased from FCSD in accordance with Policy And Procedure Bulletin 4000.

CREDIT
Credit for parts and prepaid freight costs will be issued.

Replacement stock is available for ordering.

PART NUMBER	PART NAME	CLASS
F32Z-9A407-A	Fuel Pump And Bracket Assembly	G

OTHER APPLICABLE ARTICLES: NONE
SUPERSEDES: 94-2-15
WARRANTY STATUS: INFORMATION ONLY
OASIS CODES: 404000

Technical Service Bulletin # **95216** Date: **951023**

Fuel Gauge - Reads Inaccurately

ARTICLE NO.
95-21-6

10/23/95

GAUGE - FUEL - READS INACCURATELY AFTER REPLACEMENT OF FUEL PUMP OR FUEL SENDER

FORD:
1993-95 PROBE

ISSUE:
The fuel gauge may either not reach full or not reach empty after the replacement of the fuel pump or fuel pump sender. This may be caused by a mismatch of the service replacement pumps with fuel senders.

ACTION:

APPLICATION CHART		
Vehicle Build Date	Part Description	Part Number
4/16/92 to 11/18/94	Fuel Pump	F32Z-9A407-A
4/16/92 to 11/18/94	Fuel Sender	F32Z-9275-C

APPLICATION CHART		
Vehicle Build Date	Part Description	Part Number
After 12/19/94	Fuel Pump	F52Z-9350-AA
After 12/19/94	Fuel Sender	F42Z-9275-A

Refer to the Application Charts to be absolutely sure the correct parts are installed based on vehicle build dates

APPLICATION CHART		
Vehicle Build Date	Part Description	Part Number
11/19/94 to 12/19/94	Fuel Pump	F52Z-9350-AA
11/19/94 to 12/19/94	Fuel Sender	F42Z-9275-A

Note
THE ILLUSTRATED VEHICLES MUST HAVE THE FUEL PUMP AND FUEL SENDER REPLACED TOGETHER.

OTHER APPLICABLE ARTICLES: NONE
WARRANTY STATUS: INFORMATION ONLY
OASIS CODES: 204200, 206000

Technical Service Bulletin # **95B70** Date: **951001**

Campaign - Fuel Pump/Sender Modification

95B70

OWNER NOTIFICATION PROGRAM

Fuel Pump/Sender Electrical Circuit Modification on Certain 1989 through 1995 Probe Cars

Dealer Letter

Attachment I
^ Administrative Information

Attachment II
^ Parts Ordering Information

Attachment III-A
^ Technical Instructions - 1989-1992 Non-Turbo Probe

Attachment III-B
^ Technical Instructions - 1993-1995 Probe

Customer Notification Letter

Attachment I - Administrative Information

OASIS
You must use OASIS to determine if a vehicle is eligible for this program.

Please Note
Correct all vehicles in stock before delivery.

Promptly Correct
Affected vehicles on the enclosed list.
Other eligible vehicles which are brought to your dealership.

FCSD Contact
Talk with your FCSD Parts and Service Zone Manager about program concerns.

Claims
Enter claims using DWE. See ACESII Manual, Section 5 & 6.

Owner Refunds
See ACESII Manual, Section 3-55 for submission procedures.

For owner-paid repairs made before date of the Owner Letter (or after the date of the Owner Letter if an emergency repair was made away from the selling dealer), enter using DWE.

Program Code Field - 95B70

Misc. Expense Field - REFUND

Misc. Expense Field - ADMIN

Misc. Expense Field - 0.2 Hrs.

Attachment II - Labor and Parts Information

Labor Allowances

OPERATION DESCRIPTION	HOURS	LABOR OPERATION
Install Fused Jumper Harness 1989 through 1992-Model Years - Kit "AA"	0.4 Hrs.	B70B
Install Fused Jumper Harness 1993 through 1995-Model Years - Kit "BB"	0.6 Hrs.	B70C

Parts Requirements
Parts will not be direct shipped for this program. Order your parts requirements through normal order processing channels.

1993 Ford Probe L4-121 2.0L DOHC VIN A MFI

PART NUMBER	KIT CODE	DESCRIPTION	DEALER PRICE
F4CZ-14406-A	Kit "AA"	Kit, Fuel/Pump Circuit	$16.45
F52Z-14408-AA	Kit "BB"	Harness, Fuel/Pump Circuit	$11.64

Parts prices current until next issue of Master Price Book. For latest prices, check or call your:

^ Order Processing Center
^ DOES II
^ Updated Price Book

Excess Stock Return
Excess stock returned for credit must have been purchased from Ford Parts and Service Division in accordance with Policy Procedure Bulletin 4000.

Claims Preparation
Enter using DWE.
Use code information shown below:

Program Code - 95B70

Labor Operation - See Above

See Section 5 & 6 of the ACESII manual for detailed instruction.

Attachment III-A - Tech. Instruct- 1989-92 Non-Turbo Probe

Fuel Pump/Sender Jumper Wire Modification Instructions

SERVICE PART NUMBER F4CZ-14406-A KIT CONTENTS

ENGINEERING PART NUMBER	DESCRIPTION	QUANTITY
	Jumper Harness	1
	Tie Strap	1
I.S. 8156	Instruction Sheet	1

Affected Vehicles:
1989/90/91/92 Non-Turbo engine equipped Probes.

Technical Instructions

1. Open doors. Connect Rotunda Memory Saver 014-R1064 to retain memory in radio settings, engine learn strategies, etc.

2. Open hood and disconnect battery negative cable.

3. Position both front seats forward.

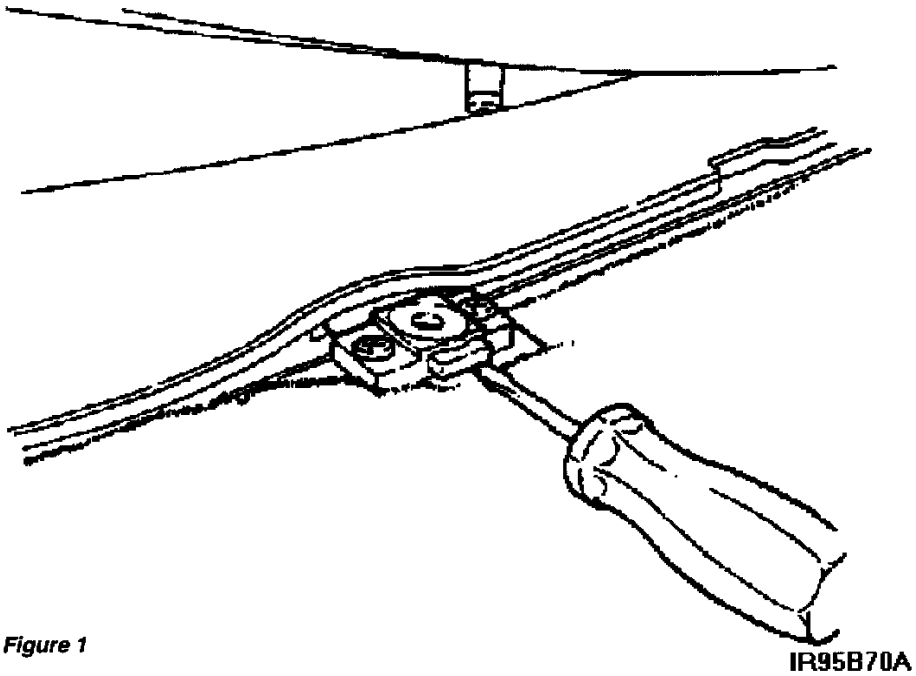

Figure 1

4. Using a screwdriver, disengage rear seat latches and remove rear seat cushion and pad from vehicle. See Figure 1.

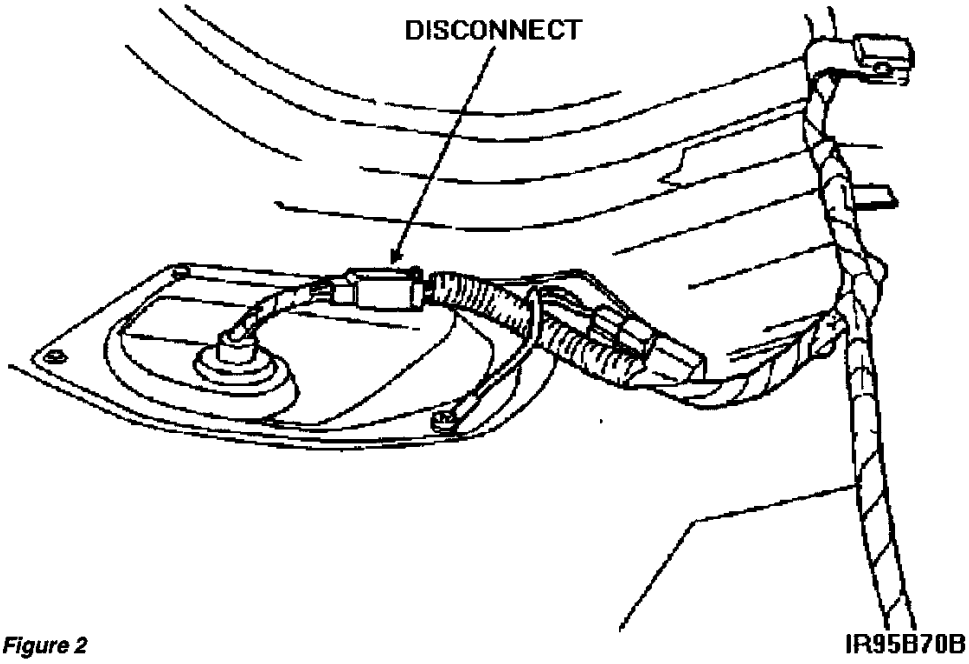

Figure 2

5. Disconnect fuel pump electrical connector. See Figure 2.

6. Connect jumper harness F4CA-14406-A to fuel pump connector and to vehicle wiring harness.

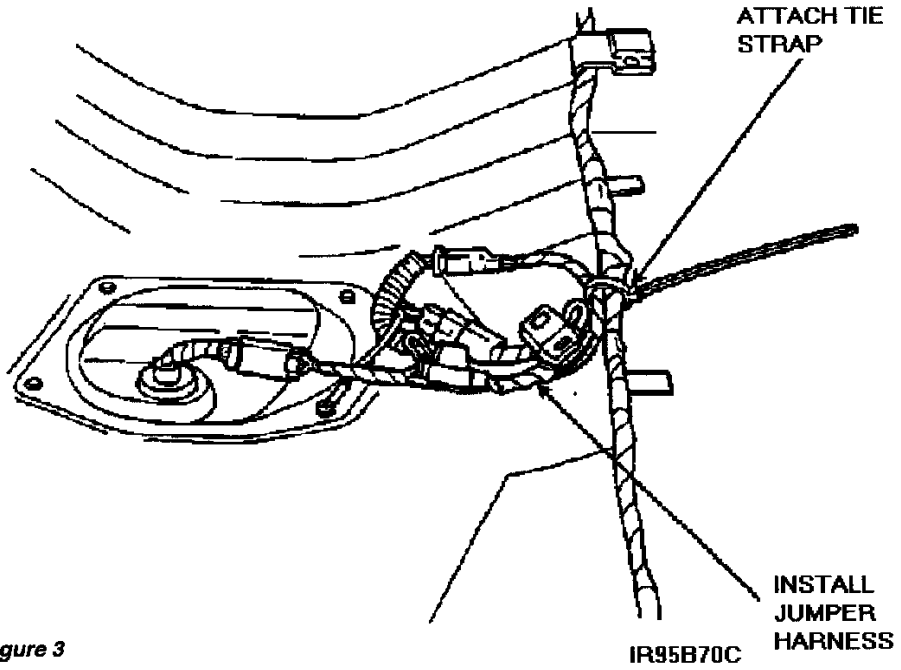

Figure 3

7. Coil and tie-strap the jumper harness to the vehicle wiring harness. See Figure 3.

8. Install pad and rear seat cushion. Ensure latches are properly engaged.

9. Connect battery negative cable and close hood.

10. Disconnect Rotunda Memory Saver.

11. Verify engine operation.

Attachment III-B - Technical Instructions - 1993-95 Probe

Fuel Pump/Sender Jumper Wire Modification Instructions

ORDER PARTS AS REQUIRED

ENGINEERING PART NUMBER	DESCRIPTION	QUANTITY
F52Z-14408-AA	Jumper Harness	1
95874-S	Tie Strap	1

Affected Vehicles:
All 1993, 1994 and 1995 Probe built through April 14, 1995

Technical Instructions

1. Connect Rotunda Memory Saver 014-R1064 to retain memory in radio settings, engine learn strategies, etc.

2. Open hood and disconnect battery negative cable.

3. Open liftgate. Fold rear seat back forward.

4. Remove cargo net and package tray, if equipped.

5. Remove cargo net fasteners, if equipped, or the two (2) upper screws holding the luggage compartment rear cover.

6. Unscrew the two (2) lower luggage compartment rear cover fasteners.

7. Remove the two (2) push pins on either side of the luggage compartment rear cover, then remove cover from vehicle.

8. Remove five (5) pushpins from around left luggage compartment side cover.

9. Remove seat belt trim and remove concealed pushpin.

10. Remove two (2) screws from luggage compartment side cover.

11. Carefully pull side cover away from body to disengage clips, disconnect compartment lamp and remove cover from vehicle.

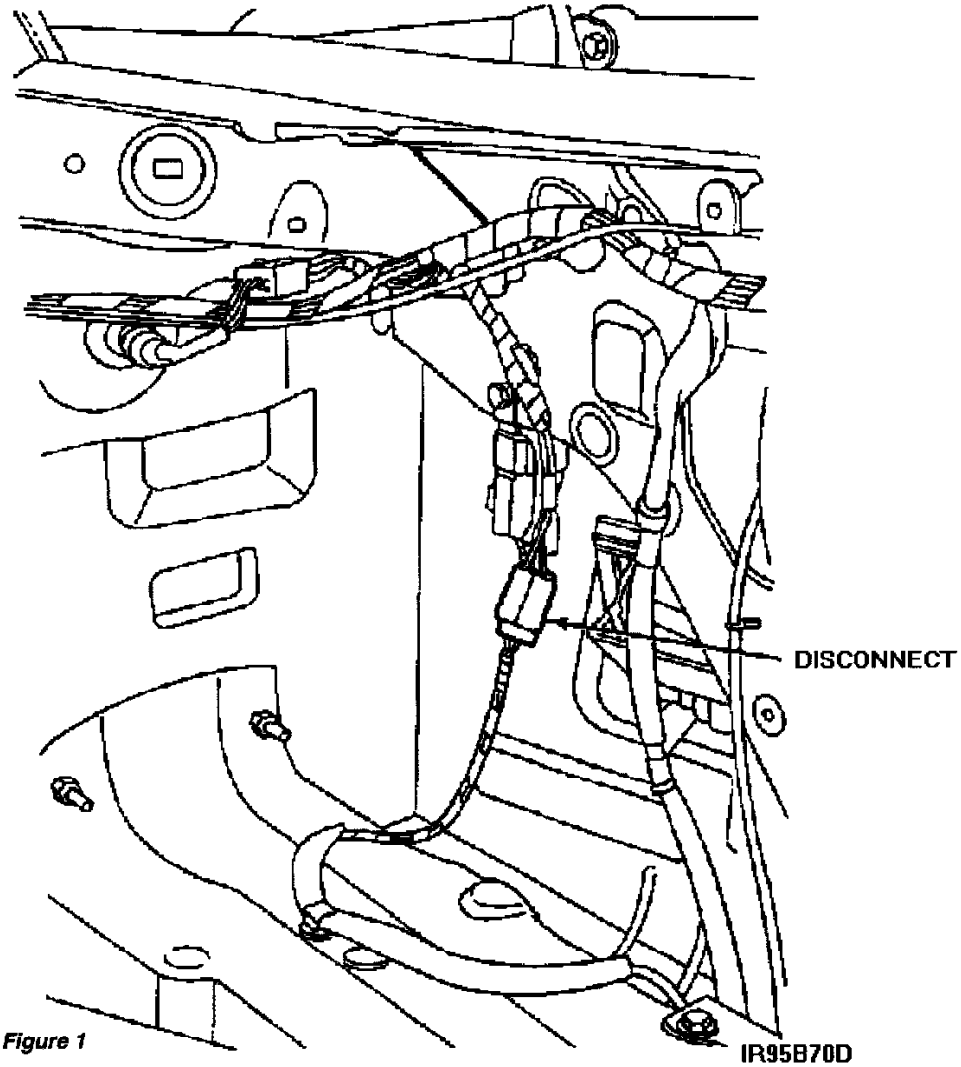

Figure 1

12. Disconnect fuel pump electrical connector. See Figure 1.

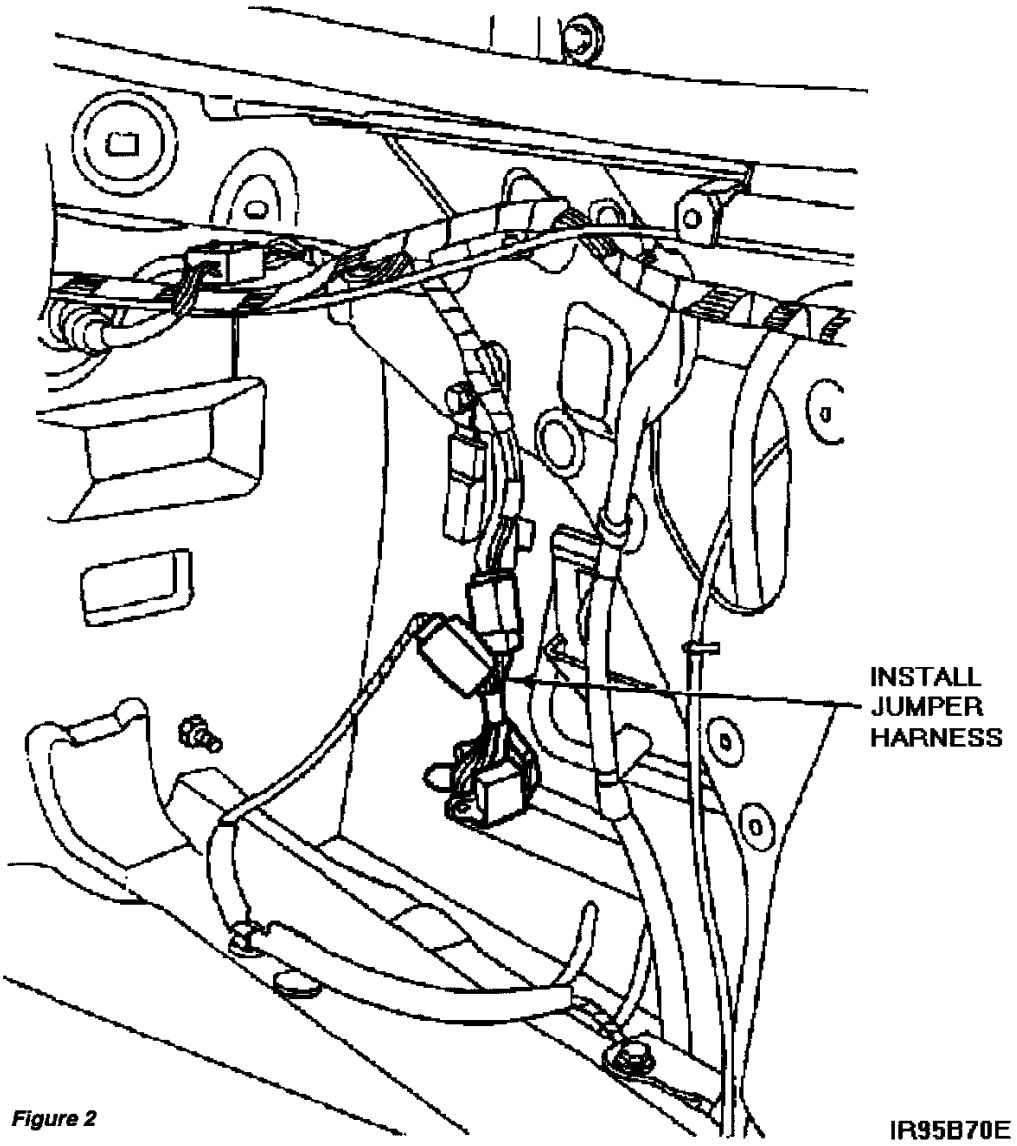

Figure 2

13. Install jumper harness, connecting it to the fuel pump and the free end to the vehicle harness. See Figure 2.

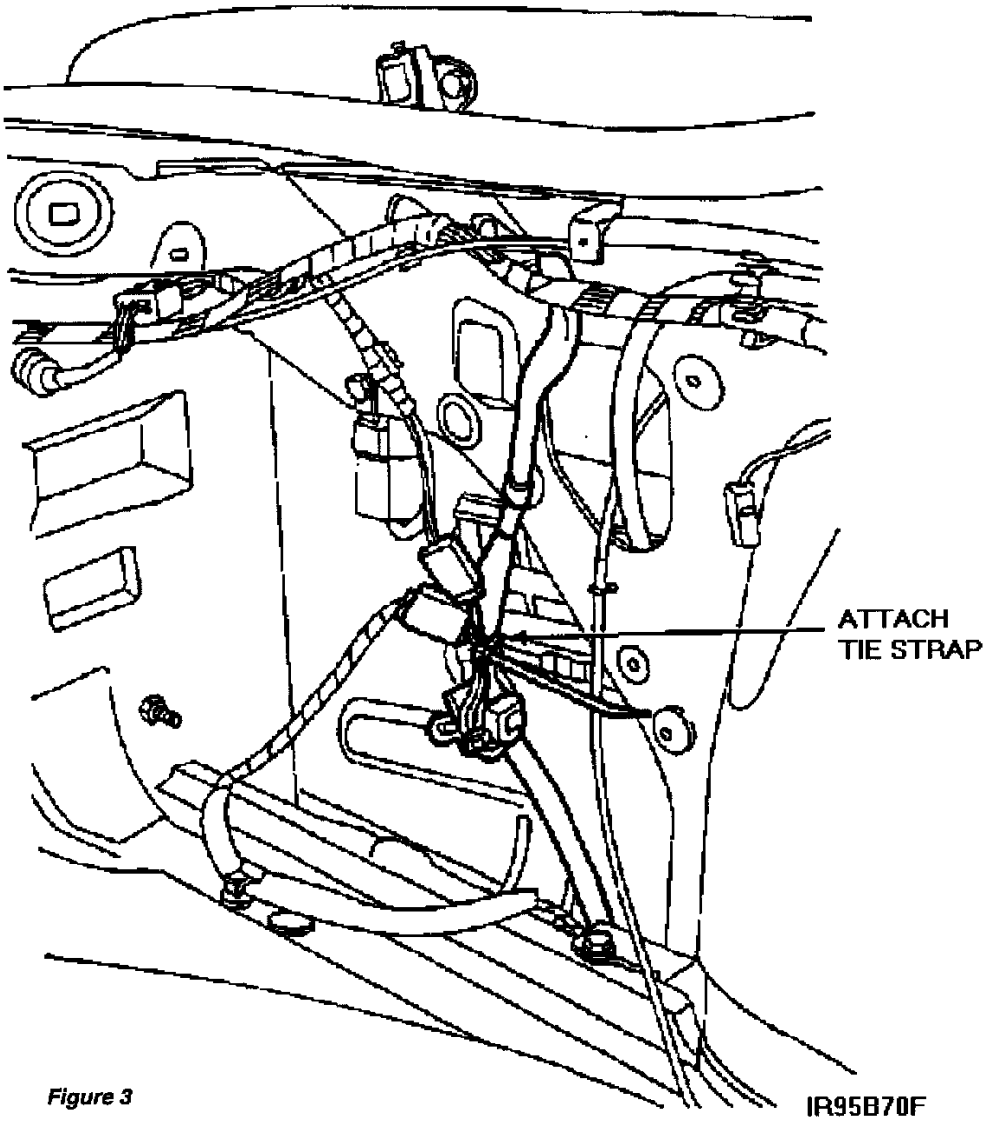

Figure 3

14. Secure jumper harness using supplied plastic tie strap. See Figure 3.

15. Install luggage compartment side cover by first connecting compartment lamp then snapping cover in place.

16. Install two (2) screws, six (6) pushpins and seat belt trim.

17. Position luggage compartment rear cover and secure using removed fasteners and pushpins.

18. Install package tray and cargo net, if equipped.

19. Connect battery negative cable, close hood then remove Memory Saver.

20. Start vehicle to verify proper fuel pump function.

Dealer Letter

To:
All Ford and Lincoln-Mercury Dealers

Subject:
Owner Notification program 95B70 - Fuel Pump/Sender Electrical Circuit Modification on Certain 1989 through 1995-Model Year Probe Cars

OASIS
YES

Owner List
YES

Parts Return
NO

1993 Ford Probe L4-121 2.0L DOHC VIN A MFI

Program Terms
There are no time/mileage limitations for this program

Affected Vehicles
1989 through 1995-model year Probe cars equipped with non-turbo charged 2.0L, 2.2L, 2.5L and 3.0L engines that were originally sold or are currently registered in Connecticut, Illinois, Indiana, Maine, Massachusetts, Michigan, New Hampshire, New York, New Jersey, Ohio, Pennsylvania, Rhode Island, Vermont and Wisconsin.

Reason For This Program
Salt water intrusion between the fuel pump/sender wiring harness connector and fuel pump/sender flange may cause electrolytic corrosion resulting in an electrical short circuit. The corrosion is the result of heavy use of calcium and sodium chloride salts for road dust and ice control in the above noted states. Should a short circuit occur, the instrument cluster gauges may act erratically, the driver may see or smell smoke inside the passenger compartment due to the wiring overheating and the fuel pump may stop operating.

Service Action
Owners of affected cars will be asked to return their cars to their dealer for installation of a fuel jumper harness in the fuel pump/sender electrical circuit. Should a short circuit occur after the jumper is installed, the jumper harness fuse for the fuel gauge will open preventing a stalled vehicle and overheating damage to the wiring harness while causing the fuel gauge to peg past full. If the driver should continue to operate the vehicle for a long period of time with an open gauge fuse, eventually the jumper harness fuse for the fuel pump will open causing the fuel pump to stop operating.

If an owner whose vehicle is not listed in OASIS believes his/her vehicle should have been included, or this condition is observed in a vehicle not covered by this action, dealers are to contact their regional office for approval and submit the claim under this program for reimbursement.

Refunds
Only for owner-paid repairs made before the date of the Owner Letter (or after the date of the Owner Letter if an emergency repair was made away from the selling dealer).

Questions?
Claims Information 1-800-423-8851
Other Recall Questions 1-800-325-5621

Attachments

Attachment I
^ Administrative Information

Attachment II
^ Labor Allowances
^ Parts Ordering Information

Attachment III-A
^ Technical Information - Kit AA

Attachment III-B
^ Technical Information - Kit BB

Owner Letter

Date, 1995

Serial Number: 12345678901234567 95B70

Mr. John Sample
123 Main Street
Anywhere, USA 12345

Ford Motor Company is providing a no-charge Service Program Number 95B70, to owners of certain 1989 through 1995 Probe cars.

Reason For This Program
We wish to install a fused jumper harness in the fuel pump electrical circuit of your car. The fused jumper harness is designed to prevent engine stalling and extensive wiring damage due to a possible fuel pump/sender wiring harness electrical short circuit.

No Charge Service. At no charge to you, your dealer will install a fused jumper harness within the fuel pump/sender electrical circuit of your car. We encourage you to have this service performed on your car as soon as possible.

How Long Will It Take?
The time needed for this service is about one hour. However, due to service scheduling times, your dealer may need your car for one full working day.

Call Your Dealer

1993 Ford Probe L4-121 2.0L DOHC VIN A MFI

Ask for a service date and if parts are in stock for Program Number 95B70.

If your dealer does not have the parts in stock, they can be ordered before scheduling your service date. Parts would be expected to arrive within a week.

When you bring your car in, show the dealer this letter.

If you misplace this letter, your dealer will still do the work, free of charge.

Refunds
If you paid to have this service done before the date of this letter, Ford is offering a full refund. For the refund, please give your paid original receipt to your Ford or Lincoln-Mercury dealer.

Changed Address or Sold the Car?
Please fill out the enclosed prepaid postcard and mail it to us if you have changed your address or sold the car.

We are taking this action as part of our ongoing efforts to maintain owner confidence in our products.

We hope this program will confirm your continued satisfaction in your Ford built car.Technical Service Bulletin # **02-16-4** Date: **020819**

Audio System - Whining/Buzzing Noise From Speakers

Article No.
02-16-4

08/19/02

^ FUEL SYSTEM - FUEL PUMP "WHINING"/"BUZZING" NOISE COMES THROUGH ENTERTAINMENT OR TWO-WAY RADIO SPEAKER

^ RADIO - ENTERTAINMENT OR TWO-WAY COMMUNICATION - "WHINING"/"BUZZING" NOISE IN SPEAKERS CAUSED BY FUEL PUMP

^ NOISE - "WHINING"/"BUZZING" - COMES THROUGH SPEAKERS OF ENTERTAINMENT OR TWO-WAY RADIO

FORD:
1990-1994 TEMPO
1990-1997 ESCORT, PROBE, THUNDERBIRD
1990-1998 MUSTANG
1990-1999 TAURUS
1990-2002 CROWN VICTORIA
1997-1999 CONTOUR
2001 TAURUS
1990 BRONCO II
1990-1996 BRONCO
1990-1997 AEROSTAR, F SUPER DUTY, F-250 HD, F-350
1990-1999 F-250 LD
1990-2002 ECONOLINE, F-150, RANGER
1991-2002 EXPLORER
1995-2002 WINDSTAR
1997-2003 EXPEDITION
1999-2002 SUPER DUTY F SERIES
2000-2002 EXCURSION, EXPLORER SPORT TRAC, EXPLORER SPORT
2001-2002 ESCAPE

LINCOLN:
1990-1992 MARK VII
1990-1994 CONTINENTAL
1990-2002 TOWN CAR
1998-2003 NAVIGATOR
2002 BLACKWOOD

MERCURY:
1990-1994 TOPAZ
1990-1997 COUGAR
1990-1999 SABLE
1990-2002 GRAND MARQUIS
1991-1997 TRACER
1997-1999 MYSTIQUE
2001 SABLE

1993 Ford Probe L4-121 2.0L DOHC VIN A MFI

1993-2002 VILLAGER
1997-2002 MOUNTAINEER

TSB 01-7-3 is being republished in its entirety to update the model year coverage and vehicle line coverage.

ISSUE

A "whining"/"buzzing" noise in the speakers of the entertainment radio or two-way radio on vehicles with an in-tank electric fuel pump may be caused by electrical noise from the fuel pump.

ACTION

Install an electronic noise Radio Frequency Interference (RFI) Filter (F1PZ-18B925-A) on the fuel pump inside the fuel tank. Refer to the following Test Procedure to confirm that the concern exists, then refer to the Service Procedure for repair details.

NOTE
IF THE VEHICLE HAS AN ELECTRONIC RETURNLESS FUEL SYSTEM, DO NOT INSTALL A RFI FILTER INLINE TO THE FUEL PUMP. ONLY VEHICLES WITH MECHANICAL RETURNLESS FUEL SYSTEMS (PRESSURE REGULATOR IN THE TANK), OR SYSTEMS WITH THE PRESSURE REGULATOR ON THE FUEL RAIL SHOULD BE APPROVED FOR THE RFI FILTER INSTALLATION.

NOTE
SOME LIGHT TRUCKS REQUIRE ONE (1) RFI FILTER FOR EACH IN-TANK ELECTRIC FUEL PUMP ON MULTI-TANK VEHICLES.

NOTE
THIS TSB DOES NOT INCLUDE TAURUS FLEXIBLE FUEL VEHICLES (FFVS) OR 1999 RANGER 3.0L FFVS.

TEST PROCEDURE

Fuel pump radio noise is relatively constant and changes only slightly with vehicle speed. If the frequency of the noise varies or the noise comes and goes with the vehicle speed, then it is not the fuel pump and this fix will not be effective. The following procedure will help determine if the fuel pump is the cause of the radio noise:

1. Turn on the radio before the key is turned on (assuming the radio will operate without the ignition key - you may need to put the ignition key in the Accessory position).

2. Turn the ignition key to the Run position (do not start the engine).

3. The fuel pump should run for about 1 second with the key in the Run position with the engine not running. Listen for noise in the radio. If noise is present while the pump is running and stops when the pump stops, then the noise is being generated by the pump and this procedure should help.

PART NUMBER	PART NAME
F1PZ-18B925-A	Radio Frequency Interference (RFI) Filter
95873-S101	Bundling Strap
F5AZ-14A099-AA	Heat Shrink Tubing

Parts Block

OTHER APPLICABLE ARTICLES: NONE

SUPERSEDES: 01-7-3

WARRANTY STATUS: Eligible Under The Provisions Of Bumper To Bumper Warranty Coverage

OPERATION	DESCRIPTION	TIME
021604AA	Diagnose And Install RFI Filter 1990-1997 Thunderbird/Cougar	2.1 Hrs.
021604BA	Diagnose And Install RFI Filter 1990-1999 And 2001 Taurus/Sable	1.4 Hrs.
021604CA	Diagnose And Install RFI Filter 1992-1997 Crown	1.2 Hrs.

	Victoria/Grand Marquis/Town Car	
021604CB	Diagnose And Install RFI Filter 1990-1991 Crown Victoria/Grand Marquis/Town Car	1.6 Hrs.
021604CC	Diagnose And Install RFI Filter 1998-2002 Crown Victoria/Grand Marquis	2.2 Hrs.
021604DA	Diagnose And Install RFI Filter 1998-2002 Town Car	1.9 Hrs.
021604EA	Diagnose And Install RFI Filter 1990-1998 Mustang	1.7 Hrs.
021604FA	Diagnose And Install RFI Filter 1990-1998 Mustang	1.6 Hrs.
021604GA	Diagnose And Install RFI Filter 1990-1994 Continental	1.5 Hrs.
021604HA	Diagnose And Install RFI Filter 1990 Escort	1.6 Hrs.
021604IA	Diagnose And Install RFI Filter 1991-1996 Escort Tracer	0.8 Hr.
021604IB	Diagnose And Install RFI Filter 1997 Escort/Tracer	1.6 Hrs.
021604JA	Diagnose And Install RFI Filter 1997 Contour/Mystique	0.8 Hr.
021604JB	Diagnose And Install RFI Filter 1998-1999 Contour/Mystique	1.8 Hrs.
021604KA	Diagnose And Install RFI Filter 1990-1992 Mark VII	2.0 Hrs.
021604LA	Diagnose And Install RFI Filter 1990-1992 Probe	0.8 Hr.
021604LB	Diagnose And Install RFI Filter 1993-1997 Probe	1.8 Hrs.
021604MA	Diagnose And Install RFI Filter 1990-2002 Econoline Single Fuel Tank	1.6 Hrs.
021604MB	Diagnose And Install RFI Filter 1990-1991 Econoline Both Fuel Tanks	2.6 Hrs.
021604NA	Diagnose And Install RFI Filter 1990-1996 Bronco	2.0 Hrs.
0216040A	Diagnose And Install RFI Filter 1991-1994 Explorer	1.8 Hrs.
0216040B	Diagnose And Install RFI Filter 1995-2002 Explorer	1.5 Hrs.
021604PA	Diagnose And Install RFI	1.5 Hrs.

	Filter 1997-2002 Mountaineer	
0216040A	Diagnose And Install RFI Filter 1995-2002 Windstar	1.4 Hrs.
021604RA	Diagnose And Install RFI Filter 1993-2002 Villager	1.9 Hrs.
021604SA	Diagnose And Install RFI Filter 1997-2003 Expedition/Navigator	1.7 Hrs.
021604TA	Diagnose And Install RFI Filter 1990-1997 Ranger Standard Cab	1.3 Hrs.
021604TB	Diagnose And Install RFI Filter 1990-1997 Ranger Super Cab	1.8 Hrs.
021604TC	Diagnose And Install RFI Filter 1998-2002 Ranger 4X4	1.8 Hrs.
021604TD	Diagnose And Install RFI Filter 1998-2002 Ranger 4X2	1.6 Hrs.
021604UA	Diagnose And Install RFI Filter 1990-1997 Aerostar	1.5 Hrs.
021604VA	Diagnose And Install RFI Filter 1990 Bronco II	1.9 Hrs.
021604WA	Diagnose And Install RFI Filter 1990-1996 F-150/250/350/Super Duty And 1997 F-350/Superduty Rear	1.4 Hrs.
021604WB	Diagnose And Install RFI Filter 1990-1996 F-150/250/350/Super Duty And 1997 F-350/Superduty Front	1.4 Hrs.
021604WC	Diagnose And Install RFI Filter 1990-1996 F-150/250/350/Super Duty And 1997 F-350/Superduty Both Tanks	2.1 Hrs.
021604WD	Diagnose And Install RFI Filter 1998-2002 F-150	1.6 Hrs.
021604XA	Diagnose And Install RFI Filter 2000-2002 Excursion	1.6 Hrs.
021604XB	Diagnose And Install RFI Filter 1999-2002 Super Duty F-Series: Front Tank	1.6 Hrs.
021604XC	Diagnose And Install RFI Filter 1999-2002 Super Duty F-Series: Rear Tank	1.5 Hrs.
021604XD	Diagnose And Install RFI Filter 1999-2002 Super Duty F-Series: Both Tanks	2.7 Hrs.

1993 Ford Probe L4-121 2.0L DOHC VIN A MFI

021604YA	Diagnose And Install RFI Filter 2001-2002 Escape	0.8 Hr.
021604ZA	Diagnose And Install RFI Filter 2002 Blackwood	1.9 Hrs.

DEALER CODING

BASIC PART NO.	CONDITION CODE
18B925	42

OASIS CODES: 205000, 207000, 404000, 702000, 702300

Service Procedure

1. Remove the fuel pump sender assembly from the fuel tank. Refer to the appropriate model year Workshop Manual for removal procedure.

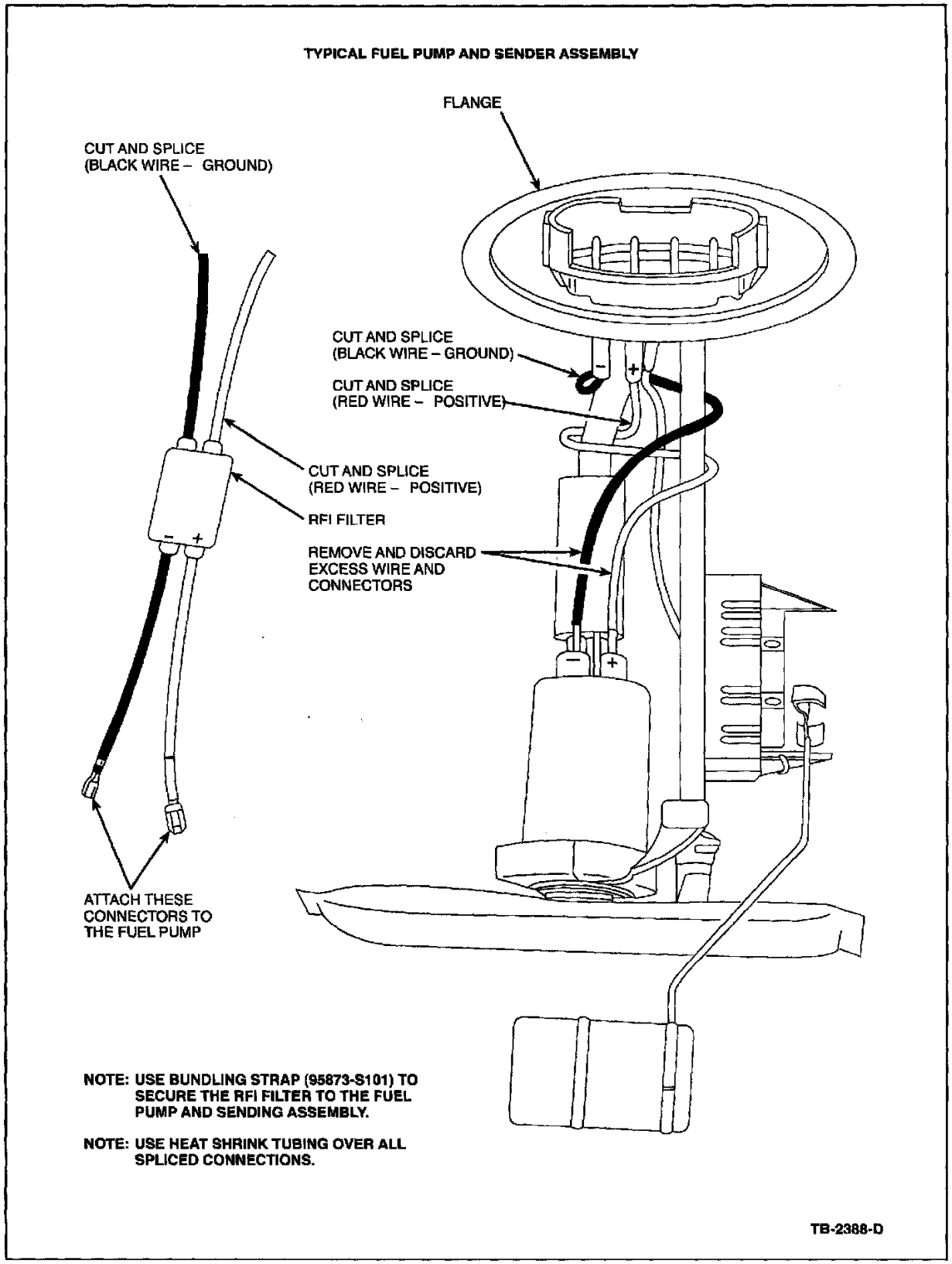

Figure 1

2. On vehicles without a fuel delivery module, remove the negative and positive connectors from the fuel pump, Figure 1.

   a. Cut the wires to the fuel pump 76 mm (3") from the flange of the fuel pump and discard the wires.

   b. Connect the RFI filter connectors to the spade terminal on the fuel pump.

   c. Cut and solder both the red and black wires of the RFI filter to the red and black wires of the flange. Use Heat Shrink Tubing (F5AZ-14A099-AA) over the solder connections.

NOTE

HEAT SHRINK TUBING MUST BE USED OVER ALL SOLDERED CONNECTIONS MADE PER THIS TSB. USE SUFFICIENT TUBING (ABOUT 50 mm (2 ")) OF THE SPECIFIED TYPE TO ENTIRELY COVER EACH SOLDERED CONNECTION AND SHRINK APPROPRIATELY TO PREVENT EXPOSURE OF THE CONNECTIONS.

NOTE

FOR SOME VEHICLES WITH EXTREMELY LONG FUEL PUMP GROUND WIRE CIRCUITS, IT MAY BE NECESSARY TO SHORTEN THE GROUND WIRE TO A POINT CLOSE TO THE FUEL TANK. IF THE GROUND IS MOVED, BE SURE IT IS SECURE AND PROTECTED FROM CORROSION SINCE IT IS THE OPERATING GROUND FOR THE PUMP. CHECK SERVICE LITERATURE (EVTM, ETC.) FOR GROUND LOCATIONS.

WARNING

ALL SOLDERING AND HEAT SHRINKING MUST BE COMPLETED AWAY FROM THE FUEL TANK AREA. USE A SOLDERING IRON ONLY FOR SOLDERING AND HEAT GUN ONLY FOR APPLYING SHRINK TUBING.

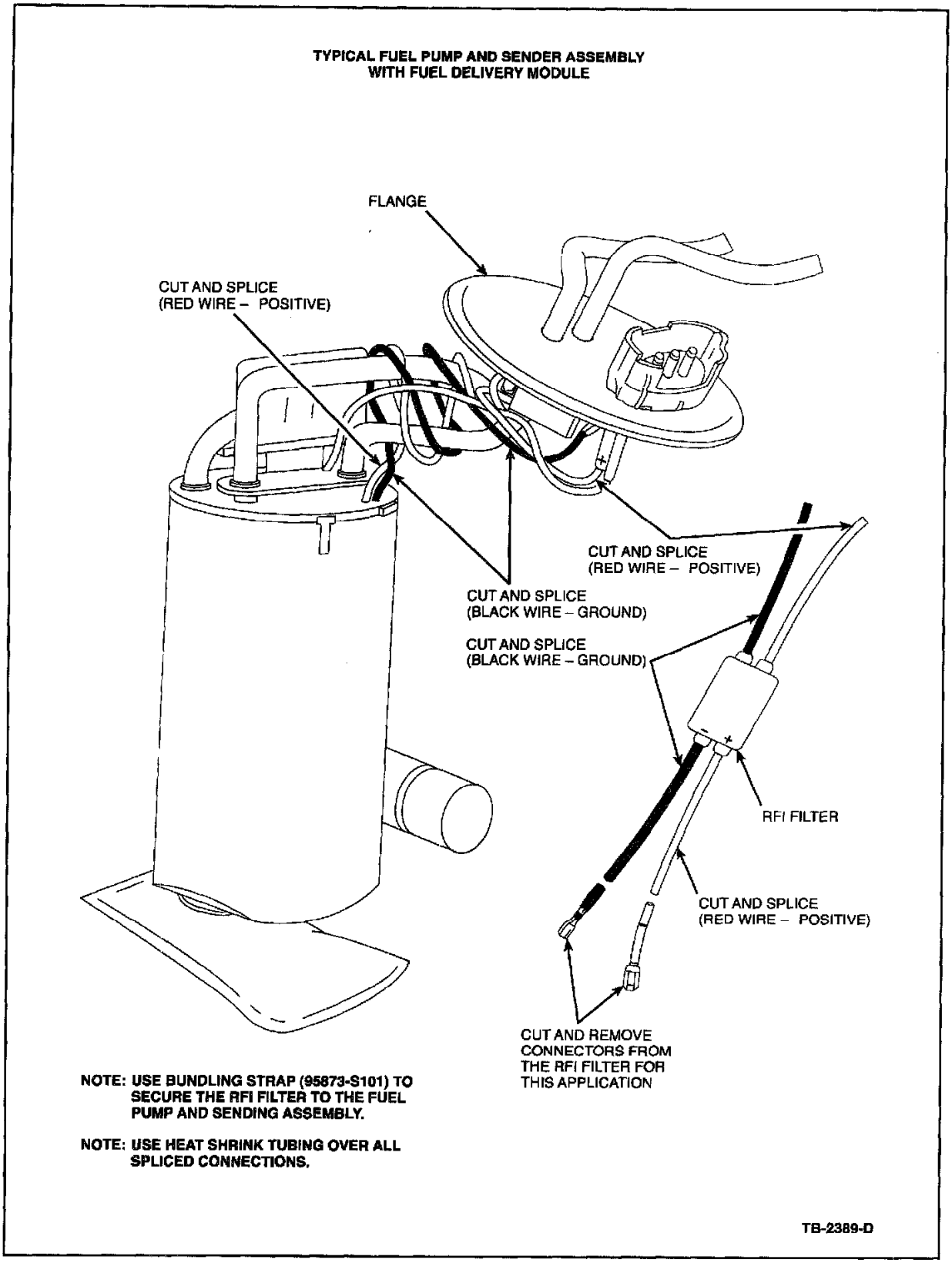

Figure 2

3. On light trucks and compact trucks with a fuel delivery module, cut the fuel pump wires to the fuel delivery module 50 mm (2") from the flange and discard the wires, Figure 2.

a. Cut the connectors from the RFI filter and solder wires to the fuel delivery module (red to red and black to black). Use heat shrink tubing over solder connections.

b. Solder wires from the RFI filter to the flange wires (red to red and black to black). Use heat shrink tubing over soldered connections.

NOTE
HEAT SHRINK TUBING MUST BE USED OVER ALL SOLDERED CONNECTIONS MADE PER THIS TSB. USE SUFFICIENT TUBING (ABOUT 50 mm (2 ")) OF THE SPECIFIED TYPE TO ENTIRELY COVER EACH SOLDERED CONNECTION AND SHRINK APPROPRIATELY TO PREVENT EXPOSURE OF THE CONNECTIONS.

NOTE
FOR SOME VEHICLES WITH EXTREMELY LONG FUEL PUMP GROUND WIRE CIRCUITS, IT MAY BE NECESSARY TO SHORTEN THE GROUND WIRE TO A POINT CLOSE TO THE FUEL TANK. IF THE GROUND IS MOVED, BE SURE IT IS SECURE AND PROTECTED FROM CORROSION SINCE IT IS THE OPERATING GROUND FOR THE PUMP. CHECK SERVICE LITERATURE (EVTM, ETC.) FOR GROUND LOCATIONS.

WARNING
ALL SOLDERING AND HEAT SHRINKING MUST BE COMPLETED AWAY FROM THE FUEL TANK AREA. USE A SOLDERING IRON ONLY FOR SOLDERING AND HEAT GUN ONLY FOR APPLYING SHRINK TUBING.

4. Secure the RFI filter to the fuel pump and sender assembly with a Bundling Strap (95873-S101) to prevent rattling in the tank, Figures 1 and 2.

5. Reinstall the fuel pump sender assembly into the fuel tank.

CAUTION
INSTALL NEW GASKETS WHEN REINSTALLING SENDER TO PREVENT LEAKS. REFER TO THE PARTS CATALOG FOR PROPER APPLICATIONS.

6. Check the appropriate Electrical and Vacuum Troubleshooting Manual (EVTM) (or other service literature) for the location of the fuel pump ground. If ground is more than 0.9m (3 ') from the tank, cut wire and ground fuel pump end within 0.9m (3 ') of the tank to prevent ground wire from acting as an antenna. Be sure ground is secure and protected from corrosion since it is the operating ground for the fuel pump.

7. Install the fuel tank in the vehicle as outlined in the appropriate Service or Workshop Manual.

Technical Service Bulletin # **93235**
Date: **931110**

Front Brakes - Grinding Noise

Article No.
93-23-5

11/10/93

^ BRAKES - FRONT - "GRINDING" NOISE ON MODERATE TO HEAVY BRAKING

^ NOISE - "GRINDING" SOUND FROM FRONT BRAKES DURING MODERATE TO HEAVY BRAKING

FORD:
1993 PROBE

ISSUE:
Front brake grinding noise may be heard on moderate-to-heavy braking. The concern occurs most often at ambient temperatures above 65~ F (18~ C). This condition may be caused by the brake pad material.

ACTION:
Replace the front brake pads with improved brake pads to eliminate the grinding noise. Refer to the 1993 Probe Service Manual, Section 06-03, pages 2-7, for service details.

PART NUMBER	PART NAME	CLASS
F32Z-2001-C	Front Brake Pads	AG

OTHER APPLICABLE ARTICLES: NONE
WARRANTY STATUS:
Eligible Under Bumper To Bumper Warranty Coverage

OPERATION	DESCRIPTION	TIME
932306A	Replace Front Disc Brake Pads	0.8 Hr.

DEALER CODING

BASIC PART NO.	CONDITION CODE
2001	56

OASIS CODES: 301000, 702100

Technical Service Bulletin # **9562** Date: **950327**

Brakes - Roughness During Application

Article No.
95-6-2

03/27/95

BRAKES - ROUGHNESS CONCERN DURING BRAKE

APPLICATION

FORD:
1982-95 CROWN VICTORIA, ESCORT, MUSTANG, THUNDERBIRD
1984-94 TEMPO
1986-95 TAURUS
1988-93 FESTIVA
1989-95 PROBE
1994-95 ASPIRE
1995 CONTOUR

LINCOLN-MERCURY:
1982-86 CAPRI
1982-87 LYNX
1982-95 CONTINENTAL, COUGAR, GRAND MARQUIS, TOWN CAR
1984-92 MARK VII
1984-94 TOPAZ
1986-95 SABLE
1987-89 TRACER
1991-94 CAPRI
1991-95 TRACER
1993-95 MARK VIII
1995 MYSTIQUE

MERKUR:
1985-88 XR4TI
1988-89 SCORPIO

ISSUE:
Early replacement of the brake components, rotors and pads due to brake roughness concern, is lowering customer's view of quality. The cause of brake roughness is due to small changes in braking torque when the brake is applied. The following are the major reasons for the brake torque variation:

^ Runout of disc rotor

^ Rusted rotor surface

^ Warped rotor due to improper wheel lug nut tightening (torque too high or uneven)

^ Varied rotor thickness around the disk

^ Transferred patches of lining material on the rotor surface

^ Uneven tire wear and balance

ACTION:
Diagnose brake roughness by referring to the following procedure for service details.

SERVICE PROCEDURE/DIAGNOSIS STEPS

NOTE:
BEGIN WITH STEP 1 AND FINISH WITH STEP 6.

1. Check the Condition of Tires and Their Balance

Sometimes the brake roughness concern is not brake roughness at all. In fact, some complaints are due to the out-of-round and out-of-balance tires or broken steel cord (for steel belted radial tires) in the tires. The effects of these problems show up at all conditions of driving, but may seem worse when braking. That fact can be used to correctly determine that the customer is not experiencing brake-caused roughness. If however, there is brake roughness in addition to tire problems, then both problems must be repaired. If the inspection shows that tires are contributing to roughness (vibration or roughness present in all driving conditions, not just braking) they should first be balanced and rotated using normal maintenance procedures then follow the steps below to correct the brake roughness.

2. Check the Wheel Lug Nut Tightening Torque

Uneven and/or out of specification torque on the wheel lug nuts will cause the brake rotors to warp. Up to 0.005 inch rotor runout can occur due to improper lug nut tightening. The first thing to check for is the consistency of torque of the lug nuts on each wheel. If the torque readings are not within 20% of each other, that gives an indication of a cause of the concern of brake roughness. Improper lug nut tightening can have the following order of effects:

1. Rotor runout

2. Rotor thickness variation

3. Brake torque variation

4. Brake roughness

Ultimately, the rotor may be damaged and must be resurfaced. Follow the procedure in the Service Manual for resurfacing the rotors. Proper torque must be used when a resurfaced or new rotor is installed. Use of a torque wrench is again stressed, or as an alternative, the Rotunda "ACCUTORQ" 164-R0314 or equivalent must be used. When installing a new rotor, do not machine the rotor on a bench lathe. Any surface contamination can be removed with grease solvents or with very light hand sanding. Refer to # 3, CHECK FOR RUST/CONTAMINATION...

3. Check for Rust/Contamination on Mounting Surfaces

Surface rust or contaminations on the wheel-to-rotor and rotor-to-hub flange surfaces should be cleaned with very light hand sanding. Use garnet paper 100A or aluminum oxide 150J grit. DO NOT USE HARSH, ABRASIVE TOOLS. If the cleaning is not done, it will contribute to the runout of the rotor when assembled, which will cause brake roughness later on.

Any removal of rust on the rotor braking surfaces using harsh abrasive tools is not approved by Ford. The on-car turning procedure is the only sanctioned method at this time to deal with repairing rusty rotors. Since the thickness of the rotors are manufactured to less than 0.0004 inch tolerance, using hand held tools on the rotor surfaces can not guarantee maintaining the tolerance. Concerns will occur of brake roughness with rotor thickness variation of 0.0008 inch or less on certain very sensitive vehicles.

4. Check for Runout of the Front Rotor on the Car and Front Hub Mount

Runout of the rotor mounted on car should not exceed 0.003 inch. With the wheel off, fasten the lug nuts back on to hold the rotor onto the hub. The fastening torque should not exceed 81 N.m (60 lb-ft) and should be even. With the dial indicator attached to the spindle, slowly rotate the rotor to get the total indicated runout. This value should not exceed the Total Indicated Runout (TIR) as specified in the appropriate Service Manual. If it exceeds specification, first index the rotor one (1) wheel stud at a time. If the readings still exceed 0.003 inch, then the hub face runout should be checked. Repeat the runout check procedure on the hub face. If the runout exceeds 0.002 inch, the hub must be replaced, otherwise the rotor must be resurfaced on the vehicle or replaced.

5. Check for Rear Brake Roughness

Except for the vehicles with separate drum in disc parking brake (e.g., Crown Victoria, Grand Marquis and Town Car) the rear brake can be actuated by actuating the parking brake. Attempt to slow down the vehicle from 48 km/h (30 mph) with the transmission in neutral using the parking brake. If roughness is present, then the rear brakes need to be serviced. If roughness is not present, then front brakes need servicing. To service the rear brakes follow the procedure above for servicing the front brakes.

6. Check for Proper Caliper Operation

Inspect the calipers for leaks and brake fluid contamination. Any leaks from the wheel cylinders and seals must be repaired per the Service Manual. Also, inspect for glazing of the brake pads which may indicate a seized caliper piston, frequent severe or unintentional brake dragging by the customer. Repair as specified in the Service Manual.

OTHER APPLICABLE ARTICLES: 92-12-4, 92-19-2, 92-4-3, 93-16-2, 93-26-2, 93-6-3, 94-25-1, 94-25-2, 95-6-4

WARRANTY STATUS: INFORMATION ONLY

OASIS CODES: 301000 Technical Service Bulletin # **97-19-4** Date: **970915**

Brake and Rotor - Service Tips

1993 Ford Probe L4-121 2.0L DOHC VIN A MFI

Article No.
97-19-4

09/15/97

BRAKES - BRAKE AND ROTOR SERVICE TIPS

FORD:
1993-94 TEMPO
1993-97 PROBE, THUNDERBIRD
1993-98 CROWN VICTORIA, ESCORT, MUSTANG, TAURUS
1994-97 ASPIRE
1995-98 CONTOUR

LINCOLN-MERCURY:
1993-94 TOPAZ
1993-97 COUGAR
1993-98 CONTINENTAL, GRAND MARQUIS, SABLE, TOWN CAR, TRACER
1994-98 MARK VIII
1995-98 MYSTIQUE

LIGHT TRUCK:
1993-96 BRONCO
1993-97 AEROSTAR
1993-98 RANGER, VILLAGER
1995-98 WINDSTAR
1997-98 EXPEDITION

ISSUE:
This TSB article is intended to give a technician information regarding brake repairs to help reduce unnecessary repairs.

ACTION:
Refer to the following list when performing brake repairs.

^ Where rotors are the causal part, linings should only be replaced if they are damaged, e.g., cracked, taper wear, heavily grooved, etc., or if specifically instructed in a TSB.

^ Where linings are the causal part, rotors should not be machined unless they are heavily grooved or if specifically instructed in a TSB.

Other exceptions would include instances where the non-causal parts are found to be below minimum serviceable thickness or if the technician estimates that the parts will not last until the next service interval. Since these parts are classified as wear items (such as: linings, pads, rotors, and drums) replacement is not covered under warranty.

OTHER APPLICABLE ARTICLES: NONE
WARRANTY STATUS: INFORMATION ONLY
OASIS CODES: 301000

Technical Service Bulletin # **95131** Date: **950703**

A/C Evaporator Core - On Vehicle Leak Test Requirement

Article No.
95-13-1

07/03/95

^ AIR CONDITIONING - EVAPORATOR CORE - "ON-VEHICLE" LEAK TEST REQUIRED FOR WARRANTY CLAIM

^ AIR CONDITIONING - "ON-VEHICLE" EVAPORATOR CORE LEAK TEST REQUIRED FOR WARRANTY CLAIM

FORD:
1992-93 FESTIVA
1992-94 TEMPO
1992-95 CROWN VICTORIA, ESCORT, MUSTANG, PROBE, TAURUS, THUNDERBIRD
1994-95 ASPIRE
1995 CONTOUR

LINCOLN-MERCURY:
1992 MARK VII
1992-94 CAPRI, TOPAZ
1992-95 CONTINENTAL, COUGAR, GRAND MARQUIS, SABLE, TOWN CAR, TRACER

1993 Ford Probe L4-121 2.0L DOHC VIN A MFI

1993-95 MARK VIII
1995 MYSTIQUE

LIGHT TRUCK:
1992-95 AEROSTAR, BRONCO, ECONOLINE, EXPLORER, F-150-350 SERIES, F-47, RANGER
1993-95 VILLAGER
1995 WINDSTAR

This TSB article is being republished in its entirety to correct the referenced Step for the cleaning procedure.

ISSUE:
An "on-vehicle" air conditioning evaporator core leak test is required before replacing any A/C evaporator core within the warranty period.

ACTION:
Perform the "on-vehicle" air conditioning evaporator core leak test before replacing the evaporator core. Refer to the following Evaporator Core Leak

Test Procedure.

EVAPORATOR CORE LEAK TEST PROCEDURE

NOTE:
ALL FITTINGS REQUIRED TO PERFORM THE LEAK TEST ARE INCLUDED IN TEST ADAPTER KIT D93L-1 9703-B OR EQUIVALENT.

CAUTION:
DISCONNECT THE LIQUID LINE AND SUCTION ACCUMULATOR FROM THE EVAPORATOR CORE TUBES. DO NOT LEAK TEST AN EVAPORATOR CORE WITH THE SUCTION ACCUMULATOR ATTACHED TO THE CORE TUBES. REFRIGERANT OUTGASSING FROM OIL AND DESICCANT IN THE ACCUMULATOR WILL INDICATE A FALSE LEAK CONDITION.

1. Verify that the manifold gauge set is capable of holding vacuum.

   a. Connect the RED and BLUE hoses together using a 1/4" (6.35 mm) flare coupling.

   b. Connect the gauge set YELLOW hose to a known good vacuum pump.

   c. Turn the vacuum pump ON and open both gauge set valves.

   d. Operate the vacuum pump for 1 minute and close both gauge set valves. The low side gauge should indicate approximately 30" of vacuum.

   e. Allow the gauge set, with vacuum applied, to sit for at least 30 minutes.

   f. If the gauge reading drops during that time, the gauge set hose connections, gauges, or valves are leaking and should be repaired before proceeding with the leak test.

2. Clean the evaporator core tube fittings.

   a. For threaded connections, wipe any dirt or debris from the sealing surfaces with a clean lint-free rag.

   b. If the evaporator core tube fittings are the female Spring Lock design, check the inside of each fitting for scratches, corrosion, or debris from deteriorated 0-rings.

   c. If scratches, corrosion, or debris are found, the leak test results may not be accurate unless the fitting is properly cleaned. Refer to Step 3 for cleaning procedure.

3. Clean the Spring Lock fittings as follows:

   a. Remove any surface residue from the inside of the female Spring Lock Coupling by polishing with 400 grit emery cloth or equivalent.

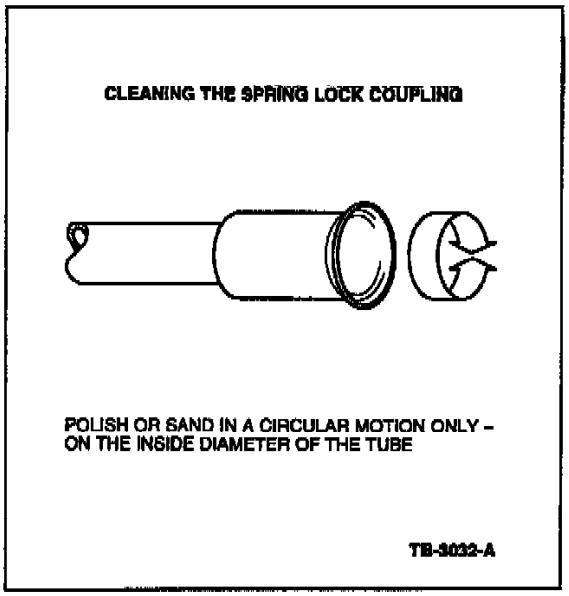

Figure 1

b. Polish the female surface by using a twisting motion so that any scratches made will not cross the 0-ring sealing surface. See Figure 1.

c. Perform additional polishing of surface using 600 grit emery cloth or equivalent.

d. Remove all residue from the polishing operations by wiping the fittings with a lint-free rag.

e. Connect the appropriate test fittings from Test Adapter Kit D93L-19703-B, or equivalent, to the evaporator tube connections.

5. Connect the RED and BLUE hoses from the manifold gauge set to the test fittings on the evaporator core. Connect the YELLOW hose to a known quality vacuum pump.

NOTE:
THE AUTOMATIC SHUTOFF VALVES ON SOME GAUGE SET HOSES DO NOT OPEN WHEN CONNECTED TO THE TEST FITTINGS. IF AVAILABLE, USE HOSES WITHOUT SHUTOFF VALVES. IF HOSES WITH SHUTOFF VALVES ARE USED, CHECK TO BE SURE THE VALVE OPENS WHEN ATTACHED TO THE TEST FITTINGS OR INSTALL AN ADAPTER WHICH WILL ACTIVATE THE VALVE. THE TEST IS NOT VALID IF THE SHUTOFF VALVE DOES NOT OPEN, ONLY THE HOSE WILL BE TESTED.

6. Open both gauge set valves and start the vacuum pump.

a. Turn the A/C system blower on low to allow the vacuum pump to operate for a minimum of 45 minutes after the gauge set low pressure gauge indicates 30" Hg. The 45 minute evacuation is necessary to remove any refrigerant from oil left in the evaporator core.

b. If the refrigerant is not completely removed from the oil, outgassing will occur and degrade the vacuum and appear as a refrigerant leak.

7. If the low pressure gauge reading will not drop to 30" Hg when the valves on the gauge and manifold set are open and the vacuum pump is operating, close the gauge set valves and observe the low pressure gauge. If the pressure rises rapidly to zero, a large leak is indicated. Recheck the test fitting connections and gauge set connections before replacing the evaporator core.

8. The following information is helpful in determining if a leak is present.

^ If the low pressure gauge reading rises 10 or more inches of vacuum from the 30" position in 10 minutes, a leak is indicated.

^ If a very small leak is suspected, wait 30 minutes and observe the vacuum gauge.

^ If a small amount of vacuum is lost, operate the vacuum pump with the gauge valves open for an additional 30 minutes with the system blower on low to remove any remaining refrigerant from the oil in the evaporator core. Then, recheck for loss of vacuum as outlined.

^ If a very small leak is suspected, allow the system to sit overnight with vacuum applied and check for vacuum loss.

NOTE:
ALWAYS REMEMBER THAT A LEAKING FITTING, GAUGE SET OR HOSE CONNECTION WILL APPEAR AS A LEAKING EVAPORATOR CORE.

9. If the evaporator core does leak, as verified by the above procedure, install a new evaporator core. Follow the appropriate Service Manual procedure.

OTHER APPLICABLE ARTICLES: NONE

SUPERSEDES: 94-10-7
WARRANTY STATUS: INFORMATION ONLY
OASIS CODES: 208000, 208200, 290000

Technical Service Bulletin # **95184** Date: **950911**

Air Conditioning - Approved Flushing Procedures

Article No.
95-18-4

09/11/95

AIR CONDITIONING - FORD APPROVED FLUSHING
PROCEDURES - SERVICE TIP

FORD:
1985-86 LTD
1985-88 EXP
1985-94 TEMPO
1985-95 CROWN VICTORIA, ESCORT, MUSTANG, THUNDERBIRD
1986-96 TAURUS
1989-93 FESTIVA
1989-95 PROBE
1994-95 ASPIRE
1995-96 CONTOUR

LINCOLN-MERCURY:
1984-92 MARK VII
1985-86 MARQUIS
1985-87 LYNX
1985-94 TOPAZ
1985-95 COUGAR, GRAND MARQUIS, TOWN CAR
1985-96 CONTINENTAL
1986-96 SABLE
1987-89 TRACER
1991-93 CAPRI
1991-95 TRACER
1993-95 MARK VIII
1995-96 MYSTIQUE

MERKUR:
1985-89 XR4TI
1988-89 SCORPIO

LIGHT TRUCK:
1985-90 BRONCO II
1985-95 BRONCO, ECONOLINE, F-150-350 SERIES
1985-96 RANGER
1986-95 AEROSTAR
1991-96 EXPLORER
1993-95 VILLAGER
1995-96 WINDSTAR

This TSB is being republished in its entirety to
include Labor Operations for system flushing.

ISSUE:
Ford Motor Company has approved a procedure to provide technicians with a non-CFC method of flushing contaminated A/C system heat exchangers (evaporators and condensers). This procedure allows the A/C components to be cleaned and flushed while installed in the vehicle. The types of contamination flushed include particle matter which results from compressor or desiccant failure and the gummy residue which may form when refrigerant oil is overheated. Some Ford authorized HFC-134a retrofit kit procedures will also require A/C system flushing to remove mineral oil for capacity reasons.

ACTION:
Refer to the following text for proper flushing procedures.

The flushing procedure is a two-step process which involves the use of an A/C Flusher. The Flusher is used to do the following:

1. Circulate the flushing solvent through the A/C system heat exchangers in the reverse direction of normal refrigerant flow (back flushing). Particle matter is filtered from the returning solvent and the solvent is returned to the reservoir for continued circulation.

2. Remove the flushing solvent from the A/C system. In this step, pressurized air (90-125 psi/620-862 kPa) is used to push and evaporate any remaining flush solvent from the heat exchangers.

Only Rotunda Item No. 014-00990 A/C Flushing kit which includes 014-00991 A/C Flusher, 014-00992 A/C Flusher Filling Kit. and F4AZ-19579-A A/C Flushing Solvent (case of 4 gallons/15 L), is approved for use on Ford vehicles. No other flushing device or solvent is approved by Ford Motor Company for flushing A/C systems. The use of other equipment or solvent may cause damage to the A/C system and the flushing unit.

Minimum time for flushing is 15 minutes and minimum time for air flushing is 30 minutes. Failure to continue air purge for the entire 30 minutes as specified may result in residual amounts of flush solvent contaminating the A/C system. Residual flush solvent in a functioning A/C system may lead to A/C system failure.

Do not flush through orifice tubes. TXVs, accumulator/driers, receiver/driers, mufflers or hoses. Internal plumbing and material make-up of these components make it impossible to properly remove the debris and/or residual flushing solvent.

One (1) gallon (3.8 L) of Ford A/C System Flushing Solvent is used in this device and is intended for one (1) vehicle only. It may be used to flush both heat exchangers on an individual vehicle, but under no circumstances should it be used on more than one (1) vehicle. The filter used when flushing is also intended for use on one (1) vehicle only.

NOTE:
DURING THE FLUSHING PROCESS, THIS MATERIAL MAY COLLECT RESIDUE FROM THE A/C SYSTEM, WHICH MAY INCLUDE CFC-12. DISPOSE OF THE SOLVENT AND FILTER IN ACCORDANCE WITH FEDERAL, STATE AND LOCAL REGULATIONS.

Use of A/C system filter kits as prescribed in TSB 94-15-5 is optional if the A/C system is flushed. Filter kit use is recommended after flushing if the system is highly contaminated. If the hoses are clogged with debris, hose replacement is required.

Always remember to match oil properly, replace the accumulator/drier and orifice tube, or TXV and receiver/drier when servicing an A/C system with a compressor or desiccant failure.

The following vehicles require A/C system flushing with retrofit kits to remove mineral oil for capacity reasons.

^ 1993 Probe 2.0L and 2.5L
^ 1988-90 Escort 1.9L EFI
^ 1989-93 Thunderbird Super Coupe
^ 1986-92 Mark VII
^ 1991-93 Capri 1.6L and 1.6T
^ 1988-93 Festiva 1 .3L
^ 1987-90 Tracer 1.6L
^ 1985-89 XR4Ti
^ 1988-89 Scorpio

OTHER APPLICABLE ARTICLES: 94-15-5
SUPERSEDES: 95-8-1
WARRANTY STATUS: Eligible Under The Provisions Of Bumper To Bumper Warranty Coverage For 1991-95 Lincolns And All Other 1992-95 Models

OPERATION	DESCRIPTION	TIME
951804A	Flush Evaporator	1.0 Hr.
951804B	Flush Condenser	1.0 Hr.

DEALER CODING

BASIC PART NO.	CONDITION CODE
19703	49

OASIS CODES: 208000, 208200, 208999

Technical Service Bulletin # **97-19-11** Date: **970915**

Heater Core - On Car Pressure Test For Warranty Claim

Article No.
97-19-11

09/15/97

1993 Ford Probe L4-121 2.0L DOHC VIN A MFI

COOLING SYSTEM - "ON-VEHICLE" HEATER CORE PRESSURE TEST REQUIRED FOR WARRANTY CLAIM

FORD:
1993-97 PROBE, THUNDERBIRD
1993-98 CROWN VICTORIA, ESCORT, MUSTANG, TAURUS
1995-98 CONTOUR

LINCOLN-MERCURY:
1993-97 COUGAR
1993-98 CONTINENTAL, GRAND MARQUIS, SABLE, TOWN CAR, TRACER
1995-98 MYSTIQUE

LIGHT TRUCK:
1993-98 ECONOLINE, EXPLORER, F SUPER DUTY, F-150-350 SERIES, RANGER, VILLAGER
1995-98 WINDSTAR
1997-98 EXPEDITION, MOUNTAINEER
1998 NAVIGATOR

ISSUE:
An "On-Vehicle" heater core pressure test is required before replacing any heater core within the warranty period.

HEATER CORE PRESSURE TEST TOOL REQUIREMENTS	
Tool Description	**Tool Number**
Radiator/Heater Core Pressure Tester	014-R1072
Adapter	Part of 014-R1072
Plug	Part of 014-R1072
Heater Hose	Obtain Locally
Heater Hose	Obtain Locally
Hose Clamps	Obtain Locally

ACTION:
Perform the "On-Vehicle" heater core pressure test by referring to the following heater core leak test procedure.

HEATER CORE LEAK TEST PROCEDURE

Use the heater core pressure test to determine if the heater core is leaking. Symptoms associated with a leaking heater core include:

^ Engine coolant leaking into the passenger compartment

^ Engine coolant blown onto the windshield during defrost operation

^ Engine coolant odor inside the passenger compartment

1. Partially drain cooling system.

2. Disconnect both heater core hoses.

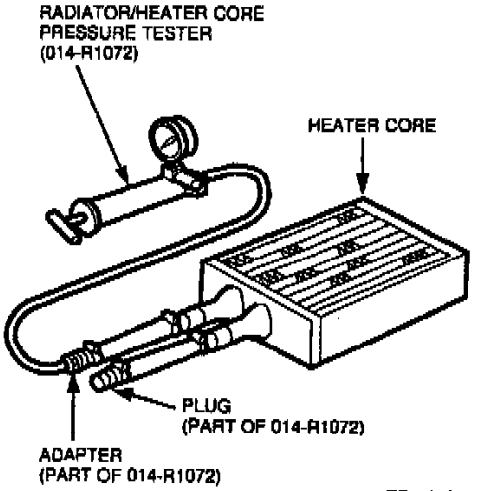

Figure 1 TB-5216-A

3. Attach two (2) pieces of heater hose to the heater core inlet and outlet tubes and clamp (Figure 1).

4. Install Plug (part of 014-R1072) into one (1) heater hose and clamp (Figure 1).

5. Fill heater core and hoses with water.

6. Install Adapter (part of 0144-R1072) into other heater hose and clamp (Figure 1).

7. Attach Radiator/Heater Core Pressure Tester (014-R1072) to Adapter (part of 014-R1072) (Figure 1).

8. Close the bleed valve and the tester and pump air into the heater core until 241 kPa (35 psi) is reached on the tester gauge.

9. Observe the gauge after 3 minutes. The pressure should not drop. If the pressure does drop, there is a leak. Check the hose connections and retest if you find a leak.

10. Replace heater core if pressure drops and hose connections do not leak.

11. Do not replace heater core if pressure does not drop. Pressure test engine cooling system for leaks elsewhere.

12. Reconnect heater core and refill cooling system after all necessary repairs.

OTHER APPLICABLE ARTICLES: NONE
WARRANTY STATUS: INFORMATION ONLY
OASIS CODES: 208000, 208100, 208999, 290000, 402000

Technical Service Bulletin # **9494** Date: **940504**

Steering Gear - Clunk/Knock Noise While Turning

Article No.
94-9-4

05/04/94

^ STEERING - "CLUNK/KNOCK" NOISE FROM STEERING WHILE TURNING - VEHICLES BUILT THROUGH 3/16/94

^ NOISE - "CLUNK/KNOCK" FROM STEERING WHILE TURNING - VEHICLES BUILT THROUGH 3/16/94

FORD:
1993-94 PROBE

ISSUE:
A "clunk/knock" noise may be heard from the steering rack assembly while turning the steering wheel from left to right. This may be caused by insufficient yoke plug (pinion) preload. Steering performance is unaffected.

ACTION:
If the noise is loud, remove the steering gear assembly and adjust pinion preload using the revised specification. Refer to the following procedure for service details.

1. Remove the steering gear from the vehicle. Refer to the appropriate model year Probe Service Manual, Section 11-02.

2. Secure the steering gear in a soft-jawed vise.

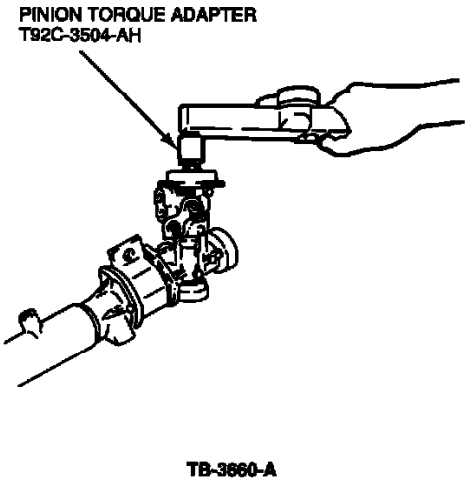

Figure 1

3. Measure the rack yoke preload using Pinion Torque Adapter T92C-3504-AH. The correct torque at the neutral position +/- 90~ should be 1.0-1.4 N-m (9-12 lb.in.). At any other position, the torque should be 1.6 N-m (15 lb.in.), Figure 1.

4. If the rack preload is not within specifications, loosen the yoke locking nut.

NOTE:
APPLY THREAD LOCKING COMPOUND TO THE EXPOSED THREADS OF THE YOKE PLUG.

5. Use Yoke Plug Adapter T81P-3504-U to tighten the yoke plug to 9.8 N-m (87 lb.in.), then loosen it. Tighten the yoke plug again to 5 N-m (39-48 lb.in.), then loosen it 20~.

CAUTION:
DO NOT ALLOW THE YOKE PLUG TO TURN.

6. Install the yoke locking nut. Use Yoke Locknut Wrench T88C-3504-KH to tighten the yoke locking nut while holding the yoke plug to 40-59 N-m (36-43 lb.ft.).

OTHER APPLICABLE ARTICLES: NONE
WARRANTY STATUS:
Eligible Under The Provisions Of Bumper To Bumper Warranty Coverage

OPERATION	DESCRIPTION	TIME
940904A	Adjust Steering Gear Pinion Pre-Load - Auto Trans	2.0 Hrs.
940904B	Adjust Steering Gear Pinion Pre-Load - Manual Trans	2.1 Hrs.

DEALER CODING

BASIC PART NO.	CONDITION CODE
3504	07

OASIS CODES: 303000, 702000, 702100, 790000

Technical Service Bulletin # **9319B16** Date: **930929**

Main & Crankpin Journal - Diameter Revision

Article No.
93-19B-16

09/29/93

SERVICE MANUAL - 1993 - PAGE 03-01A-91 - ENGINE - 2.0L - MAIN JOURNAL AND CRANKPIN JOURNAL MAXIMUM OUT-OF-ROUND VALUES REVISED

FORD:
1993 PROBE

ISSUE:
Maximum out-of-round values for main journal and crankpin journal require revision. Page 03-01A-91 of the 1993 Probe Service Manual is affected.

CLEANING AND INSPECTION (Continued)

Main Journal and Crankpin Journal Diameters

Inspect the main journal and crankpin journal diameters. Measure the diameter of each journal at two different points in the directions as shown.

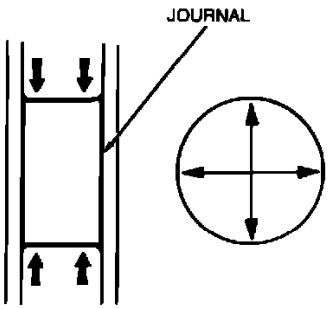

A14474-A

The standard main journal diameter is 55.937-55.955mm (2.2022-2.2029 inches).

The maximum out-of-round value for the main journal is 0.003mm (0.0001 inch).

The standard crankpin journal diameter is 47.940-47.955mm (1.8874-1.8880 inches).

The maximum out-of-round value for the crankpin journal is 0.003mm (0.0001 inch).

If a main journal diameter is less than 55.937 mm (2.2022 inches) or a crankpin journal is less than 47.940mm (1.8874 inches), grind the journal to match an undersize bearing.

Main and Connecting Rod Bearings

Inspect the main bearings and connecting rod bearings for peeling, scoring, or other damage. Bearings that have a scored, chipped, or worn surface should be replaced. Typical examples of unsatisfactory bearings and their causes are shown below. Check the clearance of bearings that appear to be satisfactory with plastigage. Refer to the procedure explained later in this Section.

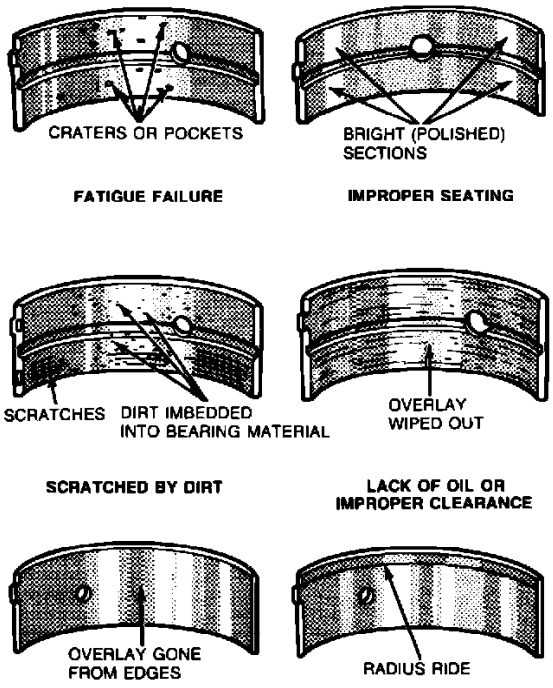

A8509-B

Clean the bearings and caps thoroughly in solvent and dry them with compressed air.

Inspecting Main or Connecting Rod Bearing Oil Clearances

Before installing the crankshaft, use Plastigage to inspect the main and connecting rod bearing oil clearances.

1. Clean the crankshaft journals. Inspect the journals and thrust faces for nicks, burrs, or roughness that would cause premature bearing wear.

   NOTE: Install the thrust bearings with the oil groove facing the crankshaft.
2. Install the bearings to be checked.

   NOTE: Do not rotate the crankshaft when measuring the oil clearances.
3. Position the crankshaft into the cylinder block.

   NOTE: An unsupported crankshaft and counterweight will compress the Plastigage and cause an erroneous reading.
4. Support the adjoining counterweight of the bearing to be checked with a jack.
5. Position Plastigage on the top of the journals in the axial direction.
6. Install the corresponding bearing caps according to the cap number and arrow mark.

Revised 8/93

ACTION:
Refer to the page in this TSB article for the revised information.

OTHER APPLICABLE ARTICLES: NONE
WARRANTY STATUS: INFORMATION ONLY
OASIS CODES: 490000

Technical Service Bulletin # **93227** Date: **931027**

Hydraulic Lash Adjusters - Metallic Ticking Noise

Article No.
93-22-7

1993 Ford Probe L4-121 2.0L DOHC VIN A MFI

10/27/93

^ ENGINE OIL SYSTEM - CONTAMINATION RESULTS IN "TICKING" NOISE FROM HYDRAULIC LASH ADJUSTERS AFTER HOT SOAK - 2.0L AND 2.5L VEHICLES BUILT BEFORE 7/28/93

^ NOISE - "TICKING" SOUND FROM HYDRAULIC LASH ADJUSTERS AFTER HOT SOAK - 2.0L AND 2.5L VEHICLES BUILT BEFORE 7/28/93

FORD:
1993 PROBE

ISSUE:
A metallic "ticking" noise from the engine valve hydraulic lash adjusters may occur after a hot soak. This noise may be heard under the following conditions:

^ When returning to idle speed after freeway driving

^ After a hot soak at idle speed just after restarting

This condition may be caused by the factory oil becoming contaminated and is usually noticed in the first 1000-3000 miles (1600-4800 km) of new vehicle operation. The contamination can cause the oil to have increased foaming characteristics.

ACTION:
Replace the engine oil and oil filter. Refer to the following service procedure.

NOTE:
THE FOLLOWING TWO SYMPTOMS ARE NORMAL AND REQUIRE NO CORRECTIVE ACTION: (1) "TICKING" NOISE FOR UP TO 3 SECONDS AFTER INITIAL START UP. (2) NOISE JUST AFTER OIL AND FILTER CHANGE. AIR IS PURGED OUT THROUGH NORMAL DRIVING.

1. Replace the engine oil and filter.

2. Be sure that the oil level is between "F" and "L" on the oil dipstick.

3. If the "ticking" noise is still present after replacing the oil and filter, run the engine for 8 minutes at 3000 rpm to remove any air trapped in the hydraulic lash adjusters.

PART NUMBER	PART NAME	CLASS
XO-5W30-QSP	Oil 5W30 (Pk./12)	V
F32Z-6731-A	Oil Filter - 2.5L	V
F12Z-6731-B	Oil Filter - 2.0L	V

Parts Block

OTHER APPLICABLE ARTICLES: NONE
WARRANTY STATUS:
Eligible Under Warranty Coverage Up To The First Scheduled Maintenance Interval (5000 Miles)

OPERATION	DESCRIPTION	TIME
932207A	Change Engine Oil and Filter	0.3 Hr.

DEALER CODING

BASIC PART NO.	CONDITION CODE
6675	49

OASIS CODES:
401000, 497000, 499000, 702000

Technical Service Bulletin # **96213** Date: **961007**

Engine - Noise/Misses/Stalls/Runs Rough/Low Power

Article No.
96-21-3

10/07/96

^ MISSES - STALLS - RUNS ROUGH - REDUCED POWER - METALLIC "TICKING" NOISE FROM HYDRAULIC LASH ADJUSTERS -

1993 Ford Probe L4-121 2.0L DOHC VIN A MFI

2.0L ENGINES BUILT THROUGH 5/17/96

^ REDUCED POWER - MISSES - STALLS - RUNS ROUGH - METALLIC "TICKING" NOISE FROM HYDRAULIC LASH ADJUSTERS - 2.0L ENGINES BUILT THROUGH 5/17/96

^ RUNS ROUGH - STALLS - MISSES - REDUCED POWER - METALLIC "TICKING" NOISE FROM HYDRAULIC LASH ADJUSTERS - 2.0L ENGINES BUILT THROUGH 5/17/96

^ STALLS - RUNS ROUGH - MISSES - REDUCED POWER - METALLIC "TICKING" NOISE FROM HYDRAULIC LASH ADJUSTERS - 2.0L ENGINES BUILT THROUGH 5/17/96

^ ENGINE - METALLIC "TICKING" NOISE FROM HYDRAULIC LASH ADJUSTERS - STALLS, RUNS ROUGH, MISSES AND/OR LACKS POWER - 2.0L ENGINES BUILT THROUGH 5/17/96

^ NOISE - METALLIC "TICKING" NOISE FROM HYDRAULIC LASH ADJUSTERS - STALLS, RUNS ROUGH, MISSES AND/OR LACKS POWER - 2.0L ENGINES BUILT THROUGH 5/17/96

FORD:
1993-96 PROBE

This TSB article is being republished in its entirety to revise the service procedure and include the latest level parts.

ISSUE:
A metallic "ticking" noise may be heard at idle and may be accompanied by concerns of stalling, rough running, missing and/or reduced power. This may be caused by an uneven wear pattern on the oil pump control plunger resulting in air entrapment within the lubrication system causing the hydraulic lash adjusters to bleed down. The oil pump plunger also can stick, causing the hydraulic lash adjusters to pump up and the cylinder head valves to stay open.

ACTION:
Replace the oil pump. The revised Oil Pump (F72Z-6600-AA) has an improved oil pump plunger to reduce the possibility of air entrapment within the oil pump. Refer to the following Service Procedure for details.

SERVICE PROCEDURE

LASH ADJUSTER BLEED DOWN DIAGNOSTIC PROCEDURE

1. Run engine at 4000 rpms for 5 minutes or until oil temperature reaches 99°C (210°F).

2. Turn the engine off and let stand for 5 minutes.

3. Start the engine and let idle for 10 minutes.

4. If a metallic "ticking" noise is present, replace the oil pump. Refer to Section 03-01A of the appropriate year Probe Service Manual for replacement procedures.

5. If the "ticking" noise is not present, the oil pump is not the cause. Refer to the appropriate year Probe Service Manual for further diagnosis.

STICKING OIL PUMP PLUNGER DIAGNOSTIC PROCEDURE

1. With the engine cold, install Engine Oil Pressure Gauge (T73L-6600-A), or equivalent, and Transmission Test Adapter (D870-77000-A), or equivalent.

2. Start the engine and run at 3000 rpms while monitoring oil pressure.

3. The oil pressure should be below 689.5 kPa (100 psi) and drop to below 551.6 kPa (80 psi).

NOTE:
OIL PRESSURE WILL CONTINUE TO APPROACH NORMAL SPECIFICATION RANGE AS ENGINE TEMPERATURE INCREASES. OIL PRESSURE SPECIFICATION AT NORMAL OPERATING TEMPERATURE AND 3000 RPMS IS 393-489.5 kPa (57-71 PSI).

4. If oil pressure is above 689.5 kPa (100 psi) and remains high during warm up, replace the oil pump. Refer to Section 03-01A of the appropriate year Probe Service Manual for replacement procedures.

5. If oil pressure is within specifications, refer to the appropriate year Probe Service Manual for additional diagnostic procedures.

PART NUMBER	PART NAME
F72Z-6600-AA	Oil Pump
JE10-40355	Exhaust Manifold Nut
F2O1-40352	Exhaust Clamp

99946-0800	Nut
F42Z-6626-A	Oil Pump Inlet Tube Gasket
F32Z-6B652-A	O-Ring
F6AZ-19562-AA	Silicone Gasket And Sealant

OTHER APPLICABLE ARTICLES: NONE

SUPERSEDES: 94-12-7

WARRANTY STATUS: Eligible Under The Provisions Of Bumper To Bumper Warranty Coverage

OPERATION	DESCRIPTION	TIME
962103A	Replace Oil Pump	3.7 Hrs.

DEALER CODING

BASIC PART NO.	CONDITION CODE
6600	30

OASIS CODES: 497000, 499000, 607000, 607400, 607700, 608000, 608400, 608500, 609000, 609400, 609500, 613000, 613500, 614000, 614500

Technical Service Bulletin # **9525** Date: **950130**

Water Pump/Pulley - Design Modification

Article No.
95-2-5

01/30/95

COOLING SYSTEM - WATER PUMP AND PULLEY MODIFICATION - 2.5L ENGINE - VEHICLES BUILT FROM 4/16/92 THROUGH 8/12/93

FORD:
1993-94 PROBE

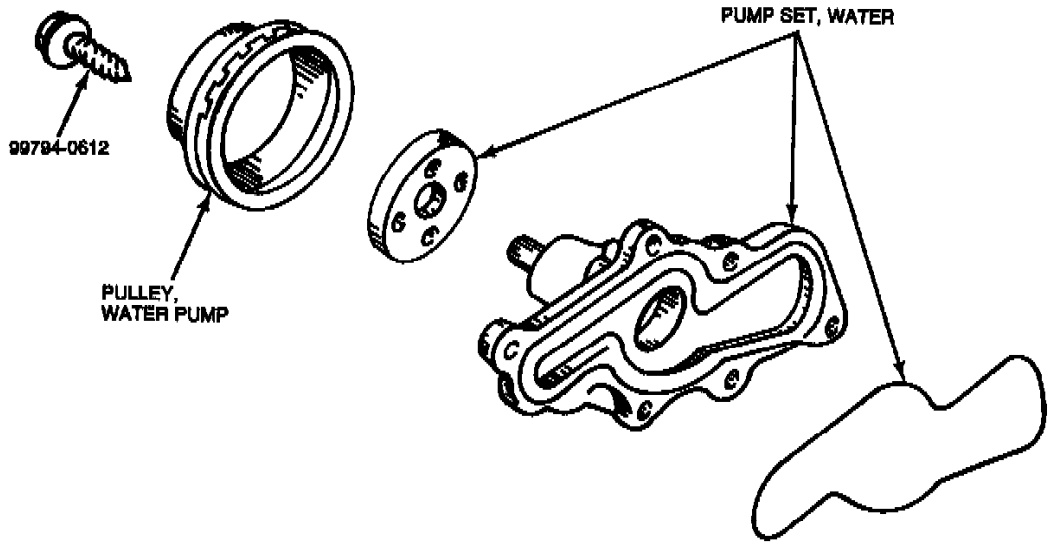

	OLD	NEW
Build Date	4/16/92 – 8/11/93	8/12/93 – Present
Pump Set, Water	F32Z-8501-A	F42Z-8501-A
Pulley, Water Pump	F32Z-8509-B	F42Z-8509-A

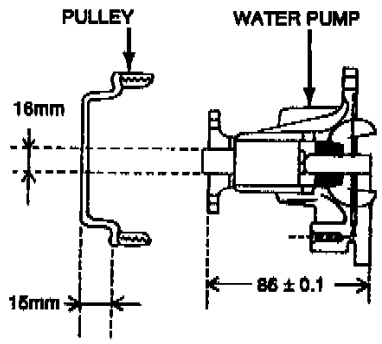

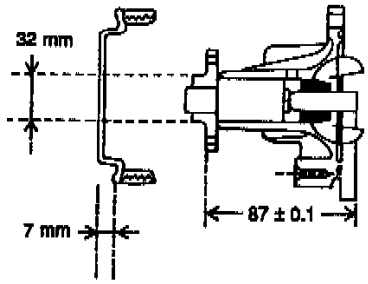

TB-3861-A

Figure 1

ISSUE:
A new level design water pump and water pump pulley is now available for service. Refer to Figure 1.

ACTION:
Always install the new design water pump pulley when installing the new design water pump. Refer to the appropriate year Probe Service Manual, Group 03, Section 01B (2.5L) for water pump and pulley service details.

PART NUMBER	PART NAME
F42Z-8501-A	Water Pump Set
F42Z-8509-A	Water Pump Pulley

OTHER APPLICABLE ARTICLES: NONE
WARRANTY STATUS: INFORMATION ONLY
OASIS CODES: 402000, 490000

Cooling System - New System Diagnostics

Article No.
93-24-8

11/24/93

^ HESITATION - ROUGH IDLE - ENGINE COOLANT DOES NOT REACH NORMAL OPERATING TEMPERATURE - MEDIUM TRUCKS WITH 7.0L ENGINES

^ HESITATION/STALL DURING ACCELERATION OR DECELERATION

^ IDLE - ROUGH - ENGINE COOLANT DOES NOT REACH NORMAL OPERATING TEMPERATURE

^ HEATER/DEFROSTER - POOR HEATER OUTPUT - THERMOSTAT STUCK OPEN

^ COOLING SYSTEM - NEW DIAGNOSTICS FOR ENGINES THAT DO NOT REACH NORMAL OPERATING TEMPERATURE

FORD:
1983-94 ESCORT
1984-87 EXP
1984-94 CROWN VICTORIA, MUSTANG, TEMPO, THUNDERBIRD
1986-94 TAURUS

LINCOLN-MERCURY:
1984-86 CAPRI
1984-87 LYNX
1984-92 MARK VII
1984-94 CONTINENTAL, COUGAR, GRAND MARQUIS, TOPAZ, TOWN CAR
1986-94 SABLE
1988-89 TRACER
1991-94 CAPRI, TRACER

MERKUR:
1985-89 XR4TI
1988-89 SCORPIO

LIGHT TRUCK:
1984-94 BRONCO, ECONOLINE, F-150-350 SERIES, RANGER
1985-90 BRONCO II
1986-94 AEROSTAR
1988-94 F SUPER DUTY
1991-94 EXPLORER

This TSB article is being republished in its entirety to include 1994 model year vehicles.

ISSUE:
Engine performance concerns such as hesitation or stall, rough idle, and/or poor fuel economy may be caused by the thermostat stuck in an open position or opening at a temperature lower than specified.

ACTION:

COOLING SYSTEM DIAGNOSIS CHART		
CONDITION	**POSSIBLE SOURCE**	**ACTION**
• Engine fails to reach normal operating temperature	• Coolant level	• Check level in radiator and coolant recovery reservoir.
	• Leakage	• Check for leaks using pressure test.
• Low gauge reading	• Thermostat operation	• Check thermostat. Refer to "Thermostat Diagnosis" procedure.
	• Temperature gauge or sending unit	• Check gauge and gauge sender. Refer to Service Manual Section 13-01.
• Poor heater/defroster performance	• Coolant level	• Check level in radiator and coolant recovery reservoir.
	• Leakage	• Check for leaks using pressure test.
	• Thermostat operation	• Check Thermostat. Refer to "Thermostat Diagnosis" procedure.
	• Blend door operation	• Check blend door for binding and proper operation.
	• Mode door operation	• Check mode door for binding and proper operation.
	• Blower fan operation	• Check blower fan for proper operation and control.
	• Heater core plugged	• Flush cooling system.

Use the following "Cooling System Diagnosis" procedure to diagnose a cooling system that may not be reaching normal operating temperature. Follow the "Thermostat Diagnosis" procedure to determine if the thermostat may be at fault. Check the thermostat without removing it from the vehicle by using Rotunda Service Coolant Temperature Monitor Harness 007-00064.

A new cooling system diagnosis procedure has been developed for engines that do not reach normal operating temperature. A new thermostat diagnosis procedure also has been developed, using a new service coolant temperature monitor harness.

NOTE:
THIS PROCEDURE WILL DIAGNOSE ONLY COOLING SYSTEMS THAT MAY NOT BE REACHING NORMAL OPERATING TEMPERATURE. IT WILL NOT DIAGNOSE A THERMOSTAT THAT CAUSES AN ENGINE OVERHEAT CONDITION.

NOTE:
THE ESCORT/TRACER SPECIFIC APPLICATION FOR THIS ARTICLE IS AS FOLLOWS:

^ 1983-1990 Escort 1.9L and 1.6L

^ 1991-1994 Escort 1.9L

^ 1991-1994 Tracer 1.9L Only

THERMOSTAT DIAGNOSIS

NOTE:
DISCONNECTING THE POWERTRAIN CONTROL MODULE (PCM) TO ATTACH A BREAKOUT BOX OR AN EEC IV MONITOR WILL ERASE THE ADAPTIVE LEARNING FROM MEMORY AND MAY "HIDE" A DRIVE CONCERN TEMPORARILY UNTIL THE ADAPTIVE LEARNING IS RE-LEARNED.

NOTE:
THIS PROCEDURE IS MOST ACCURATE IF PERFORMED INDOORS AT LESS THAN 100~F (38~C) AMBIENT TEMPERATURE. THIS TEST MAY BE PERFORMED WITH OR WITHOUT THE HOOD OPEN AND WITH THE ENGINE WARM OR COLD.

CAUTION:
ALWAYS VENT THE EXHAUST TO THE OUTSIDE WHEN PERFORMING THIS TEST.

1. Check the coolant level in the radiator and coolant recovery reservoir.

2. With the key in the "off" position, proceed as follows:

   a. Remove the engine coolant temperature (ECT) sensor harness connector.

   b. Attach Rotunda Service Coolant Temperature Monitor Harness 007-00064 as a jumper between the PCM and the ECT.

   c. Attach Rotunda 73 Digital Multimeter 105-00051 or equivalent to the thermostat monitor harness. Voltage values (0-5vdc) may now be monitored while the sensor retains its connection to the wiring harness.

NOTE:
A ROTUNDA NEW GENERATION STAR TESTER (NGS) 007-00500 OR THE ROTUNDA SERVICE BAY DIAGNOSTIC SYSTEM (SBDS) 001-00001 MAY BE USED TO MONITOR THE ECT ON VEHICLES EQUIPPED WITH DATA COMMUNICATIONS LINK (DCL). THE

SBDS SEQUENCE TO USE FOR THE SCREEN IS "TOOLBOX - ELECTRONIC ENGINE CONTROL AND DCL - ITEM".

3. Vehicles equipped with electric engine cooling fan(s) must have a fan running during this test (high or low speed may be used). Two methods may be used to turn the fan(s) on:

   a. Disconnect the A/C compressor clutch power supply and turn the climate control to A/C "ON". Or

   b. Disconnect the power supply to the cooling fan and supply 12 volts direct to the fan connector from the battery.

NOTE:
A GROUND MAY BE REQUIRED FOR SOME APPLICATIONS.

4. Place transmission in "park" or "neutral".

NOTE:
RUNNING THIS TEST WITH THE VEHICLE IN GEAR OR WITH THE A/C COMPRESSOR CLUTCH ENGAGED (RUNNING) WILL CAUSE IMPROPER DIAGNOSIS

5. Start the engine and allow to idle throughout this test:

   a. Allow engine to run for 2 minutes, then record ECT voltage.

   b. From now on, record ECT voltage every 60 seconds.

   c. When the ECT voltage trend changes direction or changes only slightly (0.03 volts or less) from the previous reading, record this as the thermostat opening voltage.

VOLTAGES AND CORRESPONDING TEMPERATURES							
ECT (volts)	3.00	2.01	1.01	0.75	0.59	0.50	0.40
Coolant Temperature (°F)	71	109	159	180	195	206	221
Coolant Temperature (°C)	22	43	71	82	91	97	105

   d. Use the "Voltage and Corresponding Temperature Chart" shown to obtain actual coolant temperatures.

6. If the opening voltage is GREATER than 0.75 volts (less than 18~ F/ 82~ C), or 0.85 volts (170~ F/ 77~ C) for 2.3L HSC engine only, replace the thermostat. Refer to the dealer Master Parts Catalog for correct thermostat usage.

7. If the thermostat opening voltage is LESS than 0.75 volts (greater than 180~ F/ 82~ C), or 0.85 volts (170~ F/ 77~ C) for 2.3L HSC engine only, the thermostat is good and should NOT be replaced. The "Cooling System Diagnosis Chart" should be referenced for further instructions.

NOTE:
The 10~ F opening temperature difference for the 2.3L HSC engine is due to the ECT sensor location.

OTHER APPLICABLE ARTICLES: NONE
SUPERSEDES: 93-14-4
WARRANTY STATUS: INFORMATION ONLY
OASIS CODES:
208000, 208100, 402000, 608000, 608400, 609000, 609400, 611000, 611500, 622000, 690000

Technical Service Bulletin # **96232** Date: **961104**

Engine - Reduced Power On Acceleration

Article No.
96-23-2

11/04/96

REDUCED POWER - DURING ACCELERATION - 2.0L VEHICLES BUILT THROUGH 8/7/95

FORD:
1993-95 PROBE

ISSUE:
There may be reduced power during acceleration on some vehicles. This may be caused by a partially collapsed exhaust flex pipe that restricts exhaust flow.

ACTION:

1993 Ford Probe L4-121 2.0L DOHC VIN A MFI

Replace the exhaust flex pipe. The revised pipe is less restrictive. Refer to the following Service Procedure for details.

SERVICE PROCEDURE

1. Verify the concern by test driving the vehicle and checking performance while accelerating.

2. Remove the 14 mm nuts at the exhaust inlet pipe-to-catalyst flange.

3. Separate the catalyst from the inlet pipe. Refer to the appropriate year Probe Service Manual for details.

4. Using a small flashlight, look into the inlet pipe and inspect the flex webbing for deterioration, restrictions or collapsing. It necessary, replace the exhaust inlet pipe with a revised pipe.

PART NUMBER	PART NAME
F62Z-5246-E	Exhaust Flex Pipe
JE10-40355	Exhaust Manifold Nut
F201-40352	Exhaust clamp
99946-0800	Nut
F32Z-9450-A	Gasket
F02Z-5E241-A	Gasket - Exhaust Pipe-To-converter

OTHER APPLICABLE ARTICLES: NONE

WARRANTY STATUS: Eligible Under The Provisions Of Bumper To Bumper Warranty Coverage And Emissions Warranty Coverage

OPERATION	DESCRIPTION	TIME
962302A	Inspect And Replace Converter Inlet Pipe	0.6 Hr.

DEALER CODING

BASIC PART NO.	CONDITION CODE
5246	71

OASIS CODES: 403000, 614000, 614500, 614600

Technical Service Bulletin # **98-5A-4** Date: **980318**

Lug Nuts - Proper Installation/Torqueing Procedure

Article No.
98-5A-4

^ BRAKES - PREVENTING BRAKE VIBRATION - SERVICE TIP

^ WHEELS - PROPER LUG TORQUE PROCEDURES - SERVICE TIP

FORD:
1972-97 THUNDERBIRD
1976-86 LTD
1976-97 MUSTANG
1981-97 CROWN VICTORIA
1982-88 EXP
1982-98 ESCORT
1984-94 TEMPO
1986-97 TAURUS
1988-93 FESTIVA
1989-97 PROBE
1994-97 ASPIRE
1995-98 CONTOUR

LINCOLN-MERCURY:
1979-83 MONARCH, ZEPHYR
1979-97 COUGAR
1980-83 MARK VI
1980-98 CONTINENTAL, TOWN CAR
1981-86 LYNX

1993 Ford Probe L4-121 2.0L DOHC VIN A MFI

1983-86 MARQUIS
1984-92 MARK VII
1984-94 TOPAZ
1986-97 SABLE
1987-89 TRACER
1987-97 GRAND MARQUIS
1991-94 CAPRI
1991-97 TRACER
1993-98 MARK VIII
1995-98 MYSTIQUE

LIGHT TRUCK:
1979-96 BRONCO
1979-97 ECONOLINE, F-150-350 SERIES
1984-90 BRONCO II
1984-97 RANGER
1986-97 AEROSTAR
1988-97 F SUPER DUTY
1991-97 EXPLORER
1993-97 VILLAGER
1995-98 WINDSTAR
1997 EXPEDITION
1998 NAVIGATOR

ISSUE:
The use of air impact tools to tighten wheel lug nuts can lead to overtightened and/or unevenly tightened wheel lug nuts. Air impact tools typically used for wheel lug nut removal and installation can generate up to 475 N.m (350 lb-ft) of torque. Overtightened and/or unevenly torqued wheel lug nuts may cause:

^ Brake vibration

^ Distortion of the wheel hub

^ Distortion of the brake rotor

^ Brake rotor runout

^ Damage to the wheel

^ Damage to the wheel nuts and studs

ACTION:
All wheel lug nuts should only be tightened to specification using a torque wrench or by using the Rotunda ACCUTORO 164-R0314 or equivalent on a 1/2" drive air impact tool. The "ACCUTORO" lug nut sockets limit the torque of the air impact tool, preventing overtightening or uneven tightening of the wheel lug nuts. The torque limiting devices (regulators) on air impact tools will not reduce the output torque enough to prevent overtightening of the wheel lug nuts.

ACCUTORQ SOCKETS

VEHICLE	YEAR	SIZE	LB-FT TORQUE	TOOL COLOR
FORD				
Aspire	1994-97	21mm	80	Light Brown
Contour	1995-98	19mm-3/4"	100	Grey
Crown Victoria	1981-97	13/16"	100	Dark Brown
Escort ZX2	1998	21mm	80	Light Brown
Escort	1991-98	21mm	80	Light Brown
Escort	1982-90	19mm-3/4"	100	Grey
EXP	1982-88	19mm-3/4"	100	Grey
Festiva	1988-93	21mm	80	Light Brown
Granada	1975-82	13/16"	100	Dark Brown
LTD	1975-86	13/16"	100	Dark Brown
Mustang	1979-97	13/16"	100	Dark Brown
Probe	1989-97	21mm	80	Light Brown
Taurus	1986-97	19mm-3/4"	100	Grey
Tempo	1984-94	19mm-3/4"	100	Grey
Thunderbird	1987-97	19mm-3/4"	100	Grey
Thunderbird	1972-86	13/16"	100	Dark Brown
LINCOLN				
All Models	1980-98	13/16"	100	Dark Brown
MERCURY				
Capri	1991-94	21mm	80	Light Brown
Capri	1979-86	13/16"	100	Dark Brown
Cougar	1987-97	19mm-3/4"	100	Grey
Cougar	1979-86	13/16"	100	Dark Brown
Lynx	1981-88	19mm-3/4"	100	Grey
Marquis	1983-86	13/16"	100	Dark Brown
Mystique	1995-98	19mm-3/4"	100	Grey
Monarch, Zephyr	1979-83	13/16"	100	Dark Brown
Sable	1986-97	19mm-3/4"	100	Grey
Topaz	1984-94	19mm-3/4"	100	Grey
Tracer	1991-97	21mm	80	Light Brown
Tracer	1987-89	21mm	80	Light Brown
Grand Marquis	1987-97	19mm-3/4"	100	Grey
LIGHT TRUCK				
E-150/F-150	1979-97	13/16"	100	Dark Brown
E/F-250/350	1989-97	7/8"	140	Turquoise
E/F-250/350 (Dual Rears)	1994-97	7/8"	140	Turquoise
F-Super Duty	1988-97		140	N/A
Aerostar	1986-97	19mm-3/4"	100	Grey
Bronco	1979-96	13/16"	100	Dark Brown
Bronco II	1984-90	19mm-3/4"	100	Grey
Courier	1979-83	21mm	65	Black
Explorer	1991-97	13/16"	100	Dark Brown
Ranger	1984-97	19mm-3/4"	100	Grey
Windstar	1995-98	13/16"	100	Dark Brown
Villager	1993-97	21mm	80	Light Brown
Expedition	1997	19mm-3/4"	100	Grey
Navigator	1998	19mm-3/4"	100	Grey

TB-4196-B

Figure 1

NOTE:
REFER TO THE APPROPRIATE SERVICE MANUAL OR THE CHART IN FIGURE 1 FOR THE CORRECT WHEEL LUG NUT TORQUE SPECIFICATION. THE CHART IN FIGURE 1 ALSO PROVIDES THE CORRECT "ACCUTORO" LUG NUT SOCKET TO USE.

The "ACCUTORO" socket is intended for lug nut installation, not removal. When using the "ACCUTORO" socket, the output torque of the air impact tool must be set to 217-339 N.m (160-250 lb-ft), usually this will be the lowest setting on the air impact tool.

The "ACCUTORO" lug nut sockets are available through Rotunda Equipment. The four-piece set (164-R0314) fits most Ford Motor Company cars and light trucks. The tool set consists of four (4) lug nut sockets and a storage case. The set can be ordered by calling Rotunda Equipment at 1-800-ROT-UNDA (768-8632).

CAUTION:
AIR IMPACT TOOLS SHOULD NOT BE USED TO TIGHTEN WHEEL LUG NUTS UNLESS THE "ACCUTORO" LUG NUT SOCKET OF THE CORRECT SPECIFICATION IS USED.

NOTE:

1993 Ford Probe L4-121 2.0L DOHC VIN A MFI

DO NOT USE AIR IMPACT TOOLS ON LOCKING WHEEL LUG NUTS. THEY ARE TO BE HAND-TORQUED ONLY.

OTHER APPLICABLE ARTICLES: NONE

SUPERSEDES: 97-17-6

WARRANTY STATUS: INFORMATION ONLY

OASIS CODES: 301000, 303000, 306000

Technical Service Bulletin # **97-11-1** Date: **970527**

Door - Replacement Service Procedure

Article No.
97-11-1

05/27/97

DOORS - SERVICE PROCEDURE MODIFICATION FOR
DOOR REPLACEMENT

FORD:
1993-97 PROBE

ISSUE:
The 1993-96 Probe door part numbers have been replaced by the 1997 level door part number. In order to install a 1997 door on a previous model year vehicle, a revised mounting procedure for the power window regulator must be used.

ACTION:
Perform the following Service Procedure when replacing the door on 1993-96 vehicles with a 1997 level door. This procedure will correctly mount the 1993-96 power window regulator to the 1997 level door.

SERVICE PROCEDURE

1. Refer to the appropriate year Probe Service Manual, Section 01-11, for removal of door, door trim panel, and door window glass.

1993-96 DOOR

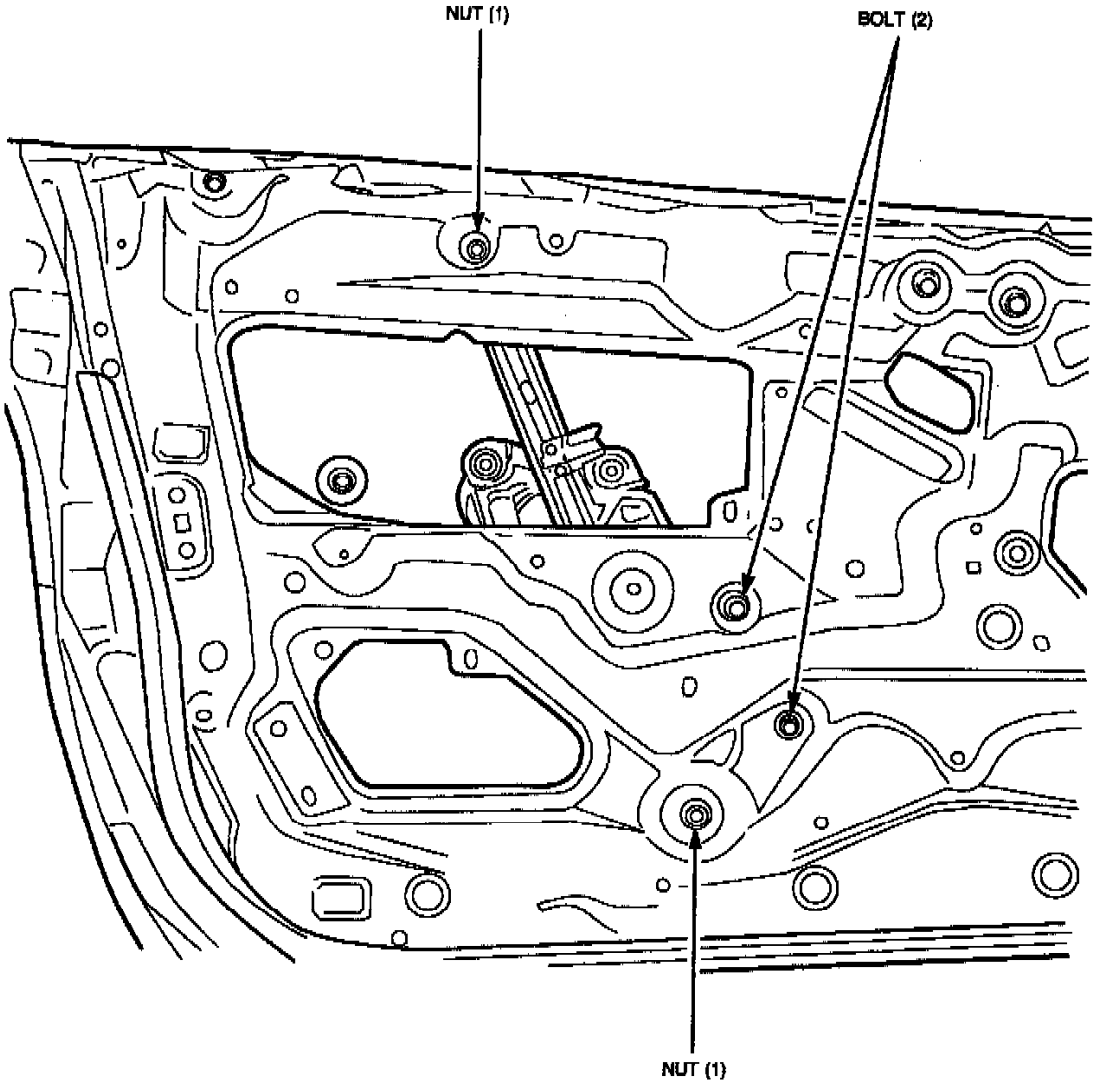

TB-5056-A

Figure 1

2. Remove the two (2) power window regulator bolts and two (2) power window regulator nuts (Figure 1).

3. Disconnect the power window regulator electrical connector and remove the regulator through the service hole.

4. Install the power window regulator into the new 1997 level door through the service hole.

1997 DOOR

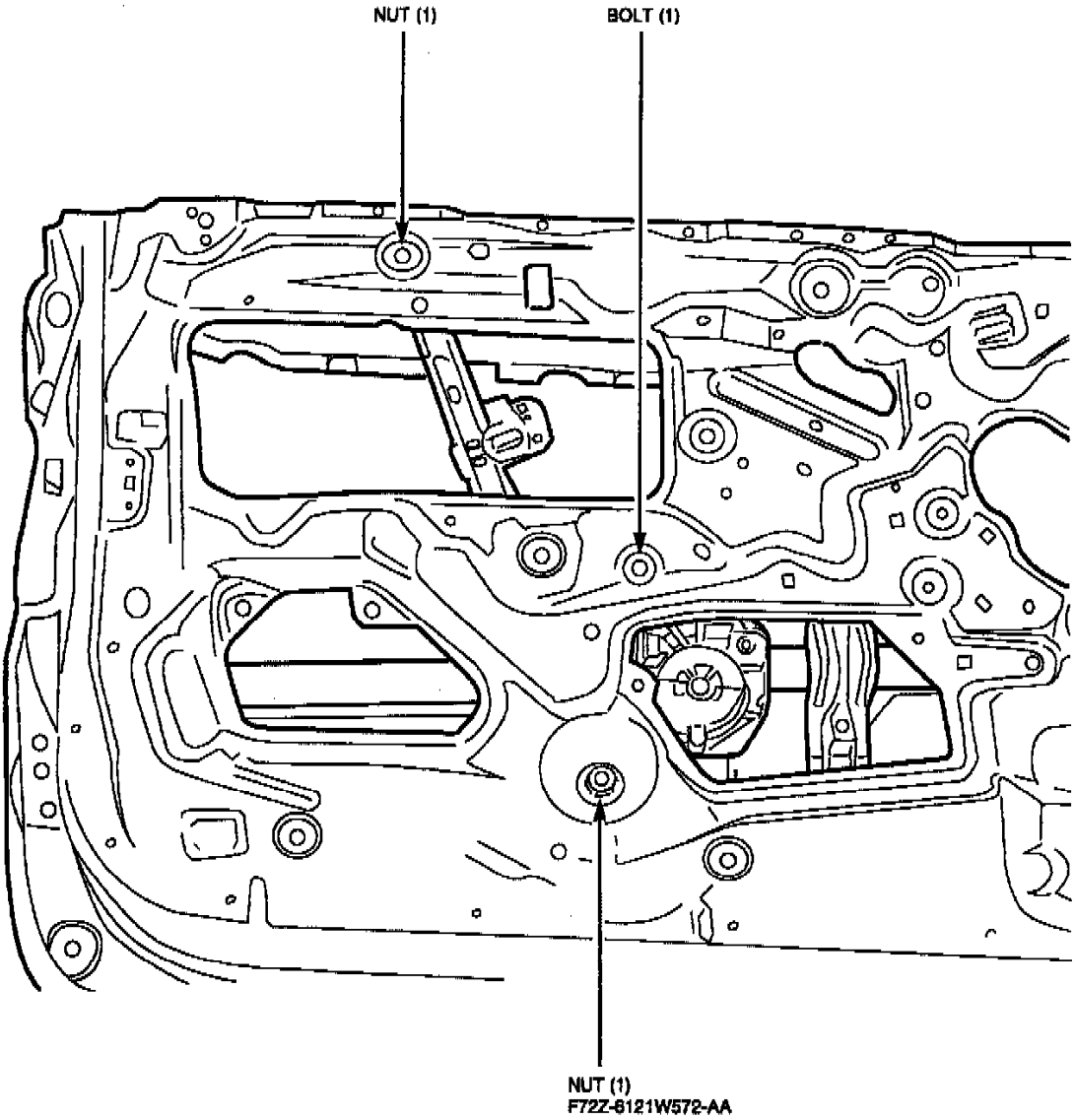

TB-5057-A

Figure 2

5. Mount the power window regulator to the door by installing the power window regulator upper nut (1) and power window regulator upper bolt (1) (Figure 2).

6. Tighten the power window regulator bolt (1) to 7-10 N-m (60-87 lb-in). Tighten the power window regulator nut to 22-24 N.m (16-18 lb-ft).

7. Discard the remaining nut (1) and bolt (1).

8. Install the new Nut/Washer (F72Z-6121W572-AA) to the lower attachment (Figure 2).

9. Tighten the new nut/washer to 22-24 N-m (16-18 lb-ft).

10. Refer to appropriate year Probe Service Manual, Section 01-11, for installation of door, door trim panel, and door window glass.

PART NUMBER	PART NAME
F72Z-6121W572-AA	Nut/Washer

OTHER APPLICABLE ARTICLES: NONE

WARRANTY STATUS: INFORMATION ONLY

OASIS CODES: 102000, 111000

Technical Service Bulletin # **9774** Date: **970331**

A/T - 4EAT Harsh 1-2 Upshift

Article No.
97-7-4

03/31/97

TRANSAXLE - 4EAT - HARSH SHIFT FROM 1ST TO 2ND GEAR - 2.0L (1993 ONLY) AND 2.5L (1993-95) ENGINES

FORD:
1993-95 PROBE

This TSB article is being republished in its entirety to revise the service procedure and part number application.

ISSUE:
A harsh shift when shifting from 1st to 2nd gear, at normal operating temperatures, may be felt on some vehicles. This may be caused by a higher than normal control pressure passing through the main control separator plate.

ACTION:
Replace the main control separator plate, Torque Converter Clutch (TCC) solenoid and the line pressure solenoid with a revised plate and solenoids. Refer to the following Diagnostic and Repair Procedures for details.

PART NUMBER	PART NAME
F32Z-7A008-AA	Separator Plate (2.0L - 1993, 2.5L - 1994-95)
F32Z-7A008-BA	Separator Plate (2.5L - 1993)
F32Z-7G136-AA	Solenoid (2 Req'd.)
F32Z-7C155-AA	Separator Plate Gasket
F32Z-7C155-BA	Separator Plate Gasket
E92Z-7F396-A	Main Control Cover Gasket
XT-2-QDX	Motorcraft MERCON® Multi-Purpose Automatic Transmission Fluid (ATF)
99541-00407	O-Ring (2 Req'd.)

Parts Block

OTHER APPLICABLE ARTICLES: NONE

SUPERSEDES: 97-5-8

WARRANTY STATUS: Eligible Under The Provisions Of Bumper To Bumper Warranty Coverage

OPERATION	DESCRIPTION	TIME
970704A	Remove And Install Main Control, Replace Separator Plate, Torque Converter Clutch (TCC) Solenoid And Line Pressure Solenoid	1.9 Hrs.

DEALER CODING

BASIC PART NO.	CONDITION CODE
7A008	30

OASIS CODES: 501000, 504000

Diagnostic Procedure

NOTE:

BEFORE PERFORMING THE DIAGNOSTIC PROCEDURE, CHECK TO MAKE SURE THE ENGINE IS OPERATING PROPERLY. DRIVEABILITY CONCERNS CAN CAUSE THE TRANSAXLE TO SHIFT ERRATICALLY.

1. Check Throttle Position (TP) sensor by moving throttle from closed to wide open and monitoring voltage (normal is 0.5 volts at closed throttle). Test drive vehicle after TP sensor adjustment, if needed. If concern is resolved, return vehicle to owner. If concern is still present, proceed to the following Step 2.

2. Install gauge and check control pressure (refer to the appropriate year Probe Service Manual, Section 07-01B). Control pressure should be checked at idle and at stall speed with engine at normal operating temperature and gearshift selector in "D" range.

   ^ Control pressure at idle - 60-78 psi

   ^ Control pressure at stall speed - 161-172 psi

3. If control pressure is lower than specification at idle or stall speed, refer to the appropriate year Probe Service Manual, Section 07-01B, for further diagnosis.

4. If control pressure exceeds the specification at idle, refer to the appropriate year Probe Service Manual, Section 07-01B, for further diagnosis.

5. If control pressure is normal or slightly higher than specification at stall speed, refer to the Repair Procedure in this TSB article for replacement of the main control separator plate and TCC solenoid.

Repair Procedure

1. Clean and dry the exterior of the transaxle thoroughly before disassembly.

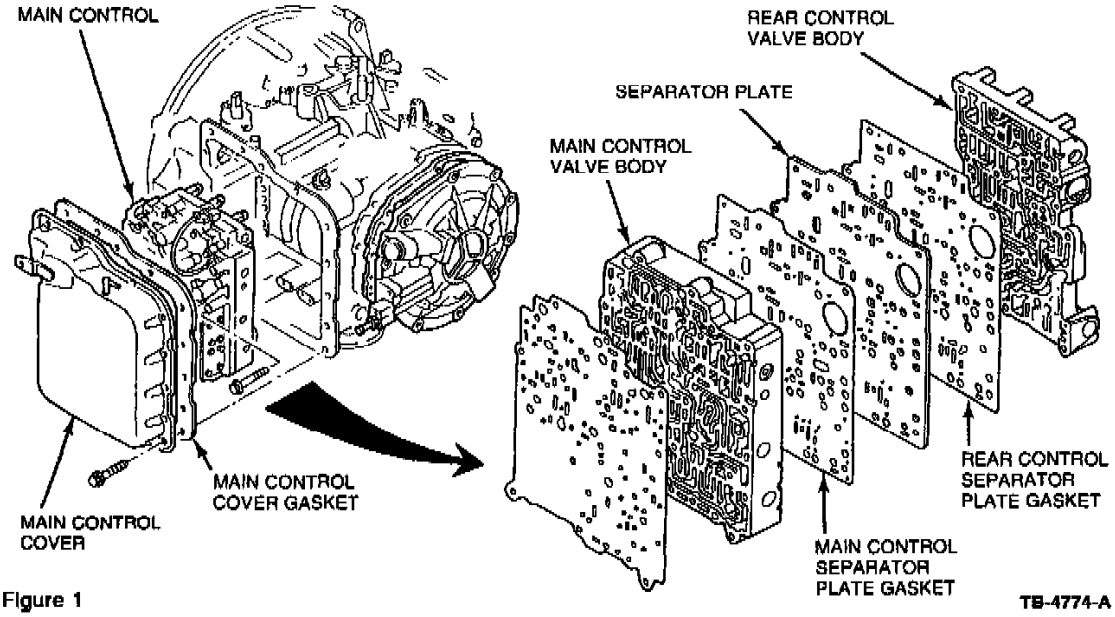

Figure 1

2. Remove drain plug and drain fluid. Remove main control cover and main control (Figure 1). Refer to the appropriate year Probe Service Manual, Section 07-01B, for removal procedure.

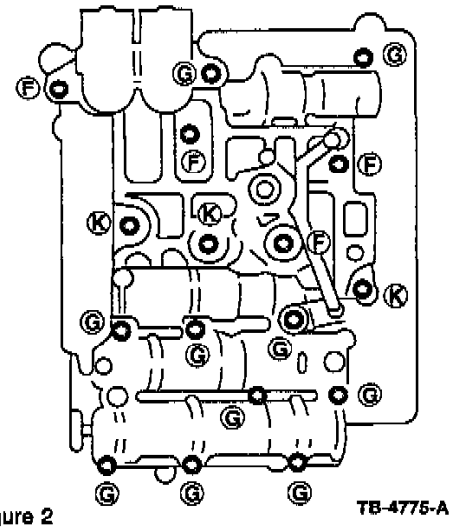

Figure 2

3. Place main control on a clean work table so that the rear control is facing upward (Figure 2).

NOTE:
CHECK THE VEHICLE BUILD DATE. IF VEHICLE WAS BUILT AFTER 1/3/95, SKIP THE FOLLOWING STEPS 4-13. THESE

VEHICLES HAVE THE MODIFIED SEPARATOR PLATE.

4. Remove oil pipe, oil baffle, 2-3 shift solenoid and 3-4 shift solenoid.

NOTE:
THE MAIN CONTROL AND BOLTS HAVE LETTERS WHICH INDICATE THE PROPER POSITION.

5. Remove bolts F, G, and K as shown in Figure 2.

6. Carefully remove the rear control valve body and rear control separator plate gasket.

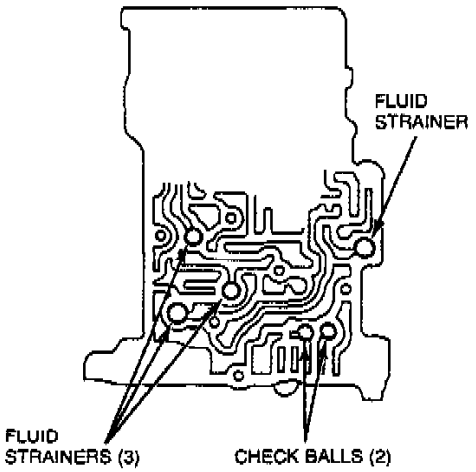

Figure 3 TB-4776-A

NOTE:
THE TWO (2) CHECK BALLS AND FOUR (4) STRAINERS ARE LOCATED UNDER THE CONTROL. USE CARE TO MAKE SURE STRAINERS AND CHECK BALLS ARE NOT MISPLACED (FIGURE 3).

7. Memorize location of the two (2) balls and the four (4) fluid strainers (Figure 3).

8. Lightly tap on separator plate surface to make sure check balls stay in the main control and then remove the separator plate and main control separator plate gasket.

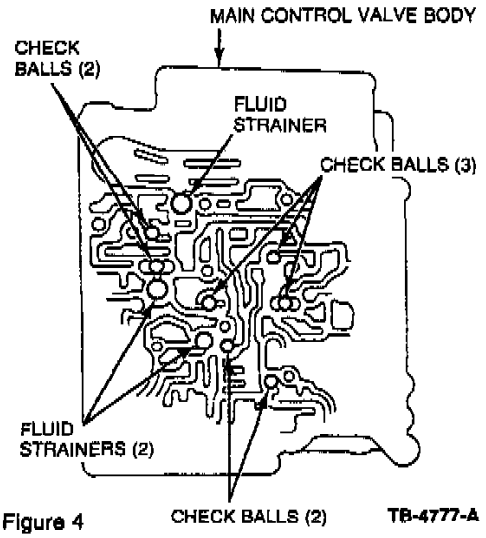

Figure 4 TB-4777-A

9. Clean the surface of the main control valve body and check the location of the seven (7) check balls and three (3) fluid strainers (Figure 4).

10. Install main control Separator Plate Gasket (F32Z-70155-AA), Separator Plate (-7A008-), and rear control Separator Plate Gasket (F32Z-70155-BA) to main control valve body.

11. Install the two (2) check balls and the four (4) fluid strainers in the same position as before disassembling (Figure 3).

12. Clean and install rear control valve body and torque bolts to 6.5-7.8 N.m (58-69 lb-in).

13. Replace 0-rings (99541-00407) on oil pipe (2 required) and install oil pipe, oil baffle, 2-3 shift solenoid and 3-4 shift solenoid and torque bolts to 6.5-7.8 N.m (58-69 lb-in).

14. Turn main control over on bench so that the rear control is facing downward.

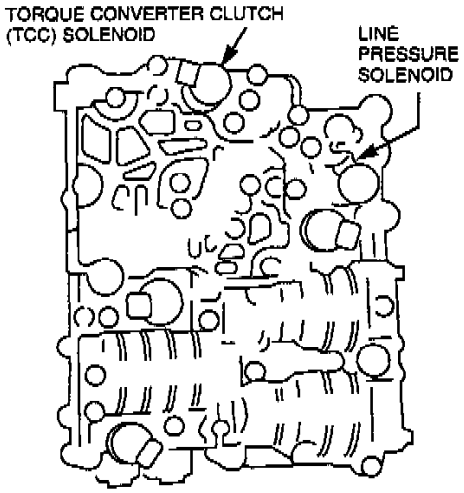

Figure 5 TB-4778-B

15. Remove line pressure and TCC solenoid and replace with revised Solenoids (F32Z-7G136-AA - 2 required) (Figure 5).

16. Install main control into transaxle and torque bolts to 6.5-7.8 N.m (58-69 lb-in).

NOTE:
THE SOLENOID CONNECTORS ARE COLOR CODED FOR PROPER INSTALLATION.

17. Install the six (6) connectors to the solenoids and the Transmission Fluid Temperature (TFT) sensor.

18. Replace the Main Control Cover Gasket (E92Z-7F396-A) and install main control cover.

19. Add 1.9L (2 quarts) of Motorcraft MERCON(R) Multi-Purpose Automatic Transmission Fluid (ATF) (XT-2-QDX). Bring transaxle to normal operating temperature and adjust fluid level.

20. Recheck control pressure at idle and stall speed. Road test vehicle to verify repair.

Technical Service Bulletin # **962612** Date: **961216**

Torque Converter - Cleaning and Replacement Guidelines

Article No.
96-26-12

12/16/96

^ TRANSAXLE - TORQUE CONVERTER REPLACEMENT GUIDELINES AND TORQUE CONVERTER/TRANSAXLE COOLING SYSTEM CLEANING PROCEDURES - SERVICE TIP

^ TRANSMISSION - TORQUE CONVERTER REPLACEMENT GUIDELINES AND TORQUE CONVERTER/TRANSMISSION COOLING SYSTEM CLEANING PROCEDURES - SERVICE TIP

FORD:
1985-86 LTD
1985-88 EXP
1985-94 TEMPO
1985-97 CROWN VICTORIA, ESCORT, MUSTANG, THUNDERBIRD
1986-97 TAURUS
1988-93 FESTIVA
1989-97 PROBE
1994-97 ASPIRE
1995-97 CONTOUR

LINCOLN-MERCURY:
1985-86 MARQUIS
1985-87 LN7, LYNX
1985-92 MARK VII
1985-94 TOPAZ
1985-97 CONTINENTAL, COUGAR, GRAND MARQUIS, TOWN CAR
1986-97 SABLE
1987-89 TRACER
1991-94 CAPRI
1991-97 TRACER

1993 Ford Probe L4-121 2.0L DOHC VIN A MFI

1993-97 MARK VIII
1995-97 MYSTIQUE

MERKUR:
1985-89 XR4TI
1988-90 SCORPIO

LIGHT TRUCK:
1985-90 BRONCO II
1985-96 BRONCO
1985-97 ECONOLINE, F-150-350 SERIES, RANGER
1986-97 AEROSTAR
1988-97 F SUPER DUTY
1991-97 EXPLORER
1993-97 VILLAGER
1995-97 WINDSTAR
1997 EXPEDITION, MOUNTAINEER

ISSUE:
Torque converter replacement guidelines and torque converter/transmission (or transaxle) cooling-system cleaning procedures are now available to reduce repeat repairs.

ACTION:
Refer to the following guideline to properly diagnose and service torque converters and to properly clean the torque converter and transmission cooling system using forward flushing/backflushing. For diagnosis, service and cleaning, refer to to the appropriate model/year Service Manual, Sections 07-01, 07-02, 03-03, 307-01, 307-02, or 303-03.

OTHER APPLICABLE ARTICLES: NONE

WARRANTY STATUS: INFORMATION ONLY

OASIS CODES: 501000, 502000, 503000, 504000

Diagnostic Procedure

Prior to torque converter replacement, all diagnostic procedures must be followed. This is to prevent the unnecessary replacement of good torque converters. Only after a complete diagnostic evaluation can the decision be made to replace the torque converter.

The normal diagnostic procedure is as follows:

1. Preliminary inspection.

2. Know and understand the customers concern.

3. Verify the concern:

- Perform the Torque Converter Clutch Operation Test

4. Perform diagnostic procedures:

   a. Run On-Board Diagnostics

- Repair all non-transmission-related Diagnostic

Trouble Codes (DTCs) first.

- Repair all transmission DTCs.

- Rerun On-Board Diagnostic to verify repair.

   b. Perform Line Pressure Test

   c. Perform Stall Speed Test

   d. Diagnosis by Symptom Routines - Use the index to locate the appropriate routine that best describes the symptom(s). The routine will list all possible components that may cause or contribute to the symptom. Check each component listed, diagnose and service as required, before servicing the torque converter.

Replacement

The torque converter must be replaced if one or more of the following statements are true:

^ A torque converter malfunction has been determined based on completed diagnostic procedures

^ A converter stud(s), impeller hub or bushing is damaged

^ If there is discoloration of the torque converter (due to overheating)

^ The torque converter is found to be out of specification when performing the following checks (as applicable):

1. Torque Converter One-way Clutch Check
2. End Play Check
3. Stator-to-Turbine Interference Check
4. Converter Leakage Check
5. Stator-to-Impeller Interference Check

    ^ If there is evidence of transmission assembly or fluid contamination due to the following failure modes:

Torque converter Replacement Policy Failure Modes Major metallic failure

Multiple clutches or clutch plate failures

Sufficient component wear which results in metallic contamination

Torque Converter & Transmission Cooling System Cleaning

When the torque converter is replaced, the following actions must take place:

1. All cooler lines must be thoroughly cleaned by Back and Forward Flushing using Service Manual procedure.
2. All coolers (in-tank and auxiliary) must be thoroughly cleaned by Back and Forward Flushing using Service Manual procedure.
3. All Cooler By-Pass Valves (CBV), it equipped, must be removed and thoroughly cleaned using Service Manual procedures. Replace rubber coated sealing washers prior to reinstalling CBV. Replace CBV if damaged or plugged.
4. Perform Transmission Cooler Flow Test - If the Transmission Cooling System fails the Flow Test, the coolers, CBVs or lines must be replaced. If the coolers are to be replaced, use only factory approved service parts.

If the torque converter is not being replaced, the following actions must take place:

1. The torque convener must be thoroughly cleaned:

    a. Torque converters with drain plugs can be cleaned using the Rotunda Torque Converter Cleaner Follow the instructions included with the equipment.

    b. Torque converters without drain plugs can be cleaned by hand. Partially fill the converter using clean transmission fluid (as recommended for the particular transmission). Hand agitate the converter and then thoroughly drain the fluid. Refill with new fluid, specified for the transmission, and reinstall.

2. All cooler lines must be thoroughly cleaned by Back and Forward Flushing using Service Manual procedure.
3. All coolers (in-tank and auxiliary) must be thoroughly cleaned by Back and Forward Flushing using Service Manual procedure.
4. All Cooler By-Pass Valves (CBV), if equipped, must be removed and thoroughly cleaned using Service Manual procedures. Replace rubber coated sealing washers prior to reinstalling CBV. Replace CBV if damaged or plugged.
5. Perform Transmission Cooler Flow Test - If the Transmission Cooling System fails the Flow Test, the coolers, CBVs or lines must be replaced. If the coolers are to be replaced, use only factory approved service parts.

REQUIRED TOOLS	
Tool Number	**Description**
014-00028	Rotunda Converter/Oil Cooler Cleaner
014-00752	Rotunda Oil Cooler Flusher Kit
T77L-7902-R	Converter Clutch Holding Tool
T76L-7902-C	Converter Clutch Torquing Tool
TOOL-4210-C	Dial Indicator With Bracketry
T80L-7902-A	End Play Checking Tool
014-R1075	Torque Converter Leak Check Tool And Gasket
007-00500	New Generation Star (NGS) Tester
007-00085D	Rotunda Transmission Tester Kit - includes all cables and overlays required for transmission/transaxle diagnosis. Refer to the Service Manual for the correct cable/overlay combination to use. Individual cables/overlays and the tester may be ordered separately from Rotunda.

Required Tools

Technical Service Bulletin # **03-14-8** Date: **030721**

A/T - Cooler Flushing Service Tips

Article No.
03-14-8

07/21/03

TRANSMISSION - NEW TRANSMISSION COOLER
FLUSHER - SERVICE TIPS

FORD:
1992-1997 CROWN VICTORIA, PROBE, THUNDERBIRD
1992-2003 ESCORT, MUSTANG, TAURUS
1994-1997 ASPIRE
1995-2000 CONTOUR
2000-2003 FOCUS
2002-2003 THUNDERBIRD
1992-1996 BRONCO
1992-1997 AEROSTAR, F SUPER DUTY, F-250 HD, F-350
1992-1999 F-250 LD
1992-2003 ECONOLINE, EXPLORER, F-150, RANGER
1995-2003 WINDSTAR
1997-2003 EXPEDITION
1999-2003 SUPER DUTY F SERIES
2000-2003 EXCURSION
2001-2003 ESCAPE, EXPLORER SPORT TRAC, EXPLORER SPORT

LINCOLN:
1992-1997 TOWN CAR
1992-2002 CONTINENTAL
1993-1998 MARK VIII
2000-2003 LS
1998-2003 NAVIGATOR
2002-2003 BLACKWOOD
2003 AVIATOR

MERCURY:
1992-1997 COUGAR, GRAND MARQUIS
1992-2000 TRACER
1992-2003 SABLE
1995-2000 MYSTIQUE
1999-2002 COUGAR
1993-2002 VILLAGER
1997-2003 MOUNTAINEER

This article supersedes TSB 00-1-5.

ISSUE

1993 Ford Probe L4-121 2.0L DOHC VIN A MFI

The number one cause for repeat transmission repairs is that contamination from the transmission cooler system (lines and tank) will work their way back into the rebuilt or new transmission. For this reason a new transmission cooler flusher has been released, "Turbo-Tank Heated Cooler Line Flusher" Rotunda Tool number 22-00001.

ACTION
The transmission cooling system (cooler and lines) MUST be flushed every time the transmission is overhauled or replaced in order to minimize the likelihood of repeat repairs. The use of this new "Turbo-Tank Heated Cooler Line Flusher" (222-00001) is the most effective way to remove contamination from its cooling system. Refer to the following Service Procedure and Equipment instructions (supplied with the "Turbo-Tank Heated Cooler Line Flusher").

SERVICE PROCEDURE

Prior methods of cooler flushing have not obtained the level of cooler cleaning and contaminant removal that is required to prevent repeat repairs. The "Turbo-Tank Heated Cooler Line Flusher" uses heated Automatic Transmission Fluid (ATF) and a pulsating action to loosen system contamination.

Previous equipment used solvents to clean & flush coolers, lines and torque-converters. There are 2 issues with this method:

^ Residual solvent contamination can cause damage to friction bonding materials within the transmission (Clutches and Bands).

^ Lack of fluid heating and agitation prevents this method from completely removing contamination from lines, in-radiator coolers and auxiliary coolers.

Aerosol Solvents should never be used for several reasons.

^ They do not provide the volume necessary to remove heavy contaminants.

^ They evaporate quickly and essentially leave contaminants in pockets, bends, or wherever they are as the solvent dries.

NOTE
YOU MUST IDENTIFY THE RETURN COOLER LINE TO START THE BACK FLUSHING PROCEDURE.

A quick way to identify the return cooler line (fluid coming out of the cooler and returning to the transmission) is to locate the return cooler line fitting on the transmission case. Refer to the following lists:

Rear Wheel Drive

^ TORQSHIFT, 4R100, E40D, C6 - The REAR transmission case filling receives the return line.

^ 4R70W, AODE, AOD - The TOP transmission case filling receives the return line.

^ A4LD, 4R44/55E, 5R55E, 5R55N, 5R55W, 5R55S

- The TOP transmission case filling receives the return line.

Front Wheel Drive

^ CD4E - The REAR or Pump End transaxle case fitting receives the return line.

^ 4F27E - The REAR or Cover End transaxle case fitting receives the return line.

^ AXOD, AXODE, AX4S, AX4N, 4F50N - The BOTTOM transaxle cooler line fitting receives the return line.

NOTE
IF AN IN-LINE FILTER HAS BEEN INSTALLED IN THE COOLER LINE, IT MUST BE REMOVED BEFORE FLUSHING THE COOLER OR COOLER LINES.

Purge the cooler and cooler line before flushing:

Located on the "Turbo-Tank Heated Cooler Line Flusher" is a fluid transfer and purge valve. This valve can be used to purge the cooler and cooler lines of contaminated fluid before starting the back flush procedure of the fluid cooling system (refer to step 5a of this Service Procedure or Equipment instructions, supplied with the "Turbo-Tank Heated Cooler Line Flusher").

Flush Procedure

1. Check and top off fluid level of the "Turbo-Tank Heated Cooler Line Flusher" tank with transmission fluid.

2. Allow the fluid in the flusher 15-30 minutes to heat up to 140° F (60° C) before using.

3. Install line adapters into the transmission cooler lines.

4. Attach the flusher's blue line to the transmission return cooler line quick disconnect.

5. Attach the flusher's red line to the transmission outlet cooler line quick disconnect.

   a. Follow equipment instructions, to purge cooler lines and cooler prior to starting flushing procedure (using factory installed purge valve and clear hose on "Turbo-Tank Heated Cooler Line Flusher").

6. Allow the cooling system to back-flush for 10-15 minutes, then flush the cooler in a forward/normal flow direction for an additional 10-15 minutes.

For ordering information on this new "Turbo-Tank Heated Cooler Line Flusher" (222-00001), contact Rotunda at 800-ROTUNDA (800-768-8632 or outside U.S. 262-656-5805).

CAUTION

THIS FLUSHER CANNOT BE USED TO FLUSH COOLERS ON VEHICLES EQUIPPED WITH THE TEMPERATURE BYPASS-TYPE TRANSMISSION COOLER CURRENTLY FOUND IN 1998-2003 CROWN VICTORIA, GRAND MARQUIS, AND TOWN CAR VEHICLES.

OTHER APPLICABLE ARTICLES: NONE
SUPERSEDES: 00-1-5
WARRANTY STATUS: INFORMATION ONLY

NOTE: The information in Technical Service Bulletins is intended for use by trained, professional technicians with the knowledge, tools, and equipment to do the job properly and safely. It informs these technicians of conditions that may occur on some vehicles, or provides information that could assist in proper vehicle service. The procedures should not be performed by "do-it-yourselfers". Do not assume that a condition described affects your car or truck. Contact a Ford, Lincoln, or Mercury dealership to determine whether the Bulletin applies to your vehicle.

Disclaimer

Technical Service Bulletin # **96249** Date: **961118**

A/T Torque Converter - Leak Test Procedure

Article No.
96-24-9

11/18/96

TORQUE CONVERTER - LEAK TEST PROCEDURE - SERVICE TIP

FORD:
1984-94 TEMPO
1984-97 CROWN VICTORIA, ESCORT, MUSTANG, THUNDERBIRD
1986-97 TAURUS
1988-93 FESTIVA
1989-97 PROBE
1994-97 ASPIRE
1995-97 CONTOUR

LINCOLN-MERCURY:
1984-92 MARK VII
1984-94 TOPAZ
1984-97 CONTINENTAL, COUGAR, GRAND MARQUIS, TOWN CAR
1986-97 SABLE
1991-94 CAPRI
1991-97 TRACER
1993-97 MARK VIII
1995-97 MYSTIQUE

LIGHT TRUCK:
1984-90 BRONCO II
1984-96 BRONCO
1984-97 ECONOLINE, F-150-350 SERIES, RANGER
1986-97 AEROSTAR
1988-97 F SUPER DUTY
1991-97 EXPLORER
1993-97 VILLAGER
1995-97 WINDSTAR
1997 EXPEDITION, MOUNTAINEER

ISSUE:

1993 Ford Probe L4-121 2.0L DOHC VIN A MFI

A new torque converter leak test tool has been released. The current leak test tool has been discontinued by the manufacturer. The new tool will be available to all dealers in 1997.

ACTION:
When using the new leak test tool, a new procedure must be followed. Refer to the following Service Procedure and/or the 1997 Service/Workshop Manuals when using the new leak test tool.

NEW TOOL NUMBER

Description	Tool Number
Torque converter Leak Test Tool and Gasket	014-R1075

SERVICE PROCEDURE

1. Clean the outside surface of the torque converter.

CAUTION:
BE CAREFUL NOT TO DAMAGE THE CONVERTER HUB FINISH WHEN INSTALLING THE TOOL.

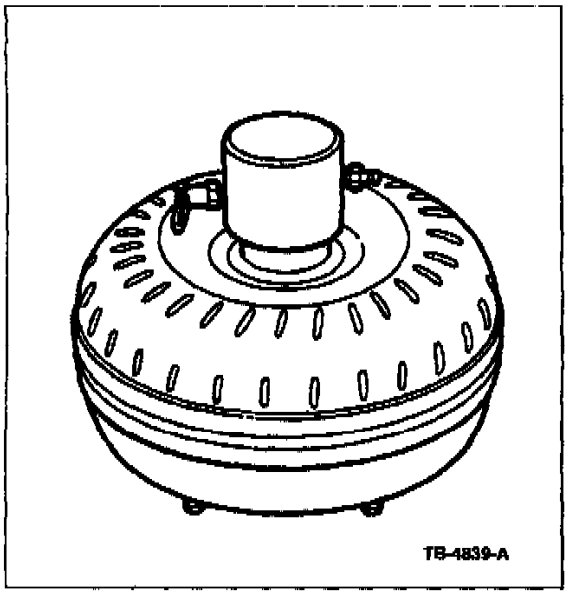

Figure 1

2. Install the Torque Converter Leak Test Tool and Gasket (O14-R1075) into the converter hub. Figure 1.

WARNING:
ALWAYS USE PROPER SAFETY PROCEDURES WHILE USING PRESS.

CAUTION:
DO NOT DAMAGE THE CONVERTER BY APPLYING EXCESSIVE FORCE FROM THE PRESS. USE ONLY ENOUGH FORCE TO SEAL TOOL INTO THE CONVERTER.

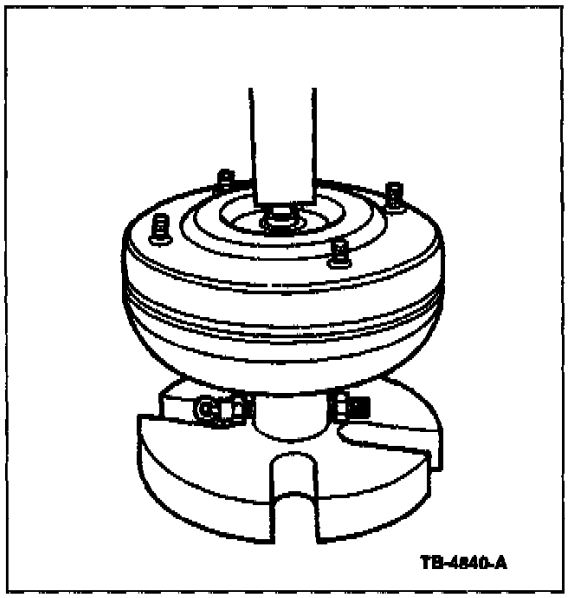

Figure 2

3. Place the torque converter with the tool installed into press and apply enough force to seal tool into the converter. Figure 2.

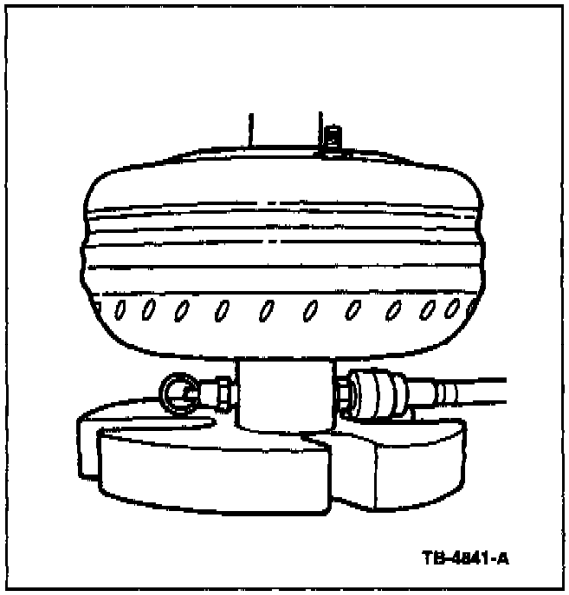

Figure 3

4. Using clean, dry shop air only, apply air pressure of 552 kPa (80 psi) maximum to the valve on the tool. Refer to Figure 3.

5. With air pressure applied to the valve, inspect for any air leaks at the studs, seams and pilot hub. A soap bubble solution may be applied around those areas to aid in diagnosis. If any leaks are present, replace the converter.

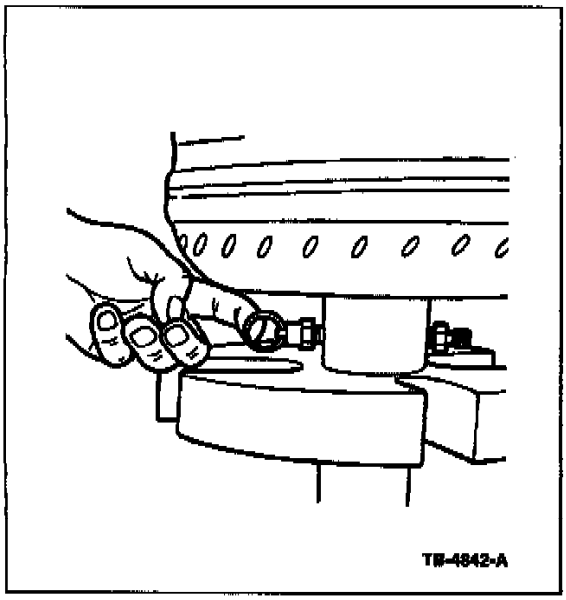

Figure 4

6. Disconnect the air line and release the air pressure from the tool by pulling on the release ring and then slowly releasing the press. Refer to Figure 4.

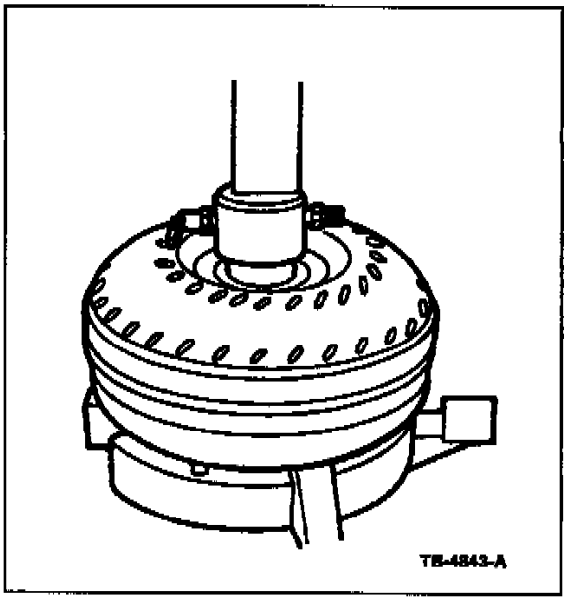

Figure 5

7. Turn the torque converter and tool upside down and reinstall into the press. Repeat Steps 2-6 to check for leaks on the opposite side. Refer to Figure 5.

OTHER APPLICABLE ARTICLES: NONE

WARRANTY STATUS: INFORMATION ONLY

OASIS CODES: 501000, 502000, 504000, 510000

Technical Service Bulletin # **98-9-9** Date: **980511**

Fuel Injectors - Non Warranty Reimbursement Testing

Article No.
98-9-9

05/11/98

FUEL INJECTORS - NON-WARRANTY
REIMBURSEMENT TESTING INFORMATION

FORD:
1992-94 TEMPO

1993 Ford Probe L4-121 2.0L DOHC VIN A MFI

1992-97 PROBE, THUNDERBIRD
1992-98 CROWN VICTORIA, ESCORT, MUSTANG, TAURUS

LINCOLN-MERCURY:
1992-94 TOPAZ
1992-97 COUGAR
1992-98 CONTINENTAL, GRAND MARQUIS, SABLE, TOWN CAR, TRACER
1993-98 MARK VIII
1999 COUGAR

LIGHT TRUCK:
1992-96 BRONCO
1992-97 AEROSTAR
1992-98 ECONOLINE, F-150, F-250 LD, RANGER, SUPER DUTY F SERIES
1993-98 EXPLORER
1997-98 EXPEDITION, MOUNTAINEER
1998 NAVIGATOR

ISSUE
In-vehicle testing of multi-port fuel injectors, using Rotunda Fuel Injector Tester 164-R3750, will no longer be warranty reimbursable. Lack of tester updates and improvements in the design of fuel injectors has led to the discontinuation of this Service Procedure. A significant number of warranty returned injectors test within engineering specification. All diagnostic tools and procedures are being re-evaluated for effectiveness.

ACTION
Acceptable fuel injector tests include: Service Bay Diagnostic System (SBDS) relative injector flow, fuel pressure decay, cylinder drop/balance techniques, and misfire detection tools. Using the acceptable fuel injector tests eliminates the possibility of a misdiagnosed fuel injector concern due to inaccuracy of this test equipment. Since the introduction of Deposit Resistant Injectors in 1991, lean fuel conditions caused by deposit formation have been eliminated. Diagnostic concentration is on single fuel injector inoperative concerns in a particular cylinder.

NOTE
CLEANING OF FUEL INJECTORS IS NOT WARRANTY REIMBURSABLE EXCEPT FOR THE

FOLLOWING VEHICLES:

^ 1992-96 AEROSTAR 4.0L

^ 1992 EXPLORER 4.OL

^ 1992 RANGER 4.OL

OTHER APPLICABLE ARTICLES: NONE

WARRANTY STATUS: INFORMATION ONLY

OASIS CODES: 404000, 490000 Technical Service Bulletin # **92249** Date: **921118**

A/T - Harsh 3rd - 2nd Gear Downshift From 40 - 55 MPH

Article No.
92-24-9

11/18/92

TRANSMISSION - 4EAT - HARSH 3-2 DOWNSHIFTS FROM 40 TO 55 M.P.H. (64-88 KM/H) - VEHICLES WITH 2.0L ENGINE BUILT AFTER 4/16/92

FORD:
1993 PROBE

ISSUE:
A harsh 2-3 downshift may be experienced on vehicles equipped with the 2.0L engine at speeds of 40-55 M.P.H. (64-88 KM/H). The speed at which the concern may appear changes based on the load and throttle position.

ACTION:
Replace the Powertrain Control Module (PCM) with a revised (PCM), now available, which provides smoother 2-3 downshifts. Refer to Section 03-04A-25 of the 1993 Probe Service Manual for service details.

1993 Ford Probe L4-121 2.0L DOHC VIN A MFI

PART NUMBER	PART NAME	CLASS
F32Z-12A650-G	Powertrain Control Module (49 States)	B
F32Z-12A650-H	Powertrain Control Module (California)	W

Part Number/Name Chart

OTHER APPLICABLE ARTICLES:
NONE

WARRANTY STATUS:
Eligible Under Bumper To Bumper Warranty Coverage

OPERATION	DESCRIPTION	TIME
922409A	Replace - Powertrain Control Module (PCM) Includes road Test	0.5 Hr

DEALER CODING

BASIC PART NO.	CONDITION CODE
DRIVE	42

OASIS CODES:
502000

Technical Service Bulletin # **93236** Date: **931110**

EGO Sensors - Silicone Contamination

Article No.
93-23-6

11/10/93

^ EGO SENSORS - SILICONE CONTAMINATION

^ ENGINE - SEALANTS, LOW VOLATILITY SILICONE REQUIRED

^ EXHAUST SYSTEM - SILICONE CONTAMINATION OF EXHAUST GAS OXYGEN (EGO) SENSORS

FORD:
1984-86 LTD
1984-88 EXP
1984-94 CROWN VICTORIA, ESCORT, MUSTANG, TEMPO, THUNDERBIRD
1986-94 TAURUS
1988-93 FESTIVA
1989-94 PROBE
1994 ASPIRE

LINCOLN-MERCURY:
1984-86 CAPRI, MARQUIS
1984-87 LYNX
1984-92 MARK VII
1984-94 CONTINENTAL, COUGAR, GRAND MARQUIS, TOPAZ, TOWN CAR
1986-94 SABLE
1988-89 TRACER
1991-94 CAPRI, TRACER
1993-94 MARK VIII

MERKUR:
1985-89 XR4TI
1988-89 SCORPIO

LIGHT TRUCK:
1983-94 RANGER
1984-90 BRONCO II
1984-94 BRONCO, ECONOLINE, F-150-350 SERIES
1986-94 AEROSTAR
1988-94 F-47, F-53

1993 Ford Probe L4-121 2.0L DOHC VIN A MFI

1991-94 EXPLORER
1993-94 VILLAGER

This TSB article is being republished in its entirety to update model applicability and to revise the part number of the Low Volatility Sealant.

ISSUE:
EGO sensors can be contaminated if volatile types of silicone are used when servicing the engine. Volatile silicones can migrate throughout the system during the first one hundred hours of service. They are commonly found in liquid "silicone rubber" sealants and gasket material. These products are commonly sold in tubes and caulking-type cartridges.

ACTION:
When service is performed on the engine, only use new low volatility silicone sealant (F1AZ-19662-A) where specified. Also replace the contaminated EGO sensor if required.

CAUTION:
DO NOT SUBSTITUTE CONVENTIONAL SILICONE RUBBER SEALANTS WHEN LOW VOLATILITY SILICONE SEALANT IS SPECIFIED.

PART NUMBER	PART NAME	CLASS
F1AZ-19662-A	Low Volatility RTV Sealant	B

OTHER APPLICABLE ARTICLES: NONE
SUPERSEDES: 89-14-5
WARRANTY STATUS: INFORMATION ONLY
OASIS CODES: 403000, 490000, 499000

Technical Service Bulletin # **96225** Date: **961021**

Mass Air Flow Sensor - Assembly Replacement

Article No.
96-22-5

10/21/96

MASS AIR FLOW SENSOR - REPLACEMENT AS AN ASSEMBLY - SERVICE TIP

FORD:
1992-94 TEMPO
1992-97 CROWN VICTORIA, ESCORT, MUSTANG, PROBE, TAURUS, THUNDERBIRD
1994-97 ASPIRE
1995-97 CONTOUR

LINCOLN-MERCURY:
1991-94 CAPRI
1992-94 TOPAZ
1992-97 CONTINENTAL, COUGAR, GRAND MARQUIS, SABLE, TOWN CAR, TRACER
1993-97 MARK VIII
1995-97 MYSTIQUE

LIGHT TRUCK:
1992-97 AEROSTAR, EXPLORER, RANGER
1993-97 VILLAGER
1994-96 BRONCO
1994-97 ECONOLINE
1995-97 F-150, WINDSTAR
1997 EXPEDITION, MOUNTAINEER

ISSUE:
The Mass Air Flow (MAF) sensor is not designed to be removed from its body (die-cast or plastic) for servicing. The sensing elements located inside the by-pass tube can be damaged by poking/probing/touching.

ACTION:

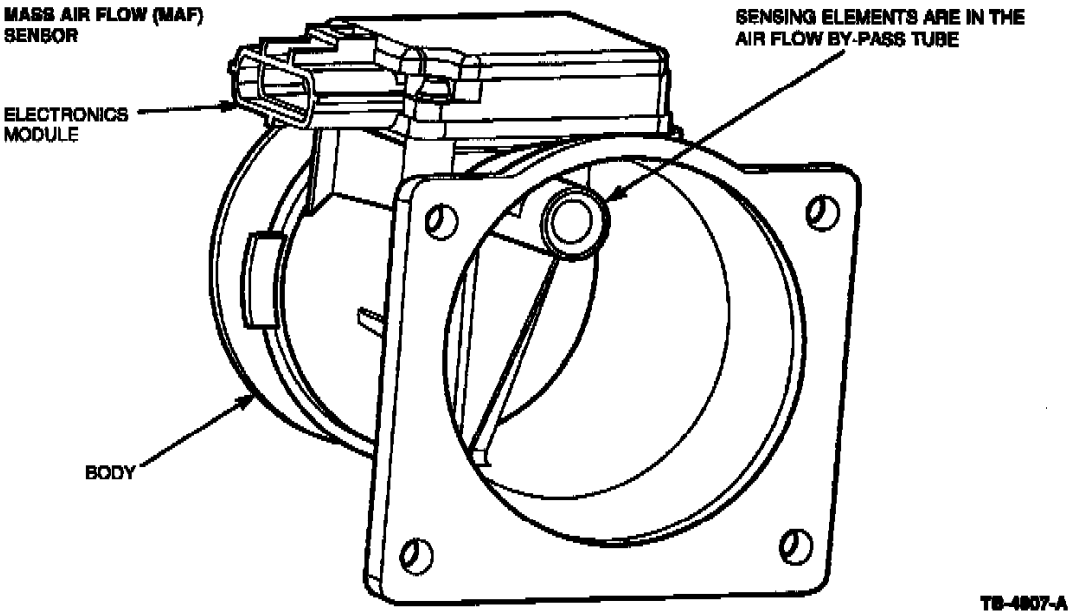

Figure 1

Service the MAF sensor as an assembly (refer to Figure 1).

WARNING:
DO NOT DISASSEMBLE THE MAF SENSOR.

OTHER APPLICABLE ARTICLES: NONE

WARRANTY STATUS: INFORMATION ONLY

OASIS CODES: 203000, 204000, 206000, 607000, 610000, 610500, 611000, 611500, 614000, 614500, 698298

Technical Service Bulletin # **9733** Date: **970203**

MAF Sensor - MIL ON/DTC's Set/Driveability Concerns

Article No.
97-3-3

02/03/97

^ HESITATION - HESITATION ON ACCELERATION - REDUCED POWER - ROUGH IDLE - DIAGNOSTIC TROUBLE CODE (DTC) 181 OR P0171 MAY BE STORED IN MEMORY - VEHICLES BUILT THROUGH 11/19/95

^ MALFUNCTION INDICATOR LAMP (MIL) - DIAGNOSTIC TROUBLE CODE (DTC) 181 OR P0171 MAY BE STORED IN MEMORY - ROUGH IDLE - REDUCED POWER - HESITATION ON ACCELERATION - VEHICLES BUILT THROUGH 11/19/95

^ REDUCED POWER - HESITATION ON ACCELERATION - ROUGH IDLE - DIAGNOSTIC TROUBLE CODE (DTC) 181 OR P0171 MAY BE STORED IN MEMORY - VEHICLES BUILT THROUGH 11/19/95

^ ROUGH IDLE - REDUCED POWER - HESITATION ON ACCELERATION - DIAGNOSTIC TROUBLE CODE (DTC) 181 OR P0171 MAY BE STORED IN MEMORY - VEHICLES BUILT THROUGH 11/19/95

^ LAMP - MALFUNCTION INDICATOR LAMP (MIL) - DIAGNOSTIC TROUBLE CODE (DTC) 181 OR P0171 MAY BE STORED IN MEMORY - ROUGH IDLE - REDUCED POWER - HESITATION ON ACCELERATION - VEHICLES BUILT THROUGH 11/19/95

FORD:
1993-96 PROBE

ISSUE:
A hesitation on acceleration, reduced power, rough idle and/or a Malfunction Indicator Lamp (MIL) illumination with Diagnostic Trouble Code (DTC) 181 (1993-95 Probe) or P0171 (1996 Probe) may be evident on some vehicles. This may be caused by the Mass Air Flow (MAF) sensor.

ACTION:
Replace the MAF sensor with a revised MAF sensor. The revised MAF sensor should reduce the possibility of these concerns. Refer to the following Service Procedure for details.

SERVICE PROCEDURE

1993 Ford Probe L4-121 2.0L DOHC VIN A MFI

1. Check the vehicle for vacuum leaks and repair as required.

2. Verify the vehicle has the proper Positive Crankcase Ventilation (PCV) valve installed.

3. Run an EEC self test, record any DTCs and repair as required. If the concern is still present, proceed to the next Step.

4. Check the vehicle's fuel pressure. Refer to the appropriate year Probe Service Manual, Section 9B for details.

5. Check the MAF sensor voltage in Park or Neutral at 5,500 rpms using New Generation Star (NGS) Tester, Service Bay Diagnostic System (SBDS) or a breakout box. If voltage is less than 2.3 volts, proceed to the next Step.

6. Inspect the MAF sensor build date. If the sensor was built before 5K05 (1st digit = year, 2nd digit = month (A = January, B = February, etc.), 3rd and 4th digits = day of month), replace the sensor with a new sensor.

7. Clear all DTCs and rerun self test to verify repair.

PART NUMBER	PART NAME
F32Z-12B579-B	Mass Air Flow (MAF) Sensor (1993-95 Probe)
F62Z-12B579-CA	Mass Air Flow (MAF) Sensor (1996 Probe)

OTHER APPLICABLE ARTICLES: NONE

WARRANTY STATUS: Eligible Under The Provisions Of Bumper To Bumper Warranty Coverage And Emission Warranty Coverage

OPERATION	DESCRIPTION	TIME
970303A	Replace Mass Air Flow (MAF) Sensor	0.3 Hr.

DEALER CODING

BASIC PART NO.	CONDITION CODE
12B579	42

OASIS CODES: 206000, 607000, 607400, 607700, 608000, 608400, 610000, 610600, 611000, 611500, 614000, 614500, 616000, 698298

Technical Service Bulletin # **98-23-10** Date: **981123**

Engine - Lean Driveability Symptoms

Article No.
98-23-10

11/23/98

MASS AIR FLOW (MAF) - SENSOR
CONTAMINATION - SERVICE TIP

FORD:
1990-97 THUNDERBIRD
1990-99 MUSTANG, TAURUS SHO
1991-99 CROWN VICTORIA, ESCORT, TAURUS
1992-94 TEMPO
1993-97 PROBE
1995-99 CONTOUR

LINCOLN-MERCURY:
1990-97 COUGAR
1991-99 CONTINENTAL, GRAND MARQUIS, SABLE, TOWN CAR, TRACER
1992-94 TOPAZ
1993-98 MARK VIII
1995-99 MYSTIQUE

LIGHT TRUCK:
1990 BRONCO II
1990-97 AEROSTAR
1990-99 RANGER
1991-99 EXPLORER
1994-96 BRONCO

1993 Ford Probe L4-121 2.0L DOHC VIN A MFI

1994-97 F SUPER DUTY, F-250 HD
1994-99 ECONOLINE, F-150, F-250 LD, F-350
1995-99 WINDSTAR
1997-99 EXPEDITION, MOUNTAINEER
1998-99 NAVIGATOR
1999 F-250 HD, SUPER DUTY F SERIES

ISSUE
This TSB article is a diagnostic procedure to address vehicles that exhibit lean driveability symptoms and may or may not have any Diagnostic Trouble Codes (DTCs) stored in memory.

ACTION
Follow the diagnostic procedures described in the following Service Tip. The revised diagnostic procedure is a more accurate means of diagnosing the symptoms.

SERVICE TIP

MASS AIR FLOW (MAF) DISCUSSION

MAF sensors can get contaminated from a variety of sources: dirt, oil, silicon, spider webs, potting compound from the sensor itself, etc. When a MAF sensor gets contaminated, it skews the transfer function such that the sensor over-estimates air flow at idle (causes the fuel system to go rich) and under-estimates air flow at high air flows (causes fuel system to go lean). This means Long Term Fuel Trims will learn lean (negative) corrections at idle and learn rich (positive) corrections at higher air flows.

If vehicle is driven at Wide Open Throttle (WOT) or high loads, the fuel system normally goes open loop rich to provide maximum power. If the MAF sensor is contaminated, the fuel system will actually be lean because of under-estimated air flow. During open loop fuel operation, the vehicle applies Long Term Fuel Trim corrections that have been learned during closed loop operation. These corrections are often lean corrections learned at lower air flows. This combination of under-estimated air flow and lean fuel trim corrections can result in spark knock/detonation and lack of power concerns at WOT and high loads.

One of the indicators for diagnosing this condition is barometric pressure. Barometric pressure (BARO) is inferred by the Powertrain Control Module (PCM) software at part throttle and WOT (there is no actual BARO sensor on MAF-equipped vehicles, except for the 3.8L Supercharged engine). At high air flows, a contaminated MAF sensor will under-estimate air flow coming into the engine, hence the PCM infers that the vehicle is operating at a higher altitude. The BARO reading is stored in Keep Alive Memory (KAM) after it is updated. Other indicators are Long Term Fuel Trim and MAF voltage at idle.

NOTE
THE FOLLOWING PROCEDURE MAY ALSO BE USED TO DIAGNOSE VEHICLES THAT DO NOT HAVE FUEL SYSTEM/HO2S SENSOR DTCS.

Symptoms

^ Lack of Power

^ Spark Knock/Detonation

^ Buck/Jerk

^ Hesitation/Surge on Acceleration

^ Malfunction Indicator Lamp (MIL) Illuminated -

DTCs P0171, P0172, P0174, P0175 may be stored in memory

OBDII DTCs

^ P0171, P0174 (Fuel system lean, Bank 1 or 2)

^ P0172, P0175, (Fuel system rich, Bank 1 or 2)

^ P1130, P1131, P1132, (HO2S11 lack of switching, Bank 1)

^ P1150, P1151, P1152, (HO2S21 lack of switching, Bank 2)

OBDI DTCs

^ 181, 189 (Fuel system lean, Bank 1 or 2)

^ 179, 188 (Fuel system rich, Bank 1 or 2)

^ 171, 172, 173 (HO2S11 lack of switching, Bank 1)

^ 175, 176, 177 (HO2S21 lack of switching, Bank 2)

^ 184, 185 (MAF higher/lower than expected)

^ 186, 187 (Injector pulse width higher/lower than expected)

NOTE:
DO NOT DISCONNECT THE BATTERY. IT WILL ERASE KEEP ALIVE MEMORY AND RESET LONG TERM FUEL TRIM AND BARO TO THEIR STARTING/BASE VALUES. THE BARO PARAMETER IDENTIFICATION DISPLAY (PID) IS USED FOR THIS DIAGNOSTIC PROCEDURE. ALL OBDII APPLICATIONS HAVE THIS PID AVAILABLE. THERE ARE SOME OBDI VEHICLES THAT DO NOT HAVE THE BARO PID, FOR THESE VEHICLES OMIT THE BARO CHECK AND REFER ONLY TO STEPS 2, 3, AND 4 IN THE DIAGNOSTIC PROCEDURE.

BAROMETRIC PRESSURE REFERENCE			
Barometric Pressure (in. Hg.)	Barometric Pressure (kPa)	BARO/MAP PID (Hz)	Altitude above sea level (ft)
3.5	11.8	89.3	
5	16.9	92.8	
10	33.8	104.6	
15	50.7	117.0	14,000
20	67.5	129.6	10,000
21	70.9	132.5	9,000
22	74.3	135.4	8,000
23	77.7	138.3	7,000
24	81.1	141.1	6,000
25	84.4	144.0	5,000
26	87.8	146.9	4,000
27	91.2	149.8	3,000
28	94.6	152.8	2,000
29	97.9	155.8	1,000
30	101.3	158.9	0 (sea level)
31	104.7	162.0	
31.875	107.7	164.7	

1. Look at the BARO PID. Refer to the Barometric Pressure Reference Chart in this article. At sea level, BARO should read about 159 Hz (29.91 in. Hg). As a reference, Denver, Colorado at 1524 meters (5000 ft.) altitude should be about 144 Hz (24.88 in.Hg). Normal learned BARO variability is up to +/- 6 Hz (+/- 2 in. Hg.). If BARO indicates a higher altitude than you are not at (7 or more Hz lower than expected), you may have MAF contamination. If available, Service Bay Diagnostic System (SBDS) has a Manifold Absolute Pressure (MAP) sensor that can be used as a barometric pressure reference. Use "MAP/BARO" test under "Powertrain," "Testers and Meters." Ignore the hookup screen. Connect GP2 to the reference MAP on the following screen.

NOTE
REMEMBER THAT MOST WEATHER SERVICES REPORT A LOCAL BAROMETRIC PRESSURE THAT HAS BEEN CORRECTED TO SEA LEVEL. THE BARO PID, ON THE OTHER HAND, REPORTS THE ACTUAL BAROMETRIC PRESSURE FOR THE ALTITUDE THE VEHICLE IS BEING OPERATED IN. LOCAL WEATHER CONDITIONS (HIGH AND LOW PRESSURE AREAS) WILL CHANGE THE LOCAL BAROMETRIC PRESSURE BY SEVERAL INCHES OF MERCURY (+/- 3 Hz, +/- 1 in. Hg.).

NOTE
BARO IS UPDATED ONLY WHEN THE VEHICLE IS AT HIGH THROTTLE OPENINGS. THEREFORE, A VEHICLE WHICH IS DRIVEN DOWN FROM A HIGHER ALTITUDE MAY NOT HAVE HAD AN OPPORTUNITY TO UPDATE THE BARO VALUE IN KAM. IF YOU ARE NOT CONFIDENT THAT BARO HAS BEEN UPDATED, PERFORM THREE OR FOUR HEAVY, SUSTAINED ACCELERATIONS AT GREATER THAN HALF-THROTTLE TO ALLOW BARO TO UPDATE.

2. On a fully warmed up engine, look at Long Term Fuel Trim at idle, in Neutral, A/C off, (LONGFT1 and/or LONGFT2 PIDs). If it is more negative than -12%, the fuel system has learned lean corrections which may be due to the MAF sensor over-estimating air flow at idle. Note that both Banks 1 and 2 will exhibit negative corrections for 2-bank system. If only one bank of a 2-bank system has negative corrections, the MAF sensor is probably not contaminated.

3. On a fully warmed up engine, look at MAF voltage at idle, in Neutral, A/C off (MAF V PID). If it's 30% greater than the nominal MAF V voltage listed in the Powertrain Control/Emissions Diagnosis (PC/ED) Diagnostic Value Reference Charts for your vehicle, or greater than 1.1 volts as a rough guide, the MAF sensor is over-estimating air flow at idle.

4. If at least tow of the previous three steps are true, proceed to disconnect the MAF sensor connector. This puts the vehicle into Failure Mode and Effects Management (FMEM). In FMEM mode, air flow is inferred by using rpm and throttle position instead of reading the MAF sensor. (In addition, the BARO value is reset to a base/unlearned value.) If the lean driveability symptoms go away, the MAF sensor is probably contaminated and should be replaced. If the lean driveability symptoms do not go away, go to the PC/ED Service Manual for the appropriate diagnostics.

NOTE

1993 Ford Probe L4-121 2.0L DOHC VIN A MFI

DUE TO INCREASINGLY STRINGENT EMISSION/OBDII REQUIREMENTS, IT IS POSSIBLE FOR SOME VEHICLES WITH MAF SENSOR CONTAMINATION TO SET FUEL SYSTEM DTCs AND ILLUMINATE THE MIL WITH NO DRIVEABILITY CONCERNS. DISCONNECTING THE MAF ON THESE VEHICLES WILL, THEREFORE, PRODUCE NO IMPROVEMENTS IN DRIVEABILITY. IN THESE CASES, IF THE BARO, LONGFT1, LONGFT2, AND MAF V PIDs INDICATE THAT THE MAF IS CONTAMINATED, PROCEED TO REPLACE THE MAF SENSOR.

After replacing the MAF sensor, disconnect the vehicle battery (5 minutes, minimum to reset KAM, or on newer vehicles, use the "KAM Reset" feature on the New Generation Star (NGS) Tester and verify that the lean driveability symptoms are gone.

OTHER APPLICABLE ARTICLES:: NONE
WARRANTY STATUS: INFORMATION ONLY
OASIS CODES: 206000, 610000, 610500, 610600, 610700, 611000, 611500, 612000, 612500, 614000, 614500, 614600, 698298 Technical Service Bulletin # **962516** Date: **961202**

Axle Shafts - Fluid Leaks

Article No.
96-25-16

12/02/96

^ AXLE LEAKS - FLUID LEAKS FROM FRONT OF VEHICLE AT AXLE SHAFTS - NEW DESIGN REPLACEMENT CV JOINT BOOTS

^ AXLE SHAFTS - NEW DESIGN REPLACEMENT CV JOINT BOOTS - SERVICE TIP

FORD:
1988-93 FESTIVA
1989-96 PROBE

LINCOLN-MERCURY:
1988-89 TRACER

ISSUE:
Fluid may be leaking from the outer CV joint boot on some vehicles because of a tear, crack or wear. An alternate design CV replacement boot has been developed to simplify replacement of the CV boot.

APPLICATION CHART		
Model Year	Vehicle	Part Number
1989	Probe w/2.2L w/o Turbo, Built From 1/18/88	E92Z-3K331-A
1989	Probe w/2.2L w/o Turbo, Built Before 1/18/88	E92Z-3K331-B
1989	Probe w/2.2L w/Turbo	E92Z-3K331-C
1993	Probe w/2.5L	E92Z-3K331-C
1993-96	Probe w/2.0L	F32Z-3K331-A
1988-89	Tracer	E7GZ-3K331-A
1988-93	Festiva	E8BZ-3K331-A

ACTION:
For those instances where the shaft and joint do not require removal, use the new alternate design split boot. When the shaft and joint need removal, use either the original design non-split boot or the new alternate design split boot. Refer to the Application Chart for specific part numbers and the Instruction Sheet included with the CV boot for removal and installation procedures.

PART NUMBER	PART NAME
E92Z-3K331-A	CV Boot
E92Z-3K331-B	CV Boot
E92Z-3K331-C	CV Boot
F32Z-3K331-A	CV Boot
E7GZ-3K331-A	CV Boot
E8BZ-3K331-A	CV Boot

OTHER APPLICABLE ARTICLES: NONE

WARRANTY STATUS: Eligible Under The Provisions Of Base Warranty Coverage

1993 Ford Probe L4-121 2.0L DOHC VIN A MFI

OPERATION	DESCRIPTION	TIME
962516AT	Replace Both Outer CV Boots	0.7 Hr.
962516B	Replace One Outer CV Boot	0.4 Hr.

DEALER CODING

BASIC PART NO.	CONDITION CODE
3K331	77

OASIS CODES: 509000, 510000

Technical Service Bulletin # **9319B17** Date: **930929**

Brake Master Cylinder - Service Procedure Revision

Article No.
93-19B-17

09/29/93

SERVICE MANUAL - 1993 - PAGE 06-06-16 - MASTER CYLINDER DISASSEMBLY/ASSEMBLY PROCEDURES REVISED

FORD:
1993 PROBE

ISSUE:
Master Cylinder disassembly and assembly procedures require revision. Page 06-06-16 of the 1993 Probe Service Manual is affected.

DISASSEMBLY AND ASSEMBLY (Continued)

Item	Description
7	Reservoir Mounting Screw
8	Stop Screw and O-Ring
9	Master Cylinder Body
10	Bushings
11	Master Cylinder Reservoir

1. Use Rotunda Digital Volt-Ohmmeter 105-00051 or equivalent to check the continuity of the master cylinder reservoir. The reservoir is full when the switch is open.

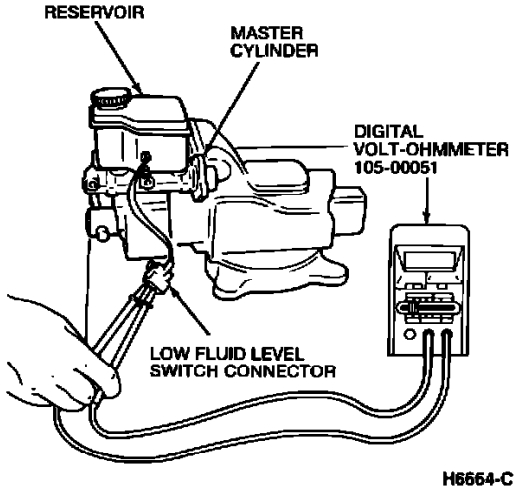

2. Use a screwdriver to push down on the low fluid level sensor float. Use a volt-ohmmeter to check the continuity of the switch. The switch contacts close when the float is pushed down.

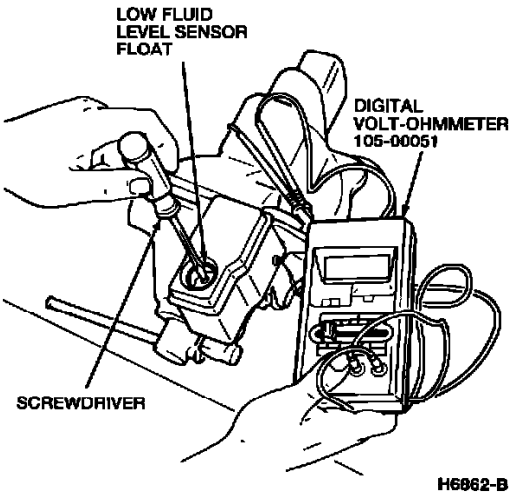

3. If the low fluid level switch is damaged, replace it.
4. Remove the low fluid level sensor.
5. Remove the reservoir mounting screw.
6. Gently pry up on the master cylinder reservoir with a small pry bar and remove it from the master cylinder.
7. Remove the two reservoir bushings from the master cylinder.
8. Use snap ring pliers to remove the master cylinder snap ring. Discard the snap ring.
9. Use a small amount of compressed air to push out the master cylinder pistons. Be careful to catch the pistons in a cardboard box filled with clean shop towels to prevent damage to the pistons. Use only the minimum amount or air pressure needed to drive out the pistons.
10. Remove the stop screw and the secondary piston assembly.

Assembly

1. Lubricate the seals on the secondary piston assembly and install the assembly.
2. Lubricate the seals on the primary piston assembly with brake fluid and install the assembly.

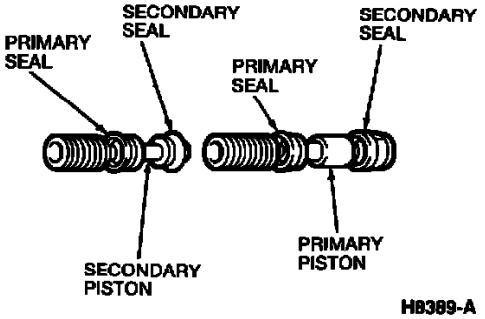

3. Push the secondary piston assembly fully into the bore.
4. Install the stop screw.

Revised 8/93

ACTION:
Refer to the page in this TSB article for the revised information.

OTHER APPLICABLE ARTICLES: NONE
WARRANTY STATUS: INFORMATION ONLY
OASIS CODES: 390000

Technical Service Bulletin # **932410** Date: **931124**

Instrument Cluster Warning Lights - Dimly Lit

Article No.
93-24-10

1993 Ford Probe L4-121 2.0L DOHC VIN A MFI

11/24/93

^ LAMP - MALFUNCTION OF FOUR PIN LOW OIL LEVEL RELAY - VEHICLES BUILT AFTER 8/1/92 OR 1983-1993 VEHICLES THAT HAVE HAD SERVICE REPLACEMENT IGNITION SWITCHES AFTER 8/1/92

^ LAMPS - INSTRUMENT CLUSTER WARNING LIGHTS DIMLY LIT - VEHICLES BUILT AFTER 8/1/92 OR 1983-1993 VEHICLES THAT HAVE HAD SERVICE REPLACEMENT IGNITION SWITCHES AFTER 8/1/92

FORD:
1983 FAIRMONT
1983-89 CROWN VICTORIA, ESCORT
1983-93 MUSTANG, THUNDERBIRD
1983-94 PROBE
1984-86 LTD
1984-94 TEMPO

LINCOLN-MERCURY:
1983 LN7, ZEPHYR
1983-87 CONTINENTAL, LYNX
1983-89 GRAND MARQUIS, TOWN CAR
1983-93 COUGAR
1984-86 CAPRI, MARQUIS
1984-94 TOPAZ

LIGHT TRUCK:
1983-91 BRONCO
1983-93 ECONOLINE, F-150-350 SERIES, RANGER
1986-91 AEROSTAR
1991-93 EXPLORER

ISSUE:
The instrument cluster warning light(s) may be dimly lit or there may be a malfunction of the four pin low oil relay on vehicles so equipped. This could be due to the ignition switch.

ACTION:

PART NUMBER	PART NAME	CLASS
F29Z-11572-D	Ignition Switch (All Cars, 86-91 Aerostar)	B
F2TZ-11572-B	Ignition Switch (91-93 Explorer, 92-93 Ranger)	B
F2UZ-11572-C	Ignition Switch (92-94 Econoline)	B
F2TZ-11572-E	Ignition Switch (83-93 F-Series, 83-91 Bronco, 83-91 Ranger*)	B
F2TZ-11572-F	Ignition Switch (83-91 Econoline, 83-91 Ranger*)	B

(*) The 1983 to 1991 Ranger can use either switch.

If the vehicle displays the subject symptoms and meets the following conditions, replace the ignition switch. Refer to the appropriate Car or Light Truck Service Manual (Section 13-04 for 1983-1990 Cars, Section 11-04 for 1991-1993 Cars and Section 13-05 for 1983-1990 Light Trucks, Section 11-05 for 1991-1993 Light Trucks) for removal and installation procedures. Refer to the Parts Block in this article for correct parts usage.

CONDITIONS

^ The vehicle has 14401 wiring attached to the P2 terminal of the ignition switch. Refer to the wiring schematic and/or Electrical And Vacuum Troubleshooting Manual (EVTM) for the concern vehicle.

IGNITION SWITCH (ENGINEERING) PART NUMBERS	
PASSENGER CAR	LIGHT TRUCK
F29A-11572-DA (All)	F27A-11572-BB (91-93 Explorer, 92-93 Ranger) F2UA-11572-CA (92-94 Econoline) F29A-11572-DA (86-91 Aerostar) F2TA-11572-EA (83-93 F-Series, 83-91 Bronco, 83-91 Ranger*) F2TA-11572-FA (83-91 Econoline, 83-91 Ranger*)

(*) The 1983 to 1991 Ranger can use either switch.

^ The vehicle is equipped with one of the ignition switches identified in the Ignition Switch Part Number Chart.

NOTE:
THE SERVICE PART NUMBERS FOR THE REPLACEMENT IGNITION SWITCHES WILL HAVE THE SAME PART NUMBERS AS THOSE REPLACED. THE NEW SWITCH HAS BEEN IMPROVED TO CORRECT THE SUBJECT ISSUE.

OTHER APPLICABLE ARTICLES: NONE
WARRANTY STATUS:
Eligible Under The Provisions Of The Bumper To Bumper For 1992/93 Models, Basic Warranty Coverage For All Other Models Except Lincolns. Major Component Warranty Coverage For Lincolns

OPERATION	DESCRIPTION	TIME
932410A	Replace Ignition Switch - All Light and Compact Trucks	0.5 Hr.

DEALER CODING

BASIC PART NO.	CONDITION CODE
11572	X1

OASIS CODES: 201000, 201100, 206000

Technical Service Bulletin # **00-17-1** Date: **000821**

Ignition - Hard/No Start, Distributor Stator Replacement

Article NO.
00-17-1

08/21/00

^ HARD/NO START - 1993 PROBE WITH AUTOMATIC TRANSMISSION AND 2.0L ENGINE ONLY - NEW STATOR SERVICE PART RELEASED

^ NO SPARK - 1993 PROBE WITH AUTOMATIC TRANSMISSION AND 2.0L ENGINE ONLY - NEW STATOR SERVICE PART RELEASED

FORD:
1993 PROBE

ISSUE
A hard/no start or stall condition may occur on some vehicles after an engine hot soak event. This may be caused by an open in the distributor stator circuit. A new individual stator has been released for service. Previously the distributor was only serviced as an assembly.

ACTION
Replace stator assembly with a revised stator assembly. Refer to the following Service Procedure for details.

SERVICE PROCEDURE

REMOVAL

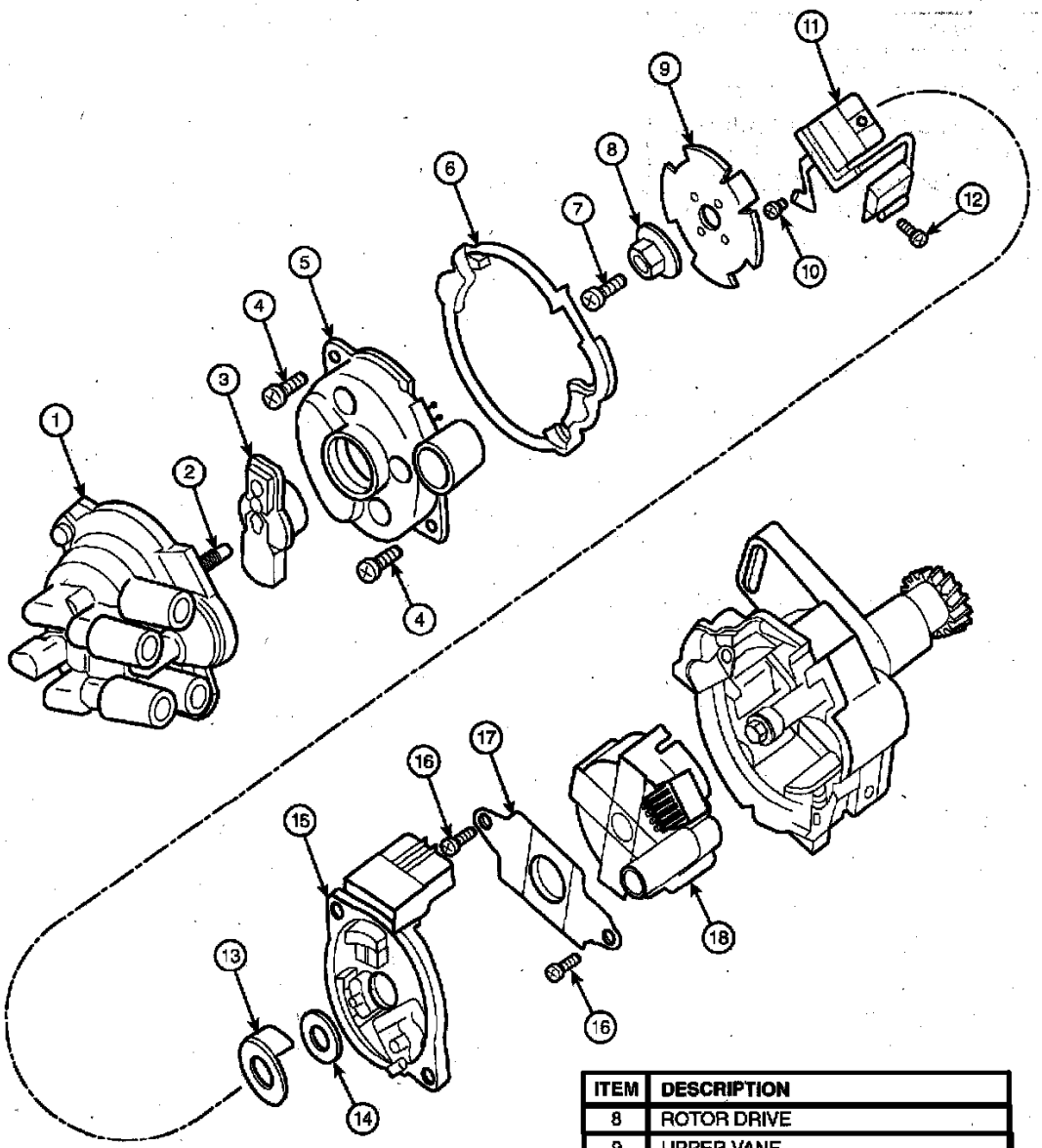

ITEM	DESCRIPTION
1	DISTRIBUTOR CAP ASSEMBLY
2	POINT ASSEMBLY (COIL OUTPUT)
3	ROTOR ASSEMBLY
4	STATOR COVER SCREWS (2)
5	STATOR COVER
6	GASKET
7	ARMATURE CENTER SCREW

ITEM	DESCRIPTION
8	ROTOR DRIVE
9	UPPER VANE
10	IGNITION COIL TERMINAL SCREW
11	IGNITION COIL CONNECTOR
12	IGNITION COIL CONNECTOR SCREW
13	LOWER VANE
14	SPACER
15	STATOR ASSEMBLY
16	RETAINING PLATE SCREWS (2)
17	RETAINING PLATE
18	IGNITION COIL

Figure 1

TB-6112-A

Refer to Figure 1.

1. Remove the engine air cleaner assembly. Refer to the Service Manual, Section 03-12A.

2. Remove the distributor cap, gasket, and rotor.

3. Remove the two (2) stator cover screws and stator cover.

4. Remove the armature shaft center screw and rotor drive.

CAUTION:

MAKE NOTE OF LOCATION OF VANES WHEN REMOVING. THEY WILL NEED TO BE INSTALLED IN THE SAME ORIENTATION.

5. Remove the upper and lower vanes and the spacer from the armature shaft.

6. Remove the condenser screw from the side of the distributor housing and remove the ignition coil terminal screw.

7. Remove and discard the stator assembly.

INSTALLATION

Refer to Figure 1.

1. Install the revised Stator Assembly (F32Z-12A112-AA)

2. Install the ignition coil connector assembly by applying a downward force to the connector. Make certain all three (3) terminals on the ignition coil connector mate properly on the ignition coil.

3. Install screw that attaches the terminal of the ignition coil connector to the stator assembly. Torque screw to 0.6-1.0 N.m (5-10 lb-in).

4. Install screw that attaches the condenser of the ignition coil connector to the distributor housing. Torque screw to 1.6-2.9 N.m (14-26 lb-in).

CAUTION:
CARE MUST BE TAKEN IN ORDER TO ASSURE PROPER ORIENTATION OF THE VANES TO THE ARMATURE SHAFT TO AVOID DAMAGING THE VANES.

5. Install the spacer and vanes onto the armature shaft.

6. Install the rotor drive.

7. Install armature shaft center screw. Torque screw to 4.7-5.1 N.m (41-46 lb-in).

NOTE:
VERIFY ROTATION OF ARMATURE SHAFT TO ASSURE THERE IS NO INTERFERENCE.

8. Install the stator cover and screws Torque screws to 4.7-5.1 N.m (41-46 lb-in).

9. Install distributor gasket, rotor, and cap. Torque distributor cap to 1.0-1.9 N.m (9-17 lb-in).

10. Install engine air cleaner. Refer to the Service Manual, Section 03-12A.

PART NUMBER	PART NAME
F32Z-12A112-AA	Stator Assembly

PART INFORMATION

OTHER APPLICABLE ARTICLES: NONE
WARRANTY STATUS: INFORMATION ONLY
OASIS CODES: 602300, 603300, 607000, 607400, 614000

Technical Service Bulletin # **9324** Date: **930118**

`Star Tester' - Proper Hook Up Procedure

Article No.
93-2-4

01/18/93

NEW GENERATION "STAR TESTER" - PROPER HOOK-UP PROCEDURE TO PREVENT COMPONENT DAMAGE

FORD:
1988-93 FESTIVA
1989-93 PROBE

LINCOLN-MERCURY:
1988-89 TRACER
1991 CAPRI

ISSUE:
Damage to the NGS internal circuit board could be the result of the Star Tester being connected to the TACH test connector instead of the STI connector.

1988 - 1993 MECS VEHICLES
STI vs. TACH TEST CONNECTOR DISTINCTION

VEHICLE	YEAR	ENGINE	TEST CONNECTOR	WIRE COLOR	CONNECTOR COLOR	CONNECTOR LOCATION
TRACER	1988/1989	1.6L EFI	TACH	Y/BL	WHITE	AT IGNITION COIL
			STI	Y	GREEN	LEFT REAR CORNER OF ENGINE COMPARTMENT
FESTIVA	1988/1989	1.3L CARB.	TACH	NONE	NONE	LEFT REAR CORNER OF ENGINE COMPARTMENT
			STI	Y/BL	WHITE	
	1988/1989	1.3L EFI	TACH	Y/GN	BLACK	
			STI	Y/BL	WHITE	
	1990/1993	1.3L EFI	TACH	Y/GN	WHITE	
			STI	Y/GN	BLACK	
CAPRI	1991/1993	1.6L EFI TURBO/ NON TURBO	TACH	Y/BL	WHITE	AT IGNITION COIL
			STI	Y	GREEN	RIGHT REAR OF ENGINE COMPARTMENT
PROBE	1989	2.2L EFI TURBO	TACH	Y/BL	WHITE	LEFT REAR CORNER OF ENGINE COMPARTMENT
			STI	R/W	BLACK	
	1989	2.2L EFI NON TURBO	TACH	NONE	NONE	
			STI	R/W	BLACK	
	1990/1992	2.2L EFI TURBO	TACH	Y	BLACK	LEFT REAR CORNER OF ENGINE COMPARTMENT
			STI	R/W	BLACK	
	1990/1992	2.2L EFI NON TURBO	TACH	Y/BL	BLACK	LEFT REAR CORNER OF ENGINE COMPARTMENT
			STI	R/W	BLACK	

NOTE: For 1991-1993 Escort/Tracer and 1993 Probe, the TACH and STI pins are integrated into a multi pin Data Link Connector (DLC). There are no single pin connectors for the TACH and STI.

TB-2941-A

Figure 1

ACTION:
Connect the NGS properly for testing. Do not connect the NGS STI connector to the vehicle TACH test connector. Refer to the procedure and chart for proper tester connection.

4EAT DIAGNOSTIC CONNECTOR LOCATIONS

1991 - 1993 CAPRI:

^ 4EAT STI and STO connectors are located behind the glove compartment (above and to the right) taped to the wire harness

1990 - 1992 3.0L:

^ 4EAT STI and STO connectors are located under the instrument panel on the left hand side of the steering column near the 4EAT module.

1989 - Probe 2.2L non turbo:

^ 4EAT STI and STO connectors are located under the instrument panel on the left hand side of the steering column near the 4EAT module.

1990 - 1992 Probe 2.2L turbo:

^ 4EAT STI and STO connectors are located under the instrument panel on the left hand side of the steering column near the 4EAT module.

1993 Ford Probe L4-121 2.0L DOHC VIN A MFI

1990 - 1992 Probe 2.2L non turbo:

^ 4EAT module is integrated with the PCM control assembly and shares the same diagnostic connectors which are located on the left hand side of the engine compartment, 1993 Escort/Tracer 1.9L:

^ 4EAT module is integrated with the PCM control assembly and shares the same diagnostic connectors which are located on the left hand side of the engine compartment.

1993 Escort/Tracer 1.8L:

^ 4EAT module is integrated with the PCM control assembly and shares the same diagnostic connectors which are located on the left hand side of the engine compartment.

1991 - 1992 Escort/Tracer 1.9L:

^ 4EAT STO connector is located on the left hand side of the engine compartment, near PCM self test connectors. The STI for 4EAT is always grounded within the TCM.

1991 - 1992 Escort/Tracer 1.8L:

^ 4EAT STI and STO pins are integrated into one diagnostic connector along with the PCM. The connector is located on the left hand side of the engine compartment.

1993 Probe 2.5L:

^ 4EAT STI and STO pins are integrated into a multi pin Data Link Connector, located in the left hand front corner of the engine compartment, near the battery.

1993 Probe 2.0L:

^ 4EAT module is integrated with the PCM control assembly and shares a multi pin Data Link Connector, located in the left hand front corner of the engine compartment, near the battery.

1990 - 1992 Probe 2.2L Turbo/Non Turbo:

1993 Ford Probe L4-121 2.0L DOHC VIN A MFI

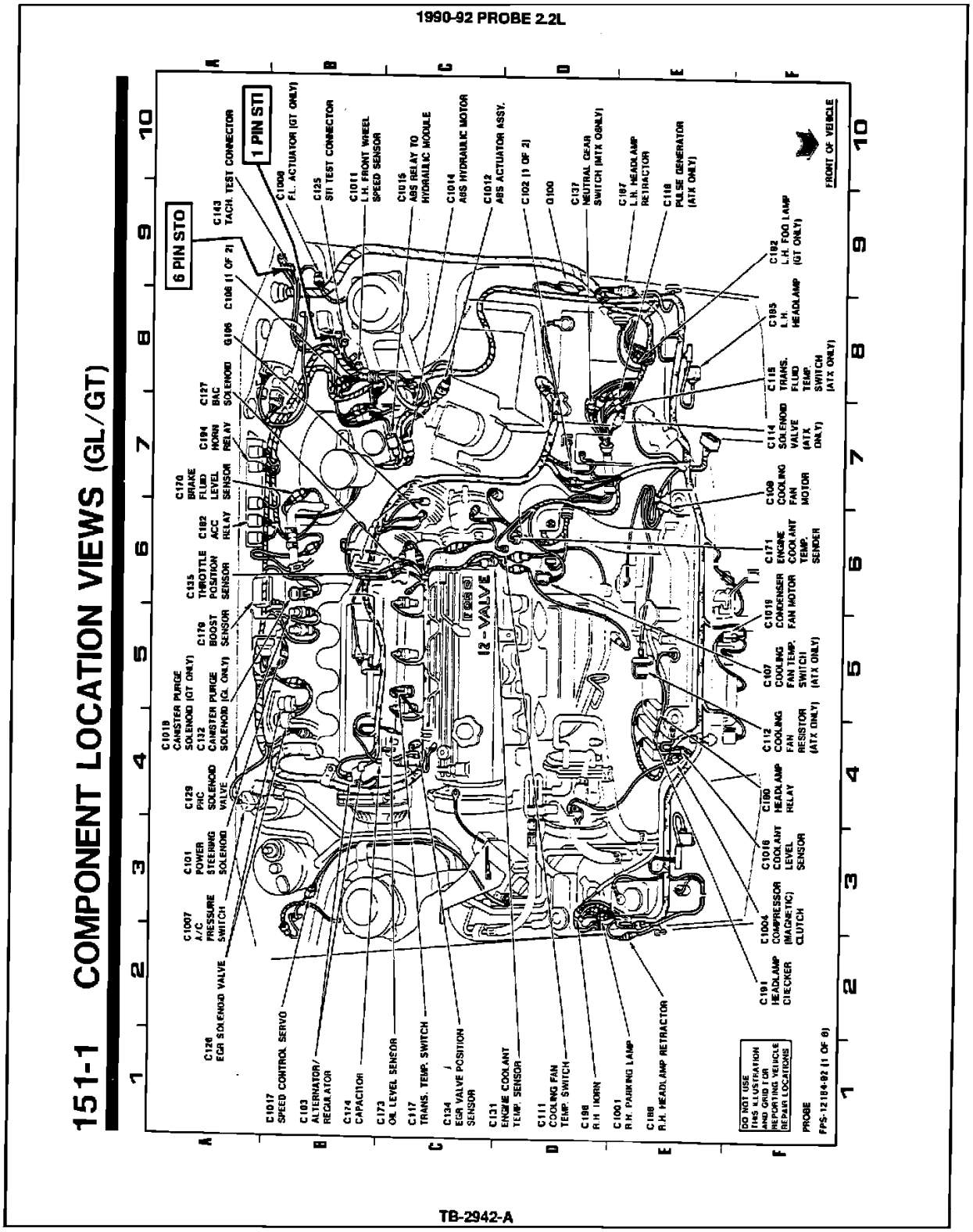

Figure 2

^ For connector locations, refer to Figure 2.

1990 - 1993 Festiva 1.3L:

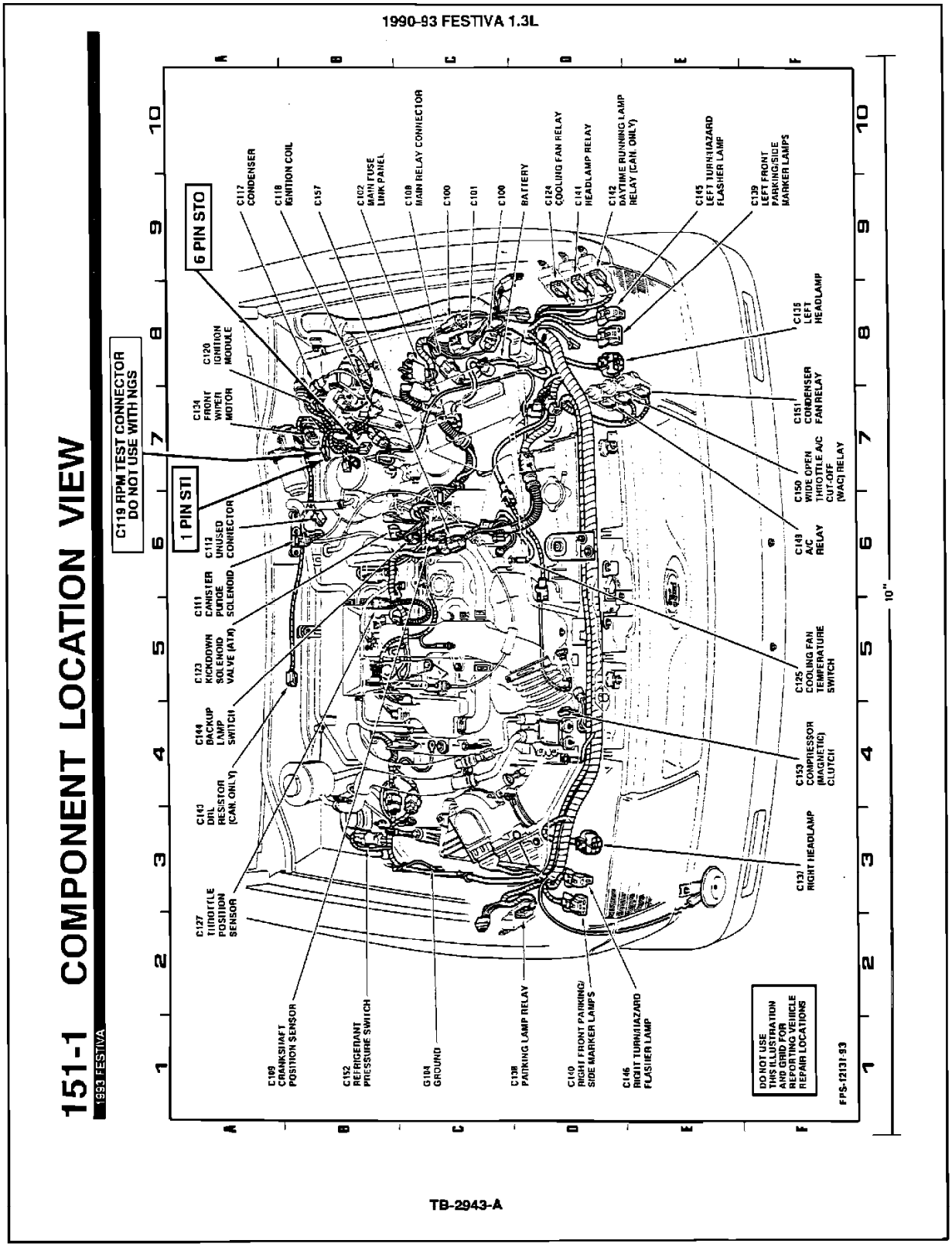

Figure 3

^ For connector locations, refer to Figure 3.

1988 - 1989 Festiva 1.3L:

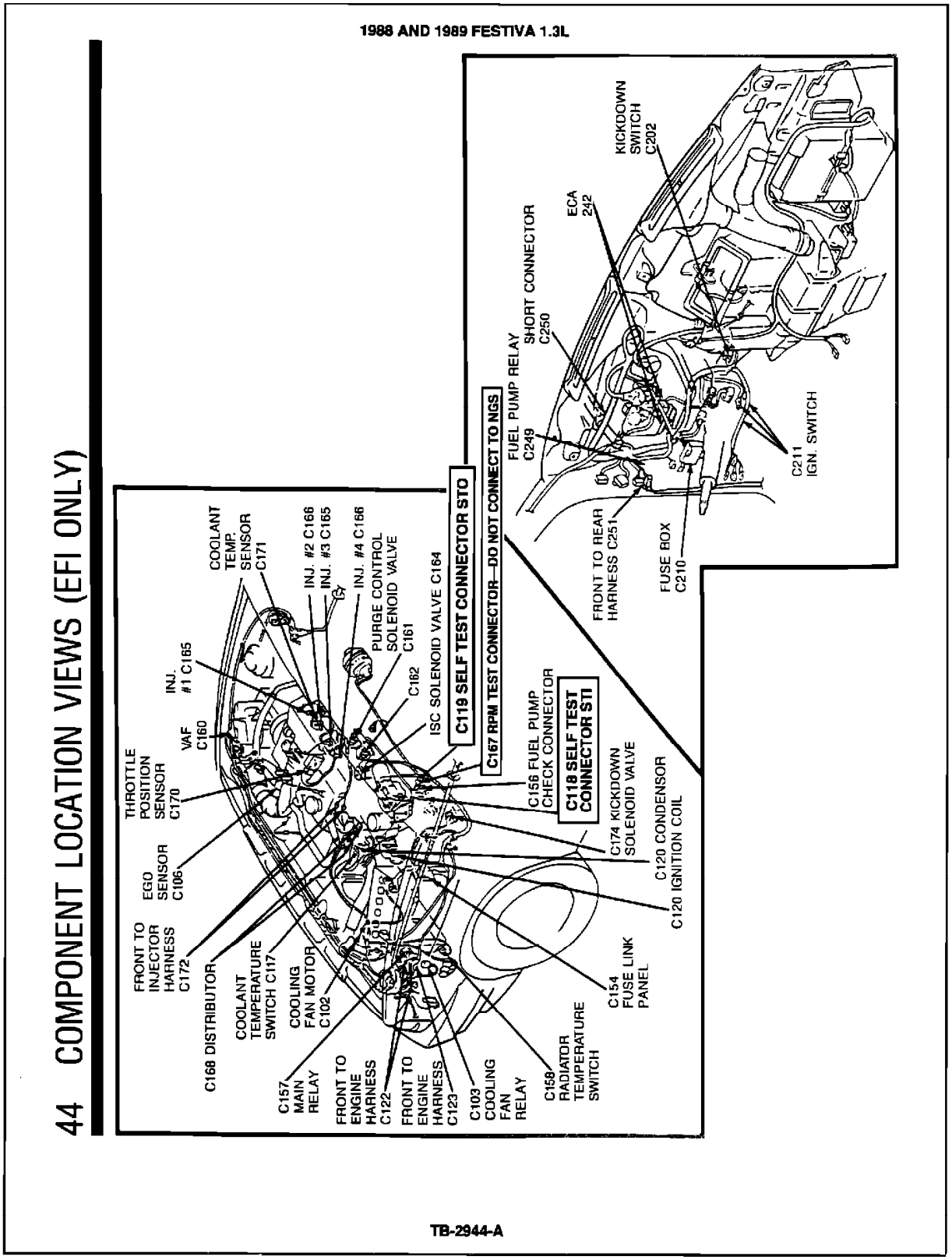

Figure 4

^ For connector locations, refer to Figure 4.

1989 Probe 2.2L Turbo/Non Turbo.

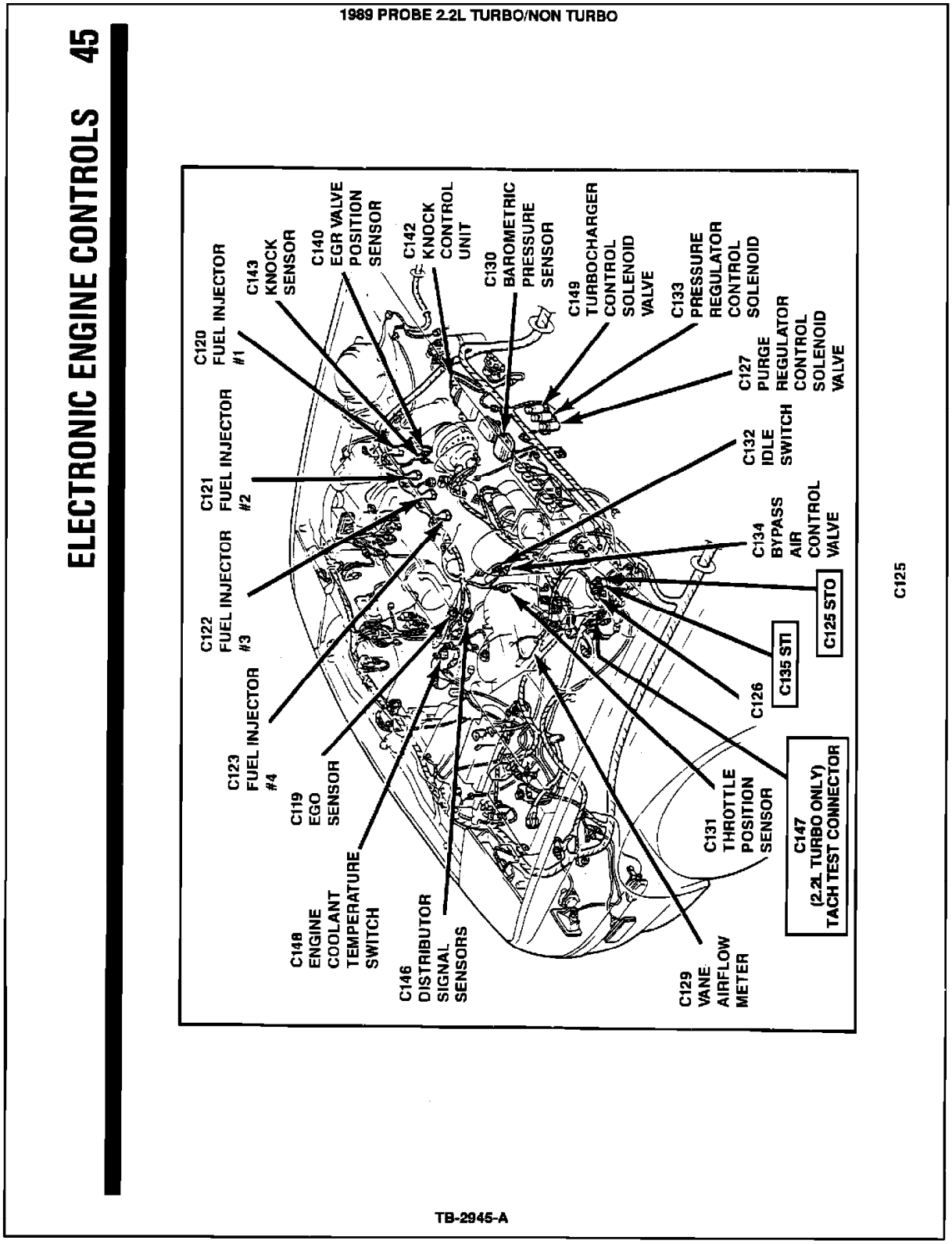

Figure 5

^ For connector location, refer to Figure 5.

OTHER APPLICABLE ARTICLES: NONE
WARRANTY STATUS: INFORMATION ONLY
OASIS CODES: 690000

Technical Service Bulletin # **93B33** Date: **940201**

Overview of Recall 93B33

TO: All Ford Dealers February, 1994

SUBJECT:
Owner Notification Program 93B33 - Certain 1993 Model Year Ford Probes - Replacement of Ignition Coil Wire.

OASIS - Yes

1993 Ford Probe L4-121 2.0L DOHC VIN A MFI

OWNER LIST - Yes
PARTS RETURN - No
PROGRAM TIMING - Affected vehicles are eligible for this program through March 31, 1995, regardless of mileage. (After March 31, 1995, a vehicle is still eligible for this program if it is within the 36 month / 36,000 mile Bumper-to-Bumper warranty).

AFFECTED VEHICLES
Certain 1993 Model Year Ford Probes equipped with 2.0L engines and manual transmissions, produced from April 16, 1992, through February 15, 1993.

REASONS FOR THIS PROGRAM
The ignition coil wire on these vehicles is too short. This condition may cause coil wire damage during engine roll, and possibly cause the ignition coil terminal to fracture. If damage to the ignition coil wire or ignition coil occurs, the vehicle may experience engine stumble, hesitation, rough idle, or engine stall.

SERVICE ACTION
To correct this condition a longer ignition coil wire will be installed. Also, the ignition coil will be visually inspected and, if necessary, replaced.

REFUNDS
Only for owner-paid repairs made before date of Owner Letter.

ATTACHMENTS
Attachment I
- Administrative Information
- Refund Codes

Attachment II
- Labor Allowances
- Parts Ordering Information

Attachment III
- Technical Information

Attachment I - Administrative Information

OASIS
YOU MUST USE OASIS TO DETERMINE IF A VEHICLE IS ELIGIBLE FOR THIS PROGRAM.

PLEASE NOTE
CORRECT ALL VEHICLES IN STOCK BEFORE DELIVERY

PROMPTLY CORRECT
- Affected vehicles on the enclosed list.

- Other eligible vehicles which are brought to your dealership.

DEALER-OWNER CONTACT
Immediately contact any owner whose name is not on the list. Give owner a copy of the Owner Letter. Arrange with the owner for a service date.

FCSD CONTACT
Talk with your FCSD Service Zone Manager about program concerns.

FORM 1863
Enter 1863 claims using DWE (or mail direct)

See Warranty and Policy Manual:

- Section 5.6 - 1/Section 6.1 - 24 (Owner Notification Programs)

OWNER REFUNDS
See Warranty and Policy Manual:

- Section 6.1 - Pages 25 through 26 (Owner Refund)

For owner-paid repairs made before date of Owner Letter:

Submit on separate Form 1863 using the codes shown below:

Program Code Box	- 93B33
Causal Basic Part Number	- 12298
Condition Code	- 08
Labor Operation (1st line)	- REFUND

1993 Ford Probe L4-121 2.0L DOHC VIN A MFI

Labor Operation (2nd line)	-	ALLOW
Administrative Allowance	-	0.2 Hrs.
Customer Concern Code	-	N99

Attachment II - Labor and Parts Information

LABOR ALLOWANCES	HOURS	LABOR OPERATION
Replace Ignition Coil Wire (Includes Inspection of Coil)	0.2 Hrs.	B33A
Replace Ignition Coil and Coil Wire (Includes Inspection of Coil)	0.4 Hrs.	B33B

PARTS REQUIREMENTS

PART NUMBER	DESCRIPTION	CLASS	DEALER PRICE
F32Z-12298-B	Ignition Coil Wire	CG	$10.66
F32Z-12297-K	Separator (Slip Ring)	AG	$2.50
E73Z-12029-A	Coil Assembly (if required)	BG	$23.92

Parts will not be direct shipped for this program. Order your parts requirements through normal order processing channels.

Parts prices current until next issue of Master Price Book. For latest prices, check or call your:

- Order Processing Center
- DOES II
- Updated Price Book

CLAIMS PREPARATIONS

- Use Form 1863
- Enter using DWE (or mail)
- Use code information shown below:

Program Code	- 93B33
Causal Basic Part Number	- 12298
Condition Code	- 08
Labor Operation	- As Appropriate Above
Customer Concern Code	- N99

Attachment III - Technical Instructions

REMOVAL
Remove ignition coil wire. Be sure to note the location where the attaching clip fastens the coil wire to the air cleaner.

INSTALLATION
Insert the coil wire through the slip ring. Install coil wire and attach slip ring to the air cleaner at the location noted above.

NOTE:
IF THROUGH VISUAL INSPECTION OF THE IGNITION COIL, DAMAGE IS FOUND, REPLACE THE IGNITION COIL. REFER TO THE 1993 MODEL YEAR FORD PROBE SHOP MANUAL, SECTION 03-07, FOR THE IGNITION COIL REPLACEMENT PROCEDURE.

Owner Letter

Serial Number 12345678901234567 February, 1994

Mr. John Sample
123 Main Street
Anywhere, USA 12345

Ford Motor Company is providing a no-charge Service Program, Number 93B33, to owners of certain 1993 model year Ford Probes equipped with 2.0L engines and manual transmissions.

REASON FOR THIS PROGRAM
The ignition coil wire on these vehicles may be too short. This condition may cause coil wire damage during engine roll, and possibly cause the

ignition coil terminal to fracture. If damage to the ignition coil wire or ignition coil occurs, your vehicle may experience engine stumble, hesitation, rough idle, or engine stall.

NO CHARGE SERVICE
At no charge to you, your dealer will replace your ignition coil wire. Your dealer will also inspect your ignition coil and, if necessary replace it.

Affected vehicles are eligible for this program through March 31, 1995, regardless of mileage. (After March 31, 1995, a vehicle is still eligible for this program if it is within the 36 month / 36,000 mile Bumper-to-Bumper warranty).

HOW LONG WILL IT TAKE?
The time needed for this service is about one (1) hour. However, due to service scheduling times, your dealer may need your car for one full working day.

CALL YOUR DEALER
Ask for a service date and if parts are in stock.

If your dealer does not have the parts in stock, they can be ordered before scheduling your service date. Parts would be expected to arrive within a week.

When you bring your car in, give the dealer this letter. If you misplace this letter, your dealer will still do the work, free of charge.

REFUNDS
If you paid to have this service done before the date of this letter, Ford is offering a full refund. For the refund, please show your paid work-order to your Ford dealer.

CHANGED ADDRESS OR SOLD THE CAR?
Please fill out the enclosed prepaid postcard and mail it to us if you have changed your address or sold the car.

We are taking this action as part of our ongoing efforts to maintain owner confidence in our products. We hope this program will confirm your continued satisfaction in your Ford built car.

Technical Service Bulletin # **9319B18** Date: **930929**

Fuel Tank - Removal Procedure Revision

Article No.
93-19B-18

09/29/93

SERVICE MANUAL - 1993 - PAGES 10-01-7 AND 10-01-8 - FUEL TANK REMOVAL PROCEDURES REVISED

FORD:
1993 PROBE

ISSUE:
Fuel Tank removal procedures require the revision of fuel draining methods. Pages 10-01-7 and 10-01-8 of the 1993 Probe Service Manual are affected.

REMOVAL AND INSTALLATION

Fuel Tank

Removal

WARNING: THE FUEL SYSTEM CONTAINS PRESSURIZED FUEL AFTER THE VEHICLE IS SHUT DOWN AND WILL MAINTAIN THIS PRESSURE FOR A LONG PERIOD OF TIME.

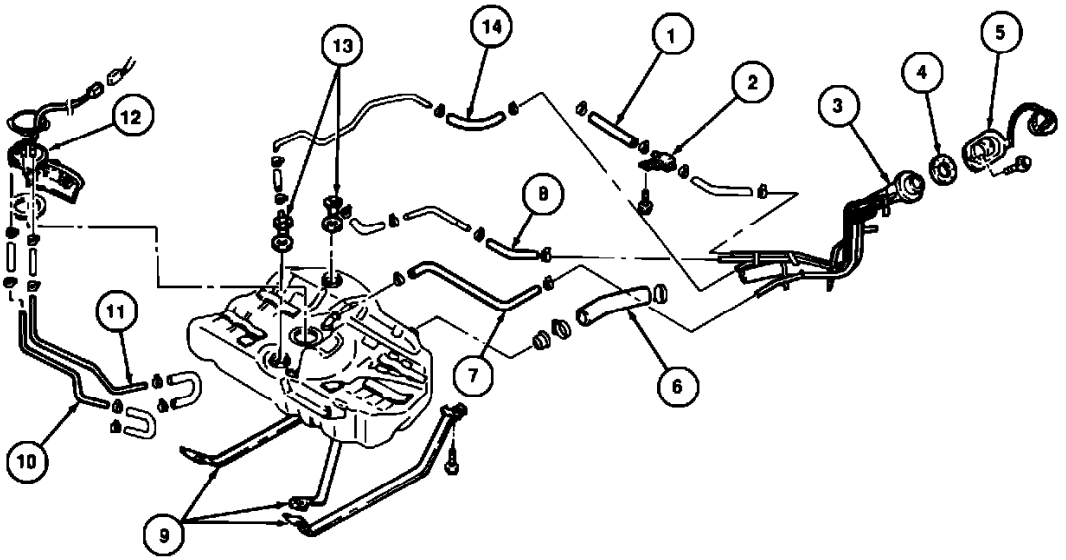

V8774-A

Item	Description
1	Carbon Canister Vapor Hose
2	Two - Way Check Valve
3	Filler Neck Assembly
4	Filler Neck Gasket
5	Filler Neck Mounting Bracket
6	Filler Neck Hose
7	Overflow Hose
8	Vapor Hose
9	Fuel Tank Straps
10	Fuel Supply Line
11	Fuel Return Line
12	Fuel Pump and Sender Assembly
13	Fuel Vapor Valves
14	Fuel Vapor Hose

1. Relieve the fuel pressure. Refer to Section 03-04A or 03-04B.
2. Disconnect the negative battery cable.

   WARNING: WHEN DRAINING FUEL FROM THE FUEL TANK, KEEP SPARKS, CIGARETTES, AND OPEN FLAMES AWAY FROM THE FUEL AREA.

3. If the fuel gauge indicates the vehicle has a half-full fuel tank or more, you must first drain the fuel directly from the fuel tank filler pipe. Drain the fuel from the fuel tank using Rotunda Fuel Storage Tanker 034-00002 with optional Rotunda Fuel Hose Adapter 034-00012 inserted into the fuel tank filler pipe. If the fuel gauge indicates that the vehicle has less than a half tank of fuel, go to the next step immediately.

REMOVAL AND INSTALLATION (Continued)

4. Raise and support the vehicle.
5. Loosen the fuel tank filler pipe hose clamp and remove the fuel tank to filler pipe hose.
6. Drain the fuel from the fuel tank using the Rotunda Fuel Storage Tanker 034-00002.

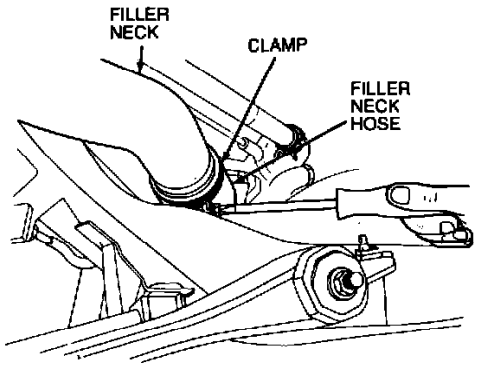

V8149-A

7. Loosen the overflow hose clamp and remove the hose.

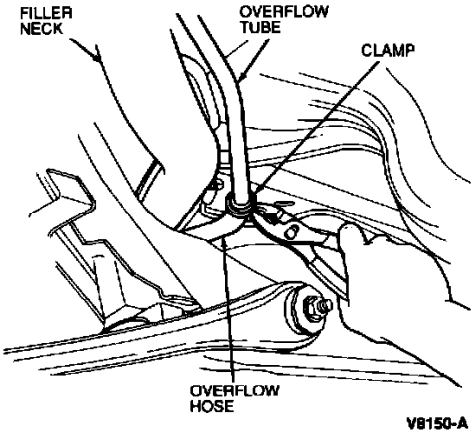

V8150-A

8. Loosen the fuel supply line clamp and remove the hose.
9. Loosen the fuel return line clamp and remove the hose.
10. Loosen the two fuel tank vapor line clamps and remove the hoses.
11. Disconnect the fuel pump sender electrical connector from the body harness mating connector.
12. Remove the four attaching nuts on the exhaust heat shield.

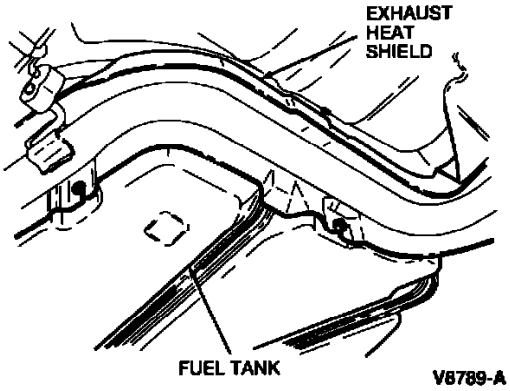

V8789-A

13. Remove the one attaching nut on the fuel tank shield.
14. Support the fuel tank and remove the center fuel tank strap.

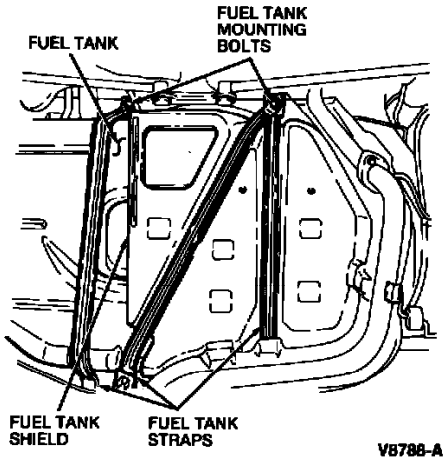

V8788-A

15. Remove the right hand fuel tank strap.

ACTION:
Refer to the pages in this TSB article for the revised information.

OTHER APPLICABLE ARTICLES: NONE
WARRANTY STATUS: INFORMATION ONLY
OASIS CODES: 490000

Technical Service Bulletin # **94B46** Date: **950201**

Overview of Program 94B46

OWNER NOTIFICATION PROGRAM
94B46

1993 Ford Probe L4-121 2.0L DOHC VIN A MFI

Certain 1993/1994 Model Year Ford Probes - Water Ingestion

Dealer Letter

Attachment I

^ Administrative Information
^ Refund Codes

Attachment II

^ Labor Allowance
^ Parts Requirements
^ Claims Preparations

Attachment III

^ Technical Instructions

Customer Notification Letter

Dealer Letter

February, 1995

To: All Ford Dealers

Subject:

Owner Notification Program 94B46 - Certain 1993/1994 Model Year Ford Probes - Water Ingestion.

OASIS
Yes

Owner List
Yes

Parts Return
No

Program Timing

Affected cars are eligible for this program through December 31, 1995 regardless of mileage. (After December 31, 1995 a car is still eligible for this program if it is within the 36 month/36,000 mile Bumper-to-Bumper warranty).

Affected Vehicles

* All 1993 and 1994 Model Year Base Ford Probe Cars equipped with 2.0L engines, and produced from April 16, 1992 through January 3, 1994, (the SE 2.0L model is not affected).

* All 1993 Ford Probe GT Cars equipped with 2.5L engines, and produced from April 16, 1992 thorough December 8, 1992.

Reason For This Program

The fresh air intake duct on some of these vehicles does not provide adequate sealing to prevent water from being ingested into the engine. If significant water enters the engine, such as when driving through deep standing water, the internal components may be damaged, rendering the vehicle inoperative.

Service Action

To prevent water from being ingested into the engine, the fresh air intake duct on the affected vehicles will have a seal kit installed.

Refunds

Only for owner-paid repairs made before the date of the Owner Letter or after the date of the Owner Letter if an emergency repair was made away from the selling dealer.

Attachments

Attachment I
^ Administrative Information

1993 Ford Probe L4-121 2.0L DOHC VIN A MFI

^ Refund Codes

Attachment II

^ Labor Allowances
^ Parts Ordering Information

Attachment III

^ Technical Information

Attachment I - Administrative Information

OASIS

You must us OASIS to determine if a vehicle is eligible for this program.

Please Note
Correct all vehicles in stock before delivery.

Promptly Correct

^ Affected vehicles on the enclosed list.

^ Other eligible vehicles which are brought to your dealership.

Dealer-Owner Contact

Immediately contact any owner whose name is not on the list. Give owner a copy of the Owner Letter. Arrange with the owner for a service date.

FCSD Contact

Talk with your FCSD Parts and service Zone Manager about program concerns.

Claims

For dealers not on ACESII:

Enter 1863 claims using DWE.

See Warranty and Policy Manual: Section 5.6 - 1/Section 6.1 - 24 (Owner Notification Programs)

For dealers on ACESII:

Enter claim using DWE

See ACESII Manual, Section 5 & 6.

Owner Refunds For Dealers Not on ACESII

See Warranty and Policy Manual: Section 6.1 - Pages 25 through 26 (Owner Refund)

For owner-paid repairs made before date of Owner Letter: submit on separate Form 1863 using the codes shown below:

Program Code Field	94B46
Causal Basic Part Number	17756
Condition Code	79
Labor Operation (1st line)	REFUND
Labor Operation (2nd line)	ALLOW
Administrative Allowance	0.2 Hrs.
Customer Concern Code	N99

Owner Refunds For Dealers On ACESII

For Owner-paid repairs made before date of Owner Letter:

1993 Ford Probe L4-121 2.0L DOHC VIN A MFI

Enter using DWE.

Program Code Field	94B46
Misc. Expense Field	REFUND
Misc. Expense Field	ADMIN
Misc. Expense Field	0.2 Hrs.

Attachment II - Labor, Parts and Claim Information

Probe - Water Ingestion

Labor Allowance

OPERATION DESCRIPTION	HOURS	LABOR OPERATION
Install Seal Kit	0.5 Hrs.	B46B

Parts Requirements

Parts will not be direct shipped fro this program. Order your parts requirements through normal order processing channels.

PART NUMBER	DESCRIPTION	DEALER PRICE
F42Z-17756-A	Seal Kit	$10.00

Parts prices current until next issue of Master Price Book. For latest prices, check or call your:

^ Order Processing Center

^ DOES II

^ Updated Price Book

Claims Preparation For Dealers Not On ACESII

^ Use From 1863

^ Enter using DWE (or mail)

^ Use code information shown below:

Program Code	94B4E
Causal Basic Part Number	17756
Condition Code	79
Labor Operation	B46B
Customer Concern Code	N99

Claims Preparation For Dealers On ACESII

^ Enter using DWE

^ Use code information shown below:

Program Code	94B4E
Labor Operation	See Above

^ See section 5 and 6 of ACESII Manual for detailed instructions.

Attachment III - Technical Instructions

Water Ingestion Service Kit
Installation Instructions For 1993 & 1994 Probe

Technical Instructions

NOTE:
Included in the following instructions are three (3) separate procedures, depending on which model Probe is being serviced. Verify the production date and install the service kit according to these installation instructions.

1993 Ford Probe L4-121 2.0L DOHC VIN A MFI

MODEL - PROD.DATE	4-16-92 thru 12-8-92	12-9-92 thru 1-3-94
BASE	PROCEDURE A	PROCEDURE B
GT	PROCEDURE C	

Service Kit Part Number F42Z 17756A

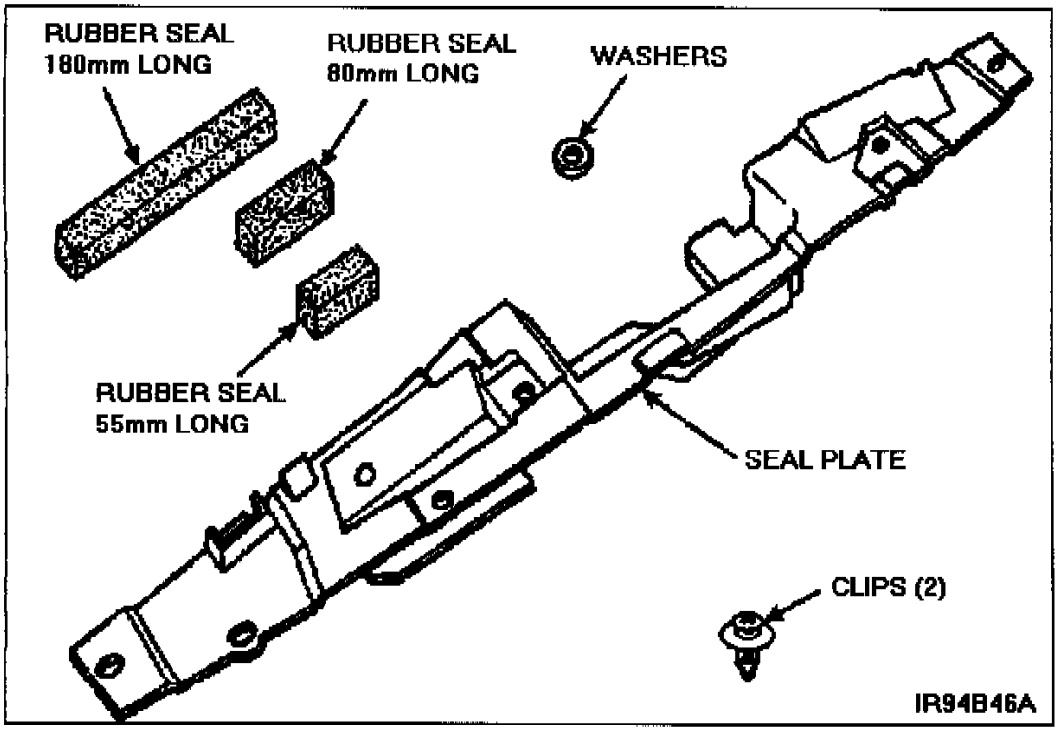

The service kit contains the items as shown.

Procedure A

1. Open the hood.

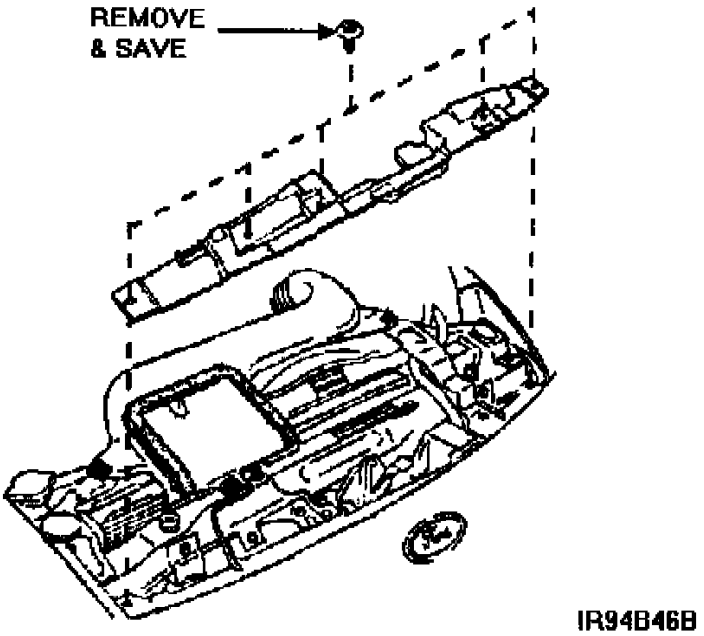

2. Remove the seal plate from the vehicle and discard. Save the five (5) attaching clips.

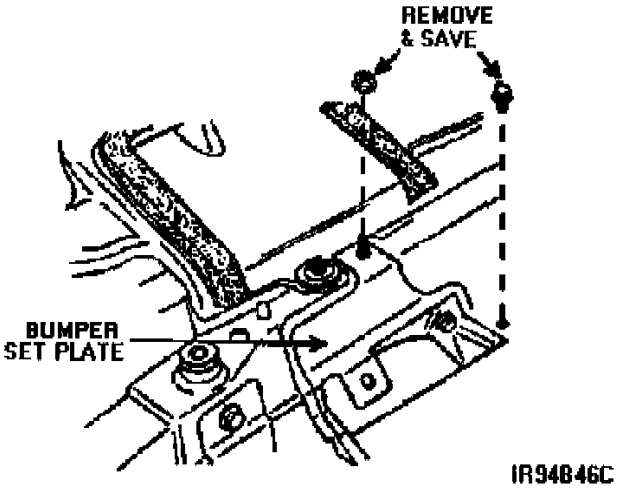

3. Remove one (1) bolt and one (1) nut that secures bumper set plate and save.

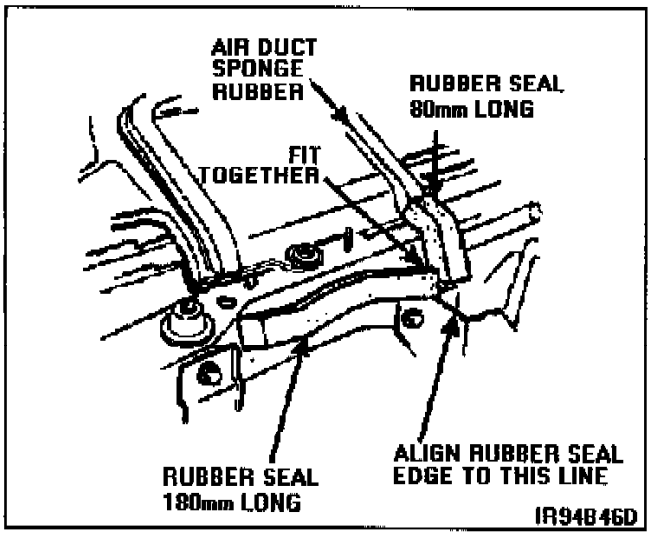

4. Slightly pry up the bumper set plate. Clean the shroud upper plate in areas where rubber seal is to be applied. Affix the rubber seal (180 mm long) along the shroud upper plate crease behind the bumper set plate.

5. Affix the rubber seal (80 mm long) to the end of the air duct sponge rubber, and ensure that all rubber seals fit together.

6. Reinstall the bumper set plate nut and bolt.

7. Temporarily install the new seal plate by using two clips saved in step 2. Drill two (2) 11/32" holes where indicated. Remove the new seal plate. Clean off metal shavings and apply Ford Super Seal Compound # F3AZ-19515-SA (or equivalent) to holes.

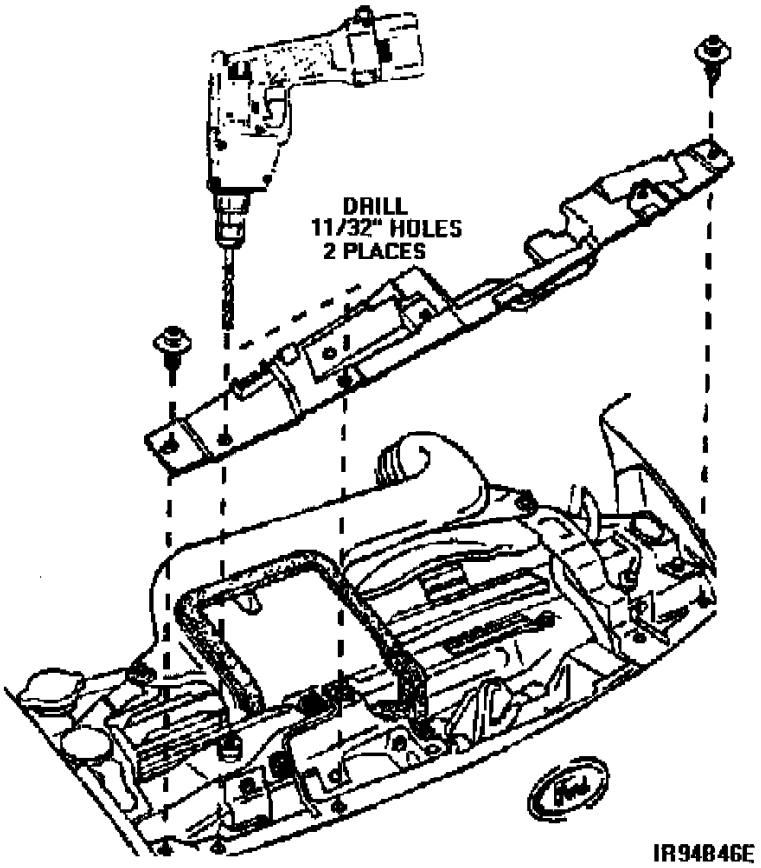

8. Fasten the new seal plate with the five (5) original clips, three (3) new washers and two (2) additional clips as shown. Make certain that you install three (3) washers in the proper position as indicated.

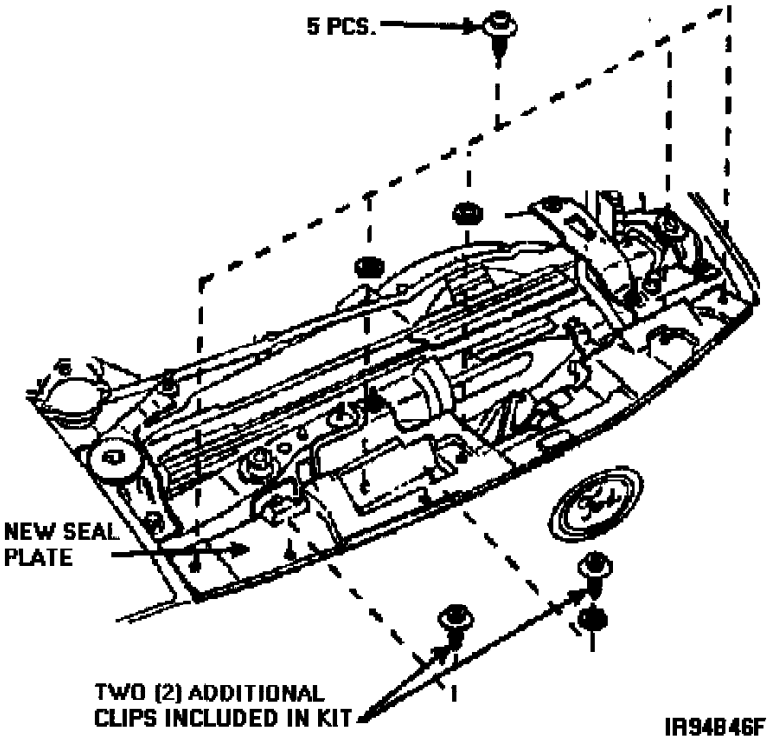

9. Remove the air intake duct and locate the rubber seal at the bottom of air duct. Trim the rubber seal material parallel with the seal backing (steel) plate. Reinstall the air duct.

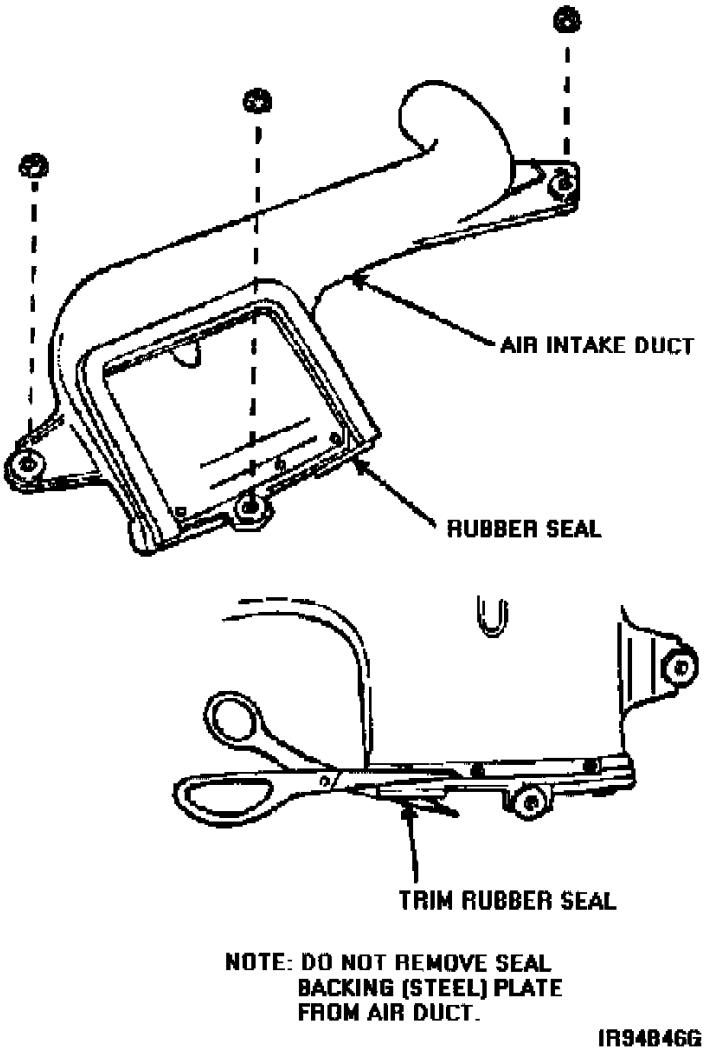

10. Wipe off the area next to the hood striker. Affix the rubber seal (55 mm long) to the area as shown.

Procedure B

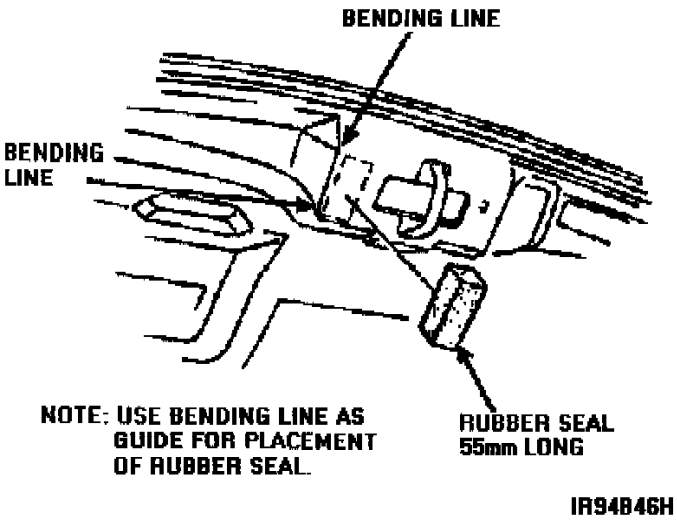

1. Open the hood.

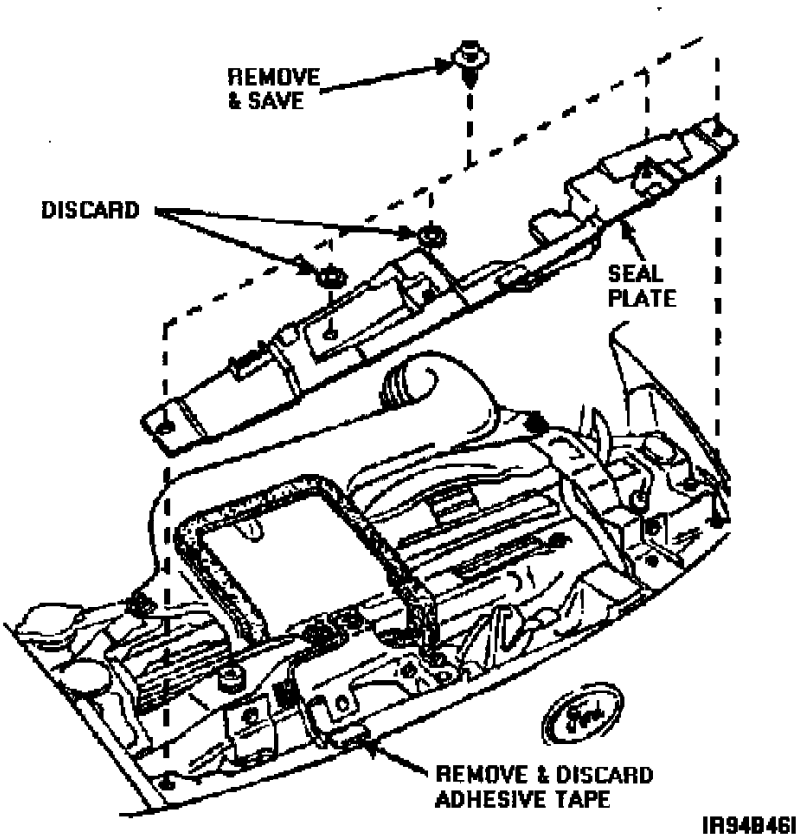

2. Remove the seal plate from the vehicle and discard. Save the five (5) attaching clips. Discard two (2) washers

NOTE:
Vehicles produced during 9-1-93 thru 1-3-94 have adhesive tape between the seal plate and bumper. This adhesive tape should be removed.

NOTE:
Make certain that the following three (3) rubber seals are already installed on the vehicle:

^ 180 mm rubber seal located underneath bumper set plate.

^ 70 mm rubber seal in front of air duct.

^ 55 mm rubber seal next to the hood striker.

If either 180 mm or 70 mm rubber seal is not installed, install it by referring to Procedure A, Step 10.

If 55 mm rubber seal is not installed, install it by referring to Procedure A, Step 10.

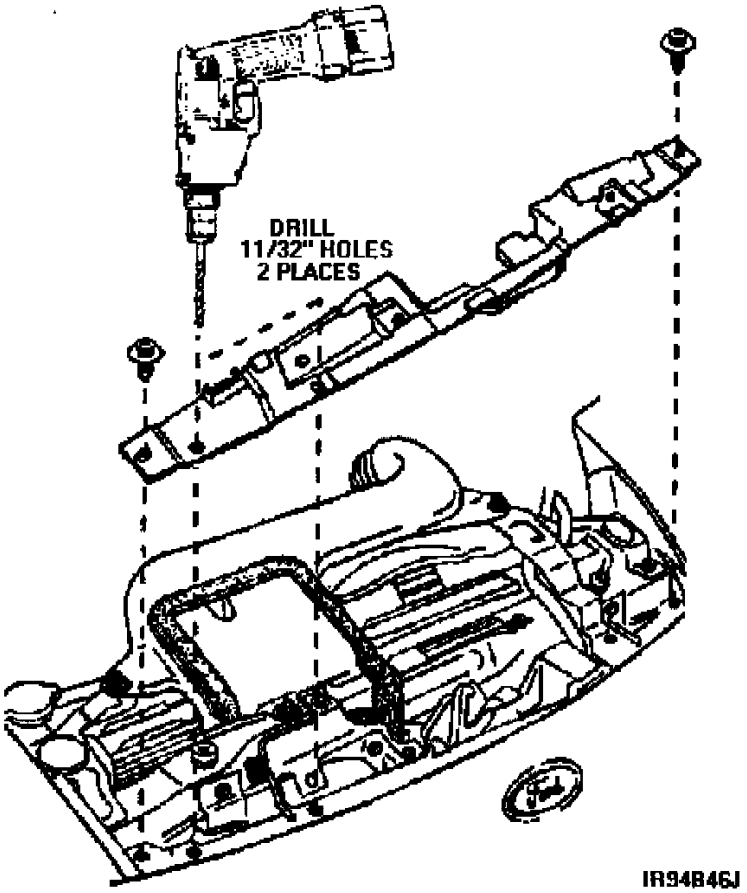

3. Temporarily place the new seal plate by using two (2) clips retained in step 2. Using the new seal plate as a pattern, drill two (2) 11/32" holes where indicated. Remove the new seal plate. Clean off metal shavings and apply Ford Super Seal Compound # F3AZ-1 951 5-SA (or equivalent) to holes.

4. Fasten the new seal plate with the five (5) original clips, three (3) new washers and two (2) additional clips as shown. Make certain that you install three (3) washers in the proper position as indicated.

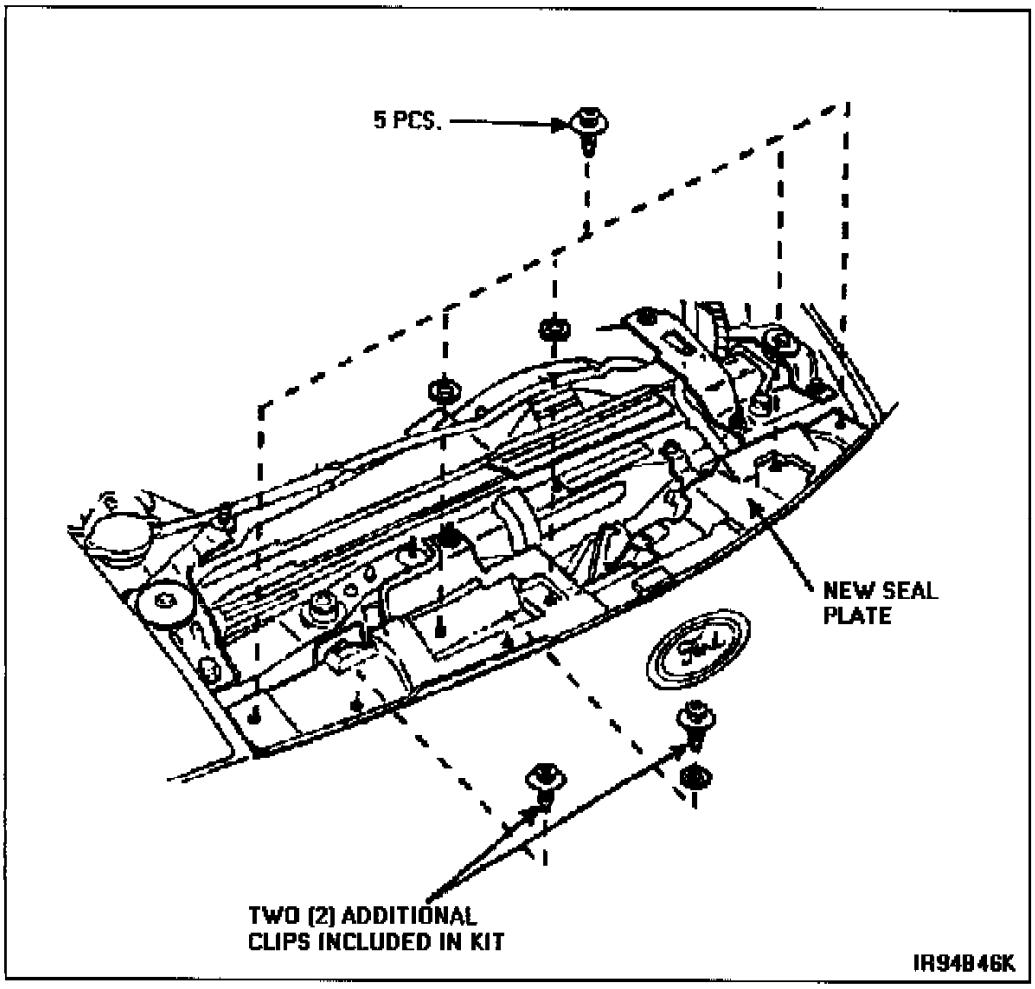

5. Discard three (3) rubber seals included in the kit, unless needed in Step 2.

Procedure C

1. Open the hood.

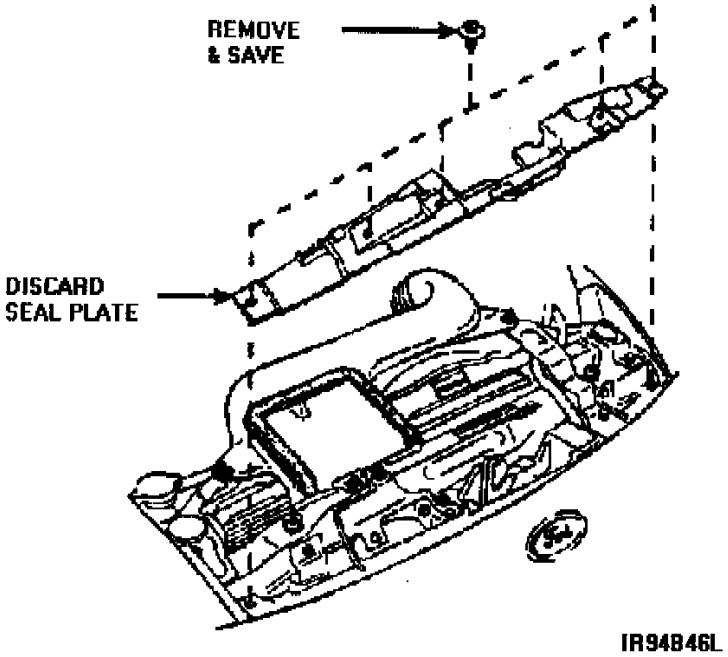

2. Remove the seal plate from the vehicle and discard. Save the five (5) attaching clips.

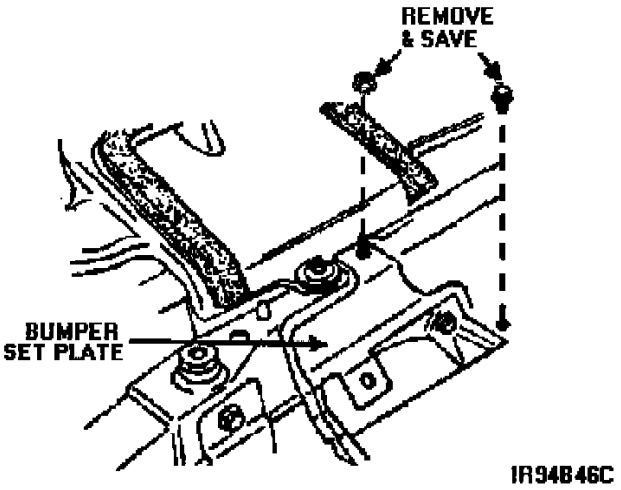

3. Remove one (1) bolt and one (1) nut that secures bumper set plate and save.

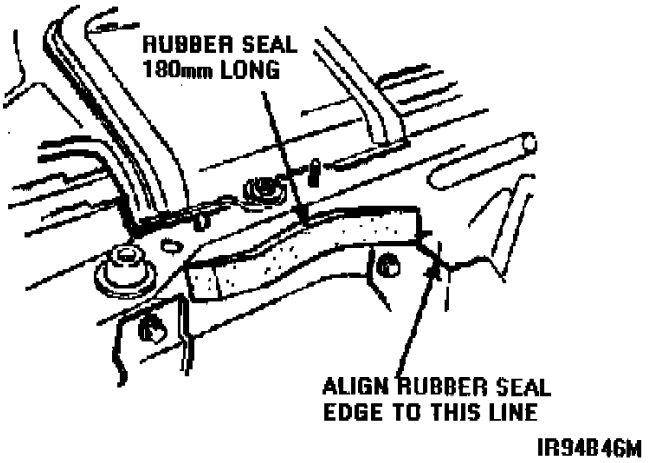

4. Slightly pry up the bumper set plate. Clean the shroud upper plate. Affix the rubber seal (180 mm long) along the shroud upper plate crease as indicated.

Discard 80 mm and 55 mm long rubber seals included in the service kit.

5. Reinstall the bumper set plate nut and bolt.

6. Fasten new seal plate by using five (5) original clips and two (2) washers as shown. Make certain that you install two (2) washers in the proper positions as indicated.

1993 Ford Probe L4-121 2.0L DOHC VIN A MFI

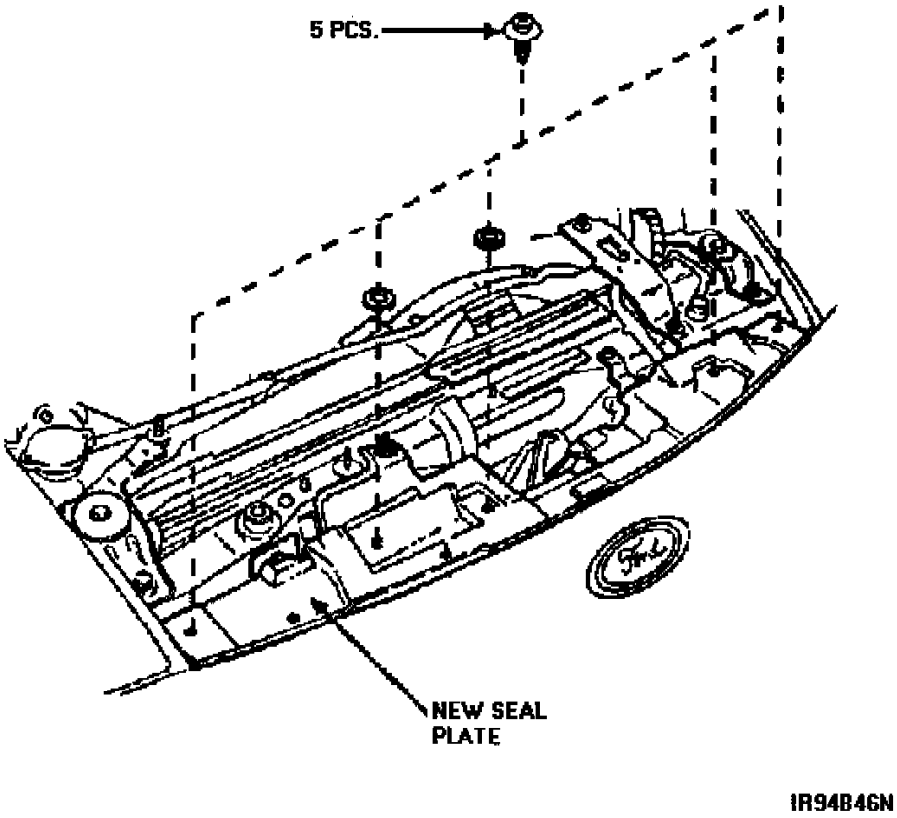

7. Discard one (1) washer, two (2) clips and two (2) rubber seals included in kit.

Owner Letter

Date, here

Serial Number: 12346578901234657 94B46

Mr. John sample
123 Main Street
Anywhere, USA 12345

Ford Motor Company is providing a no-charge Service Program, Number 94B46, to owners of certain 1993/1994 Model Year Ford Probes.

Reason For This Program

The fresh air intake duct on your car does not provide adequate sealing to prevent water from being ingested into the engine. If significant water enters the engine, such as when driving through deep standing water, the internal engine components may be damaged, rendering the vehicle inoperative.

No Charge Service

To prevent this from happening, and at no charge to you, your dealer will install a seal kit on your car.

Your car is eligible for this program through December 31, 1995 regardless or mileage. (After December 31, 1995 your car is still eligible for this program if it is within the 36 month/36,000 mile Bumper-to-Bumper warranty).

How Long Will It Take?

The time needed for this service is about one hour. However, due to service scheduling times, your dealer may need your car for one full working day.

Call Your Dealer

Ask for a service date and if parts are in stock.

It your dealer does not have the parts in stock, they can be ordered before scheduling your service date. Parts would be expected to arrive within a week.

When you bring your car in, show the dealer this letter.

If you misplace this letter, your dealer will still do the work, free of charge.

Refunds

If you paid to have this service done before the date of this letter, Ford is offering a full refund. For the refund, please give your paid original receipt to your Ford dealer.

Changed Address or Sold the Car?

Please fill out the enclosed prepaid postcard and mail it to us if you have changed your address or sold the car.

We are taking this action as part of our ongoing efforts to maintain owner confidence in our products. We hope this program will confirm our commitment to your continued satisfaction in your Ford Probe.

Technical Service Bulletin # **94125** Date: **940615**

Power Window Switches - Obsolete Part Return

Article No.
94-12-5

06/15/94

^ SWITCHES - POWER WINDOWS - SERVICE PARTS RETURN OF OBSOLETE POWER WINDOW SWITCHES

^ SERVICE PARTS RETURN OF OBSOLETE POWER WINDOW SWITCHES

FORD:
1993-94 PROBE

ISSUE:
An improved design Power Window Switch is available to reduce the occurrence of paint peeling from the switch.

ACTION:
Remove the obsolete parts from your dealership's inventory. Obsolete parts should be returned to your facing PDC within thirty (30) days of this TSB.

There is a yellow date code on each part (e.g. 3KO2), meaning (3) 1993 and (K) November and (02) the day of the month. Any part with a date code of 3KO2 or later is an improved part. Only those parts that have a date prior to 3KO2 should be returned to your facing PDC.

1. Perform 100% sort of all dealership stock on hand. Okay stock has date code of 3KO2 or later.

2. Suspect stock has date code 3K01 or prior. Return all suspect parts F32Z-14529-A and F32Z-14529-B to your facing PDC using the least expensive transportation.

3. If claim is processed electronically using DOES II, use return code "GB"; otherwise, complete a separate paper claim form FPS-340 using return code "J".

4. In the "Remarks" section, write "Returned Per TSB 94-12-5".

LIMITS

^ The returns must be received within 30 days from the date of this TSB.

^ Returns are restricted to the subject part.

^ The parts must have been purchased from FCSD in accordance with Policy And Procedure Bulletin 4000.

CREDIT
Credit for parts and prepaid freight costs will be issued.

Replacement stock is available for reordering.

PART NUMBER	PART NAME	CLASS
F32Z-14529-A	Power Window Switch	B
F32Z-14529-B	Power Window Switch	B

OTHER APPLICABLE ARTICLES: NONE
WARRANTY STATUS: INFORMATION ONLY
OASIS CODES: 205000

Technical Service Bulletin # **95143** Date: **950717**

Headlamp Door - Erratic or intermittant Operation

Article No.
95-14-3

07/17/95

^ HEADLAMP DOOR - OPERATING CONTINUOUSLY OR INTERMITTENTLY CYCLES OPEN AND CLOSED - VEHICLES BUILT FROM 4/16/92 THROUGH 4/18/95

^ HEADLAMPS - HEADLAMP DOORS CONTINUOUSLY OR INTERMITTENTLY CYCLE OPEN AND CLOSED - VEHICLES BUILT FROM 4/16/92 THROUGH 4/18/95

FORD:
1993-95 PROBE

ISSUE:
Intermittent headlamp door operation may occur on some vehicles. The headlamp doors may continuously or intermittently cycle open and closed. This may be caused by water or other contaminants corroding the left or right headlamp retractor connector.

ACTION:
Inspect the connectors for corrosion and if present, replace the headlamp retractor motor. Refer to the following Service Procedure for details.

SERVICE PROCEDURE

1. Inspect the left and/or right headlamp retractor connectors for corrosion.

2. If corrosion exists, replace the headlamp retractor motor assembly. Refer to the appropriate Service Manual for details.

3. Remove any corrosion from the wiring harness side of the connector.

4. Apply Di-Electric Grease (D7AZ-19A331-A) to the connector.

PART NUMBER	PART NAME
F32Z-13A167-A	Headlamp Retractor Motor Assembly
F32Z-13A167-B	Headlamp Retractor Motor Assembly
D7AZ-19A331-A	Di-Electric Grease

Parts Block

OTHER APPLICABLE ARTICLES: NONE

WARRANTY STATUS:
Eligible Under The Provisions Of Bumper To Bumper Warranty Coverage

OPERATION	DESCRIPTION	TIME
951403A	Replace Left Headlamp Door Motor	0.9 Hr.
951403B	Replace Right Headlamp Door Motor	0.7 Hr.
951403C	Replace Both Headlamp Door Motors	1.2 Hrs.

DEALER CODING

BASIC PART NO.	CONDITION CODE
13A167	H2

OASIS CODES: 201000, 201200, 203000, 203200

Technical Service Bulletin # **95211** Date: **951023**

Air Bag Modules - Discolored/Marred Covers

ARTICLE NO.
95-21-1

1993 Ford Probe L4-121 2.0L DOHC VIN A MFI

10/23/95

SUPPLEMENTAL RESTRAINT SYSTEM - AIR BAG MODULES - DISCOLORED OR MARRED COVERS - PAINTING RESTRICTIONS

FORD:
1988-94 TEMPO
1990-96 CROWN VICTORIA, MUSTANG, TAURUS
1992-96 PROBE
1994-96 ASPIRE, ESCORT, THUNDERBIRD
1995-96 CONTOUR

LINCOLN-MERCURY:
1988-96 CONTINENTAL
1989-94 TOPAZ
1990-92 MARK VII
1990-96 GRAND MARQUIS, SABLE, TOWN CAR
1991-94 CAPRI
1993-96 MARK VIII
1994-96 COUGAR, TRACER
1995-96 MYSTIQUE

LIGHT TRUCK:
1992-96 AEROSTAR, ECONOLINE
1994-96 BRONCO, F-150-350 SERIES, VILLAGER
1995-96 EXPLORER, RANGER, WINDSTAR

This TSB is being republished in its entirety to include 1994-96 vehicles.

ISSUE:
The covers of the driver and passenger air bag modules MUST NOT be repainted for any reason. Any applied paint may damage the cover material. This could affect air bag performance during deployment and may increase the risk of injury during a collision.

ACTION:

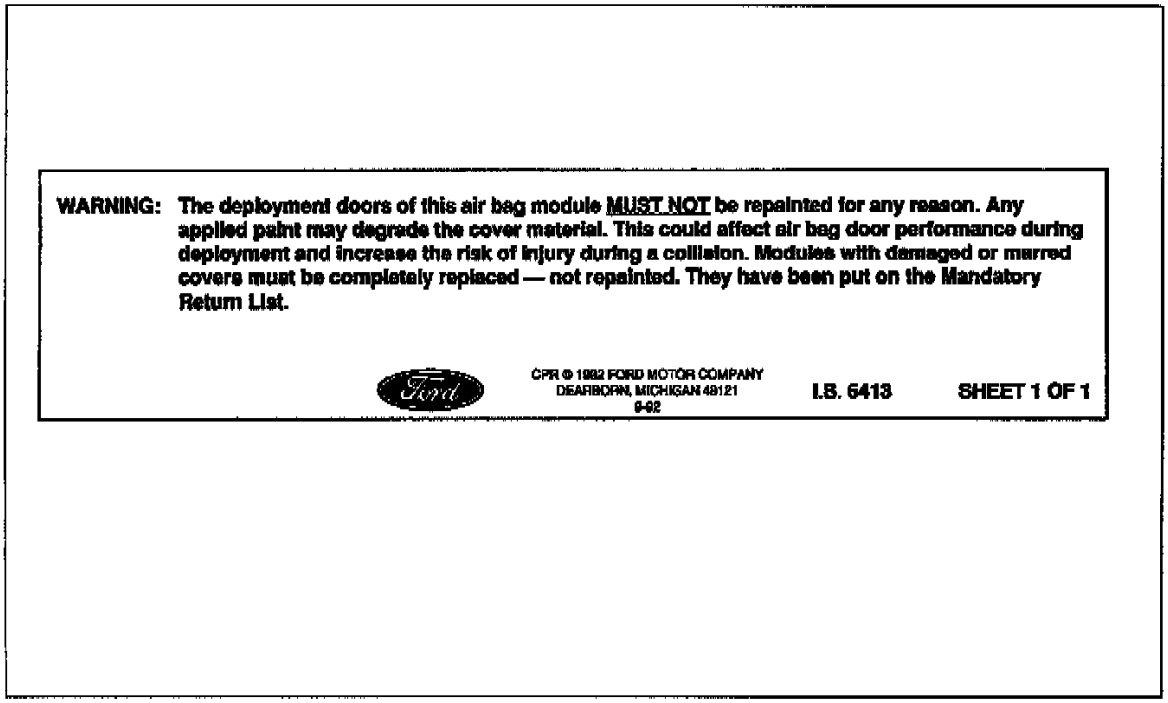
WARNING: The deployment doors of this air bag module MUST NOT be repainted for any reason. Any applied paint may degrade the cover material. This could affect air bag door performance during deployment and increase the risk of injury during a collision. Modules with damaged or marred covers must be completely replaced — not repainted. They have been put on the Mandatory Return List.

Ford

CPR © 1992 FORD MOTOR COMPANY
DEARBORN, MICHIGAN 48121
9-92

I.S. 6413 SHEET 1 OF 1

Figure 1

Air Bag Modules with damaged or marred deployment covers MUST BE COMPLETELY REPLACED - NOT REPAINTED. Refer to the Dealer Master Parts Catalog for correct parts usage. Air bag modules are on the Mandatory Return List and must be returned to the Warranty Parts Return Center. Refer to Figure 1. Refer to TSB 91-9-1 for air bag return information.

OTHER APPLICABLE ARTICLES: 91-9-1
SUPERSEDES: 92-24-1
WARRANTY STATUS: INFORMATION ONLY
OASIS CODES: 104000, 107000

Technical Service Bulletin # **96254** Date: **961202**

Air Bag System - Error Code 51Diagnostics/Repair

Article No.
96-25-4

12/02/96

^ RESTRAINT SYSTEM - AIR BAG MODULE - DIAGNOSTIC FAULT CODE 51 - IMPROVED DIAGNOSTICS AND REPAIR

^ AIR BAG - DIAGNOSTIC FAULT CODE 51 - IMPROVED DIAGNOSTICS AND REPAIR

FORD:
1993-97 PROBE

ISSUE:
Some vehicles may experience the air bag diagnostic light flashing. The air bag warning indicator may flash as follows:

^ Five (5) flashes, followed by

^ 1 second pause, followed by

^ a single flash, then

^ the sequence repeats itself.

This may be caused by a short-to-ground or intermittent short-to-ground in the air bag wiring. Air bag diagnostic monitors displaying Fault Code 51 are repeatedly being replaced without having first corrected a possible short-to-ground or intermittent short-to-ground in the system.

ACTION:
Deactivate the air bag system and check for and repair any possible shorts-to-ground in the air bag wiring. Replace Diagnostic Air Bag Monitor, reactivate the system and perform an air bag system prove-out. Refer to the following for detailed service procedures.

PART NUMBER	PART NAME
F32Z-14B056-A	Monitor Assembly
WT-5627-A	Heat Shrink Tubing
95873-S	Wiring Retainer
(Obtain Locally)	63/37 Rosin core Solder
(Obtain Locally)	Vinyl Electrical Tape
(Obtain Locally)	Cloth Duct Tape

OPERATION: USE ACTUAL TIME

OTHER APPLICABLE ARTICLES: NONE

WARRANTY STATUS: Eligible Under The Provisions Of Bumper To Bumper Warranty Coverage And Restraint Systems Coverage

DEALER CODING

BASIC PART NO.	CONDITION CODE
14B056	X1

OASIS CODES: 104000, 203200, 206000

General Information

The diagnostic monitor contains an internal thermal fuse that is not serviceable. The thermal fuse is controlled by a computer inside the diagnostic monitor. The computer will open the thermal fuse whenever a short on the deployment circuits occur. The thermal fuse does not open because of excessive current flowing through it. Do not attempt to jump the thermal fuse with a circuit breaker or any other type of fuse.

WARNING:
DO NOT INSTALL A NEW DIAGNOSTIC MONITOR UNTIL THE CAUSE OF FAULT CODE 51 HAS BEEN LOCATED AND REPAIRED. IF A SHORT-TO-GROUND HAS NOT BEEN LOCATED AND REPAIRED, THE SHORT IS INTERMITTENT AND IS NOT PRESENT AT THIS TIME. INSTALLING A NEW DIAGNOSTIC MONITOR WITH AN INTERMITTENT SHORT IN THE SYSTEM WILL RESULT IN REPEAT OPEN THERMAL FUSES IN DIAGNOSTIC MONITORS AND REPEAT SERVICE.

Air Bag Diagnostic Monitor Internal Thermal Fuse – Fuse Blown Due to Intermittent Short-to-Ground

Fault Code 51

Normal Operation

NOTE: The air bag diagnostic monitor contains an internal thermal fuse that is not serviceable. The thermal fuse is controlled by a computer inside the air bag diagnostic monitor. The computer will blow the thermal fuse whenever a short on the deployment circuits occurs. **The thermal fuse does not blow because of excessive current flowing through it. DO NOT attempt to jumper across the thermal fuse with a circuit breaker or any other type of fuse.**

CAUTION: Do not install a new air bag diagnostic monitor until the short has been located and corrected. If a short-to-ground has not been located and corrected, then the short-to-ground is intermittent and is not present at this time. Installing a new air bag diagnostic monitor with an intermittent short in the system will result in repeated blown air bag diagnostic monitors and repeat repairs.

The air bag diagnostic monitor measures the voltages at the air bag diagnostic monitor connector pins. When certain air bag deployment wires are shorted-to-ground (heavy lines illustrated in the following schematic), the system may become susceptible to an unwanted deployment of the air bags. The air bag diagnostic monitor senses a short-to-ground on any of these circuits and helps prevent unwanted air bag deployment by blowing the air bag diagnostic monitor thermal fuse. Blowing this fuse removes all power (battery and backup power) from the air bag deployment circuits. While the short-to-ground exists, the air bag diagnostic monitor will flash a Fault Code 13. If the short-to-ground is intermittent and temporarily corrects itself, the air bag diagnostic monitor will flash a Code 51.

NOTE: If the short-to-ground returns, the higher priority Code 13 will flash instead of 51.

If the air bag warning indicator is flashing Code 51 and a short-to-ground has not been serviced, this means that an **intermittent** short-to-ground exists in the air bag system. The air bag diagnostic monitor should be replaced only after repairs to the intermittent short have been completed.

Some service tips for finding an intermittent short-to-ground are:

1. Consult OASIS (Restraint Systems Service Code 104000) for up-to-date diagnostics and descriptions of wiring concern locations for the vehicle (VIN) you are working on. OASIS is updated daily using concern descriptions from engineering and dealership service sources.
2. Inspect wiring and harnesses in areas where they pass through or are located next to metal components (e.g., engine compartment bulkhead, body sheet metal, component mounting brakes, etc.).

CODE 51 SEQUENCE OF EVENTS

Short-to-ground occurs on one or more of the circuits indicated by heavy lines in the electrical schematic.

↓

The air bag diagnostic monitor recognizes the shorted wiring and flashes a Fault Code 13 and sends a signal to the internal thermal fuse, causing it to blow.

↓

The air bag diagnostic monitor will continue to flash the Code 13 while the short-to-ground is present. If the short-to-ground goes away, a Fault Code 51 appears.

↓

The air bag diagnostic monitor only flashes a Code 51 when the thermal fuse is blown and the short-to-ground is not present. **Do not replace the air bag diagnostic monitor until the short-to-ground has been located and serviced.** Consult OASIS for shorted wiring information.

Code 51 After Air Bag Deployment

NOTE: Air bag diagnostic monitors can withstand several air bag deployments and do not need to be replaced after every deployment. Only replace the air bag diagnostic monitor if it is damaged.

Occasionally, immediately after an air bag deploys, the internal wiring of the air bag may become shorted to the metal housings of the air bag. This internal air bag short is detected by the air bag diagnostic monitor as a short-to-ground in the air bag deployment wiring. Since the air bag diagnostic monitor is still operating immediately after most deployments, the air bag diagnostic monitor will detect the shorted wiring and will flash Code 13 and blow the internal thermal fuse. After the deployment, as the air bag cools off, the internal shorted wiring may correct itself, therefore the short-to-ground will no longer exist and the air bag diagnostic monitor will flash Code 51. If a vehicle with a deployed air bag is flashing Code 51, inspect and replace all the damaged areas of the vehicle with crushed wiring, sensors, etc. If no damage is found, assume that the deployed air bag was the cause for the intermittent short and replace the air bag diagnostic monitor when the new air bag is installed.

TB-4896-A

Figure 6

ELECTRICAL SCHEMATIC – AIR BAG DIAGNOSTIC MONITOR INTERNAL THERMAL FUSE – FUSE BLOWN DUE TO INTERMITTENT SHORT TO GROUND FAULT CODE 51

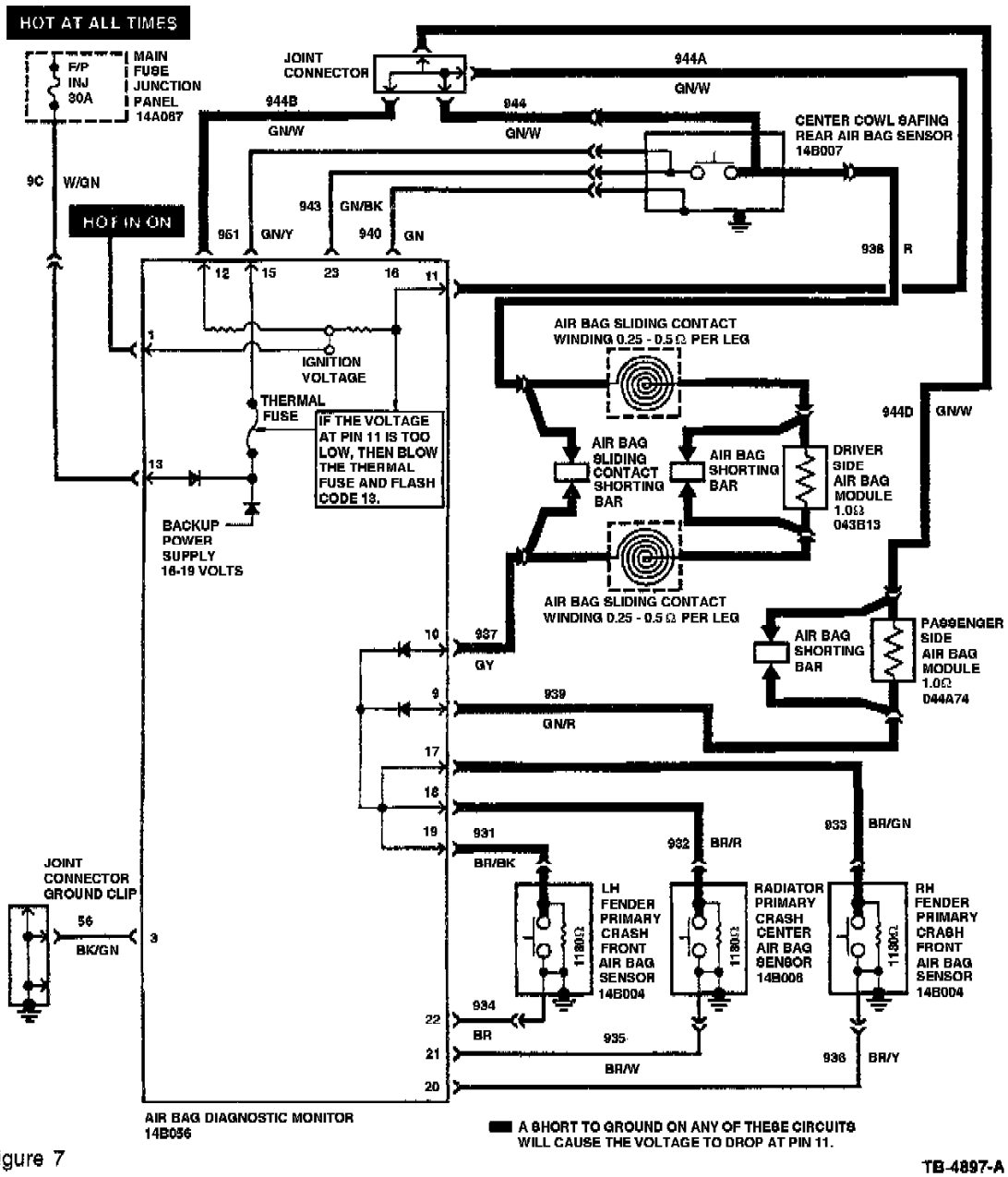

Figure 7

The diagnostic monitor measures the voltages at the diagnostic monitor connector pins. The diagnostic monitor will sense a short-to-ground on any air bag deployment circuit and if a short is detected, will open the diagnostic monitor's internal thermal fuse. With the fuse open it removes all power from the air bag deployment circuits. While the short-to-ground exists, the monitor will flash Fault Code 13. If the short-to-ground is intermittent and temporarily corrects itself, the diagnostic monitor will flash Fault Code 51. Refer to Figures 6 and 7.

If the short-to-ground returns, the higher priority Code 13 will be flashed instead of 51.

If the air bag indicator is flashing Code 51 and a short-to-ground has not been serviced, this means an intermittent short-to-ground exists in the air bag system. The diagnostic monitor should only be replaced after service of the short-to-ground has been completed.

Code 51 Sequence of Events

1. A short-to-ground occurs on one or more of the air bag deployment circuits.

Air Bag or Air Bag Sensor Circuit Shorted-to-Ground

Fault Code 13

Normal Operation

The air bag diagnostic monitor measures the voltage at Pin 11 (Circuit 944A "GN/W") of the air bag diagnostic monitor connector. The voltage at Pin 11 varies with the charging system voltage as shown below:

PIN 11 VOLTAGE CHART	
Charging System Voltage	**Voltage at Pin 11**
9.0	1.9
9.5	2.0
10.0	2.1
10.5	2.2
11.0	2.3
11.5	2.4
12.0	2.5
12.5	2.6
13.0	2.7
13.5	2.8
14.0	2.9
14.5	3.0
15.0	3.1
15.5	3.2
16.0	3.3

Note that Circuit 944A is connected to Circuit 937 ("GY") and Circuit 939 ("GN/R") through the driver side air bag module (-043B13-), passenger side air bag module (-044A74-) and center cowl safing rear air bag sensor. Also, note that Circuits 937 and 939 are connected to the RH, LH and center primary crash air bag sensor feed circuits (933 ["BR/GN"], 932 ["BR/R"], and 931 ["BR/BK"]) through diodes inside the air bag diagnostic monitor. If the air bag diagnostic monitor measures a voltage of 2.0 volts or less at Pin 11, the air bag diagnostic monitor will flash a Code 13 to indicate a possible short-to-ground on this circuit (refer to the following Possible Causes for additional circuits that may be shorted-to-ground). When flashing Code 13, the air bag diagnostic monitor blows its internal thermal fuse. This disables the air bag deployment circuit. If the voltage at Pin 11 returns to normal (because the short-to-ground no longer exists), a Fault Code 51 will be present on the air bag warning indicator, due to the open thermal fuse (refer to Fault Code 51 [Figure 6] for details).

Possible Causes

Low voltage at air bag diagnostic monitor Pin 11 can be caused by:

1. **A short-to-ground within the wiring harness on Circuits 944A ("GN/W"), 944 ("GN/W"), 944B ("GN/W"), 944D ("GN/W"), 938 ("R"), 937 ("GY"), 939 ("GN/R"), 933 ("BR/GN"), 932 ("BR/R") or 931 ("BR/BK")** causing the air bag diagnostic monitor voltage to drop.

2. **An internal short-to-ground within the air bag sliding contact** causing the driver side air bag module circuit(s) to be shorted-to-ground.

3. **An internal short-to-ground within the center cowl safing rear air bag sensor** causing Circuit 944A ("GN/W"), 944 ("GN/W"), 944B ("GN/W"), 944D ("GN/W"), or 938 ("R") to be shorted-to-ground.

4. NOTE: Circuits 933 ("BR/GN"), 932 ("BR/R") and 931 ("BR/BK") are all connected together inside the air bag diagnostic monitor. Therefore, a short-to-ground on any of these circuits will short all the circuits to ground.

   An internal short-to-ground within one or more of the primary crash air bag sensors causing Circuits 933 ("BR/GN"), 932 ("BR/R"), and 931 ("BR/BK") to be shorted-to-ground.

5. **An internal short to case ground within the driver side air bag module or passenger side air bag module.**

TB-4891-A

Figure 1

ELECTRICAL SCHEMATIC – AIR BAG OR AIR BAG SENSOR CIRCUIT SHORTED TO GROUND FAULT CODE 13

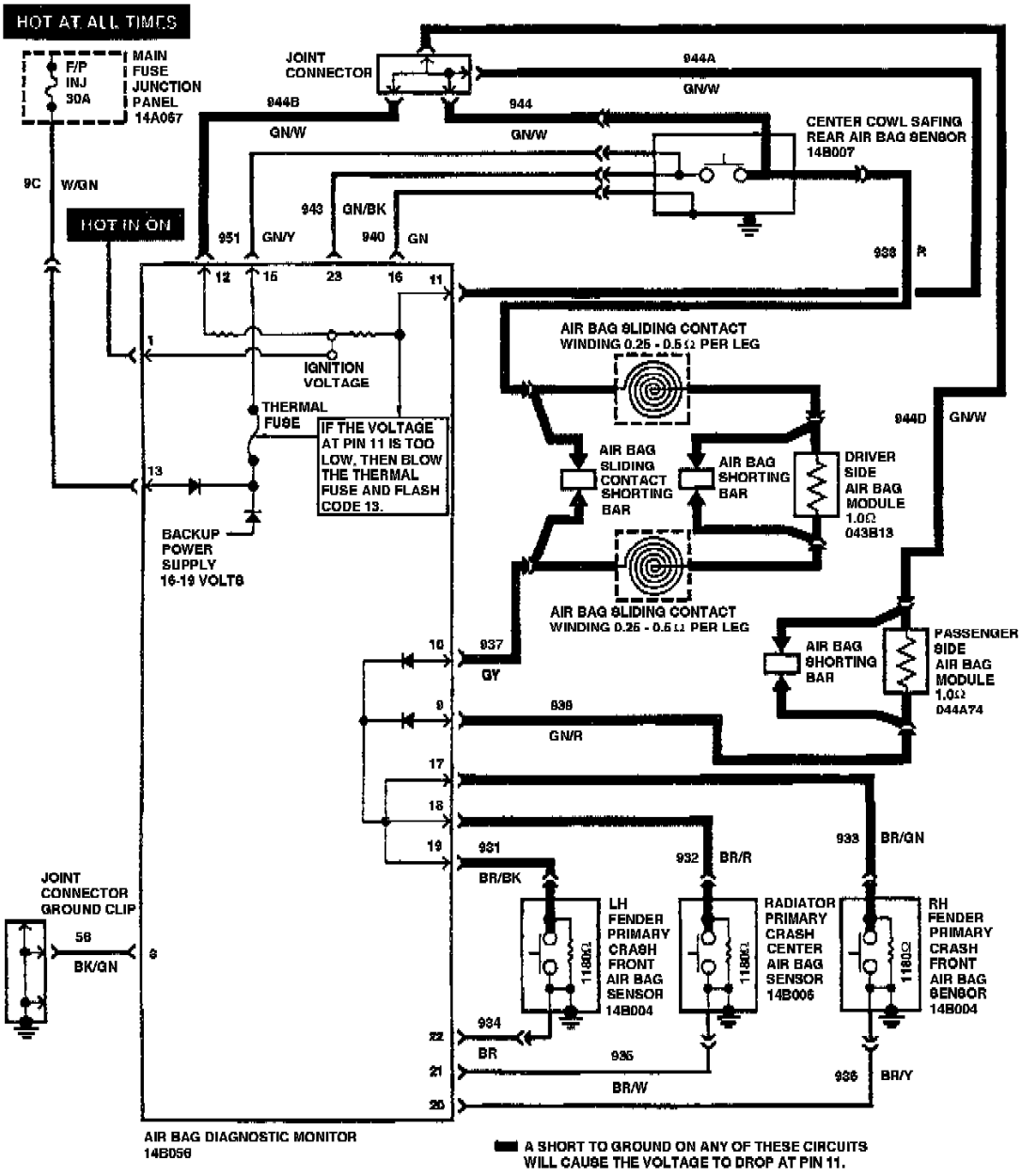

Figure 2

TB-4892-A

2. The diagnostic monitor recognizes the shorted wiring and flashes Code 13 (air bag circuit shorted). Refer to Figures 1 and 2.

NOTE:
FAULT CODE 13 WILL ONLY FLASH WHILE THE SHORT-TO-GROUND IS PRESENT.

3. The diagnostic monitor sends a signal to its internal thermal fuse, causing the fuse to blow. This disables the air bag deployment circuits.

4. The diagnostic monitor will continue to flash Code 13 while the short is present. If the short goes away, Code 51 will appear.

5. The diagnostic monitor only flashes a Code 51 when the internal thermal fuse is blown and a short-to-ground is not present.

NOTE:
IT MAY BE POSSIBLE TO REPEAT FAULT CODE 13 BY MOVING ("SHAKE-WIGGLE" TEST) THE WIRING TO RECREATE THE ORIGINAL SHORT. HOWEVER, THIS WILL REQUIRE THE REACTIVATION OF THE AIR BAG SYSTEM, WHICH WILL AGAIN REQUIRE DEACTIVATION OF THE AIR BAG SYSTEM AFTER THE TEST IS PERFORMED.

CAUTION:
ALL AIR BAG SYSTEM COMPONENTS ARE SERVICED BY REPLACEMENT ONLY. IF ANY OF THESE COMPONENTS OR COMPONENT WIRING ARE DAMAGED IN ANY WAY, THEY CANNOT BE REPAIRED AND MUST BE REPLACED.

These components include the following:

^ Driver Air Bag Module Assembly

^ Passenger Air Bag Module Assembly

^ Sliding Contact (Clockspring)

^ Diagnostic Monitor

^ Safing Sensor

^ Primary Crash Sensors

Detailed Service Procedure

WARNING:

PRIOR TO PERFORMING ANY AIR BAG DIAGNOSTICS OR REPAIRS, BE SURE TO DEACTIVATE THE AIR BAG SYSTEM. ALSO, BE SURE TO CONNECT THE CORRECT AIR BAG SIMULATOR(S) IN PLACE OF THE DRIVER AND/OR PASSENGER AIR BAG(S).

1. Thoroughly check circuitry for any intermittent wiring shorts before attempting to replace the diagnostic monitor. Do not attempt to jump the thermal fuse with a circuit breaker or any other type fuse.

WARNING:

DO NOT INSTALL A NEW DIAGNOSTIC MONITOR UNTIL THE CAUSE OF FAULT CODE 51 HAS BEEN LOCATED AND REPAIRED. IF A SHORT-TO-GROUND HAS NOT BEEN LOCATED AND REPAIRED, THE SHORT IS INTERMITTENT AND IS NOT PRESENT AT THIS TIME. INSTALLING A NEW DIAGNOSTIC MONITOR WITH AN INTERMITTENT SHORT WILL RESULT IN REPEAT BLOWN INTERNAL THERMAL FUSES IN DIAGNOSTIC MONITORS AND REPEAT SERVICE.

2. Check the following locations for shorts-to-ground:

NOTE:

THE FOLLOWING ARE THE MOST COMMON LOCATIONS WHICH HAVE BEEN IDENTIFIED FOR INTERMITTENT WIRING SHORTS. IN THE EVENT INTERMITTENT WIRING SHORTS CANNOT BE FOUND AT THESE LOCATIONS, YOU MUST CHECK ALL OF THE AFFECTED WIRING AS REQUIRED.

^ Water may have entered the diagnostic monitor due to leaks near the monitor. Check for the following indicators:

^ A. Rust on the monitor's mounting bracket.

^ B. A white milky-colored substance on the printed circuit board in the monitor.

^ Condensation may have formed in the diagnostic monitor due to humidity in the air during A/C operation. Check for the following indicators:

^ A. Rust on the monitor's mounting bracket.

^ B. A white milky-colored substance on the printed circuit board in the monitor.

^ Wires may be pinched/cut between brake pedal mounting bracket and body.

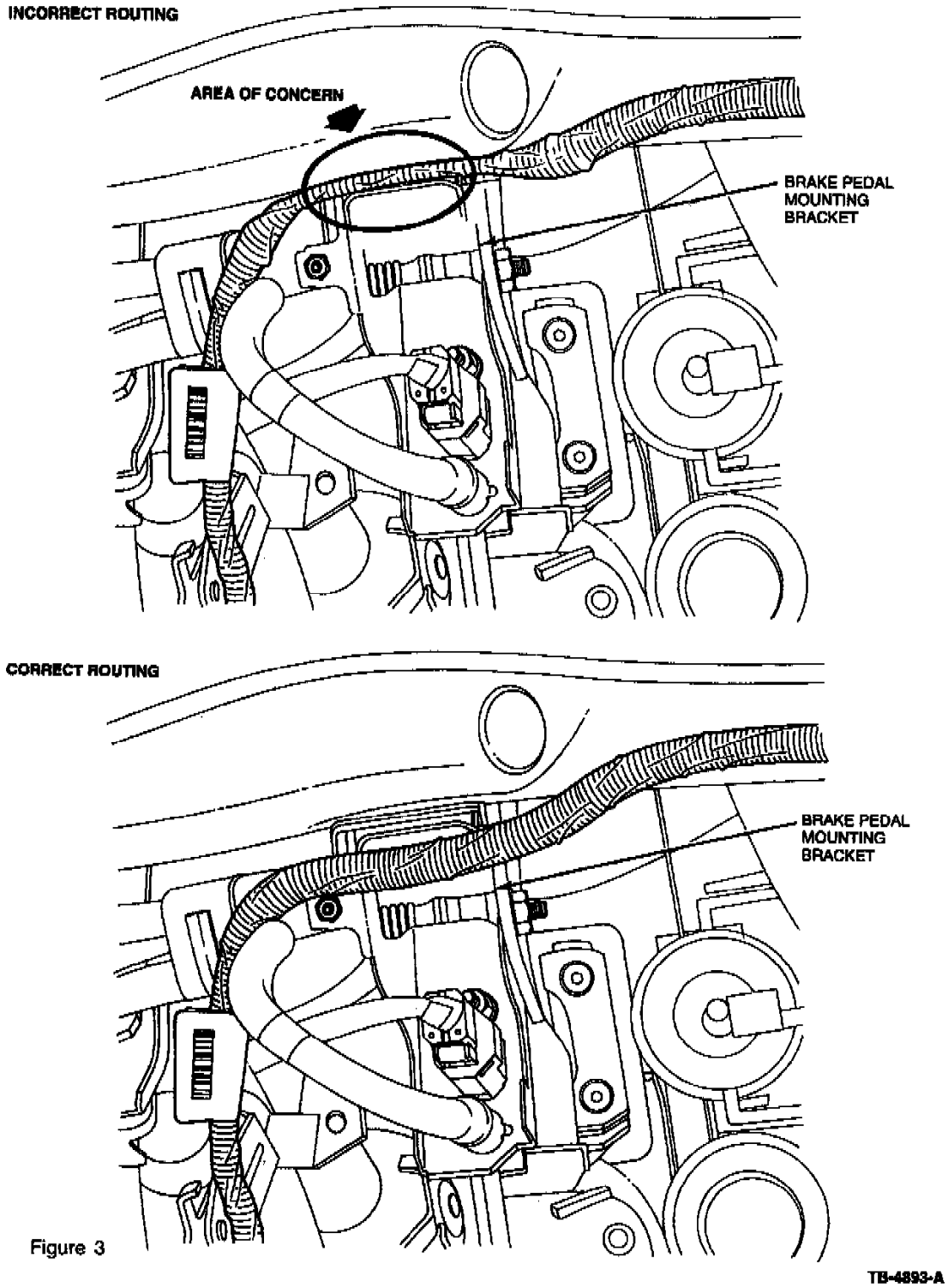

Figure 3

^ Using a flashlight, inspect air bag wire harness routing along brake pedal mounting bracket (Figure 3).

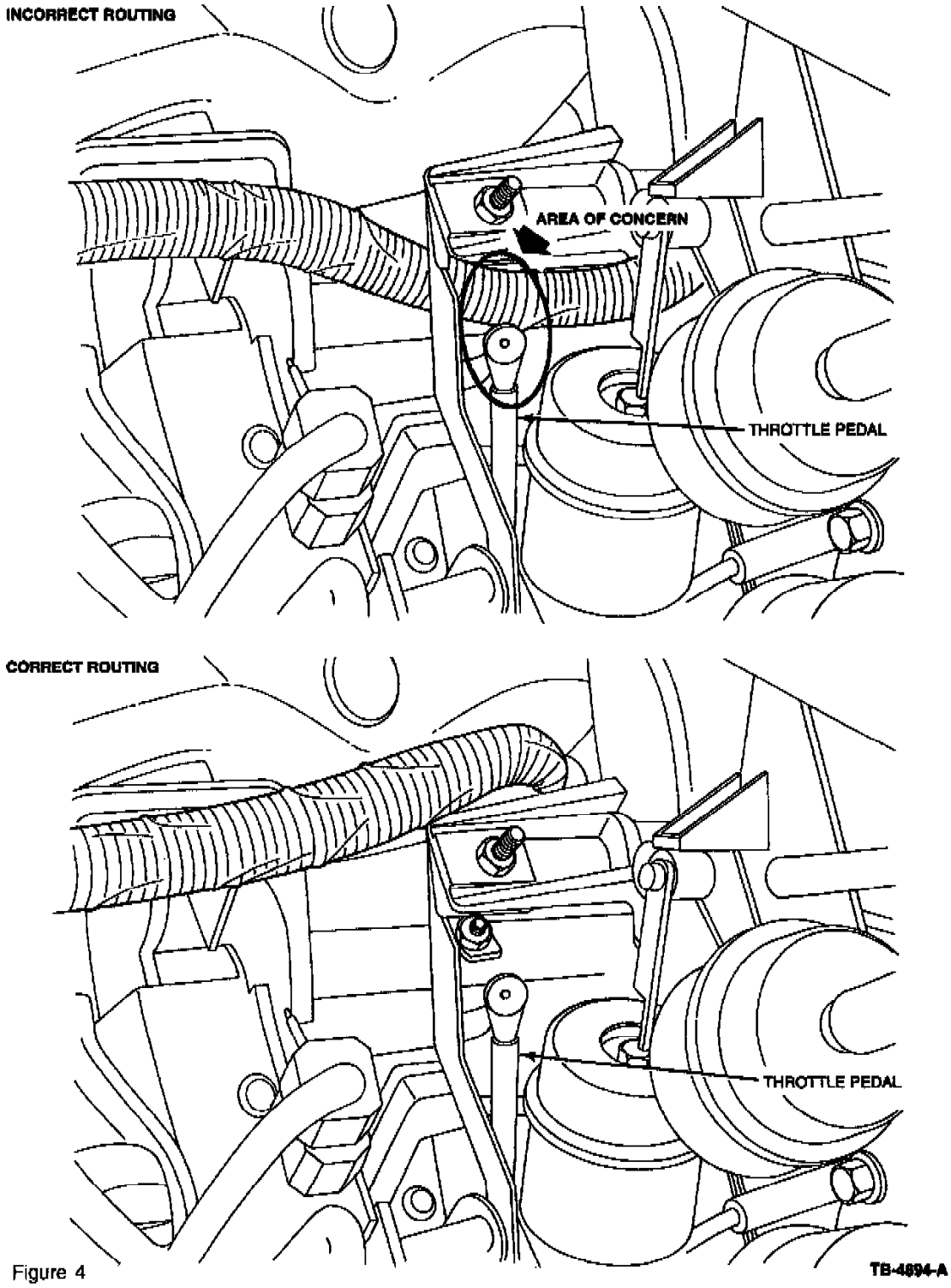

Figure 4

^ Wires may be chafed or cut above the throttle pedal (Figure 4).

^ Using a flashlight, inspect air bag wire harness routing in area above throttle pedal (Figure 4).

^ Wires may be pinched/cut between instrument panel and body on RH side behind glove compartment.

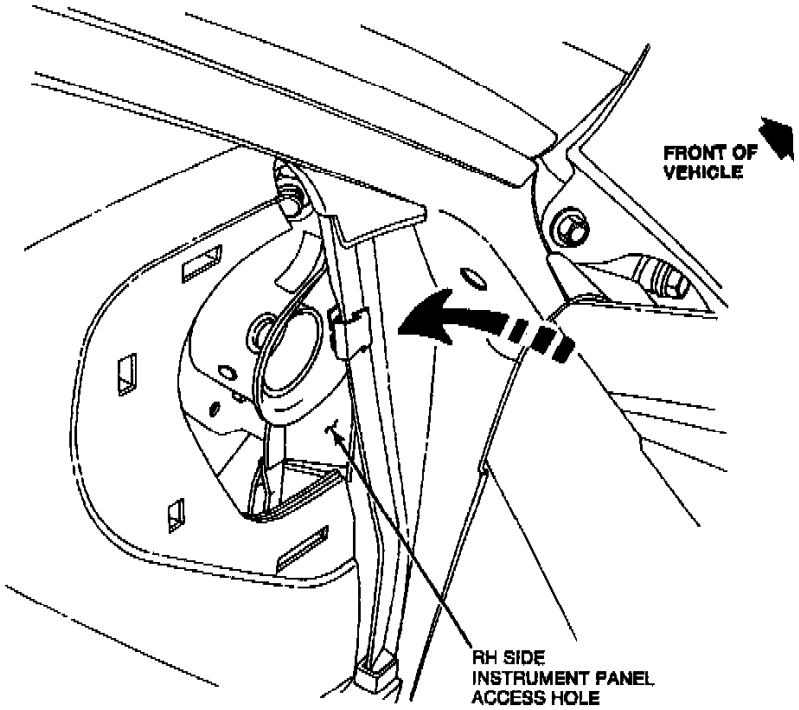

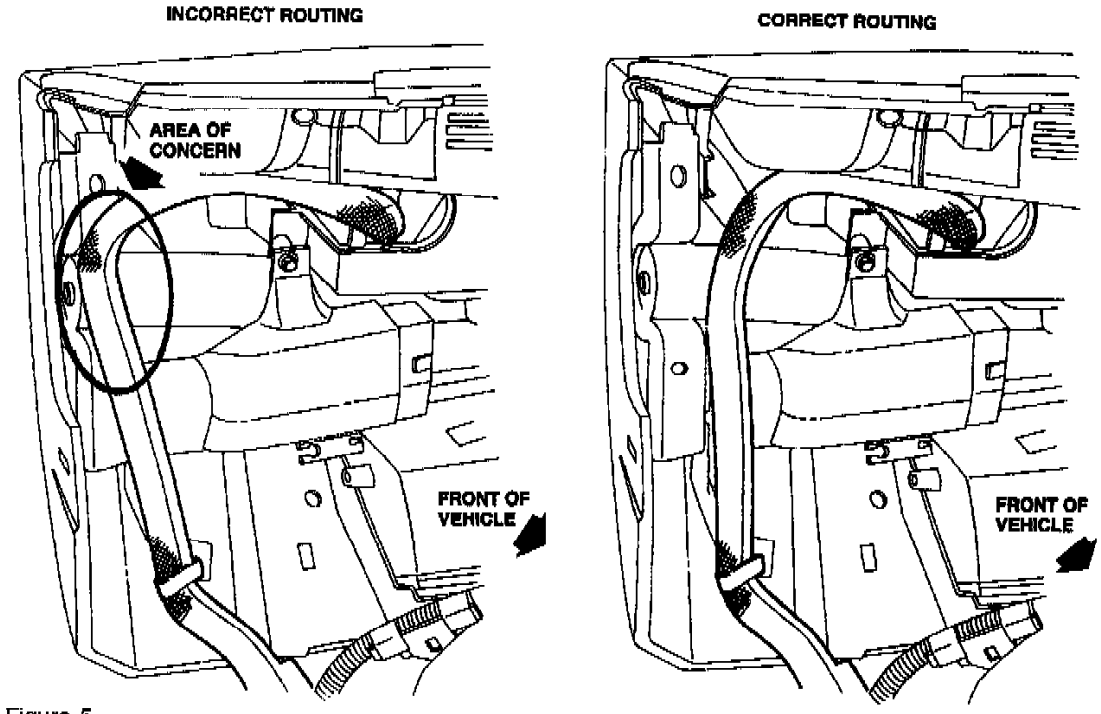

Figure 5

TB-4895-A

^ Lower glove compartment door and RH instrument panel access cover. Using a flashlight, inspect air bag wire harness routing for pinch points and/or cuts (Figure 5).

^ Inspect wiring/wiring harnesses in areas where they pass through or are located next to metal components (i.e., engine compartment bulkhead, body sheet metal, component mounting brackets, etc.).

3. Any wiring on air bag system circuits may be repaired as follows:

   a. If the insulation on any of the wires is nicked or cut, exposing bare wire, wrap affected area(s) with vinyl electrical tape.

NOTE:
USE FLAME RETARDANT VINYL ELECTRICAL TAPE FOR ANY REPAIRS IN THE ENGINE COMPARTMENT.

   b. If wire(s) are only nicked, wrap affected area(s) with vinyl electrical tape.

   c. If wire(s) are cut, proceed to Step 4.

4. Cut a piece of suitable length, same gauge replacement wire.

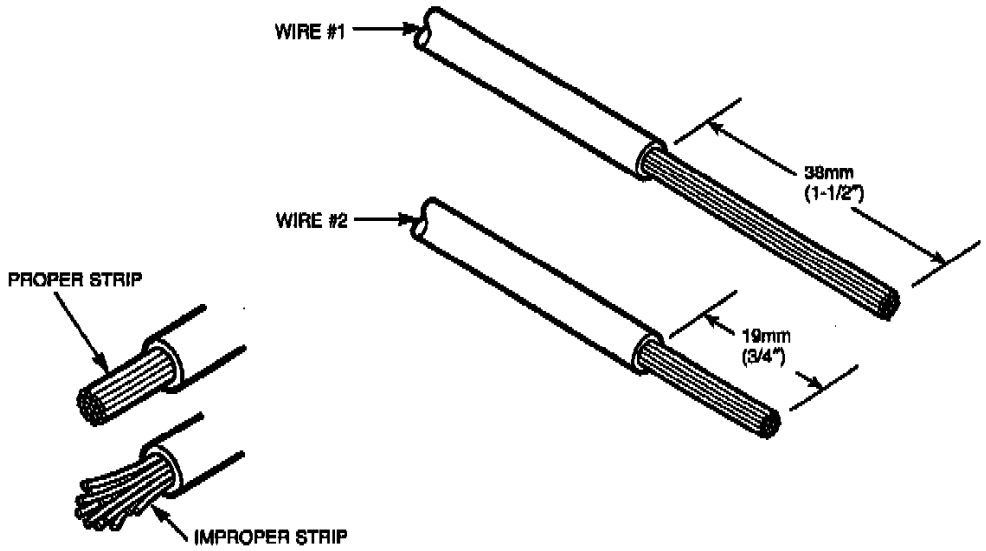

Figure 8

TB-4684-A

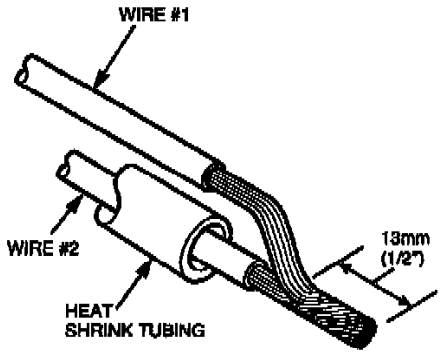

Figure 9

TB-4685-A

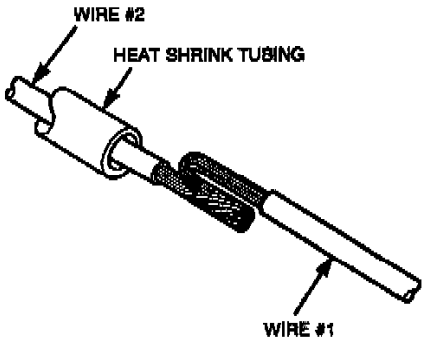

Figure 10

TB-4686-A

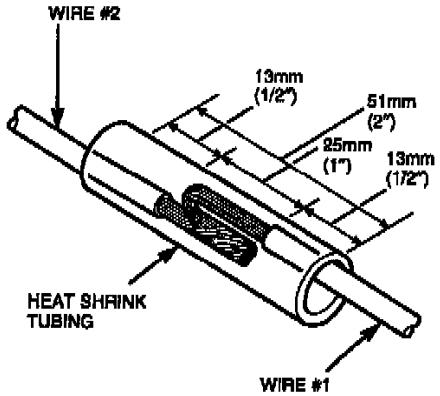

Figure 11

TB-4687-A

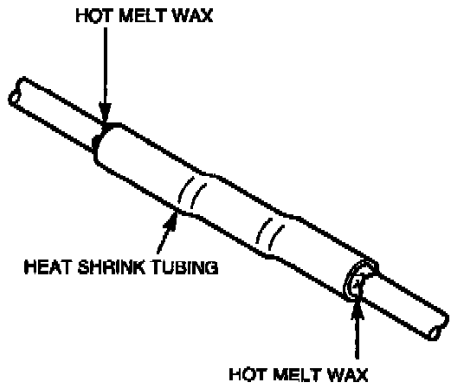

Figure 12

TB-4688-A

5. Slip Heat Shrink Tubing (WT-5627-A) over cut wire as shown in Figures 8-12.

6. Join replacement wire to existing cut wire and twist the ends together as shown in Figures 8-12.

NOTE:
BE SURE HEAT SHRINK TUBE IS ON CUT WIRE BEFORE SPLICING WIRES TOGETHER.

7. Using only 63/37 rosin core solder (do not use acid core), apply solder and heat to spliced wires.

WARNING:
USE ONLY A HEAT GUN. DO NOT USE A HAIR DRYER OR ANY FLAME TO HEAT THE SHRINK TUBE.

8. Position spliced wire so that shrink tubing can be positioned over soldered splice as shown in Figures 8-12.

9. Apply heat to shrink tube.

NOTE:
DO NOT OVERHEAT SHRINK TUBE. HEAT ONLY UNTIL ADHESIVE (HOT SEALANT) FLOWS FROM EACH END OF THE SHRINK TUBING AS SHOWN IN FIGURES 8-12. WHEN THE "HOT SEALANT" FLOWS FROM BOTH ENDS OF THE SHRINK TUBING, THE TUBING HAS BEEN HEATED ENOUGH AND AN ADHESIVE SEAL HAS BEEN FORMED BETWEEN THE HEAT SHRINK TUBE AND THE WIRE INSULATION.

10. Wrap the repaired area with vinyl electrical tape.

NOTE:
DO NOT ALLOW REPAIRED AREA TO COME IN CONTACT WITH ANY METAL SURFACES IN THE AFFECTED AREAS.

11. To avoid future contact with metal surfaces, perform the following:

    a. Remove any existing burrs or sharp edges from metal surfaces that may come in contact with the repaired wiring.

    b. Apply ordinary cloth tape to these areas.

    c. Wrap nicked wiring with vinyl electrical tape.

    d. Make sure wiring retainers are in the proper retaining holes.

    e. Use an appropriate wiring retainer (chicken band) to pull wiring away from metal surfaces.

12. Replace the Air Bag Diagnostic Monitor (F32Z-14B056-A). Refer to the appropriate year Probe Service Manual, Section O1-20B, for removal and installation procedures.

WARNING:
CONNECT THE APPROPRIATE AIR BAG SIMULATOR TO AIR BAG WIRING BEFORE SYSTEM PROVE-OUT IS PERFORMED.

13. Reactivate the air bag system.

14. Perform the system prove-out as follows:

    a. Turn ignition switch from OFF to RUN and visually monitor the air bag warning indicator. The air bag warning indicator will light continuously for approximately 6 seconds and then turn off.

If an air bag system fault is present, the air bag warning indicator will either fail to light, remain lit continuously or flash. The flashing may not occur until approximately 90 seconds after the ignition switch has been turned from OFF to RUN. This is the time required for the air bag diagnostic monitor to complete testing of the system.

If the air bag warning indicator is inoperative and an air bag system fault exists, a tone will sound in a pattern of five (5) sets of five (5) beeps. If this occurs, the air bag warning indicator will need to be serviced before further diagnosis can be done.

NOTE:
THE ABOVE INFORMATION IS ALSO GIVEN IN SECTION O1-20B OF THE APPROPRIATE YEAR PROBE SERVICE MANUAL.

WARNING:
REMOVE THE AIR BAG SIMULATOR AND RECONNECT THE AIR BAG(S) WHEN SYSTEM IS REACTIVATED.

Technical Service Bulletin # **94252** Date: **941212**

Brake Rotor - Machining Equipment/Warranty Information

Article No.
94-25-2

12/12/94

^ BRAKES - AVAILABILITY OF ON-VEHICLE CALIPER - MOUNTED BRAKE ROTOR MACHINING EQUIPMENT AND WARRANTY COVERAGE INFORMATION

^ BRAKE ROTOR MACHINING - AVAILABILITY OF ON-VEHICLE CALIPER - MOUNTED BRAKE ROTOR MACHINING EQUIPMENT AND WARRANTY COVERAGE INFORMATION

FORD:
1979-95 MUSTANG
1981-95 ESCORT
1984-94 TEMPO
1986-95 TAURUS
1988-93 FESTIVA
1989-95 PROBE, THUNDERBIRD
1991-95 CROWN VICTORIA
1994-95 ASPIRE
1995 CONTOUR

LINCOLN-MERCURY:
1979-86 CAPRI
1981-87 LYNX
1984-92 MARK VII
1984-94 TOPAZ
1986-95 SABLE
1988-89 TRACER
1988-95 CONTINENTAL
1989-95 COUGAR
1991-94 CAPRI
1991-95 GRAND MARQUIS, TOWN CAR, TRACER
1993-95 MARK VIII
1995 MYSTIQUE

MERKUR:
1985-88 XR4TI
1988-89 SCORPIO

LIGHT TRUCK:
1984-90 BRONCO II
1984-95 RANGER
1986-95 AEROSTAR
1990-95 BRONCO, E-150, E-250, F-150, F-250
1991-95 EXPLORER
1993-95 VILLAGER
1995 WINDSTAR

This TSB is being republished in its entirety to include the 1994 and 1995 model years.

ISSUE:
On-vehicle caliper-mounted brake rotor machining equipment from Rotunda is now approved for warranty and service use. Brake roughness,

pulsation and steering wheel nibble will occur when rotors wear unevenly (thickness variation). This article specifically addresses brake roughness, pulsation and steering wheel nibble resulting from disc brake rotor thickness variation induced by rotor runout.

ACTION:
Use Rotunda On-Vehicle Brake Lathes 104-00129, 104-00130, 168-00004, or 168-00005 to service vehicles with brake roughness. This method is more effective because it allows machining of the rotor while it is still mounted on the vehicle. This improves the overall run-out of the assembly.

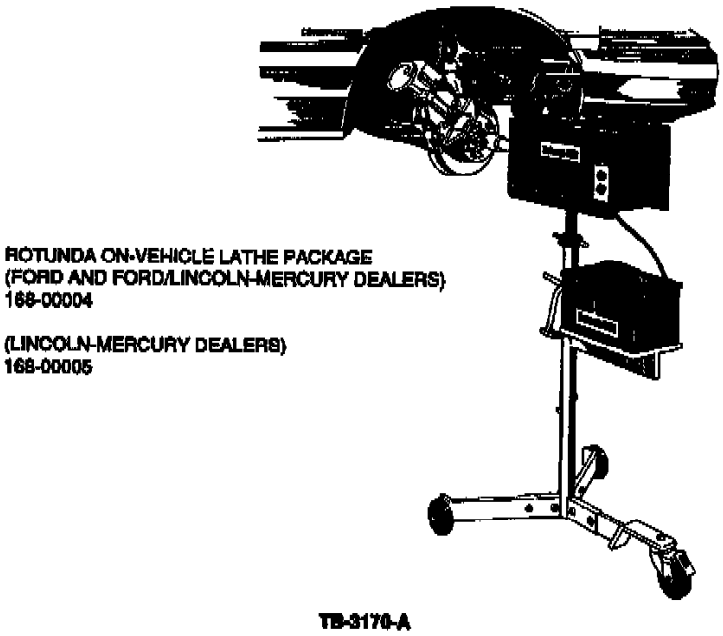

Figure 1

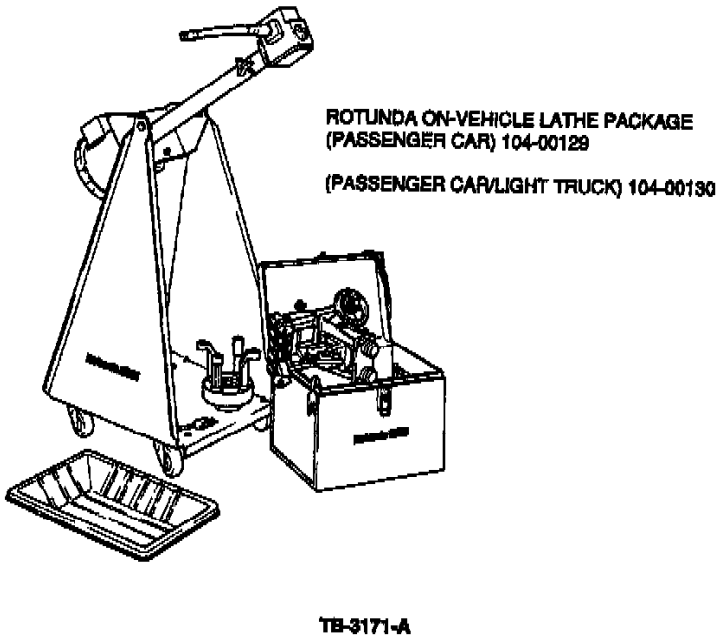

Figure 2

Rotunda on-vehicle caliper-mounted brake rotor machining equipment may correct runout if used according to the equipment manufacturer's instructions. Refer to Figures 1 and 2.

Machining the rotor with the use of a caliper-mounted brake lathe will be an eligible repair under warranty for the vehicles listed.

NOTE:
THERE MAY BE ADDITIONAL MANUFACTURERS OF SIMILAR EQUIPMENT. FORD DOES NOT ENDORSE, INDICATE ANY PREFERENCE FOR, OR ASSUME ANY RESPONSIBILITY FOR EQUIPMENT FROM THESE FIRMS, OR FOR ANY SUCH ITEMS WHICH MAY BE AVAILABLE FROM OTHER SOURCES.

NOTE:
DEALERS THAT HAVE APPROVED ON-VEHICLE BRAKE ROTOR MACHINING EQUIPMENT ARE REQUIRED TO RESURFACE BRAKE ROTORS UNDER THE BUMPER TO BUMPER COVERAGE PERIOD. IF A DEALER HAS THE ON-VEHICLE BRAKE ROTOR MACHINING EQUIPMENT, ROTOR REPLACEMENT WILL ONLY BE ALLOWED WHEN THE ROTOR IS BROKEN OR DOES NOT HAVE ENOUGH MATERIAL TO ALLOW TURNING. SUCH REPLACEMENTS MUST BE AUTHORIZED BY SERVICE

MANAGEMENT.

NOTE:
EXCEPTIONS TO THE LAST STATEMENT ARE REAR ROTORS ON THE TOWN CAR, GRAND MARQUIS, CROWN VICTORIA, MUSTANG AND FRONT ROTORS ON F-350, F-47 AND F-53 HEAVY DUTY LIGHT TRUCKS. ON THESE VEHICLES, ROTORS CANNOT BE MACHINED. SERVICE MANAGEMENT AUTHORIZATION IS NOT REQUIRED FOR THESE EXCEPTIONS.

OTHER APPLICABLE ARTICLES: NONE
SUPERSEDES: 93-13-3
WARRANTY STATUS: INFORMATION ONLY
OASIS CODES: 301000, 302000, 703000

Technical Service Bulletin # **98-5A-11** Date: **980318**

Brakes - Elimination Of Sanding Rotors And Drums

Article No.
98-5A-11

03/18/98

BRAKES - ELIMINATION OF SANDING ROTORS AND
DRUMS - SERVICE TIP

FORD:
1993 FESTIVA
1993-94 TEMPO
1993-97 CROWN VICTORIA, ESCORT, MUSTANG, PROBE, TAURUS, THUNDERBIRD
1994-97 ASPIRE
1995-97 CONTOUR

LINCOLN-MERCURY:
1993-94 TOPAZ
1993-97 CONTINENTAL, COUGAR, GRAND MARQUIS, MARK VIII, SABLE, TOWN CAR, TRACER
1995-97 MYSTIQUE

LIGHT TRUCK:
1993-96 BRONCO
1993-97 AEROSTAR, ECONOLINE, EXPLORER, F SUPER DUTY, F-150-350 SERIES, RANGER, VILLAGER
1995-97 WINDSTAR
1997 EXPEDITION, MOUNTAINEER

ISSUE:
Repeat brake repairs have been performed due to sanding of brake rotors and drums. The sanding of rotors and drums may have been done in reference to a Service Manual or TSB article which prescribes sanding as a repair, however, sanding is neither an effective nor lasting repair for customer complaints of brake roughness or noise.

ACTION:
Machine brake rotors and drums instead of sanding to help reduce brake roughness caused by one of the following conditions:

^ Rotor thickness variation and lateral runout

^ Lining or foreign material build-up

^ Drum out-of-round

NOTE:
DO NOT MACHINE OR SAND ROTORS/DRUMS TO REDUCE OCCASIONAL BRAKE NOISE. IT IS NEITHER AN EFFECTIVE OR LASTING REPAIR.

OTHER APPLICABLE ARTICLES: NONE

SUPERSEDES: 96-22-2

WARRANTY STATUS: INFORMATION ONLY

OASIS CODES: 301000Technical Service Bulletin # **98-5A-5** Date: **980318**

Hub-Mount Brake Rotor Machining Equipment

Article No.

1993 Ford Probe L4-121 2.0L DOHC VIN A MFI

98-5A-5

03/18/98

^ BRAKES - AVAILABILITY OF HUB-MOUNT BRAKE ROTOR MACHINING EQUIPMENT

^ BRAKE ROTOR MACHINING - AVAILABILITY OF HUB-MOUNT BRAKE ROTOR MACHINING EQUIPMENT

FORD:
1993 FESTIVA
1993-94 TEMPO
1993-97 PROBE, THUNDERBIRD
1993-98 CROWN VICTORIA, ESCORT, MUSTANG, TAURUS
1994-97 ASPIRE
1995-98 CONTOUR

LINCOLN-MERCURY:
1993-94 TOPAZ
1993-97 COUGAR
1993-98 CONTINENTAL, GRAND MARQUIS, MARK VIII, SABLE, TOWN CAR, TRACER
1995-98 MYSTIQUE

LIGHT TRUCK:
1993-96 BRONCO
1993-97 AEROSTAR, F SUPER DUTY, F-250 HD, F-350
1993-98 ECONOLINE, EXPLORER, F-150, F-250 LD, RANGER, VILLAGER
1995-98 WINDSTAR
1997-98 EXPEDITION, MOUNTAINEER
1998 NAVIGATOR
1999 SUPER DUTY F SERIES

ISSUE:
Hub-mount brake rotor machining equipment from Rotunda is now approved for warranty and service use. Brake roughness consists of one or more of the following symptoms while braking:

^ Steering wheel vibration/nibble

^ vibration

^ Brake pedal pulsation

Brake roughness is caused by:

^ Uneven rotor wear known as Disc Thickness Variation (DTV). DTV is caused by excessive Lateral Run-Out (LRO) or overtorqued wheel lug nuts

^ Non-uniform lining transfer

ACTION:
Use Rotunda Hub-Mount Lathe / Pro-Cut (201-00002) to service vehicles with brake roughness. The hub-mount lathe removes DTV, lining transfer, and on-vehicle rotor LRO. The hub-mount lathe has the following advantages over caliper-mount lathes:

^ Improved rotor LRO and "dishing" tolerances

^ Ability to machine rear rotors on live axles, except for trucks with dual rear wheels

^ Easier set-up

Refer to the Service Procedure for details.

PART NUMBER	PART NAME
F6AZ-9L494-AA	High Temperature Nickel Anti-Seize Lubricant

1993 Ford Probe L4-121 2.0L DOHC VIN A MFI

OTHER APPLICABLE ARTICLES: NONE

SUPERSEDES: 98-4-5

WARRANTY STATUS: INFORMATION ONLY

OASIS CODES: 301000, 702300, 703000, 703400

Service Procedure

1. Verify concern.

2. Pre-checks to include:

   ^ Check OASIS and TSBs for vehicle-specific brake/vibration concerns

   ^ Visually inspect suspension bushings/ball joints

   ^ Visually inspect tire conditions and pressure

   ^ Check wheel bearing end-play

3. Remove wheel/tire.

4. Remove caliper.

5. For vehicles with two-piece hub/rotor:

   a. Mark rotor and wheel stud for proper indexing during reassembly.

   b. Remove rotor.

NOTE:
THE ROTOR MUST HAVE SUFFICIENT THICKNESS AFTER MACHINING TO BE OVER THE MINIMUM THICKNESS SPECIFICATI

6. Measure rotor thickness and record measurement. Replace rotor if below the minimum thickness specification cast in the rotor.

CAUTION:
DO NOT USE ABRASIVE SANDING DISC SINCE IT WILL REMOVE METAL FROM MOUNTING SURFACES AND ADVERSELY AF

7. Remove corrosion from wheel mounting surface, both rotor mounting surfaces, and hub mounting surface. A die grinder with a Scotchbrite(R)

8. For vehicles with two-piece hub/rotor, reinstall rotor onto hub, aligning with marks from Step 5a.

NOTE:
READ THE ENTIRE OPERATING MANUAL AND VIEW THE VIDEO SHIPPED WITH THE LATHE BEFORE INSTALLING, OPERATI

9. Machine rotors using the Rotunda Hub-Mount Brake Lathe / Pro-Cut (201-00002).

   a. Install hub adapter and silencer belt (where applicable).

   b. Install cutting lathe.

NOTE:
TOTAL INDICATED READING (TIR) TARGET IS 0.000 mm, MAXIMUM IS O.O6 mm (0.003").

   c. Adjust lathe oscillation using a dial indicator.

NOTE:
DEPTH OF CUT SHOULD BE BETWEEN 0.10 AND O.2O mm (0.004 AND 0.008"). LIGHTER CUTS WILL CAUSE THE BIT TO HEAT U

   d. Center cutting head, adjust cutting bits, install chip deflector.

   e. Machine rotor.

   f. Measure and record rotor thickness.

NOTE:
TARGET LRO IS 0.000 mm, MAXIMUM IS O.05 mm (0.002").

g. Install dial indicator, measure and record rotor LRO. Remove dial indicator.

h. Remove lathe and silencer belt.

10. Remove metal shavings.

11. Remove the adapter.

12. For vehicles with two-piece hub/rotors:

a. Remove rotor from hub.

b. Remove metal shavings from hub and rotor mounting surfaces and from ABS sensors.

c. Apply High Temperature Nickel Anti-Seize Lubricant (F6AZ-9L494-AA) to hub mounting surface to prevent future corrosion.

d. Match marks on rotor and hub and assemble rotor to hub.

13. Install pads and calipers.

NOTE:
USING AN IMPACT TOOL WITHOUT AN ACCUTORO(R) SOCKET WILL LEAD TO UNEVENLY TORQUED LUG NUTS. THIS CAUS

14. Install wheels using impact guns equipped with Rotunda AccuTorq(R) sockets. Use a torque wrench on locking lug nuts.

15. Check brake operation before returning to customer.

Support Telephone Numbers

1. Lathe Administration Support: (800) 768-8632

ROTUNDA PRO-CUT LABOR OPERATIONS AND TIMES - CAR									
Operation Number	A	B	C	D	E	F	G	H	I
1102FP (one)	0.7	0.7	0.7	0.7	0.7	0.7	0.7	0.7	0.7
1102FPT (both)	1.1	1.1	1.1	1.1	1.1	1.1	1.1	1.1	1.1
1102GP (one)	N/A	0.7	0.7	0.7	0.7	0.7	0.7	0.6	0.7
1102GPT (both)	N/A	1.0	1.0	1.0	1.1	1.1	1.1	1.0	1.1
2001A25P (one)	0.3	0.3	0.3	0.3	0.3	0.4	0.3	0.4	0.4
2001A25PT (both)	0.6	0.6	0.6	0.6	0.6	0.7	0.6	0.7	0.7
2001A26P (one)	N/A	0.3	0.3	0.3	0.3	0.3	0.3	0.3	0.3
2001A26PT (both)	N/A	0.6	0.6	0.6	0.6	0.6	0.6	0.5	0.6

ROTUNDA PRO-CUT LABOR OPERATIONS AND TIMES - CAR				
Operation Number	J	K	L	M
1102FP (one)	0.7	0.7	0.7	0.7
1102FPT (both)	1.1	1.1	1.1	1.1
1102GP (one)	0.7	0.6	N/A	N/A
1102GPT (both)	1.1	1.0	N/A	N/A
2001A25P (one)	0.3	0.4	0.3	0.3
2001A25PT (both)	0.6	0.7	0.6	0.6
2001A26P (one)	0.3	0.3	N/A	N/A
2001A26PT (both)	0.6	0.5	N/A	N/A

2. Pro-Cut Technical Support: (800) 543-6618 Reference list for Pro-Cut car labor operations:

^ A = Aspire

^ B = Escort/Tracer

^ C = Probe

^ D = Contour/Mystique

^ E = Mustang

^ F = Taurus/Sable

^ G = Thunderbird/Cougar

^ H = Crown Victoria/Grand Marquis

^ I = Continental

^ J = Mark VIII

^ K = Town Car

^ L = Festiva

^ M = Tempo/Topaz

ROTUNDA PRO-CUT LABOR OPERATIONS AND TIMES - LIGHT TRUCK											
Operation Number	AA	AB	AC	AD	AE	AF	AG	AH	AI	AJ	AK
1102FP (one)	0.7	0.7	0.7	0.7	0.7	0.7	0.6	0.6	0.7	0.7	0.8
1102FPT (both)	1.1	1.1	1.0	1.0	1.0	1.0	1.0	1.0	1.0	1.2	1.4
1102GP (one)	N/A	0.7	N/A	N/A	N/A	N/A	N/A	N/A	N/A	N/A	N/A
1102GPT (both)	N/A	1.1	N/A	N/A	N/A	N/A	N/A	N/A	N/A	N/A	N/A
2001A25P (one)	0.4	0.4	0.3	0.3	0.3	0.3	0.3	0.3	0.3	0.4	0.4
2001A25PT (both)	0.7	0.7	0.6	0.6	0.6	0.6	0.5	0.5	0.6	0.7	0.8
2001A26P (one)	N/A	0.3	N/A	N/A	N/A	N/A	N/A	N/A	N/A	N/A	N/A
2001A26PT (both)	N/A	0.6	N/A	N/A	N/A	N/A	N/A	N/A	N/A	N/A	N/A

ROTUNDA PRO-CUT LABOR OPERATIONS AND TIMES - LIGHT TRUCK						
Operation Number	AL	AM	AN	AO	AP	AQ
1102FP (one)	N/A	0.7	0.6	0.7	0.6	N/A
1102FPT (both)	N/A	1.0	1.0	1.0	1.0	N/A
1102GP (one)	N/A	N/A	N/A	N/A	N/A	N/A
1102GPT (both)	N/A	N/A	N/A	N/A	N/A	N/A
2001A25P (one)	N/A	0.3	0.3	0.3	0.3	N/A
2001A25PT (both)	N/A	0.6	0.5	0.6	0.5	N/A
2001A26P (one)	N/A	N/A	N/A	N/A	N/A	N/A
2001A26PT (both)	N/A	N/A	N/A	N/A	N/A	N/A

Reference list for Pro-Cut light truck labor operations:

^ AA = Villager

^ AB = Windstar

^ AC = Aerostar 4X2

^ AD = Aerostar 4X4

^ AE = Ranger 4X2

^ AF = Ranger 4X4

^ AG = Explorer/Mountaineer 4X2

^ AH = Explorer/Mountaineer 4X4

^ AI = Econoline

^ AJ = F-250 HD/F-350 4X2

^ AK = F-250 HD/F-350 4X4

^ AL = F-Super Duty

^ AM = F-150/F-250 LD 4X2

^ AN = F-150/F-250 LD 4X4 And Bronco

^ AO = Expedition/Navigator 4X2

^ AP = Expedition/Navigator 4X4

^ AQ = Super Duty F Series Technical Service Bulletin # **9523** Date: **950130**

Electronic Fuel Gauge - Erratic Readings

Article No.
95-2-3

01/30/95

^ GAUGE - ERRATIC DISTANCE-TO-EMPTY AND FUEL GAUGE READINGS - VEHICLES BUILT BEFORE 1/1/94

^ GAUGE - FUEL - ELECTRONIC - "CO" DISPLAYED IN ELECTRONIC CLUSTER WITH TWO TOP/BOTTOM BARS HIGHLIGHTED -

FORD:
1986-92 TAURUS
1989-94 PROBE
1990-94 CROWN VICTORIA
1993-94 THUNDERBIRD

LINCOLN-MERCURY:
1985-92 MARK VII
1986-94 CONTINENTAL, SABLE
1990-94 GRAND MARQUIS, TOWN CAR
1993-94 COUGAR, MARK VIII

LIGHT TRUCK:
1990-94 AEROSTAR

ISSUE:
There may be erratic Distance-To-Empty (DTE) and fuel gauge readings, or circuit open "CO" displayed in the electronic cluster with two (2) top/bo

PART NUMBER	PART NAME
E5LY-9275-B	Fuel Sender Assembly (1986-92 Mark VII)
F32Z-9275-C	Fuel Sender Assembly (1989-94 Probe)
F3AZ-9275-G	Fuel Sender Assembly (1990-94 Crown Victoria/Grand Marquis)
F3LY-9275-B	Fuel Sender Assembly (1993-94 Mark VIII)
F3VY-9275-B	Fuel Sender Assembly (1990-94 Town Car With Electronic Cluster)
F3OY-9H307-A	Fuel Pump/Sender Assembly (1986-89 Taurus/Sable, 1988-94 Continental With 18 Gallon Fuel Tank)
F3DZ-9H307-E	Fuel Pump/Sender Assembly (1990-92 Taurus/1990-94 Sable With EIC)
F3SZ-9H307-C	Fuel Pump/Sender Assembly (1993-94 Thunderbird/Cougar)
F3SZ-9H307-D	Fuel Pump/Sender Assembly (1993 Thunderbird SC)
F4SZ-9H307-D	Fuel Pump/Sender Assembly (1994 Thunderbird SC)
F39Z-9H307-A	Fuel Pump/Sender Assembly (1990-94 Aerostar)

ACTION:
Install a revised sender assembly or fuel pump/sender assembly. Refer to the appropriate vehicle Service Manual, Fuel System Section, for removal

OTHER APPLICABLE ARTICLES: NONE
WARRANTY STATUS:
Eligible Under The Provisions Of Bumper To Bumper Warranty Coverage For 1992-94 Models And 1991 Lincolns, Major Component Warranty Co

OPERATION	DESCRIPTION	TIME
950203A	Replace Fuel Gauge Sending Unit - Town Car	1.5 Hrs.
950203B	Replace Fuel Gauge Sending Unit - Crown Victoria/Grand Marquis	0.9 Hr.
950203C	Replace Fuel Gauge Sending Unit - Taurus/Sable	1.0 Hr.
950203D	Replace Fuel Gauge Sending Unit - Mark VIII	1.2 Hrs.

1993 Ford Probe L4-121 2.0L DOHC VIN A MFI

950203E	Replace Fuel Gauge Sending Unit - Probe	1.1 Hrs.
950203F	Replace Fuel Gauge Sending Unit - Thunderbird	1.2 Hrs.
950203G	Replace Fuel Gauge Sending Unit Mark VII	0.9 Hr.
950203H	Replace Fuel Gauge Sending Unit Aerostar	1.2 Hrs.

DEALER CODING

BASIC PART NO.	CONDITION CODE
9275/9H307	G25

OASIS CODES: 204000, 204100, 206000

Technical Service Bulletin # **93208** Date: **930929**

Oil Pressure Gauge - Reads Low

Article No.
93-20-8

09/29/93

^ GAUGE - OIL PRESSURE - READS IN LOW RANGE

^ GAUGE - OIL PRESSURE - READS ON LOW SIDE OF THE NORMAL RANGE

FORD:
1993 PROBE

ISSUE:
The oil pressure gauge may read LOW or on the low side of the NORMAL range because of the gauge calibration.

ACTION:
Install a new oil pressure gauge which has been recalibrated to read in the center of the NORMAL range. Refer to the following procedure for service details.

1. Warm the engine up to full operating temperature and verify the low oil pressure reading concern at idle.

2. If the oil pressure gauge reads in the LOW range, check the engine oil pressure using a calibrated mechanical oil pressure gauge. Verify that oil pressure meets specifications per the Service Manual references noted below.

   ^ For the 2.0L engine refer to the 1993 Probe Service Manual, Page 03-01A-5.

   ^ For the 2.5L engine refer to the 1993 Probe Service Manual, Page 03-01B-10.

PART NUMBER	PART NAME	CLASS
F42Z-9B308-A	Oil Pressure Gauge (With Door Ajar Warning)	C
F42Z-9B308-B	Oil Pressure Gauge (Without Door Ajar Warning)	C

   a. If the oil pressure is within specification, replace the oil pressure gauge with the new recalibrated oil pressure gauge. Refer to the 1993 Probe Service Manual, Section 13-04, for the removal and installation procedures. Refer to the Parts Block in this article for correct parts usage.

   b. If the oil pressure is not within specification, proceed as follows:

      ^ For the 2.0L engine refer to the 1993 Probe Service Manual, Section 03-01A-5, for further diagnosis.

      ^ For the 2.5L engine refer to the 1993 Probe Service Manual, Section 03-01B-10, for further diagnosis.

3. If the oil pressure gauge reads on the low side of the NORMAL range, replace the oil pressure gauge with the new recalibrated oil pressure gauge. Refer to the 1993 Probe Service Manual, Section 13-04-10, for the removal and installation procedures. Refer to the Parts Block in this article for correct parts usage.

4. Confirm that the concern is resolved.

OTHER APPLICABLE ARTICLES: NONE

1993 Ford Probe L4-121 2.0L DOHC VIN A MFI

WARRANTY STATUS:
Eligible Under Bumper To Bumper Warranty Coverage

OPERATION	DESCRIPTION	TIME
932008A	Test And Replace Oil Pressure Gauge	1.2 Hrs.

DEALER CODING

BASIC PART NO.	CONDITION CODE
9B308	79

OASIS CODES: 204000, 204200, 206000, 401000

Technical Service Bulletin # **9319B20** Date: **930929**

Instrument Cluster Gauges - Test Procedure Revised

Article No.
93-19B-20

09/29/93

SERVICE MANUAL - 1993 - PAGE 13-05-21 - TACHOMETER, OIL PRESSURE, COOLANT TEMPERATURE GAUGES - PINPOINT TEST STEP TG9 REVISED

FORD:
1993 PROBE

ISSUE:
Pinpoint Test Step TG9 makes incorrect references to the 16-pin instrument cluster connector and 16-pin instrument cluster; the actual connector and cluster affected are 14-pin. Page 13-05-21 of the 1993 Probe Service Manual is affected.

DIAGNOSIS AND TESTING (Continued)

TEST STEP		RESULT	ACTION TO TAKE
TG8	CHECK SIGNAL FROM GAUGE ENGINE COOLANT TEMPERATURE SENDER		
	• Key OFF. • Locate and disconnect the gauge engine coolant temperature sender connector. • Connect Rotunda Instrument Gauge System Tester 021-00055 or equivalent between the gauge engine coolant temperature sender connector and ground. • Key ON. • Adjust the instrument gauge system tester to the resistances shown. 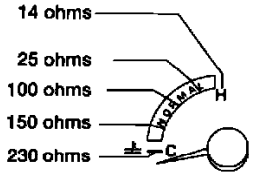 Temperature Gauge K18180-B • **Is the temperature gauge working properly?**	Yes No	REPLACE the gauge engine coolant temperature sender. GO to **TG9**.
TG9	CHECK WIRE BETWEEN INSTRUMENT CLUSTER AND GAUGE ENGINE COOLANT TEMPERATURE SENDER		
	• Key OFF. • Disconnect the 14-pin instrument cluster connector. • Disconnect the gauge engine coolant temperature sender connector. • Measure the resistance of the "BK/BL" wire between the 14-pin instrument cluster connector and the gauge engine coolant temperature sender connector. • Measure the resistance of the "BK/BL" wire between the 14-pin instrument cluster and ground. • **Is the resistance less than 5 ohms between the instrument cluster connector and the gauge engine coolant temperature sender connector, and greater than 10,000 ohms between the instrument cluster and ground?**	Yes No	GO to **TG10**. SERVICE the "BK/BL" wire.
TG10	CHECK INSTRUMENT CLUSTER CIRCUIT TO TEMPERATURE GAUGE		
	• Key OFF. • Disconnect and remove the instrument cluster. • Measure the resistance of the circuit between the instrument cluster pin 1E and the temperature gauge "T" screw terminal. • **Is the resistance less than 5 ohms?**	Yes No	REPLACE the temperature gauge. REPLACE the instrument cluster printed circuit board.

REMOVAL AND INSTALLATION

Tachometer

Removal

1. Remove the instrument cluster. Refer to Section 13-01.
2. Remove the instrument cluster printed circuit board. Refer to Section 13-01.

Revised 8/93 1993 Probe Apr 92

ACTION:
Refer to the page in this TSB article for the revised information.

OTHER APPLICABLE ARTICLES: NONE
WARRANTY STATUS: INFORMATION ONLY
OASIS CODES: 290000

Technical Service Bulletin # **9319B15** Date: **930929**

Headlamp Retractor - Schematic Revision

Article No.
93-19B-15

1993 Ford Probe L4-121 2.0L DOHC VIN A MFI

09/29/93

ELECTRICAL/VACUUM TROUBLESHOOTING MANUAL - 1993 - PAGE 85-2 - HEADLAMPS ELECTRICAL SCHEMATIC - RIGHT AND LEFT HEADLAMP RETRACTOR ILLUSTRATIONS REVISED

FORD:
1993 PROBE

ISSUE:
Left and Right Headlamp Retractor electrical schematics, shown on Page 85-2 (Headlamps) of the 1993 Probe EVTM, require revision.

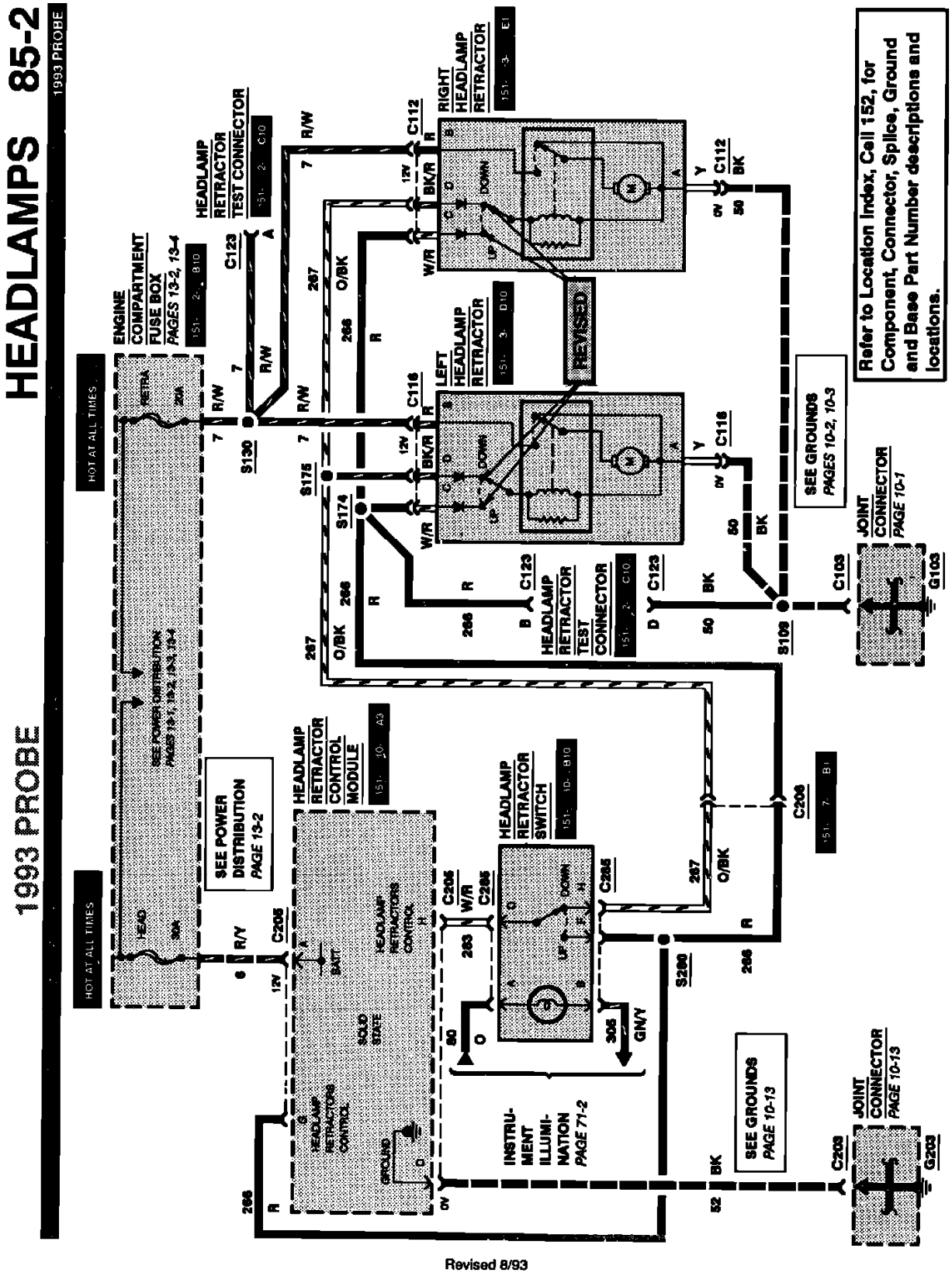

ACTION:
Refer to the page in this TSB article for the revised information.

1993 Ford Probe L4-121 2.0L DOHC VIN A MFI

OTHER APPLICABLE ARTICLES: NONE
WARRANTY STATUS: INFORMATION ONLY
OASIS CODES: 290000

Technical Service Bulletin # **93173** Date: **930818**

Air Bag - Lamp ON/Module Displays Code 34

Article No.
93-17-3

08/18/93

^ AIR BAG - MODULE DISPLAYS SERVICE CODE 34 - VEHICLES BUILT THROUGH 9/30/93

^ LAMP - AIR BAG LIGHT COMES ON AND MODULE DISPLAYS SERVICE CODE 34 - VEHICLES BUILT THROUGH 9/30/93

FORD:
1993 PROBE

This TSB article is being republished in its entirety to correct the part number suffixes and part descriptions.

ISSUE:
The air bag light may come on and the module display service code 34 because the connector insertion bar is damaged or bent. The air bag system is equipped with a shorting bar in connector C257. This mechanism prevents the air bag module from deploying while service work is being performed. The insertion bar opens the shorting bar when the connector is together to activate the system. The insertion bar may become damaged or bent during the assembly or reassembly process.

ACTION:

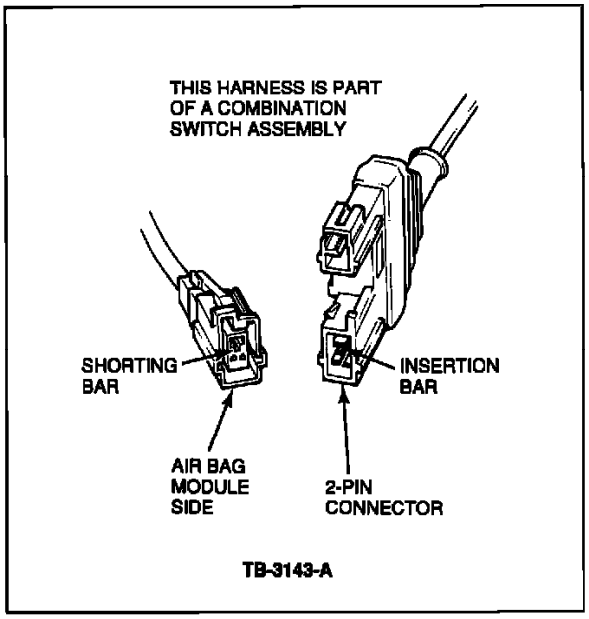

Figure 1

Check the C257 connector in the steering column for a bent or damaged insertion bar, Figure 1. If it is damaged, install a new combination switch assembly which includes the C257 connector.

PART NUMBER	PART NAME	CLASS
F32Z-13K359-D	Combination Switch With Intermittent Wiper	B
F32Z-13K359-C	Combination Switch Without Intermittent Wiper	B

Parts Block

SUPERSEDES: 93-15-4
WARRANTY STATUS:
Eligible Under Bumper To Bumper Warranty Coverage

OPERATION	DESCRIPTION	TIME
931703A	Inspect And Replace	0.8 Hr.

Combination Switch

DEALER CODING

BASIC PART NO.	CONDITION CODE
13K359	97

OASIS CODES: 104000, 206000

Technical Service Bulletin # **94255** Date: **941212**

Antitheft System - Recap of TSB's/Service Tips

Article No.
94-25-5

12/12/95

ANTI-THEFT PROTECTION SYSTEM - RECAP OF TSB'S - SERVICE TIPS

FORD:
1989-91 THUNDERBIRD 1993 PROBE

LINCOLN-MERCURY:
1989-91 COUGAR
1991-94 TOWN CAR
1993-94 MARK VIII

LIGHT TRUCK:
1992-94 ECONOLINE
1993-94 BRONCO
1993-95 EXPLORER
1994 F-150-350 SERIES
1995 RANGER

ISSUE:
An Anti-Theft System TSB recap has been developed for service use. This article includes the following topics:

^ (A) Anti-Theft Warning - Service Tips

^ (B) Anti-Theft Warning - Inadvertent Alarm Activation

^ (C) Anti-Theft Warning - Erratic Door Lock Operation

ACTION:
If Anti-Theft System repair is required, refer to the procedures and references for service details.

OTHER APPLICABLE ARTICLES:
90-16-3, 92-21-1, 93-12-7, 93-19-5, 93-19-6, 93-6-2

WARRANTY STATUS:
Eligible Under The Provisions Of Bumper To Bumper Warranty Coverage For 1992-94 Model Year Vehicles And 1991 Town Car, Basic Warranty Coverage For All Other Model Years

OPERATION	DESCRIPTION	TIME
942505A	Replace Ignition Lock Cylinder Sensor - 1991-94 Town Car, 1993-94 Mark VIII	0.4 Hr.
942505B	Replace Ignition Lock Cylinder Sensor - 1992-94 Econoline, 1994 F-Series	0.3 Hr.
942505C	Repair Both Door Courtesy Lamp Switches - F-Series/Bronco	0.3 Hr.
942505D	Replace Anti-Theft Module - Explorer	0.6 Hr.

DEALER CODING

BASIC PART NO.	CONDITION CODE
19A438	08

OASIS CODES:
112000, 203000, 203200, 204000, 205000,206000

(A) Anti-Theft Warning - Service Tips

(A-1) - AFTERMARKET ALARM MAY PREVENT SPEED CONTROL FUNCTION

ISSUE:
When installing the accessory (Dealer-installed) Remote Keyless Entry Kit (or any Aftermarket system), particular attention must be taken when connecting the starter interrupt feature. Both wires which originate from the same terminal of the ignition switch must be cut and crimped into the butt connectors as shown in the installation instructions. Incorrect connection to the start circuit can cause inoperative vehicle speed control and/or no self test codes from the vehicle self test diagnostic system.

ACTION:
Refer to installation instructions for wire color codes, or call 1-800-FORD KEY for assistance with Ford Dealer-installed accessory Remote Keyless Entry Kit assistance.

(A-2) - TIME ALARM SOUND CHANGE

ISSUE:
This change was incorporated to meet with New York State legislation requirements governing the operation of alarm sirens.

ACTION:
1993-94 all NAAO vehicles RKE-equipped will, as of May 1, 1993, incorporate a software change that will shorten the length of time that the alarm will stay on when the panic button is pushed once. Alarm will sound for no more than 2 minutes 45 seconds. The time duration was 3 minutes.

(A-3) - INOPERATIVE THEFT WARNING SYSTEM LAMP: - 1993 PROBE

ISSUE:
Inoperative theft warning system may be caused by an incorrect switch input from either door lock cylinder, hood or liftgate latch switch.

ACTION:
To test the switches, leave the driver's door open and arm the system. If all switches are OK, the Anti-Theft Lamp will light. If one switch value is incorrect, the lamp will not light. Cycle the hood, hatch lock and both door locks using the key. As each switch is cycled, the lamp will flash OFF/ON. Any switch that does not flash the lamp indicates a concern with the switch or its wiring between the CPU and the switch.

(B) Anti-Theft Warning - Inadvertent Alarm Activation

(B-1) - ANTI-THEFT PROTECTION SYSTEM - ALARM SOUNDS INADVERTENTLY - HOOD SWITCH TOO LOW OR DOOR SWITCH SHORTED - 1993 MARK VIII

Article 93-19-5

ISSUE:
This article deals with door lock motors that may run continuously, causing a buzzing noise. The customer will be able to exit the vehicle, but may be locked out of the vehicle with the engine running. There may be continuous "pull-down" of door locks or the alarm may sound inadvertently.

Potential Causes:

^ Water entry into the luggage compartment in several areas which leaks onto/into the Remote Keyless Entry (RKE) module. This creates an electrical short causing false alarm horns.

^ Electrical noise in the door ajar switch causes a signal to be sent to the RKE module. Water leakage into the door ajar switch produces corrosion and a short condition which activates the alarm system.

^ A hood switch that is positioned too low causes activation of the alarm system.

ACTION:
Determine if the alarm is a panic or anti-theft alarm. Follow diagnostics, replace RKE module and/or door hood switch, door ajar switch.

(B-2) - ANTI THEFT PROTECTION SYSTEM - ALARM SOUNDS IN ERROR - HOOD SWITCH POSITIONED TOO LOW - VEHICLES BUILT BEFORE 2/15/93 - 1993 MARK VIII

Article 93-19-6

ISSUE:
This article deals with the concern of false activation caused by a mispositioned hood switch.

ACTION:

Install a revised hood switch which allows for proper positioning on the sheet metal.

(B-3) - ANTI-THEFT PROTECTION SYSTEM - ALARM ACTIVATED IN ERROR - 1993 MARK VIII

Article 93-12-7

ISSUE:
The anti-theft protection system alarm may be activated in error because water may have entered the door ajar switch.

ACTION:
Install new door ajar switches which include double O-rings and improved lubrication to minimize water entry.

(B-4) - LOCK - TRUNK - BENT CYLINDER TAB FALSELY ACTIVATES ALARM - 1989-91 THUNDERBIRD, CONTINENTAL, MARK VII, TOWN CAR, COUGAR

Article 92-21-1

ISSUE:
The anti-theft alarm system may be activated in error because of a bent trunk lock switch tab in the lock cylinder.

ACTION:
Install a new trunk cylinder by using the service procedures as outlined in the article.

NOTE:
SERVICE PART HAS NOW BEEN REVISED TO F4VY-5443507-A.

(B-5) - ALARM SYSTEM - ANTI-THEFT SYSTEM DIAGNOSTIC PROCEDURE - VEHICLES BUILT AFTER 5/22/90 - 1990 THUNDERBIRD, COUGAR, TOWN CAR

Article 90-16-3

ISSUE:
An intermittent no crank condition may be caused by the anti-theft module. A new anti-theft module featuring additional diagnostic capabilities is now available for service. It has the ability to diagnose shorts in the door disarm circuit and the trunk lock cylinder circuit. It also can be used as a service replacement part for 1990 vehicles built prior to 5/22/90.

ACTION:
If service is required, install a new design level anti-theft module (F1VY-19A366-A). Use the procedures as outlined in the article to diagnose the Anti-Theft System. This procedure should be completed before continuing the diagnostic procedures provided in the Service Manual, Section 44-20, for the applicable vehicle.

(B-6) - ANTI-THEFT PROTECTION SYSTEM - ALARM SOUNDS INADVERTENTLY - HIGH RESISTANCE IN THE IGNITION TAMPER SWITCH CAUSES ACTIVATION - 1991-94 TOWN CAR (BUILT PRIOR TO 1/26/94), 1993-94 MARK VIII (BUILT PRIOR TO 1/26/94), 1992-94 ECONOLINE (1994 ECONOLINE BUILT PRIOR TO 9/7/93), 1994 F-SERIES (BUILT PRIOR TO 9/3/93)

ISSUE:
Vehicles may experience false activation of the anti-theft alarm, inadvertent activation with alarm system deactivated, or activation of the alarm system with the key in the ignition. If the condition occurs when the system is not activated, the cause is most likely in the ignition sensor to cylinder/housing contact area. Some vehicles may develop corrosion between the sensor and the cylinder housing which increases the resistance value of the sensor and activates the alarm.

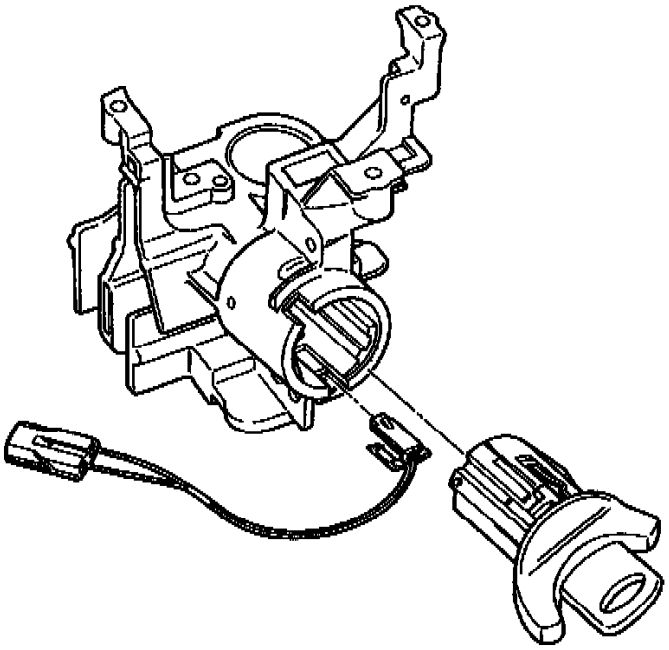

Figure 1

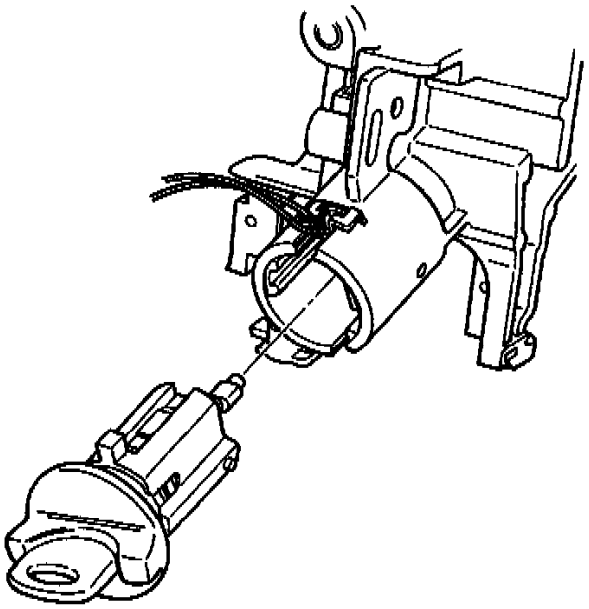

Figure 2

ACTION:
We recommend, that in addition to correcting any problems found under normal diagnostics, you replace the Ignition Keylock Cylinder Sensor with the new "one-piece" design sensor, and clean the ignition keylock cylinder and Steering Column Housing surfaces (refer to Figures 1 and 2).

To begin the repair:

NOTE:
REFER TO THE SERVICE MANUAL FOR SERVICE PROCEDURES THAT APPLY TO YOUR SPECIFIC VEHICLE.

1. Disconnect the battery.

2. Follow the procedures in the appropriate Service Manual to remove the ignition key lock cylinder sensor.

3. Remove the sensor from the housing.

4. Cut the black ground wire (attached to the "OLD" sensor) that is fastened to the steering column housing underneath the clockspring assembly.

5. Clean the surface of the key lock cylinder groove where the sensor contacted the cylinder and clean the contact area of the steering column housing with a steel wool pad to provide clean surfaces for the new sensor.

6. Install a "NEW" ignition keylock cylinder sensor (see chart).

7. Reinstall the assemblies as outlined in the Service Manual.

8. Verify proper system operation.

NOTE:
1994 TOWN CARS BUILT AFTER 1/26/94 AND F-SERIES BUILT AFTER 9/7/94 DO NOT HAVE THE IGNITION KEYLOCK CYLINDER SENSOR. THEY USE A MODIFIED ANTI-THEFT MODULE WHICH IGNORES THE SENSOR. 1994 MARK VIII BUILT FROM 1/27/94 THROUGH 11/6/94 AND 1994 ECONOLINE BUILT FROM 9/8/94 THROUGH 11/13/94 DO NOT HAVE THE IGNITION KEYLOCK CYLINDER SENSOR. THEY USE A MODIFIED ANTI-THEFT MODULE WHICH IGNORES THE SENSOR.

PART NUMBER	PART NAME	CLASS
F4LY-19A438-A	Ignition Tamper Sensor - Town Car (1991-1/26/94) And Mark VIII (1993-1/26/94)	C
F5TZ-19A438-B	Ignition Tamper Sensor - F-Series (1994) And Econoline (1992-9/3/93)	C

Parts Block

(B-7) - 1994 F-SERIES/BRONCO - INADVERTENT ACTIVATION OF THE ANTI-THEFT SYSTEM

ISSUE:
Water intrusion into the Right or Left Front Courtesy Lamp Switch (refer to EVTM) of the Anti-Theft System may cause inadvertent activation of the system.

ACTION:
To correct this condition you should:
1. Remove the switch from the door.

2. Place a small amount of silicone sealant on the back of the connector where the wires exit the connector (enough sealant should be used to seal the connector and prevent further water intrusion).

3. Tape wrap the connector and about 1.5" (38 mm) of the wires beyond the switch connector.

4. Reinstall the switch.

5. Verify the repair.

(B-8) - 1993-94 "LIMITED" EXPLORER - INADVERTENT ACTIVATION OF THE ANTI-THEFT SYSTEM

ISSUE:
Vehicles built prior to 10/1/94 may have a concern with water entry into the area of the left rear quarter panel. Water can leak into the Anti-Theft Module and create inadvertent activation of the Anti-Theft Warning System, (lights flash and horn sounds) without ignition lockout.

ACTION:
To correct this condition, you should follow normal diagnostics as outlined in the appropriate Service Manual, Section 13-11. If the concern cannot be isolated, or diagnostics lead to replacement of the module, replace the Anti-Theft Module with part number F2VY-19A366-A for 1993 Model Year, and part number F4TZ-19A366-B for 1994 Model Year (these modules contain a water flap to resist water and prevent water intrusion).

PART NUMBER	PART NAME	CLASS
F2VY-19A366-A	Anti-Theft Module (1993)	B
F4TZ-19A366-B	Anti-Theft Module (1994)	C

(B-9) - 1995 EXPLORER/RANGER REPLACEMENT OF ANTI-THEFT IGNITION KEYLOCK CYLINDER SENSOR FOR 1995 EXPLORER BUILT PRIOR TO 10/2/94 AND 1995 RANGER BUILT PRIOR To 11/20/94

ISSUE:
Replacement of the anti-theft Ignition Keylock Cylinder Sensor on 1995 Explorer/Ranger may cause inadvertent alarm activations due to sensor circuit and ground circuits being reversed.

ACTION:

When the anti-theft Ignition Keylock Cylinder Sensor (F5TZ-19A438-A) is replaced for 1995 Explorers built prior to 10/2/94 and 1995 Rangers built prior to 11/20/94, ensure the Green/White wire of the sensor mates to the Green/White wire of the vehicle wiring harness and the Black/White wire of
the sensor mates to the Black/White wire of the harness. If the wires do not match, remove the wedge on the Ignition Keylock Cylinder Sensor,

remove both wire terminals, and re-install wires to match.

(C) Anti-Theft Warning - Erratic Door Lock Operation

(C-1) - REMOTE KEYLESS ENTRY SYSTEM - ERRATIC DOOR LOCK OPERATION - 1993 MARK VII

Article 93-6-2

ISSUE:
Water leaks may occur at the upper back/lower backlight corner area resulting in water in the trunk or on the remote keyless entry module. This may cause erratic door lock operation. These leaks are caused by voids in urethane sealer to the backlight, or misplaced seals on the package tray or quarter panel.

ACTION:
Use the procedures as outlined in the article to eliminate water leaks in the upper back area.Technical Service Bulletin # **9218B1** Date: **920904**

TSB Description

Article No.
92-18B-1

09/04/92

POWERTRAIN CONTROL/EMISSIONS DIAGNOSIS MANUAL - NON-NAAO - 1993 - SECTION 6B - EEC PINPOINT TEST PROCEDURES REVISED

FORD:
1993 ESCORT, PROBE

LINCOLN-MERCURY:
1993 CAPRI, TRACER

ISSUE:
EEC Pinpoint Test procedures shown in Section 6B of the 1993 Powertrain Control/Emissions Diagnosis Manual, Non-NAAO, require revision. These pages are affected: 6B-3, 71, 75, 116, 143 and 181.

ACTION:
Refer to the pages in this TSB article for the revised information.

OTHER APPLICABLE ARTICLES: NONE
WARRANTY STATUS: INFORMATION ONLY
OASIS CODES: 690000

EEC Pinpoint Tests

1.3L and 1.8L MTX Breakout Box Adapter 007-00057

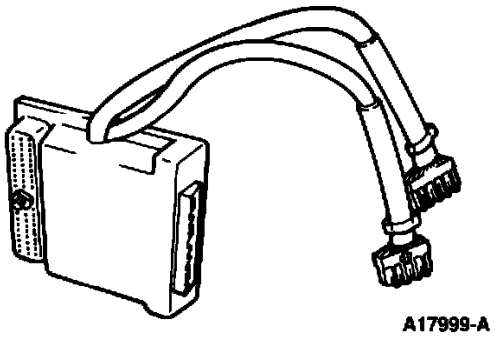

A17999-A

1.6L Breakout Box Adapter 007-00038

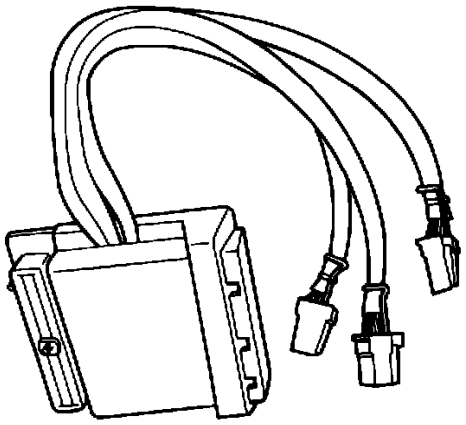

A18000-A

NOTE: The Breakout Box Adapter T92C-6000-AH has an A / B position selector switch. Make sure that the switch is in the correct position for each test step, as specified in the Circuit Data Sheets for EEC Pinpoint Tests ROC, SCG and 4EAT Pinpoint Test SCP. If no switch position is given then switch can be in either position.

Revised 9/92

EEC Pinpoint Tests

1.8L 4EAT, 2.0L 4EAT and 2.5L Breakout Box Adapter T92C-6000-AH

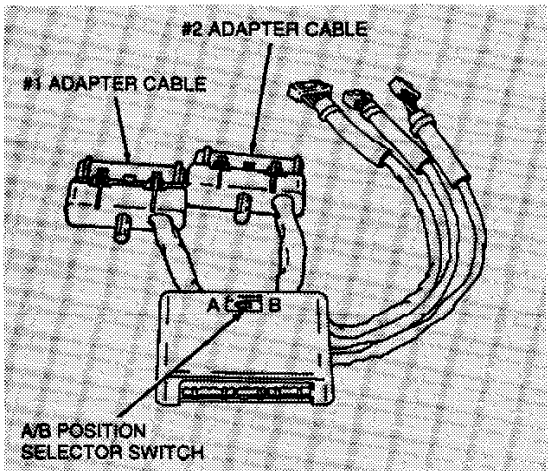

Engine	Adapter Cable
1.8L 4EAT	#2 Adapter Cable
2.0L 4EAT	#1 Adapter Cable
2.5L	#2 Adapter Cable

A18150-A

Revised 9/92

EEC Pinpoint Tests	All Engines	ROC

Data Sheet

NOTE: The Breakout Box Adapter T92C-6000-AH has an A/B position selector switch. Make sure that the switch is in the correct position for each test step, as specified in the Circuit Data Sheet. If no switch position is given then switch can be in either position.

CIRCUIT DATA SHEET

Relay (SIG)	Engine	PCM Pin	BOB Pin	Wire Color	Function
ACR (A/C Relay)	2.0L 4EAT 2.5L	1S 1L	14 10	GN/BK GN/BK	PCM grounds ACR wire to turn on A/C system, when A/C is selected.
FPR (Fuel Pump Relay)	2.0L 4EAT 2.5L	3L 3T	8 52B	LG LG	PCM grounds FPR wire to turn on Fuel Pump while cranking engine or while engine is running.
HCFAN (High Condenser Fan Relay)	2.5L	2P	54	BL/GN	PCM grounds HCFAN wire to turn on High Condenser Fan.
HFAN (High Cooling Fan Relay)	2.0L 4EAT 2.5L	3I 2P	54 54	BL/GN BL/GN	PCM grounds HFAN wire to turn on High Cooling Fan.
LCFAN (Low Condenser Fan Relay)	2.5L	3N	53A	BL/O	PCM grounds LCFAN wire to turn on Low Condenser Fan.
LFAN (Low Cooling Fan Relay)	2.0L 4EAT 2.5L	3G 3L	55 55	BK/GN R/W	PCM grounds LFAN wire to turn on Low Cooling Fan.
WAC (Wide-Open Throttle A/C Cutoff Relay)	1.3L 1.8L MTX 1.8L 4EAT	1J 1J 1L	54 54 10	GN/Y BL/BK BL/BK	PCM opens ground to cutoff A/C clutch during start and wide open throttle driving.

	TEST STEP	RESULT ▶	ACTION TO TAKE
ROC1	PERFORM RELAY CLICK TEST		
	WARNING: FANS WILL OPERATE WHEN HCFAN, HFAN, LCFAN, OR LFAN ARE GROUNDED. • Key OFF. • Install breakout box (leave PCM disconnected). • Locate the relay in question. • Key ON. • Feel and/or listen to relay in question while grounding relay Test Pin. • **Does relay click?**	Yes ▶ No ▶	If sent here from Quick Test Step QT5 or QT6, REPLACE the PCM. If sent here from Quick Test Step QT11, RETURN to Diagnostic Routines. GO to ROC2.

EEC Pinpoint Tests	All Engines	SCG

Data Sheet

NOTE: The Breakout Box Adapter T92C-6000-AH has an A/B position selector switch. Make sure that the switch is in the correct position for each test step, as specified in the Circuit Data Sheet. If no switch position is given then switch can be in either position.

CIRCUIT DATA SHEET

Engine	SIG	PCM Pin	BOB Pin	Wire Color	Diagnostic Trouble Code
1.3L	CANP	2X	31	R	26
	IAC	2W	41	R/BK	34
	BANK1	2U	58	GN/Y	—
	BANK2	2V	59	GN/BK	—
1.6L	CANP	2P	32	Y	26
	IAC	2Q	41	GN	34
	FPRC	2K	31	BR	25
	BANK1	3E	58	Y	—
	BANK2	3C	59	Y/BK	—
1.8L MTX	CANP	2X	31	W/BL	26
	IAC	2W	41	BL/O	34
	HSIA	2S	53	BK/R	41
	FPRC	2T	11	GN/O	25
	BANK1	2U	58	Y	—
	BANK2	2V	59	Y/BK	—
1.8L 4EAT	CANP	2O	31	W/BL	26
	IAC	3Q	21B	BL/O	34
	HSIA	3I	42	BK/R	41
	FPRC	3M	21A	GN/O	25
	BANK1	3U	58	Y	—
	BANK2	3V	59	Y/BK	—
2.0L 4EAT	FPRC	3M	53A	GN	25
	CANP	3N	31A	W/BK	26
	EVR	3K	33	W/BL	28
	INJ1	3W	58	Y/BK	NA
	INJ2	3X	59	Y/W	NA
	INJ3	3Y	12	Y/R	NA
	INJ4	3Z	13	Y/GN	NA
	IAC	3O	21B	LG/BK	34
	VPWR[1]	1B, 1U	37, 57	R/BK	NA

(Continued)

EEC Pinpoint Tests	All Engines	SCG

CIRCUIT DATA SHEET (Cont'd)

Engine	SIG	PCM Pin	BOB Pin	Wire Color	Diagnostic Trouble Code
2.5L	FPRC	3M	21A	GN/BK	25
	CANP	2O	31	BL/BK	26
	EGRC	3P	52A	GN/W	28
	EGRV	3O	33A	W/BL	29
	INJ1	3U	58	R/LG	NA
	INJ2	3V	59	BL/W	NA
	INJ3	3W	12	BR	NA
	INJ4	3X	13	R/Y	NA
	INJ5	3Y	14	W	NA
	INJ6	3Z	15	W/BK	NA
	IAC	3Q	21B	LG/BK	34
	VRIS1	3I	42	W/GN	41
	VRIS2	3J	35	BL/R	46
	VPWR[1]	1B	37, 57	R/BK	NA

[1]VPWR is a "W/R" wire to the fuel injectors.

SOLENOID DATA SHEET

Solenoid	Activated by: (PCM ground solenoid under these conditions)	*Click Test Method
INJ (Fuel Injectors)	Cranking or running engine.	• Connect PCM. Key ON, crank engine. Listen to injector (clicking sound) with stethoscope.
CANP (Canister Purge)	Vehicle in gear, operating temperature above 60°C (140°F) during cruise and acceleration.	• Key ON, apply vacuum from intake manifold, vacuum should hold. • Ground Test Pin with jumper, vacuum should release.
EGRC (EGR Control)	Engine coolant temperature above 40°C (104°F). EGRC: normal driving (cruising)	• Key ON, apply vacuum from intake manifold. Vacuum should hold. • Ground Test Pin, vacuum should release.
EGRV (EGR Vent)	Engine coolant temperature above 40°C (104°F). EGRV: during idle, deceleration, or wide open throttle conditions	• Key ON, apply vacuum from EGR valve. Vacuum should not hold. • Ground Test Pin, vacuum should hold.
EVR (EGR Vacuum Regulator)	Engine coolant temperature below 70°C (158°F) or engine speed below 1500 rpm.	• Disconnect hoses at solenoid. Verify air flow between ports on the solenoid. Refer to diagram of ports shown in the electrical schematic. Ports — Air flow A-B — No A-C — No B-C — Yes • Key ON. Ground Test Pin. Verify air flow between ports on the solenoid. Ports — Air flow A-B — Yes A-C — No B-C — No

(Continued)

4EAT Pinpoint Tests

NOTE: Refer to Engine Supplement - Car, Section 3B, for Electrical Schematics and Connector Pin Usage Charts.

- The standard Ford color abbreviations are:

Abbreviation	Color
BK	Black
BL	Blue
BR	Brown
DB	Dark Blue
DG	Dark Green
GY	Gray
GN	Green
LB	Light Blue
LG	Light Green
N	Natural
O	Orange
PK	Pink
P	Purple
R	Red
T	Tan
W	White
V	Violet
Y	Yellow

Where two colors are shown for a wire, the first color is the basic color of the wire. The second color is the stripe marking.

For example:

BR/O is a brown wire with an orange stripe.

- Use the following breakout box and 4EAT tester, and adapters.

Engine	Number	Description	Adapter Cable
All 4EAT	007-0037B	4EAT Tester and All Adapters	—
All 4EAT	007-00037	4EAT Tester	—
1.6L 4EAT	007-0095A	4EAT Adapter	—
1.8L 4EAT, 2.0L 4EAT	007-00100B	4EAT Adapter	—
2.5L 4EAT	007-00100A	4EAT Adapter	—
All 4EAT	014-00322	Breakout Box	—
1.6L 4EAT	007-00038	Breakout Box Adapter	—
1.8L 4EAT, 2.5L 4EAT	T92C-6000-AH	Breakout Box Adapter	Number 2
2.0L 4EAT	T92C-6000-AH	Breakout Box Adapter	Number 1

4EAT Pinpoint Tests	All 4EAT	SCP

Data Sheet

NOTE: The Breakout Box Adapter T92C-6000-AH has an A / B position selector switch. Make sure that the switch is in the correct position for each test step, as specified in the Circuit Data Sheet. If no switch position is given then switch can be in either position.

CIRCUIT DATA SHEET

Engine	Circuit	PCM Pin	Breakout Box Pin	TCM Pin	Wire Color	Diagnostic Trouble Code
1.6L 4EAT	SS1	NA	NA	2E	BL/O	60
	SS2	NA	NA	2G	BL/Y	61
	SS3	NA	NA	2I	O	62
	TCCC	NA	NA	2K	BL	63
1.8L 4EAT	SS1	3W	12	NA	BL/O	60
	SS2	3X	13	NA	BL/Y	61
	SS3	3Y	14	NA	O	62
	TCCC	3Z	15	NA	BL	63
2.0L 4EAT	SS1	3P	6A	NA	BL	60
	SS2	3Q	53B	NA	BL/BK	61
	SS3	3R	31B	NA	GN/BK	62
	TCCC	3S	21B	NA	BL/W	63
	DSS	3T	6B	NA	R/W	64
2.5L 4EAT	SS1	NA	NA	2E	BL	60
	SS2	NA	NA	2G	BL/BK	61
	SS3	NA	NA	2I	GN/BK	62
	TCCC	NA	NA	2K	BL/W	63
	DSS	NA	NA	2M	R/W	64

Revised 9/92

Specifications/Special Service Tools

Special Service Tools/Equipment

SPECIAL SERVICE TOOLS

Tool Number/ Description	Illustration
T92C-6000-AH 1.8L 4EAT, 2.0L 4EAT and 2.5L Breakout Box Adapter	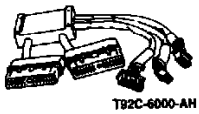 T92C-6000-AH

ROTUNDA EQUIPMENT

Model	Description
014-00322	Breakout Box
007-0037B	4EAT Tester and All Adapters
007-00037	4EAT Tester
007-0095A	4EAT Adapter
007-00100B	4EAT Adapter
007-00100A	4EAT Adapter
007-00038	Breakout Box Adapter
007-00057	Breakout Box Adapter
105-00051	Digital Volt-Ohmmeter
021-00014	Vacuum Tester
055-00100	Digital Thermometer
107-00300	Heat Gun

Revised 9/92

Technical Service Bulletin # **92243** Date: **921118**

MIL ON/No Codes Set Explanation

Article No.
92-24-3

11/18/92

^ EEC IV - EXPLANATION OF THREE DIGIT EEC IV SELF-TEST CODES AND MIL LAMP SERVICE TIPS

^ LAMP - "MALFUNCTION INDICATOR LIGHT" - EXPLANATION OF THREE DIGIT EEC IV SELF-TEST CODES AND MIL LAMP SERVICE TIPS

FORD:
1991-93 CROWN VICTORIA, ESCORT, MUSTANG, PROBE, TAURUS, TEMPO, THUNDERBIRD

LINCOLN-MERCURY:
1991-92 MARK VII
1991-93 CONTINENTAL, COUGAR, GRAND MARQUIS, SABLE, TOPAZ, TOWN CAR, TRACER
1993 MARK VIII

LIGHT TRUCK:
1991-93 AEROSTAR, BRONCO, ECONOLINE, EXPLORER, F SUPER DUTY, F-150-350 SERIES, RANGER

This TSB article is being republished in its entirety to include the Taurus and Sable models.

ISSUE:
Occasionally, there are reports of the Malfunction Indicator Lamp (MIL) "Check Engine" or "Service Engine Soon" lamp being lit with no Self-Test codes in Continuous Memory. An explanation of three digit EEC IV Self-Test Codes has been developed along with reasons for the MIL lamp being lit with no accompanying Continuous Memory Self-Test codes.

ACTION:
Refer to the following explanation of three digit EEC IV Self Test Codes to determine why the MIL lamp is sometimes lit with no accompanying

1993 Ford Probe L4-121 2.0L DOHC VIN A MFI

Continuous Memory Self-Test codes.

OVERVIEW OF THREE DIGIT EEC IV SELF-TEST CODES

Ford went from two digit to three digit EEC IV Self-Test codes in 1991 to service the increasing number of service codes required to support various government On-Board Diagnostic (OBD) regulations. The phase-in from two digit to three digit codes started in the 1991 model year and is largely complete except for some medium/heavy trucks that will retain two digit codes through the 1994 model year.

MIL LAMP ACTIVATION

Following is a list of reasons why a technician may see the MIL lamp lit with no accompanying Continuous Memory Self-Test codes.

1) Technician Not Familiar With Self-Test Code output

There are two types of EEC Self-Tests, Key On Engine Off (KOEO) and Key On Engine Running (KOER). While both of these will test for various "hard faults" that are present when the test is run, the processor continuously monitors various operating parameters whenever the engine is running. If the processor detects a problem, it will store a "Continuous Memory" code and light the MIL. These Continuous Memory codes are put out during KOEO Self-Test after any codes associated with hard faults are output.

Self-Test Codes are displayed by flashing the MIL. They are also output as voltage pulses on the Self-Test Output (STO) circuit in the Self-Test connector. In either Self-Test mode, all codes are output twice and in KOEO, the hard fault codes are separated from the Continuous Memory codes by a "separator" pulse.

A technician that is unfamiliar with the EEC Self-Test can mistakenly believe that continuous Memory codes are not present when they really are. He may run KOER Self-Test and get a pass code (III) and not realize that KOEO Self-Test must be run to receive any Continuous Memory codes. He may run KOEO Self-Test while counting MIL flashes and misinterpret the repeated hard fault pass code (III) to mean that Continuous Memory does not contain any codes.

2) Inadvertent Erasure Of Continuous Memory Self-Test Codes

Continuous Memory Self-Test codes are erased by ungrounding STI before KOEO Self-Test is complete and all KOEO and Continuous Memory codes have been displayed. It is possible to inadvertently erase Continuous Memory codes by ungrounding STI without realizing that KOEO Self-Test is not complete or the processor has not finished displaying all the codes.

The EEC Self-Test codes are not only used by service technicians, they are used as a final system test in the assembly plants. To make this test as efficient as possible, Self-Test codes are output as a very fast, short pulsewidth signal before the codes are displayed by the flashing MIL. These "FAST" codes can only be interpreted by end-of-line equipment or code-reading testers like Ford's Self-Test Automatic Readout (STAR) testers.

The EEC IV processor puts out both 2-digit and 3-digit Self-Test codes in both formats, "FAST" pulsewidth mode and "SLOW" pulsewidth mode. While all "STAR" type testers display 2-digit codes, the original STAR tester cannot display 3-digit service codes. If the STAR tester is used on 3-digit service code applications, the display will be blank but the tester will beep. The beeps can be counted to determine service codes. The SUPER STAR II tester will only display 3-digit service codes in "FAST" code mode. If slow code mode is used on 3-digit service code applications, the display will be blank but the tester will beep. The beeps can be counted to determine service codes. For more information on running Self-Test, refer to the "EEC IV Quick Test Procedures and Appendix" section of the Powertrain Control/Emissions Diagnosis Service Manual.

Since certain STAR testers are capable of reading and displaying fast codes before the slow codes are finished being output on the MIL, a technician can assume that since he sees codes displayed, he can unground STI and move on. If he ungrounds STI before all slow codes are output, Continuous Memory will be erased and could put out a pass code (II/III) the next time KOEO Self-Test is run. The technician may also realize that his tester is in "SLOW" mode after he has initiated the KOEO test and stop the test to change tester settings. Another possibility is that another person, a vehicle owner or another technician, could have erased the codes before the technician reporting the situation has run Self-Test. In any of these situations, the vehicle must be driven until the Continuous Memory codes are reset.

3) The Concern That Set The Continuous Memory Code Is No Longer Present

The EEC processor will erase a Continuous Memory code if the concern that caused it has not been present for 40 or 80 warm-up cycles, depending on the vehicle. A warm-up cycle occurs when the vehicle is started with the coolant temperature below 120~F (49~ C) and then shutdown with the coolant temperature above 150~F (66~ C). If a vehicle is brought in for service with a MIL complaint and the vehicle is driven or otherwise allowed to warm-up before Self-Test is run, the code may be cleared before the technician tests it.

4) Grounded STO/MIL Circuit

The processor controls the MIL by grounding the STO/MIL circuit (Pin 17). If this circuit shorts to ground, whether the processor is controlling it or not, the MIL will be lit. Starting in 1991, if the processor has lit the MIL, it will hold it on for a minimum of 10 seconds. If the MIL flashes quickly, the concern is probably the STO/MIL circuit shorting intermittently to ground.

5) Engine Running In HLOS

The EEC processor will enter Hardware Limited Operation Strategy (HLOS) if it detects a problem that could cause further damage to the system. Under HLOS, the processor modifies its operating strategy so that certain functions are disabled but the vehicle can be safely driven in for service.

If the vehicle is in HLOS, Continuous Memory codes will not be set and Self-Test cannot be initiated. However, Continuous codes that were set before the processor entered HLOS will be retained.

6) Misinterpretation Of MIL Bulb Check

The MIL will light as a bulb check if the key is on and the engine is not running. If the engine is running and stalls or stops for any reason with the key on, the MIL will be lit and no Continuous Memory codes will be set. When the key is first turned on, the MIL will stay lit briefly after the engine is started as part of the bulb check feature.

7) MIL Flashes During Self-Test

The circuit that controls the MIL is also the Self-Test Output (STO) circuit that goes to the Self-Test connector. The MIL will flash during Self-Test as the STO circuit is cycled on and off. This is normal and no Continuous codes are set.

8) Processor KAM Is Erased Or Fails

The Keep Alive Memory (KAM) within the processor must always have voltage supplied to it. This voltage is supplied by the Keep Alive Power (KAPWR) circuit (Pin 1) that connects directly to the battery. KAM contains adaptive parameter tables that allow the processor to adapt to different operating requirements. It also contains the Continuous Memory codes. Continuous Memory codes will be erased any time KAPWR is disconnected (i.e. battery disconnected, processor disconnected, breakout box installed, open in the wire, etc.). If KAM fails within the processor, all Continuous codes will also be erased.

9) Damaged STAR Tester

A damaged STAR tester can produce erroneous code output or accidentally erase Continuous Memory.

10) KOEO Processor RAM Test Failed

The processor's Random Access Memory (RAM) is tested during KOEO Self-Test. If the processor's RAM has failed, the MIL will light and no codes are output.

11) Intermittent VSS Fault Detected In Wiggle Mode

If in wiggle mode (STI grounded) and an intermittent Vehicle Speed Sensor (VSS) fault is detected, the MIL can be lit momentarily. If the VSS signal returns to normal, the associated code is erased. In normal operation, the VSS will not light the MIL.

12) IDM Pulsewidth Not Recognized By Processor (EDIS Vehicles)

EDIS vehicles can have the MIL on with no Continuous codes if the processor does not recognize the Ignition Diagnostic Monitor (IDM) pulsewidth. In this case, coil pack failure codes may not be set since the fault filters can be erased before they reach the threshold that sets the code.

13) Intermittent Ignition System Fault

Vehicles with a Cylinder Identification (CID) sensor can light the MIL with no Continuous codes present if an intermittent ignition system fault is present long enough to activate the MIL and then goes away. The CID sensor can indicate that the fault was momentary and clear the coil pack faults but the CID fault may not register if the fault goes away fast enough.

14) Intermittent Open STI Circuit

If the Self-Test Input (STI) circuit opened during KOEO Self-Test or code output, Continuous Memory would be cleared.

15) Power Lost To EEC Processor

On some applications, the processor can lose power while the MIL stays powered. The MIL can light if a ground path is present through the processor.

16) Other Warning Lamps Mistaken For MIL

The MIL can sometimes be confused with other warning lamps like the amber Air Bag lamp if they are located near each other in the dash panel.

17) Development Testing Or Wrong Processor Released To Production

The MIL can be lit without Continuous codes during testing or if the wrong processor is installed.

SUPERSEDES:
92-4-4

WARRANTY STATUS:
INFORMATION ONLY

OASIS CODES:
206000, 690000

Technical Service Bulletin # **9244** Date: **920212**

EEC IV - Self Test Codes and MIL Service Tips

Article No.
92-4-4

02/12/92

^ EEC-IV - OVERVIEW OF THREE DIGIT EEC-IV SELF-TEST CODES AND MIL LAMP SERVICE TIPS

^ LAMP - "MALFUNCTION INDICATOR LIGHT" - OVERVIEW OF THREE DIGIT EEC-IV SELF-TEST CODES AND MIL LAMP SERVICE TIPS

FORD:
1991 and after CROWN VICTORIA, ESCORT, MUSTANG, PROBE, TEMPO, THUNDERBIRD

LINCOLN-MERCURY:
1991 and after CONTINENTAL, COUGAR, GRAND MARQUIS, MARK VII, TOPAZ, TOWN CAR, TRACER

LIGHT TRUCK:
1991 and after AEROSTAR, BRONCO, ECONOLINE, EXPLORER, F SUPER DUTY, F-150-350 SERIES, RANGER

ISSUE:
Occasionally, there are reports of the Malfunction Indicator Lamp (MIL) "Check Engine" or "Service Engine Soon" lamp being lit with no Self-Test codes in Continuous Memory. An overview of three digit EEC-IV Self-Test Codes has been developed along with reasons for the MIL lamp being lit with no accompanying Continuous Memory Self-Test codes.

ACTION:
Refer to the following overview of three digit EEC-IV Self Test Codes to determine why the MIL lamp is sometimes lit with no accompanying Continuous Memory Self-Test codes.

OTHER APPLICABLE ARTICLES: NONE

WARRANTY STATUS: INFORMATION ONLY

OASIS CODES: 206000

Overview of Three Digit EEC-IV Self-Test Codes

Ford introduced three digit EEC-IV Self-Test codes in 1991 to accommodate the increasing number of service codes required to support various government On-Board Diagnostic (OBD) regulations. The phase in from two digit to three digit codes started in the 1991 model year and is largely complete except for some medium/heavy trucks that will retain two digit codes through the 1994 model year.

MIL LAMP ACTIVATION

Following is a list of reasons why a technician may see the MIL lamp lit with no accompanying Continuous Memory Self-Test codes.

1) Technician Not Familiar With Self-Test Code Output

There are two types of EEC Self-Tests, Key On Engine Off (KOEO) and Key On Engine Running (KOER). While both of these will test for various "hard faults" that are present when the test is run, the processor continuously monitors various operating parameters whenever the engine is running. If the processor detects a problem, it will store a "Continuous Memory" code and light the MIL. These Continuous Memory codes are put out during KOE0 Self-Test after any codes associated with hard faults are output.

Self-Test Codes are displayed by flashing the MIL. They are also output as voltage pulses on the Self-Test Output (STO) circuit in the Self-Test connector. In either Self-Test mode, all codes are output twice and in KOEO, the hard fault codes are separated from the Continuous Memory codes by a "separator" pulse.

A technician that is unfamiliar with the EEC Self-Test can mistakenly believe that continuous Memory codes are not present when they really are. He may run KOER Self-Test and get a pass code (III) and not realize that KOEO Self-Test must be run to receive any Continuous Memory codes. He may run KOEO Self-Test while counting MIL flashes and misinterpret the repeated hard fault pass code (III) to mean that Continuous Memory does not contain any codes.

2) Inadvertent Erasure of Continuous Memory Self-Test Codes

Continuous Memory Self-Test codes are erased by ungrounding STI before KOEO Self-Test is complete and all KOEO and Continuous Memory codes have been displayed. It is possible to inadvertently erase Continuous Memory codes by ungrounding STI without realizing that KOEO Self-Test is not complete or the processor has not finished displaying all the codes.

The EEC Self-Test codes are not only used by service technicians, they are used as a final system test in the assembly plants. To make this test as efficient as possible, Self-Teat codes are output as a very fast, short pulsewidth signal before the codes are displayed by the flashing MIL. These "FAST" codes can only be interpreted by end-of-line equipment or code-reading testers like Ford's Self-Test Automatic Readout (STAR) testers.

The EEC-IV processor puts out both 2-digit and 3-digit Self-Test codes in both formats, "FAST" pulsewidth mode and "SLOW" pulsewidth mode. While all "STAR" type testers display 2-digit codes, the original STAR tester cannot display 3-digit service codes. If the STAR tester is used on 3-digit service code applications, the display will be blank but the tester will beep. The beeps can be counted to determine service codes. The SUPER STAR tester will only display 3-digit service codes in "FAST" code mode. If slow code mode is used on 3-digit service code applications, the display will be blank but the tester will beep. The beeps can be counted to determine service codes. For more information on running Self-Test, refer to the "EEC-IV Quick Test Procedures and Appendix" section of the Powertrain Control/Emissions Diagnosis service manual.

Since certain STAR testers are capable of reading and displaying fast codes before the slow codes are finished being output on the MIL, a technician can assume that since he sees codes displayed, he can unground ST and move on. If he ungrounds STI before all slow codes are output, Continuous Memory will be erased and could put out a pass code (II/III) the next time KOEO Self-Test is run. The technician may also realize that his tester is in "SLOW" mode after he has initiated the KOEO test and stop the test to change tester settings. Another possibility is that another person, a vehicle owner or another technician, could have erased the codes before the technician reporting the situation has run Self-Test. In any of these situations, the vehicle must be driven until the Continuous Memory codes are reset.

3) Concern Setting Continious Memory Code Isn't Present

The EEC processor will erase a Continuous Memory code if the concern that caused it has not been present for 40 or 80 warm-up cycles, depending on the vehicle. A warm-up cycle occurs when the vehicle is started with the coolant temperature below 120° Fahrenheit and then shutdown with the coolant temperature above 150°. If a vehicle is brought in for service with a MIL complaint and the vehicle is driven or otherwise allowed to warm-up before Self-Test is run, the code may be cleared before the technician tests it.

4) Grounded STO/MIL Circuit

The processor controls the MIL by grounding the STO/MIL circuit (Pin 17). If this circuit shorts to ground, whether the processor is controlling it or not, the MIL will be lit. Starting in 1991, if the processor has lit the MIL, it will hold it on for a minimum of 10 seconds. If the MIL flashes quickly, the concern is probably the STO/MIL circuit shorting intermittently to ground.

5) Engine Running In Hlos

The EEC processor will enter Hardware Limited Operation Strategy (HLOS) if it detects a problem that could cause further damage to the system. Under HLOS, the processor modifies its operating strategy so that certain functions are disabled but the vehicle can be safely driven in for service. If the vehicle is in HLOS, Continuous Memory codes will not be set and Self-Test cannot be initiated. However, Continuous codes that were set before the processor entered HLOS will be retained.

6) Misinterpretation of MIL Bulb Check

The MIL will light as a bulb check if the key is on and the engine is not running. If the engine is running and stalls or stops for any reason with the key on, the MIL will be lit and no Continuous Memory codes will be set. When the key is first turned on, the MIL will stay lit briefly after the engine is started as part of the bulb check feature.

7) MIL Flashes During Self-Test

The circuit that controls the MIL is also the Self-Test Output (STO) circuit that goes to the Self-Test connector. The MIL will flash during Self-Test as the STO circuit is cycled on and off. This is normal and no Continuous codes are set.

8) Processor KAM Is Erased or Fails

The Keep Alive Memory (KAM) within the processor must always have voltage supplied to it. This voltage is supplied by the Keep Alive Power (KAPWR) circuit (Pin 1) that connects directly to the battery. KAM contains adaptive parameter tables that allow the processor to adapt to different operating requirements. It also contains the Continuous Memory codes. Continuous Memory codes will be erased any time KAPWR is disconnected (i.e. battery disconnected, processor disconnected, breakout box installed, open in the wire, etc.). If KAM fails within the processor, all Continuous codes will also be erased.

9) Damaged Star Tester

A damaged STAR tester can produce erroneous code output or accidentally erase Continuous Memory.

10) KOEO Processor Ram Test Failed

The processor's Random Access Memory (RAM) is tested during KOEO Self-Test. If the processor's RAM has failed, the MIL will light and no codes are output.

11) Intermittent VSS Fault Detected In Wiggle Mode

If in wiggle mode (STI grounded) and an intermittent Vehicle Speed Sensor (VSS) fault is detected, the MIL can be lit momentarily. If the VSS signal returns to normal, the associated code is erased. In normal operation, the VSS will not light the MIL.

12) IDM Pulswidth Not Recognized By Processor (EDIS Vehicles)

EDIS vehicles can have the MIL on with no Continuous codes if the processor does not recognize the Ignition Diagnostic Monitor (1DM) pulsewidth. In this case, coil pack failure codes may not be set since the fault filters can be erased before they reach the threshold that sets the code.

13) Intermittent Ignition System Fault

Vehicles with a Cylinder Identification (CID) sensor can light the MIL with no Continuous codes present if an intermittent ignition system fault is present long enough to activate the MIL and then goes away. The CID sensor can indicate that the fault was momentary and clear the coil pack faults but the CID fault may not register if the fault goes away fast enough.

14) Intermittent Open STI Circuit

If the Self-Test Input (STI) circuit opened during KOEO Self-Test or code output, Continuous Memory would be cleared.

15) Power Lost to EEC Processor

On some applications, the processor can lose power while the MIL stays powered. The MIL can light if a ground path is present through the processor.

16) Other Warning Lamps Mistaken For MIL

The MIL can sometimes be confused with other warning lamps like the amber Air Bag lamp if they are located near each other in the dash panel.

17) Development Testing /Wrong Processor Released to Production

The MIL can be lit without Continuous codes during development testing or if the wrong processor is released to production.

Technical Service Bulletin # **9355** Date: **930303**

Electronics - Diagnostic Tools & Adapter Application

Article No.
93-5-5

March 3, 1993

^ DIAGNOSTIC TOOLS AND ADAPTERS (ELECTRONIC) - DESCRIPTIVE LIST

^ ELECTRONIC DIAGNOSTIC TOOLS AND ADAPTERS - DESCRIPTIVE LIST

FORD:
1989-93 ESCORT, FESTIVA, PROBE

LINCOLN-MERCURY:
1989-93 TRACER
1991-93 CAPRI

LIGHT TRUCK:
1993 VILLAGER

ISSUE:
The diagnostic tools and breakout box adapter applications for the vehicles listed above are not easily found in the Service or Powertrain Control/Emissions Diagnosis Manuals.

ACTION:
Refer to Figures 1-5 for a list of the diagnostic tool applications listing the model, year and engine transaxle combinations. Refer to Figures 6-11 for descriptions and instructions for connecting various breakout box adapters.

1989-1993 ESCORT/TRACER DIAGNOSTIC TOOLS							
YEAR	ENGINE	MECS/EEC IV NGS/SUPERSTAR II	MONITOR		4EAT		EEC IV BREAKOUT BOX
			ADAPTER	OVERLAY	ADAPTER	OVERLAY	
1989	1.6L ATX TRACER	ADAPTER #007-00052 OR 00036	007-00038	#27	N/A	N/A	ADAPTER # 007-00038
	1.6L MTX TRACER	ADAPTER #007-00052 OR 00036	007-00038	#27	N/A	N/A	ADAPTER # 007-00038
1989	1.9L CFI ESCORT	NO ADAPTER NEEDED	EEC IV	#1	N/A	N/A	EEC IV
	1.9L EFI ESCORT	NO ADAPTER NEEDED	EEC IV	#5	N/A	N/A	EEC IV
1990	1.9L CFI	NO ADAPTER NEEDED	EEC IV	#1	N/A	N/A	NO ADAPTER NEEDED
	1.9L EFI	NO ADAPTER NEEDED	EEC IV	#5	N/A	N/A	NO ADAPTER NEEDED
1991	1.8L ATX	ADAPTER #007-00052 OR 00049	007-00057	#36	007-00095A	3122-691	ADAPTER # 007-00057
	1.8L MTX	ADAPTER #007-00052 OR 00049	007-00057	#36	N/A	N/A	ADAPTER # 007-00057
	1.9L ATX	NO ADAPTER NEEDED	EEC IV	#41	007-00095A	3122-691	NO ADAPTER NEEDED
	1.9L MTX	NO ADAPTER NEEDED	EEC IV	#41	N/A	N/A	NO ADAPTER NEEDED
1992	1.8L ATX	ADAPTER #007-00052 OR 00049	007-00057	#36	007-00095A	3122-691	ADAPTER # 007-00057
	1.8L MTX	ADAPTER #007-00052 OR 00049	007-00057	#36	N/A	N/A	ADAPTER # 007-00057
	1.9L ATX	NO ADAPTER NEEDED	EEC IV	#41	007-00095A	3122-691	NO ADAPTER NEEDED
	1.9L MTX	NO ADAPTER NEEDED	EEC IV	#41	N/A	N/A	NO ADAPTER NEEDED
1993	1.8L ATX	ADAPTER #007-00052 OR 00049	T92C-6000-AH	#60	007-00100B	3122-731	ADAPTER # T92C-6000-AH
	1.8L MTX	ADAPTER #007-00052 OR 00049	007-00057	#63	N/A	N/A	ADAPTER # 007-00057
	1.9L ATX	NO ADAPTER NEEDED	EEC IV	#41 REV. A	007-00100C	3122-732	NO ADAPTER NEEDED
	1.9L MTX	NO ADAPTER NEEDED	EEC IV	#41 REV. A	N/A	N/A	NO ADAPTER NEEDED

1989-1991 PROBE DIAGNOSTIC TOOLS							
YEAR	ENGINE	MECS/EEC IV NGS/SUPERSTAR II	MONITOR		4EAT		EEC IV BREAKOUT BOX
			ADAPTER	OVERLAY	ADAPTER	OVERLAY	
1989	2.2L ATX	ADAPTER #007-00052 OR 00036	007-00038	#27	NO ADAPTER NEEDED	3122-693	ADAPTER # 007-00038
	2.2L MTX	ADAPTER #007-00052 OR 00036	007-00038	#27	NO ADAPTER NEEDED	N/A	ADAPTER # 007-00038
	2.2L TURBO	ADAPTER #007-00052 OR 00036	007-00038	#28	NO ADAPTER NEEDED	3122-693	ADAPTER # 007-00038
1990	2.2L ATX	ADAPTER #007-00052 OR 00036	007-00058	#39	007-0095B	3122-692	ADAPTER # 007-00058
	2.2L MTX	ADAPTER #007-00052 OR 00036	007-00057	#38	N/A	N/A	ADAPTER # 007-00057
	2.2L ATX TURBO	ADAPTER #007-00052 OR 00036	007-00058	#40	007-0095A	3122-690	ADAPTER # 007-00058
	2.2L MTX TURBO	ADAPTER #007-00052 OR 00036	007-00058	#40	N/A	N/A	ADAPTER # 007-00058
	3.0L ATX	ADAPTER #007-00052 OR 00036	EEC IV	#43	007-0095A	3122-690	NO ADAPTER NEEDED
	3.0L MTX	ADAPTER #007-00052 OR 00036	EEC IV	#43	N/A	N/A	NO ADAPTER NEEDED
1991	2.2L ATX	ADAPTER #007-00052 OR 00036	007-00058	#39	007-0095B	3122-692	ADAPTER # 007-00058
	2.2L MTX	ADAPTER #007-00052 OR 00036	007-00057	#38	N/A	N/A	ADAPTER # 007-00057
	2.2L ATX TURBO	ADAPTER #007-00052 OR 00036	007-00058	#40	007-0095A	3122-690	ADAPTER # 007-00058
	2.2L MTX TURBO	ADAPTER #007-00052 OR 00036	007-00058	#40	N/A	N/A	ADAPTER # 007-00058
	3.0L ATX	ADAPTER #007-00052 OR 00036	EEC IV	#43	007-0095A	3122-690	NO ADAPTER NEEDED
	3.0L MTX	ADAPTER #007-00052 OR 00036	EEC IV	#43	N/A	N/A	NO ADAPTER NEEDED

1992-1993 PROBE DIAGNOSTIC TOOLS							
YEAR	ENGINE	MECS/EEC IV NGS/SUPERSTAR II	MONITOR		4EAT		EEC IV BREAKOUT BOX
			ADAPTER	OVERLAY	ADAPTER	OVERLAY	
1992	2.2L ATX	ADAPTER #007-00052 OR 00036	007-00058	#39	007-0095B	3122-692	ADAPTER # 007-00058
	2.2L MTX	ADAPTER #007-00052 OR 00036	007-00057	#38	N/A	N/A	ADAPTER # 007-00057
	2.2L ATX TURBO	ADAPTER #007-00052 OR 00036	007-00058	#40	007-0095A	3122-690	ADAPTER # 007-00058
	2.2L MTX TURBO	ADAPTER #007-00052 OR 00036	007-00058	#40	N/A	N/A	ADAPTER # 007-00058
	3.0L ATX	ADAPTER #007-00052 OR 00036	EEC IV	#43	007-0095A	3122-690	NO ADAPTER NEEDED
	3.0L MTX	ADAPTER #007-00052 OR 00036	EEC IV	#43	N/A	N/A	NO ADAPTER NEEDED
1993	2.0L ATX	ADAPTER # 007-00052	T92C-6000-AH	#61	007-00100B	3122-697	T92C-6000-AH
	2.0L MTX	NO ADAPTER NEEDED	EEC IV	#57	N/A	N/A	NO ADAPTER NEEDED
	2.5L ATX	ADAPTER # 007-00052	T92C-6000-AH	#62	007-00100A	3122-696	T92C-6000-AH
	2.5L MTX	ADAPTER # 007-00052	T92C-6000-AH	#62	N/A	N/A	T92C-6000-AH

1989 -1993 FESTIVA DIAGNOSTIC TOOLS							
YEAR	ENGINE	MECS/EEC IV NGS/SUPERSTAR II	MONITOR		4EAT		EEC IV BREAKOUT BOX
			ADAPTER	OVERLAY	ADAPTER	OVERLAY	
1989	1.3L FBC	ADAPTER #007-00052 OR 00036	007-00027	#22	N/A	N/A	ADAPTER # 007-00027
	1.3L EFI	ADAPTER #007-00052 OR 00036	007-00045	#30	N/A	N/A	ADAPTER # 007-00045
1990	1.3L ATX	ADAPTER #007-00052 OR 00036	007-00057	#37	N/A	N/A	ADAPTER # 007-00057
	1.3L MTX	ADAPTER #007-00052 OR 00036	007-00057	#37	N/A	N/A	ADAPTER# 007-00057
1991	1.3L ATX	ADAPTER #007-00052 OR 00036	007-00057	#37	N/A	N/A	ADAPTER # 007-00057
	1.3L MTX	ADAPTER #007-00052 OR 00036	007-00057	#37	N/A	N/A	ADAPTER# 007-00057
1992	1.3L ATX	ADAPTER #007-00052 OR 00036	007-00057	#37	N/A	N/A	ADAPTER # 007-00057
	1.3L MTX	ADAPTER #007-00052 OR 00036	007-00057	#37	N/A	N/A	ADAPTER# 007-00057
1993	1.3L ATX	ADAPTER #007-00052 OR 00036	007-00057	#37	N/A	N/A	ADAPTER # 007-00057
	1.3L MTX	ADAPTER #007-00052 OR 00036	007-00057	#37	N/A	N/A	ADAPTER# 007-00057

TB-2987-A

Figure 4

89-93 FESTIVA

1993 VILLAGER DIAGNOSTIC TOOLS			
NGS	PCM ADAPTER	TCM ADAPTER	ABS ADAPTER
NO ADAPTER NEEDED	#007-00053	#007-00054	#007-00055

1991-1993 CAPRI DIAGNOSTIC TOOLS							
YEAR	ENGINE	MECS/EEC IV NGS/SUPERSTAR II	MONITOR		4EAT		EEC IV BREAKOUT BOX
			ADAPTER	OVERLAY	ADAPTER	OVERLAY	
1991 THRU 1993	1.6L ATX	ADAPTER #007-00052 OR 00036	007-00038	#46	007-0095A	3122-694	ADAPTER # 007-00038
	1.6L MTX	ADAPTER #007-00052 OR 00036	007-00038	#46	N/A	N/A	ADAPTER # 007-00038
	1.6L TURBO	ADAPTER #007-00052 OR 00036	007-00038	#47	N/A	N/A	ADAPTER # 007-00038

TB-2988-A

Figure 5

93 VILLAGER AND 91-93 CAPRI

BREAKOUT BOX ADAPTER
T92C-6000-AH

APPLICATION: 1993 PROBE 2.0L AND 2.5L ENGINES

NOTE: Application instructions for this adapter are found in the diagnostics manual for each particular system.

1. Disconnect the vehicle harness from the vehicle microprocessor.
2. Connect the vehicle harness to the **Breakout Box Adapter (T92C-6000-AH).**
3. Attach the adapter harness to the vehicle microprocessor.
4. Determine which of the adapter's two 60-pin connectors is correct for your application. Fasten the 60-pin connector to the EEC IV Breakout Box or the EEC IV Monitor. Use a 10mm open end wrench to tighten the connection.
5. Refer to the diagnostic manual for the system being tested to determine the correct position of the A/B switch. (An A/B switch is required to enable testing of all 64 lines of the 1993 Probe microprocessor using the EEC IV Breakout Box or EEC IV Monitor.) Place the A/B switch in the correct position.

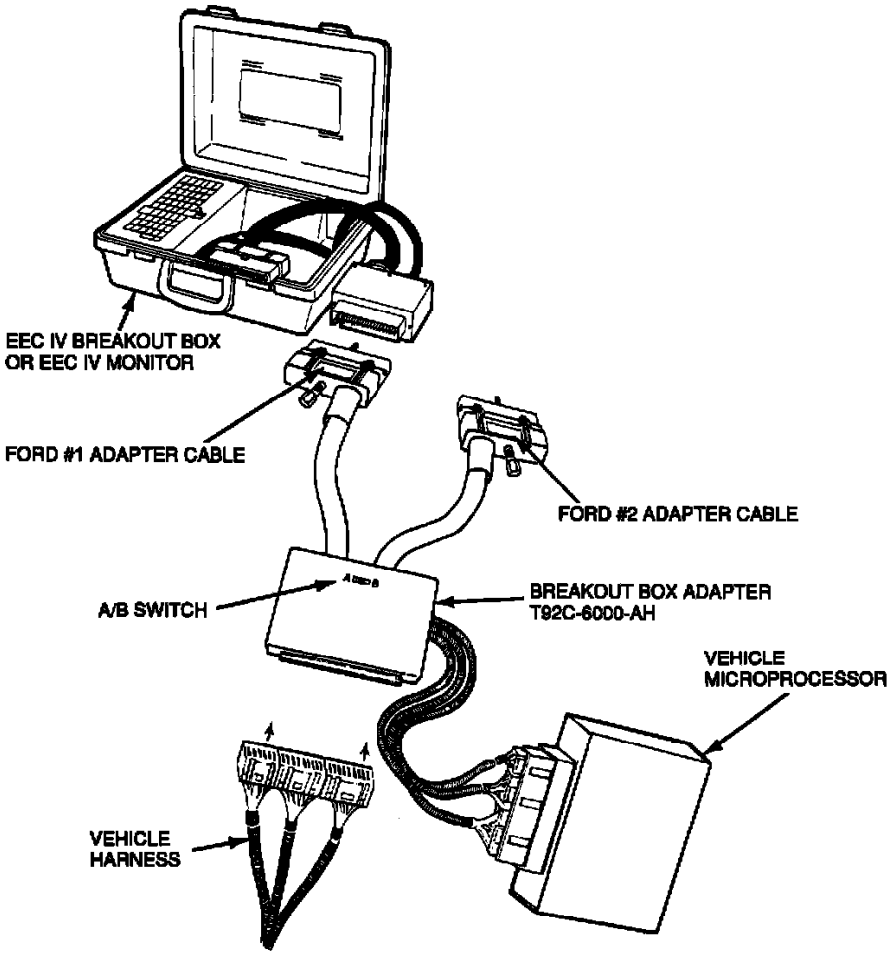

TB-2989-A

Figure 6

BREAKOUT BOX ADAPTER T92C-6000AH
APPLICATION: 93 PROBE 2.0L AND 2.5 L ENGINES

TFI IV CABLE PIP ADAPTER
007-00083

APPLICATION: 1993 PROBE 2.0L MTX

1. Disconnect the vehicle harness from the distributor.
2. Connect one end of the **TFI IV Cable PIP Adapter (007-00083)** to the vehicle harness and distributor connectors.
3. Connect the other end of the **Adapter** to the TFI IV cable 8-pin sensor connectors.
4. Install the overlay card on the previously released Breakout Box (T83L-50-EEC-IV) for correct pinouts.

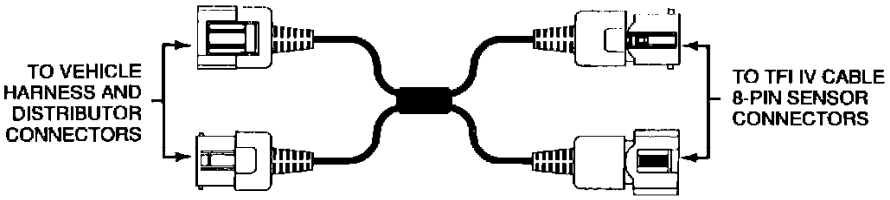

PIP ADAPTER AND OVERLAY CARD FOR TFI IV CABLE (007-00097)

TB-2990-A

Figure 7

TFI IV CABLE PIN ADAPTER OO7-00083
APPLICATION: 93 PROBE 2.0 L MTX

SUPER MECS ADAPTER
007-00052

APPLICATION: 1989-93 PROBE, 1988-92 FESTIVA, 1988-93 TRACER, 1991-93 ESCORT, 1991-92 CAPRI

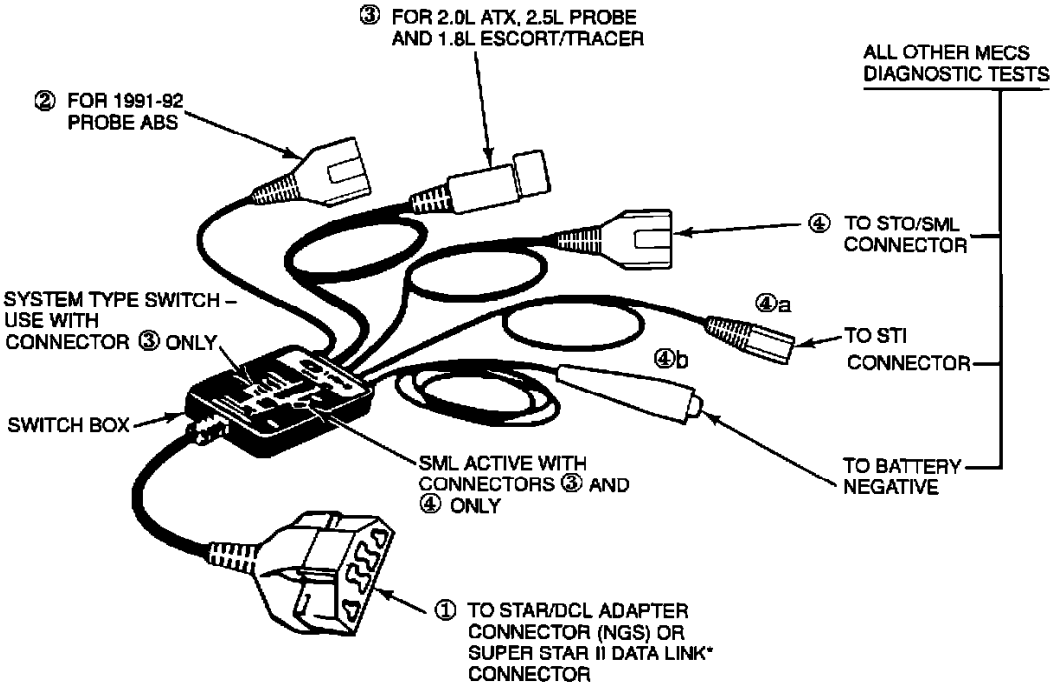

The Super MECS Adapter allows you to connect the Super STAR II or NGS to MECS type Data Link* connectors. The Super MECS Adapter can be used for all MECS Diagnostic Tests**.

- Connect Super MECS Adapter to Super STAR II or to NGS's STAR/DCL Adapter (see ①).
- Select Super MECS Connector (either ②, ③, or ④) based on the desired Diagnostic Test**.
  - When using connector ③, you must select a System Type on the Switch Box.
  - When using connector ④, you must also connect ④a and ④b.
- Connect selected Super MECS connector to vehicle's Data Link* connector (refer to Service Manual for location).
- Refer to Service Manual for Diagnostic Test Instructions.

* SELF-TEST CONNECTOR
** SELF-TEST

TB-2991-A

Figure 8

SUPER MECS ADAPTER 007-00052
APPLICATION 89-93 PROBE, 88-92 FESTIVA, 88-93 TRACER, 91-93 ESCORT, 91-92 CAPRI

BREAKOUT BOX ADAPTER
007-00053

APPLICATION: 1993 MERCURY VILLAGER ENGINES

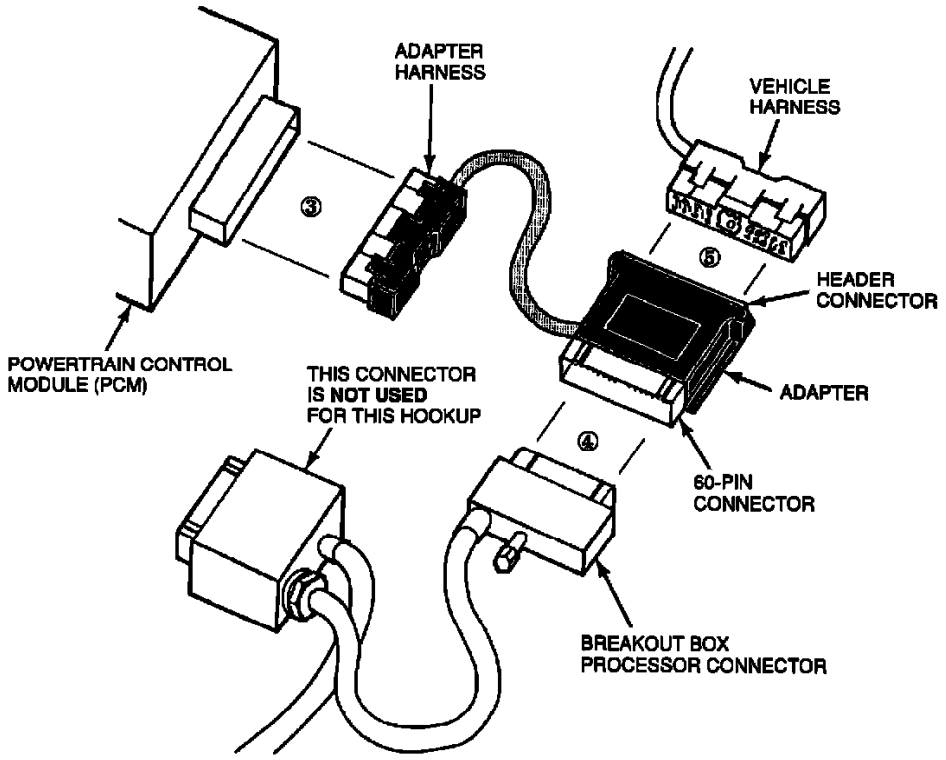

① Key off.

② Disconnect VEHICLE HARNESS from PCM.

③ Connect ADAPTER HARNESS to PCM.

④ Connect Breakout Box's PROCESSOR CONNECTOR to adapter's 60-PIN CONNECTOR.

⑤ Connect VEHICLE HARNESS to adapter's HEADER CONNECTOR.

⑥ Refer to Service Manual for Diagnostic Test Instructions.

TB-2992-A

Figure 9

BREAKOUT BOX ADAPTER 007-00053
APPLICATION: 93 MERCURY VILLAGER ENGINES

BREAKOUT BOX ADAPTER
007-00054

APPLICATION: 1993 MERCURY VILLAGER 4F20E TRANSMISSION CONTROL MODULE

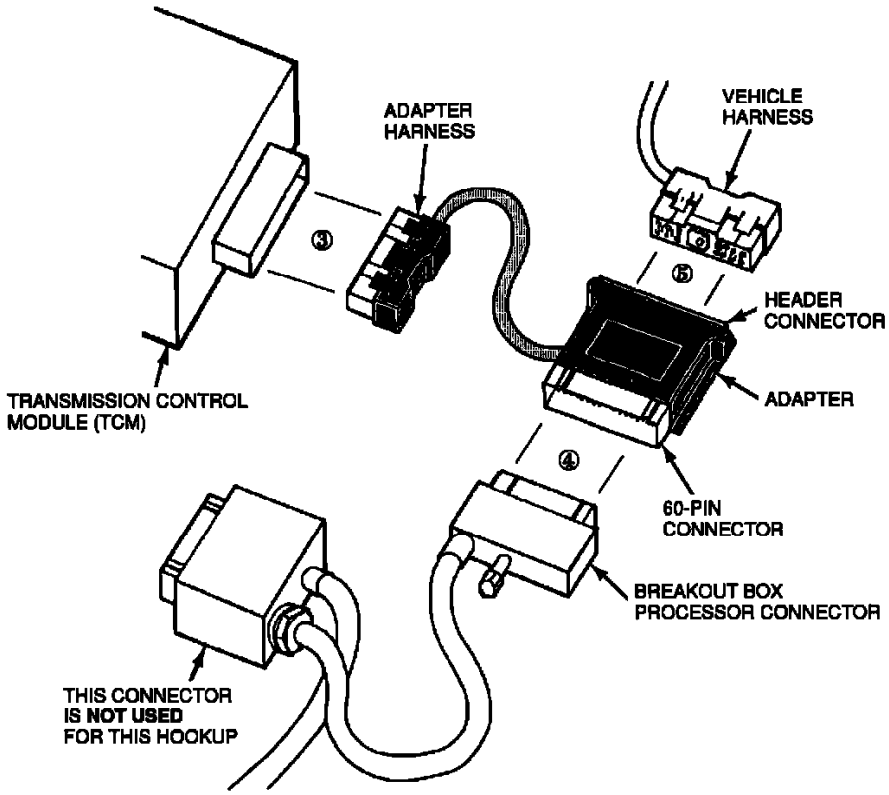

① Key off.

② Disconnect VEHICLE HARNESS from TCM.

③ Connect ADAPTER HARNESS to TCM.

④ Connect Breakout Box's PROCESSOR CONNECTOR to adapter's 60-PIN CONNECTOR.

⑤ Connect VEHICLE HARNESS to adapter's HEADER CONNECTOR.

⑥ Refer to Service Manual for Diagnostic Test Instructions.

TB-2993-A

Figure 10

BREAKOUT BOX ADAPTER 007-00054
APPLICATION: 93 MERCURY VILLAGER 4F20E TRANSMISSION CONTROL MODULE

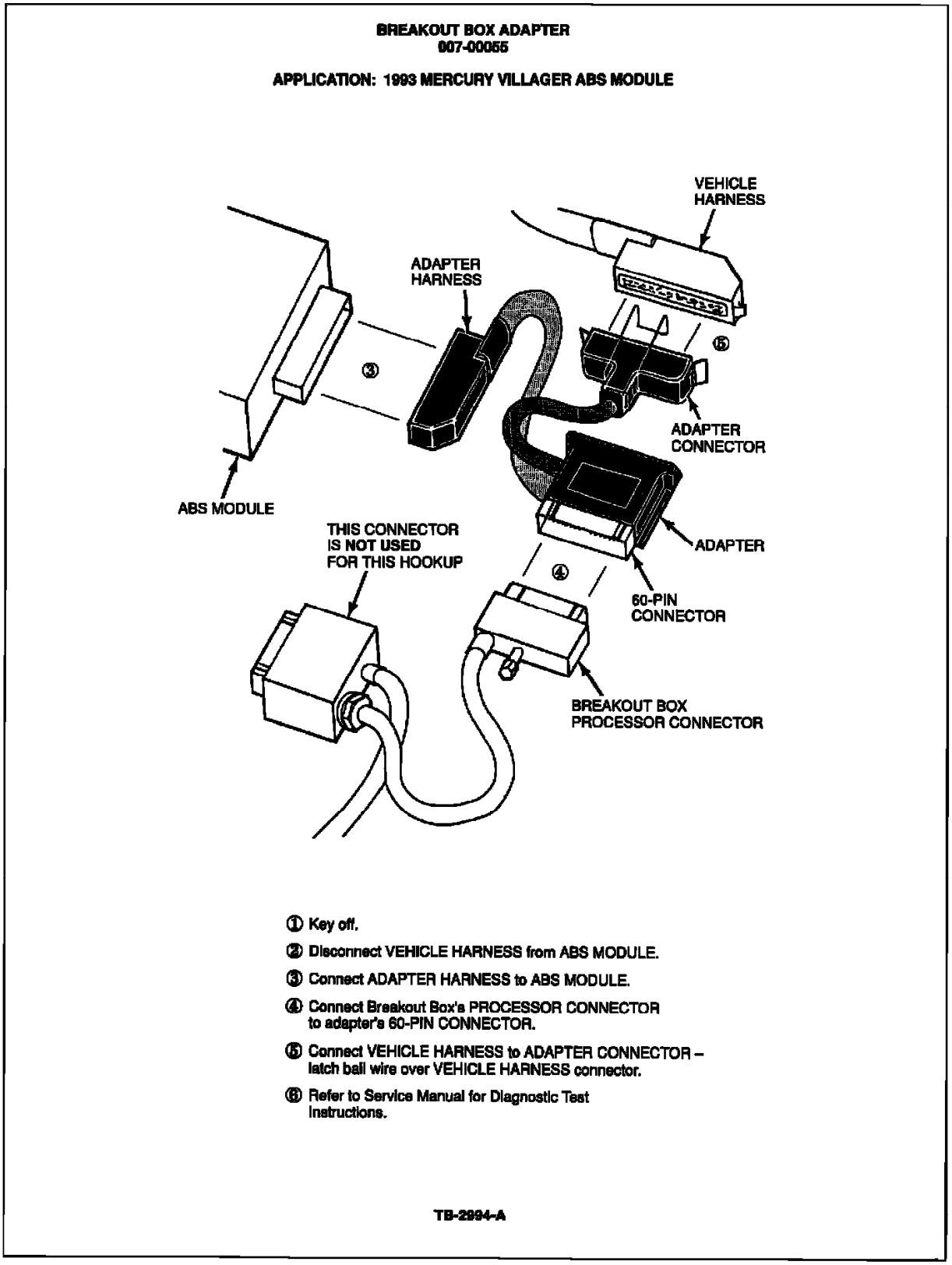

Figure 11

BREAKOUT ADAPTER OO7-00055
APPLICATION: 93 MERCURY VILLAGER ABS MODULE

OTHER APPLICABLE ARTICLES: NONE

WARRANTY STATUS: INFORMATION ONLY

OASIS CODES:
190000, 290000, 390000, 590000, 690000

Technical Service Bulletin # **9558** Date: **950313**

Engine - Hard/No Start/Fuel Shutoff Lamp Illuminated

Article No.

1993 Ford Probe L4-121 2.0L DOHC VIN A MFI

95-5-8

03/13/95

^ HARD START/NO START - WIRING - CORROSION/OPEN CIRCUIT AT SPLICE 102/CIRCUIT 9 - FUEL SHUTOFF LAMP ON - VEHICLES BUILT FROM 4/16/92 THROUGH 8/25/94 - WITH SPEED CONTROL AND WITHOUT ANTI-LOCK BRAKES - 2.0L ENGINE

^ LAMP - FUEL SHUTOFF - CORROSION/OPEN CIRCUIT AT SPLICE 102/CIRCUIT 9 - HARD START/NO START - VEHICLES BUILT FROM 4/16/92 THROUGH 8/25/94 - WITH SPEED CONTROL AND WITHOUT ANTI-LOCK BRAKES - 2.0L ENGINE

^ WIRING - CORROSION/OPEN CIRCUIT AT SPLICE 102/CIRCUIT 9 - HARD START/NO START - FUEL SHUTOFF LAMP ON - VEHICLES BUILT FROM 4/16/92 THROUGH 8/25/94 - WITH SPEED CONTROL AND WITHOUT ANTI-LOCK BRAKES - 2.0L ENGINE

FORD:
1993-94 PROBE

This TSB article is being republished in its entirety to provide specific engine identification.

ISSUE:
Some vehicles may be hard to start or may not start, or the Fuel Shutoff Lamp may illuminate. This may be caused by corrosion or a short-to-ground at Splice 102 (Circuit 9).

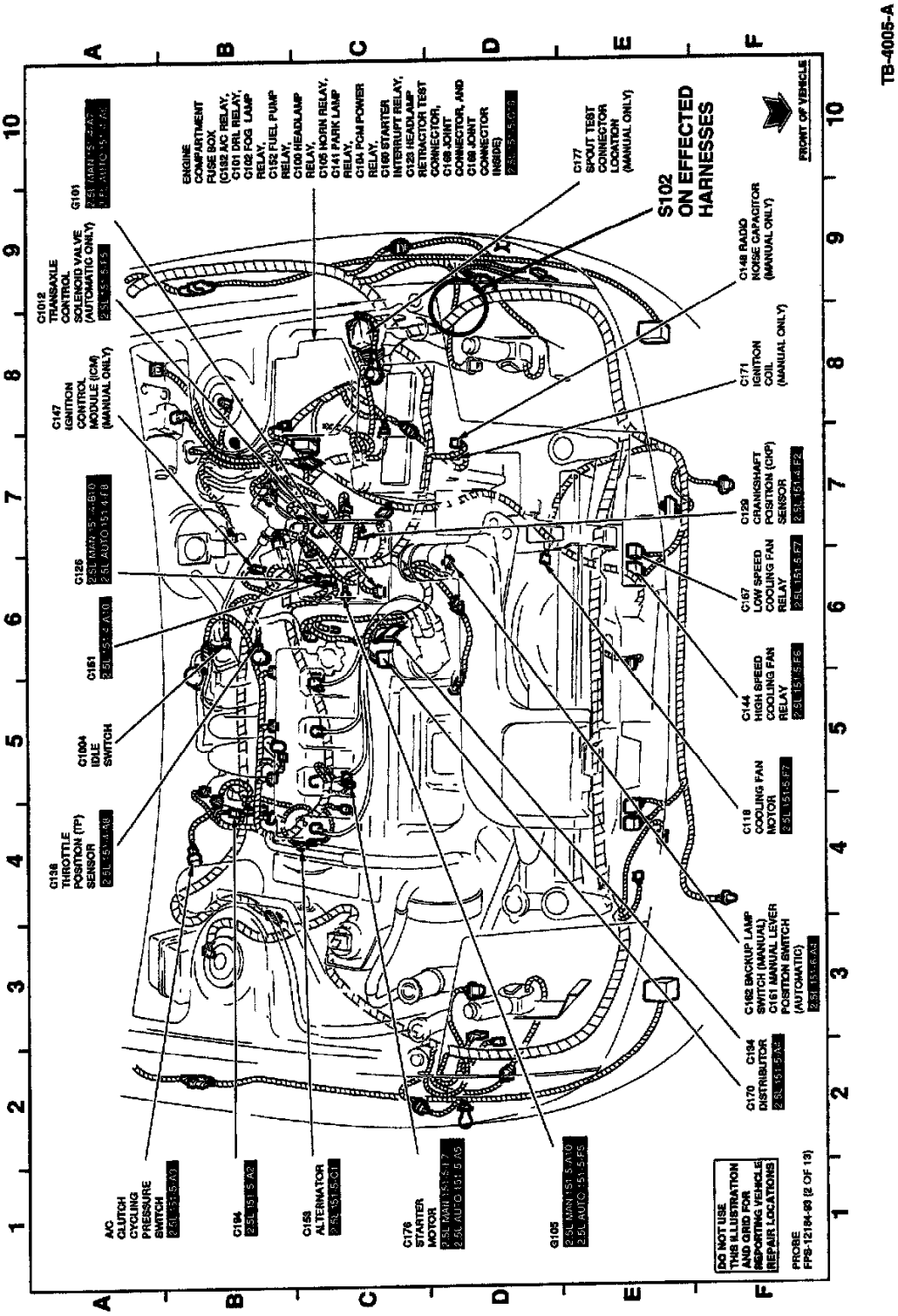

Figure 1

ACTION:
Inspect Splice 102 (see Figure 1) for corrosion or short-to-ground and, if necessary, repair the splice. Cover with self-sealing heat shrink tubing. This repair will minimize future shorts/corrosion at the splice. Refer to the following Service Procedure for details.

SERVICE PROCEDURE

1. Perform a voltage drop test across Circuit 9 from the 30 amp F/P INJ fuse to generator "S" terminal, PCM power relay and fuel pump relay to identify the concern.

2. If voltage drop of 0.2 volts or greater is indicated, Splice 102 requires repair.

3. To inspect, remove the left headlamp assembly to gain access to the harness.

   Locate Splice 102 in the engine compartment under the left headlamp assembly in the main harness.

5. If corrosion is found, cut out the splice and re-solder. If not corroded, but evidence of shorting is present, proceed to Step 6.

6. Apply adhesive-lined heat-shrinkable tubing (WT5627-A) (ESB-M99D56-A2) to seal the repaired splice. Refer to Pages 12-1 and 13-1 in the 1994 Probe EVTM (Electrical and Vacuum Troubleshooting Manual).

PART NUMBER	PART NAME
T5627-A	Heat Shrink Tubing - Self-Sealing (Pk/5)

OTHER APPLICABLE ARTICLES: NONE

SUPERSEDES: 94-25-4

WARRANTY STATUS: Eligible Under The Provisions Of Bumper To Bumper Warranty Coverage

OPERATION	DESCRIPTION	TIME
950508A	Repair Open Or Corroded Splice 102	0.7 Hr.

DEALER CODING

BASIC PART NO.	CONDITION CODE
14290	X1

OASIS CODES: 203200, 206000, 602300, 603300

Technical Service Bulletin # **94116** Date: **940601**

Radio - Front Door Speakers Inoperative

Article No.
94-11-6

06/01/94

RADIO - FRONT SPEAKERS INOPERATIVE - VEHICLES BUILT BEFORE 10/31/93

FORD:
1993-94 PROBE

ISSUE:
The front door speakers may be inoperative because of water entry into the inner door area.

ACTION:
Install a rain shield on the inner door around the speaker to deflect water away from the speaker. Refer to the following procedure for service speakers.

1. Disconnect the battery ground cable.

2. Remove the front door trim panel. Refer to the 1993/94 Probe Service Manual, Section 01-05, for the removal procedure.

3. Remove the three (3) speaker screws.

CAUTION:
HANDLE THE SPEAKER CAREFULLY TO AVOID DAMAGING THE CONE DURING REMOVAL AND INSTALLATION.

4. Pull the speaker out and disconnect the electrical connector.

5. Pull the plastic liner back away from the speaker opening.

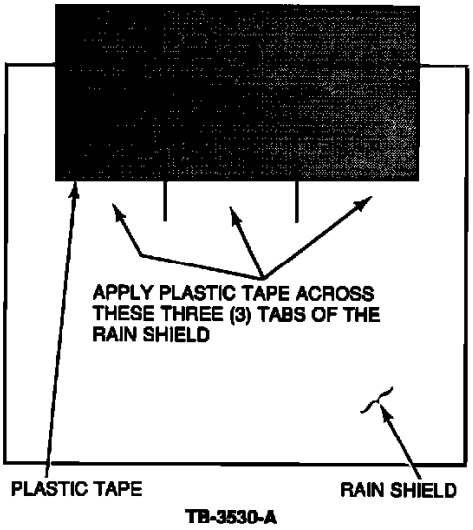

Figure 1

6. Apply plastic tape across the three (3) tabs of the rain shield (F32Z-18B808-A) as shown in Figure 1.

NOTE:
IF THE OLD SPEAKER HAS A PLASTIC COVER, DO NOT REUSE IT ON THE NEW SPEAKER.

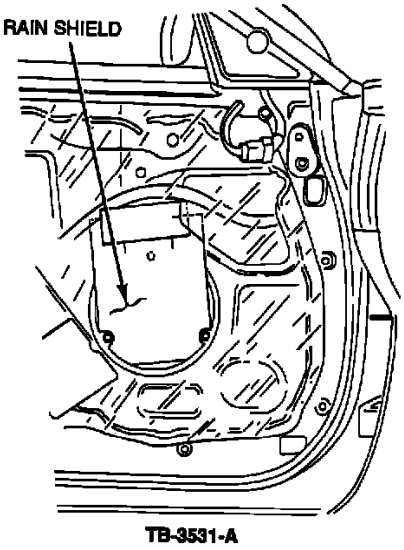

Figure 2

7. Install the bottom edge of the rain shield through the speaker hole in the door. Temporarily hold the rain shield by sticking plastic tape to the door, just above the speaker opening, as shown in Figure 2.

8. Replace the old speakers with new units (F32Z-18808-D), installing the two (2) bottom screws first in order to locate the top screw hole.

9. Remove and discard the plastic tape used to temporarily hold the rain shield.

10. Reinstall the door trim panel. Refer to the 1993/94 Probe Service Manual, Section 01-05, for the installation procedure.

PART NUMBER	PART NAME	CLASS
F32Z-18B808-A	Rain Shield (1 Set)	A
F32Z-18808-D	Speaker	B

OTHER APPLICABLE ARTICLES: NONE
WARRANTY STATUS:
Eligible Under The Provisions Of Bumper To Bumper Warranty Coverage

OPERATION	DESCRIPTION	TIME
941106AT	Install Rain Shield On Inner Doors Around Speaker (Both Sides)	0.6 Hr.
941106A	Install Rain Shield On Inner	0.4 Hr.

Door Around Speaker (One Side)

DEALER CODING

BASIC PART NO.	CONDITION CODE
18808	08

OASIS CODES: 207000

Technical Service Bulletin # **93S64** Date: **930601**

Overview of Recall 93S64

RECALL NUMBER 93S64

Date: June, 1993

At Dealers By as Req'd. 0% of Parts Direct Shipped to Dealers

At PDC by

Date in Owner Letter: June, 1993

TO: All Ford Dealers

SUBJECT:
Safety Recall 93S64 - Certain 1993 Model Year Probes - Liftgate Strut Pivot Pin.

AFFECTED VEHICLES
Certain 1993 Model Year Probes produced from April 16, 1992, through June 7, 1992.

REASONS FOR RECALL
On some of the affected vehicles, one of the lower pivot pins of the liftgate struts may separate from its mount. This may cause the liftgate to drop suddenly.

Approximately 4000 vehicles are affected by this recall. Of these, approximately 100 are suspected of having an undersized rivet head on one of the liftgate strut pivot pins.

To correct this condition, the pivot pins will be inspected and, if necessary, the liftgate struts will be replaced.

RENTAL CARS
Should the struts require replacement, Ford Motor Company will pay costs (not to exceed $25 per day) associated with rental vehicles except fuel costs which will be at owner's expense.

SPECIAL TOOL
Each dealer, (Ford Dealers Only) will receive a special tool to be used in the inspection described in the technical section of this letter. A tool is included with this letter.

ATTACHMENTS
Attachment I
- Administrative Information

Attachment II
- Labor Allowances
- Parts Ordering Information

Attachment III
- Technical Information

Attachment I - Administrative Information

ATTACHMENT I

OASIS
YOU MUST USE OASIS TO DETERMINE IF A VEHICLE IS ELIGIBLE FOR THIS RECALL.

PLEASE NOTE
CORRECT ALL VEHICLES IN STOCK BEFORE DELIVERY. FEDERAL LAW REQUIRES DEALERS TO COMPLETE ANY OUTSTANDING SAFETY RECALL SERVICE BEFORE A NEW VEHICLE IS DELIVERED TO THE BUYER OR LESSEE. VIOLATION OF THIS REQUIREMENT BY A DEALER COULD RESULT IN A CIVIL PENALTY OF UP TO $1,000 PER VEHICLE.

PROMPTLY CORRECT

1993 Ford Probe L4-121 2.0L DOHC VIN A MFI

Affected vehicles on the enclosed list.

Other eligible vehicles which are brought to your dealership.

DEALER-OWNER CONTACT
Immediately contact any owner whose name is not on the list. Give owner a copy of the Owner Letter, and arrange a service date.

DISTRICT CONTACT
Advise district office if:
- an owner cannot be contacted.
- an owner does not make a service date.

FPSD CONTACT
Talk with your FPSD Service Zone Manager about all matters.

FORM 1863/64
Submit 1864 claims using DWE for all completed vehicles. You may use your original 1863 for your record file copy.

WARRANTY AND POLICY MANUAL
See Section 6.3 pages 5 through 8 of your Warranty and Policy Manual for claims preparation.

PARTS RETURN
See Attachment II, for information on shipping of removed strut(s) to the Warranty Parts Return Center

Attachment II - Labor and Parts Information

ATTACHMENT II

SAFETY RECALL 93S64

1993 Probe Liftgate Strut Pivot Pin

LABOR ALLOWANCES

Inspect

0.2 Hrs. - Insert in Box "A" on Form 1864

Remove/Install One Liftgate Strut (Includes Inspection Time Above, and Supplementary Time for Second Drive-in of Vehicle).

0.4 Hrs. - Insert in Box "B" on Form 1864

Remove/Install Both Liftgate Struts (Includes Inspection Time Above, and Supplementary Time for Second Drive-in of Vehicle).

0.5 Hrs. - Insert in Box "C" on Form 1864

Administrative Allowance 0.1 Hrs.

NOTE:
Add 0.1 hour Administrative Allowance to the total repair time.

PARTS REQUIREMENTS
Parts will not be direct shipped for this recall. Order your parts by calling Renkim Corporation (1-800-325-5621). When ordering your parts, please be prepared to do the following:

^ Announce Recall 93S64
^ Give your name, Dealer name, P&A code
^ VIN, engine, transmission, rear wiper/washer options

PARTS RETURN

Return the removed strut(s), freight prepaid to:

Warranty Parts Return Center
1285 South Mill Street
Plymouth, Mi. 48170
c/o Safety Recall 93S64

CLEARLY MARK ON OUTSIDE OF BOX: PROGRAM 93S64

Wire tag the removed strut(s) - include your:

1993 Ford Probe L4-121 2.0L DOHC VIN A MFI

- P&A Code
- Vehicle VIN Number
- Program 93S64

NOTE:

The Warranty Parts Return Center will not be issuing an FPS-700 for the return of this strut(s). Therefore, return removed strut(s) immediately.

Attachment III - Technical Instructions

SAFETY RECALL 93S64
1993 PROBE LIFTGATE STRUT

TECHNICAL INSTRUCTIONS

INSPECTION:

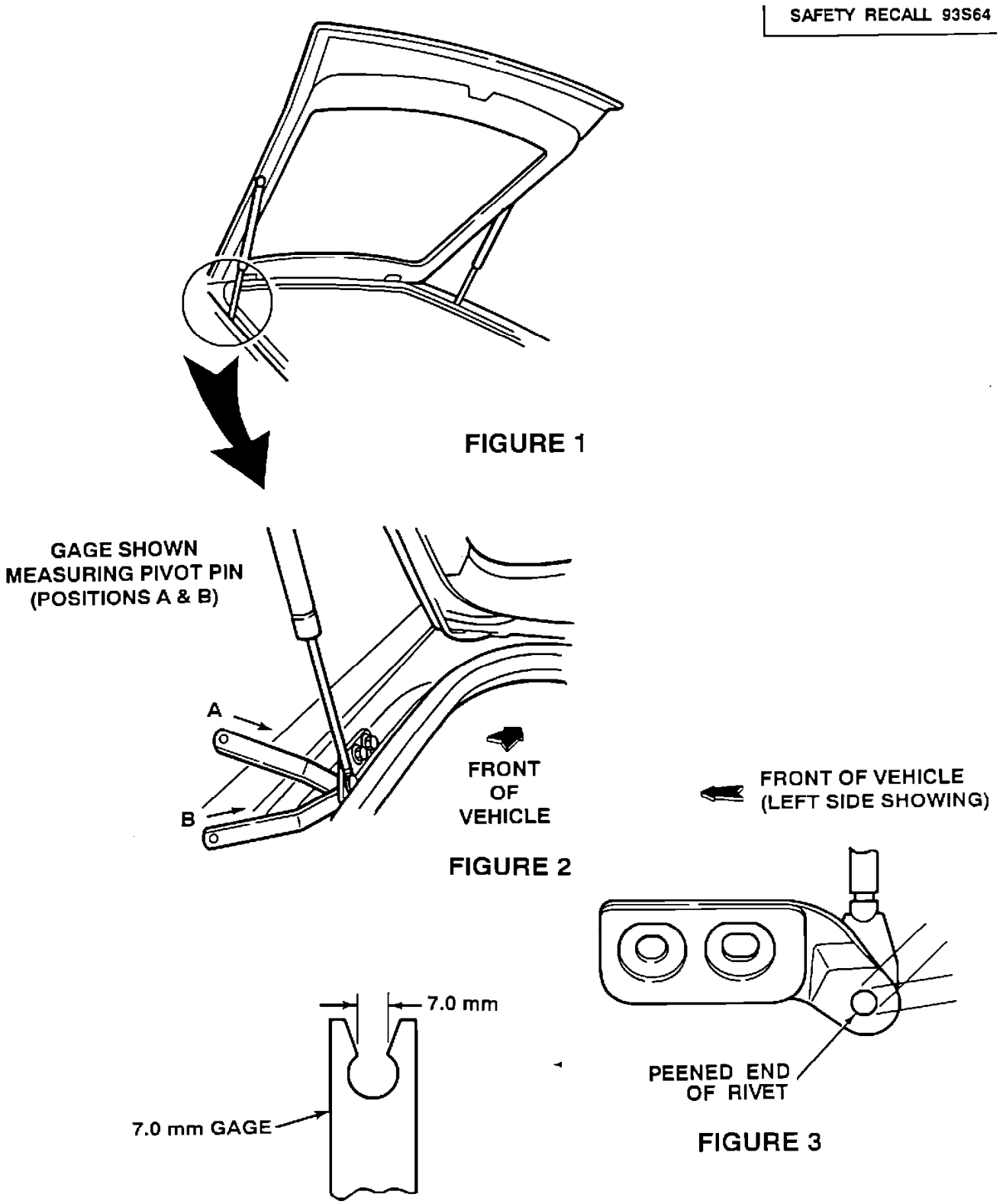

1. Open the liftgate. Figure 1.

2. Measure the diameter of the peened end (bracket side) of the rivet (see Figure 3) that attaches the liftgate strut, using the 7.0 mm gauge provided. It should be measured in at least two different places. See A & B, Figure 2.

(NOTE:
This Is done by placing the open end of the gauge flat against the bracket and sliding it toward the peened end of the rivet).

3. If either measurement result is:

   a. OVER 7.0 mm Gauge won't slide by peened end. This liftgate strut is O.K., repeat step two for the other side.

   b. UNDER 7.0 mm Gauge will slide by peened end. This lift gate strut MUST be replaced. Proceed to the replacement procedure.

IMPORTANT NOTICE:
IF AFTERMARKET ACCESSORIES (I.E. SPOILERS ETC.) HAVE BEEN ADDED TO THE LIFTGATE ON THIS 1993 PROSE:

1. The factory struts may have been replaced. If the factory struts have been replaced by aftermarket struts do nothing. Release the vehicle.

2. If it is necessary to replace the factory liftgate strut(s) per safety recall 93S64, verify that the replacement struts are adequate for proper liftgate operation.

REMOVAL:

REPLACEMENT PROCEDURE (TWO PEOPLE NEEDED... A TECHNICIAN & ASSISTANT)

1. Open the liftgate, have an assistant hold the liftgate.

2. Remove the strut from the ball stud, remove and discard the ball stud.

3. Remove the two lower bolts (12 mm.) from the bottom strut bracket and remove strut.

INSTALLATION:

1. Install the new ball stud and tighten to 16-22 N-m (12-16 ft.lbs.), and install (push) the new strut on the ball stud.

2. Install the two lower bolts to the bottom strut bracket and tighten to 9-12 N-m (79-122 in.lbs.)

Owner Letter

Serial Number: 12345678901234567 93S64 June, 1993

Mr. John Sample
123 Main Street
Anywhere, USA 12345

This notice is sent to you in accordance with the requirements of the National Traffic and Motor Vehicle Safety Act.

Ford Motor Company has determined that a defect which relates to motor vehicle safety exists in certain 1993 model year Probe vehicles.

SAFETY DEFECT
Some of the affected vehicles may have been produced with an undersized rivet head on one of the liftgate strut pivot pins.

PROBLEM
Under certain conditions, one of the liftgate struts may separate from its mount. Should this occur, the remaining strut would not support the liftgate in an open position. This may cause the liftgate to drop suddenly, which could result in injury if someone is struck by the descending liftgate.

REPAIRS
At no charge to you, your dealer will inspect the liftgate struts and, if necessary, replace them. Dealers currently have instructions and parts ordering information.

HOW LONG WILL IT TAKE?
The time needed for this service is about one hour. However, due to service scheduling times, your dealer may need your vehicle for one full working day. If the inspection reveals that a replacement liftgate strut is required, your dealer will have to order the required part.

RENTAL CARS
Should one of the liftgate struts of your Ford Probe require replacement, your dealer will provide you with a free (except for fuel) courtesy car until the replacement liftgate strut arrives.

CALL YOUR DEALER
Call your dealer without delay. Ask for a service date.

When you bring your car in, give the dealer this letter.

If you misplace this letter, your dealer will still do the work, free of charge.

CHANGED ADDRESS OR SOLD THE CAR?
Please fill out the enclosed prepaid postcard and mail it to us if you have changed your address or sold the car.

If the dealer doesn't make the repair promptly and without charge, you may contact the Ford Customer Assistance Center, 300 Renaissance Center, P. 0. Box 43360, Detroit, Michigan 48243. You also may send a complaint to the Administrator, National Highway Traffic Safety Administration, 400 Seventh Street, S.W., Washington, D.C. 20590 or call the toll free Auto Safety Hotline 1-800-424-9393 (Washington, D.C. area residents may call 366-0123).

We regret the inconvenience this service may cause you, but we want you to have the work done for your safety and satisfaction with your Ford Probe.

Technical Service Bulletin # **94193** Date: **940921**

Liftgate Shock - Will Not Support Liftgate

Article No.
94-19-3

09/21/94

LIFTGATE - HYDRAULIC LIFTS MAY NOT SUPPORT HATCH WHEN AFTERMARKET SPOILER/WING IS ADDED

FORD:
1993-94 PROBE

ISSUE:
When an aftermarket spoiler/wing is installed on the rear liftgate, the liftgate may not stay in a full up position when opened. Production level hydraulic lifts may not be able to support the added weight.

ACTION:
Replace the hydraulic lifts with increased capacity hydraulic lifts which can support the added weight of aftermarket spoiler/wings up to 10 lbs. (5 kg). Refer to the Probe Service Manual, Section 01-03, for service details.

CAUTION:
MAKE SURE THE PROPER LIFTS ARE BEING USED. USING THE INCORRECT LIFTS COULD CAUSE PERSONAL INJURY. ADDING MORE WEIGHT THAN SPECIFIED TO THE LIFTGATE COULD ALSO RESULT IN INJURY. NO MORE THAN 10 LBS (5 Kgs) MAY BE ADDED TO THE LIFTGATE.

PART NUMBER	PART NAME	CLASS
F42Z-61408A10-AA	Hydraulic Lift	C

OTHER APPLICABLE ARTICLES: NONE
WARRANTY STATUS: INFORMATION ONLY
OASIS CODES: 108000, 111000

Technical Service Bulletin # **NHTSA93V058000** Date: **930406**

Recall 93V058000: Liftgate Pivot Pin Defect

THE LOWER PIVOT PIN THAT JOINS THE LIFTGATE GAS STRUT TO THE BODY CAN SEPARATE FROM THE LOWER STRUT MOUNTING BRACKET DUE TO AN UNDERSIZED RIVET HEAD.

PIVOT PIN SEPARATION CAUSES THE LIFTGATE TO DESCEND SUDDENLY, RESULTING IN AN INJURY IF SOMEONE IS STRUCK BY THE LIFTGATE.

REPLACE LIFTGATE STRUT ASSEMBLIES HAVING UNDERSIZED PIVOT PIN RIVET HEAD

DIAMETERS WITH ASSEMBLIES WITH ADEQUATE PIVOT PIN RIVET HEADS.

OWNER NOTIFICATION BEGAN JUNE 25, 1993. OWNERS WHO TAKE THEIR VEHICLES TO AN AUTHORIZED DEALER ON AN AGREED UPON SERVICE DATE AND DO NOT RECEIVE THE FREE REMEDY WITHIN A REASONABLE TIME SHOULD CONTACT FORD AT 800-392-3673. ALSO CONTACT THE NATIONAL HIGHWAY TRAFFIC SAFETY ADMINISTRATION'S AUTO SAFETY HOTLINE AT 1-800-424-9393.

Technical Service Bulletin # **97-17-3** Date: **970818**

Sliding Roof Panel - Rattle/Squeak/Creak Noise

Article No.
97-17-3

1993 Ford Probe L4-121 2.0L DOHC VIN A MFI

08/18/97

^ SLIDING ROOF PANEL - NOISE - "RATTLE/SQUEAK/CREAK" FROM SLIDING ROOF PANEL AREA

^ NOISE - "RATTLE/SQUEAK/CREAK" FROM SLIDING ROOF PANEL AREA

FORD:
1993-95 PROBE

This TSB article is being republished in its entirety to revise the service labor Time for Operation A.

ISSUE:
A "rattle, squeak, or creak" noise may be heard from the sliding roof panel area on some vehicles. This may be caused by tight tolerances between the sliding roof panel motor and roof panel.

ACTION:
Insulate the sliding roof panel motor from the roof panel. Refer to the following Service Procedure for details.

PART NUMBER	PART NAME
(Obtain Locally)	Foam Tape
(Obtain Locally)	Cloth Tape
(Obtain Locally)	Felt Tape

OTHER APPLICABLE ARTICLES: NONE

SUPERSEDES: 95-25-1

WARRANTY STATUS: Eligible Under The Provisions Of Bumper To Bumper Warranty Coverage

OPERATION	DESCRIPTION	TIME
971703A	Insulate Sliding Roof Panel Assembly	2.1 Hrs.

DEALER CODING

BASIC PART NO.	CONDITION CODE
61502A58	56

OASIS CODES: 105000, 304000, 702000, 702100, 702200, 702300

Service Procedure

NOTE:
IMPROVEMENTS TO THE SLIDING ROOF PANEL WERE MADE AT VARIOUS TIMES IN PRODUCTION. SOME SLIDING ROOF PANELS MAY ALREADY HAVE SOME OF THE SERVICE ACTIONS IN PLACE. PERFORM ONLY THE SERVICE ACTIONS REQUIRED.

1. Open sliding roof panel to "tilt up" position.

2. Disconnect the negative battery cable.

3. Remove headliner by referring to the appropriate Probe Service Manual, Section 01-05.

4. Remove the sliding roof panel by referring to the Service Manual, Section 01-17.

5. Remove roof opening frame by referring to the Service Manual, Section 01-17.

6. Lay roof opening frame on flat surface with motor facing down.

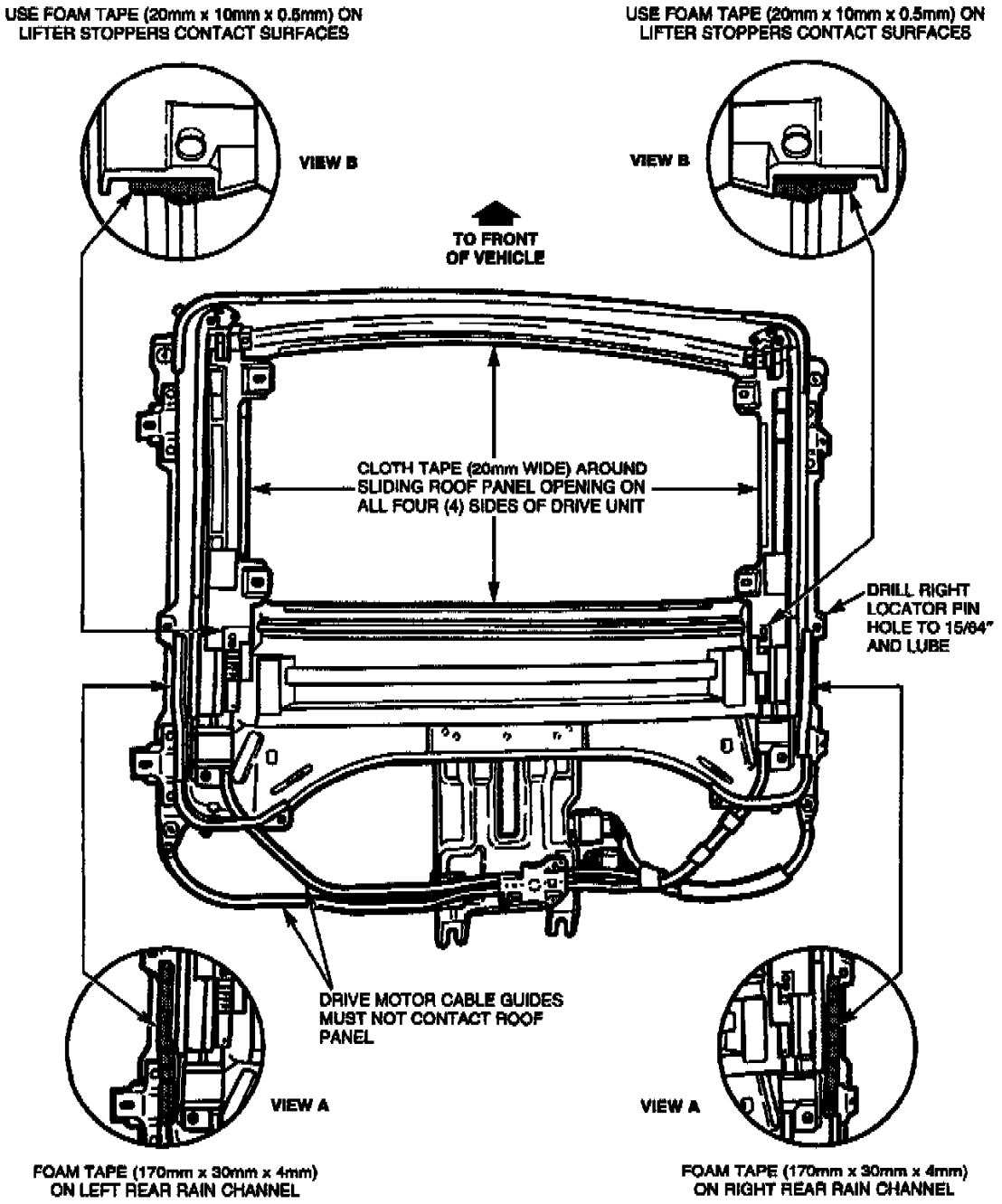

Figure 1

7. Refer to Figure 1 for Steps 7a through 7d.

   a. Apply foam tape (approximately 170 mm long x 30 mm wide x 4 mm thick) to both outer edges of rain channel (Figure 1, View A).

   b. Apply felt tape (approximately 20 mm long x 10 mm wide x 0.5 mm thick) to both lifter stoppers contact surfaces (Figure 1, View B).

   c. Apply cloth tape (approximately 20 mm wide) to sliding roof panel opening on all four (4) sides of drive unit.

   d. Using a 15/64" drill bit, enlarge the RH sliding roof panel drive locator hole and lubricate locator hole with teflon grease or equivalent.

8. Turn roof opening frame over so that the motor is facing up.

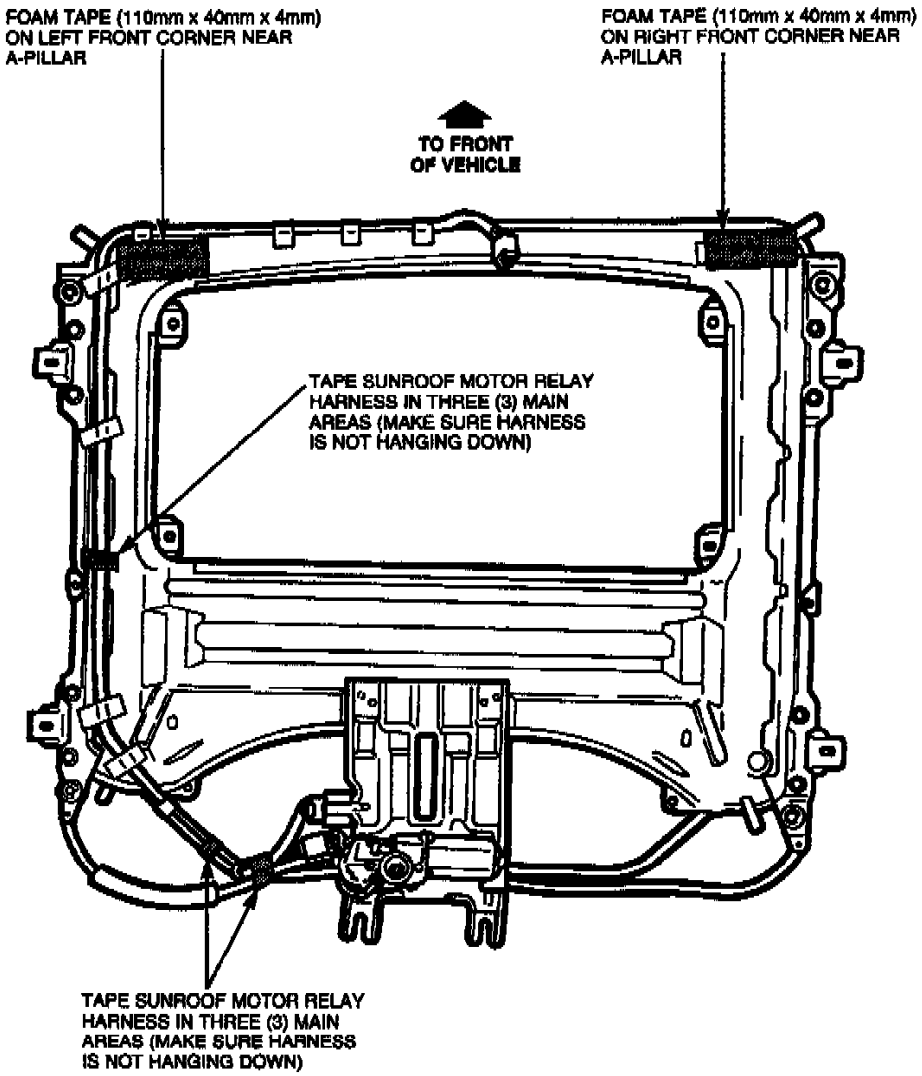

Figure 2

TB-4424-A

9. Refer to Figure 2 for Steps 9a and 9b.

   a. Apply foam tape (approximately 110 mm long x 40 mm wide x 4 mm thick) to both front corners of sliding roof panel drive.

   b. Secure sliding roof panel drive wire harness to sliding roof panel drive at areas indicated in Figure 2.

NOTE:
HARNESS SHOULD NOT HANG DOWN WHERE IT COULD CONTACT THE HEADLINER.

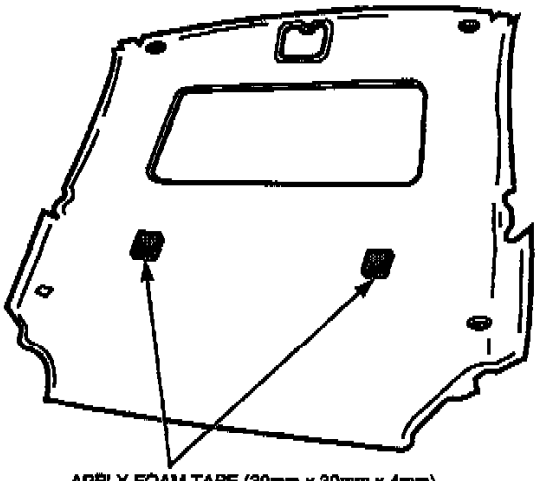

Figure 3

ROOF HEADLINING

TB-4425-A

10. Apply foam tape (approximately 30 mm long x 30 mm wide x 4 mm thick) to backside of headliner's styrofoam blocks (Figure 3).

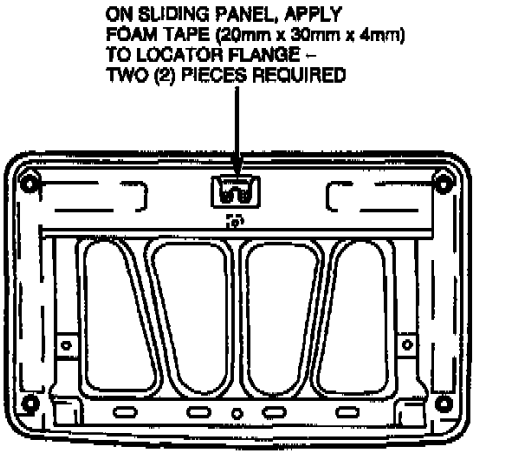

Figure 4

11. Apply two (2) pieces of foam tape (approximately 20 mm long x 30 mm wide x 4 mm thick) to sliding panel backside at locator flange (Figure 4).

12. Reinstall roof opening frame by referring to the Service Manual, Section 01-17.

NOTE:
MAKE SURE THAT THE DRIVE MOTOR CABLE GUIDES DO NOT CONTACT THE ROOF PANEL WHEN INSTALLED (FIGURE 1).

13. Reinstall sliding roof panel by referring to the Service Manual, Section 01-17.

14. Adjust roof panel by referring to the Service Manual, Section 01-17.

15. Reinstall headliner by referring to the Service Manual, Section 01-05.

16. Reconnect negative battery cable.

17. Road test, checking for squeak rattle and windnoise from the sliding roof panel area.

Technical Service Bulletin # **95121** Date: **950619**

Windshield - Material Usage Procedure

Article No.
95-12-1

06/19/95

GLASS - WINDSHIELD - URETHANE MOUNTED GLASS MATERIAL USAGE PROCEDURE - SERVICE TIP.

FORD
1981-95 ESCORT
1983-95 THUNDERBIRD
1984-94 TEMPO
1986-95 TAURUS
1988-93 FESTIVA
1989-95 PROBE
1990-95 CROWN VICTORIA
1995-95 ASPIRE
1995 CONTOUR, MUSTANG

LINCOLN-MERCURY
1982-95 CONTINENTAL
1983-95 COUGAR
1984-94 TOPAZ
1986-95 SABLE
1987-89 TRACER
1990-95 GRAND MARQUIS, TOWN CAR
1991-95 TRACER
1993-95 MARK VIII
1995 MYSTIQUE

1993 Ford Probe L4-121 2.0L DOHC VIN A MFI

LIGHT TRUCK
1983-95 RANGER
1984-90 BRONCO II
1986-95 AEROSTAR
1987-95 BRONCO, F-150-350 SERIES, F-47
1992-95 ECONOLINE
1993-95 VILLAGER
1995 WINDSTAR

ISSUE:
Essex windshield replacement products have a limited shelf life. Products should be discarded if they have exceeded their shelf life.

ACTION:
Refer to the following text to decode the manufacturing (batch) date from the container. Also, refer to the Service Procedure for proper installation procedures.

HOW TO READ ESSEX BATCH NUMBERS

Example: JL158601AA

Year: J
Month: L
Day: 15
Essex ARG: 8601
Batch: AA

This batch was made December 15, 1995 at the Essex plant, batch sequence AA.

Monthly Code Guide:

^ A - January
^ B - February
^ C - March
^ D - April
^ E - May
^ F - June
^ G - July
^ H - August
^ I - September
^ J - October
^ K - November
^ L - December

Year Code Guide:

^ J - 1995
^ K - 1996
^ L - 1997
^ M - 1998

URETHANE MOUNTED GLASS MATERIAL

USAGE PROCEDURE

REMOVAL

1. If necessary, remove the windshield wiper mounting arm, pivot shafts and leaf screen along cowl. Remove the inside rear view mirror, all windshield garnish mouldings, A-pillar mouldings and lower headliner.

2. Use Rotunda Interior Cut-Out Knife (164-R2450 or 164-R2451) or equivalent to cut urethane. Refer to the manufacturer's instructions when using tool.

CAUTION:
USE CARE WHEN CUTTING THROUGH SEAL TO AVOID DAMAGE TO THE INSTRUMENT PANEL, REAR PACKAGE TRAY, HEADLINER OR INTERIOR TRIM.

3. Remove glass from vehicle using a suitable glass removal tool.

INSTALLATION

1. Trim the urethane left on the flange with a utility knife or razor blade until the surface is smooth and free of cuts. Even up the urethane remaining on the pinch weld so it is all at the same level (approximately 1/16" or 1.6 mm).

2. Apply Essex Urethane Pinchweld Primer U-413 to any sheet metal that has been exposed along the pinch weld. Let dry for a minimum of 6-10 minutes before proceeding. Do not apply primer to existing urethane bead.

3. Properly align glass to body. Place the glass in the opening and center it from top to bottom and side to side with about equal clearance on all sides. Using masking tape or crayon, make alignment points on each of the four (4) sides of the glass and body.

4. Remove the windshield from the vehicle and place it inside up, on a low stable work surface.

5. Clean the glass with a non-alcohol based glass cleaner such as Essex Glass And Surface Cleaner GC-800.

6. Install rear view mirror bracket. Refer to the appropriate Service Manual for installation details.

7. Apply two (2) coats of Urethane Glass Prep U-401 to inner edge of the windshield. Wipe off material immediately after each application.

NOTE:
WIPE OFF URETHANE GLASS PREP U-401 IMMEDIATELY AFTER EACH APPLICATION.

8. Apply Essex Primer U-402 to the same glass area as U-401. Allow to dry 5 minutes.

9. Install foam dam tape on pinch weld, if required.

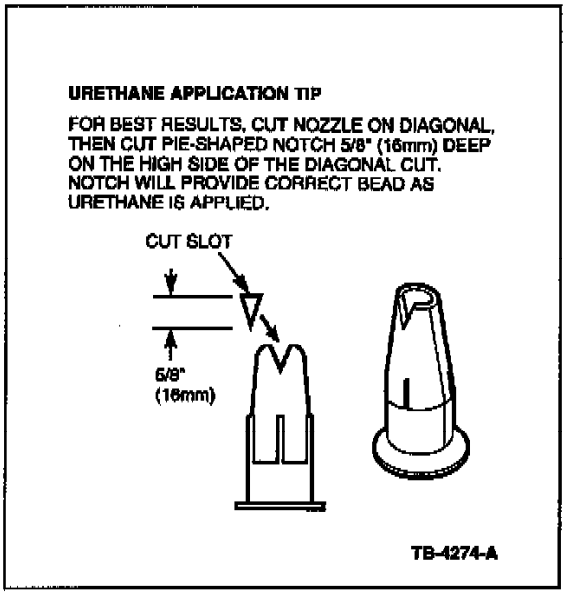

Figure 1

10. Cut the nozzle of the Essex Urethane Auto Glass Adhesive U-4OOHV (Figure 1) and apply a triangular bead of urethane 5/8" (16 mm) by 3/8" (9 mm) wide around the perimeter of the pinch weld.

11. Install the glass into the opening taking care to align the marks previously designated. Press glass into place until full contact is made with urethane adhesive. Glass must be installed before urethane skins over.

NOTE:
BEFORE INSTALLING GLASS, OPEN THE WINDOWS TO PREVENT THE GLASS FROM BEING PUSHED OUT BY AIR PRESSURE IF A DOOR IS CLOSED.

12. If necessary, reinstall all mouldings and trim previously removed.

CAUTION:
WHEN REPLACING URETHANE INSTALLED GLASS, THE VEHICLE SHOULD NOT BE DRIVEN UNTIL THE URETHANE HAS CURED. THIS WILL PREVENT THE GLASS FROM BEING JARRED OUT OF POSITION AND HELP ENSURE APPROPRIATE WINDSHIELD RETENTION TO MEET SAFETY AND STRUCTURAL REQUIREMENTS.

NOTE:
USE ONLY URETHANE FOR SERVICE OF AIR AND WATER LEAKS ON URETHANE INSTALLED GLASS.

ESSEX URETHANE GLASS INSTALLATION PRODUCTS			
Product	**Package Size**	**Essex Part Number**	**Shelf Life**
Essex Urethane Glass Prep	4 Fl. Oz.	U-401	6 Months
Essex Urethane Glass Primer	4 Fl. Oz.	U-402	6 Months
Essex Urethane Pinch Weld Primer	4 Fl. Oz.	U-413	6 Months
Essex Urethane Auto Glass Adhesive	10.5 Oz.	U-400HV	9 Months
Norton Foam Dam Tape	20' Roll	NFD-3229	
Essex Glass And Surface Cleaner	22 Oz.	GC-800	

These products are required for urethane mounted glass replacement:

To locate the nearest distributor of Essex glass replacement products, contact the following locations:

For North America or other:

^ Essex ARG

^ 555 Gaddis Blvd.

^ Dayton, Ohio 45403

^ Phone Within North America: (800) 453-3779

^ Phone Outside North America: (513) 254-1550

^ Fax: (513) 254-3779

For Europe:

^ Gurit-Essex AG

^ CH-8807 Freienbach

^ Phone: (055) 471121

^ Fax: (055) 486738

OTHER APPLICABLE ARTICLES: NONE

WARRANTY STATUS: INFORMATION ONLY

OASIS CODES: 102000

Technical Service Bulletin # **96221** Date: **961021**

Windshield/Interior Glass - Fog/Film

Article No.
96-22-1

10/21/96

WINDSHIELD AND INTERIOR GLASS - FOG/FILM

FORD:

1984-86 LTD
1984-88 EXP
1984-94 TEMPO
1984-97 CROWN VICTORIA, ESCORT, MUSTANG, THUNDERBIRD
1986-97 TAURUS
1988-93 FESTIVA
1989-97 PROBE
1994-97 ASPIRE
1995-97 CONTOUR

LINCOLN-MERCURY:

1984-86 MARQUIS
1984-87 LN7, LYNX

1993 Ford Probe L4-121 2.0L DOHC VIN A MFI

1984-92 MARK VII
1984-94 TOPAZ
1984-97 CONTINENTAL, COUGAR, GRAND MARQUIS, TOWN CAR
1986-97 SABLE
1987-89 TRACER
1991-94 CAPRI
1991-97 TRACER
1993-97 MARK VIII
1995-97 MYSTIQUE

MERKUR:

1985-89 XR4TI
1988-90 SCORPIO

LIGHT TRUCK:

1984-97 F-150-350 SERIES
1986-90 BRONCO II
1986-96 BRONCO
1986-97 AEROSTAR, ECONOLINE, RANGER
1988-97 F SUPER DUTY
1991-97 EXPLORER
1993-97 VILLAGER
1995-97 WINDSTAR

This TSB article is being republished in its entirety to update the model years.

ISSUE:
Customers with concerns of glass fogging (film) and with the chemicals that cause this fog can be advised that Ford Motor Company has extensively tested this material and found that it is not a health hazard. The film is caused by some of the chemicals used during the manufacture of the interior trim.

ACTION:
At the present time, there is no known field fix to prevent the window fogging, however, glass cleaner such as Ford Glass Cleaner (E4AZ-19C507-AA) has been found to be the best for film removal.

PART NUMBER	PART NAME
E4AZ-19C507-AA	Ford Glass cleaner

OTHER APPLICABLE ARTICLES: NONE

SUPERSEDES: 86-13-6

WARRANTY STATUS: INFORMATION ONLY

OASIS CODES: 102000, 107000

Technical Service Bulletin # **9332** Date: **930203**

Front Door Glass - Adjustment Procedures

Article No.
93-3-2

February 3, 1993

GLASS - FRONT DOOR - ADJUSTMENT PROCEDURE

FORD: 1993 PROBE

ISSUE:
The 1993 Probe Service Manual does not provide a clear procedure for adjusting the front door glass for windnoise, water leaks and door closures on top of the drip rail concerns.

ACTION:
Use the following front door glass adjustment procedure and specifications to correct door glass windnoise, water leaks and door glass closure on top of the drip rail concerns.

SPECIFICATIONS

The specifications provided in this TSB article have ranges because individual vehicles may vary based on how the door fits on the car body. It may be necessary to change the door glass adjustments to the high or low end of the specifications to correct the concern on your vehicle.

FRONT DOOR GLASS ADJUSTMENT PROCEDURE

1. Check the door and striker for correct adjustment. Repair as necessary. Refer to the 1993 Probe Service Manual, Sections 01-03-5 and 01-14A, for service details.

2. Check the door glass for correct adjustment by following the steps below. Complete the steps in the order provided to obtain the best results.

3. Check the door glass rear height adjustment. Adjust if necessary. The door glass must be removed to make any adjustments. Refer to the 1993 Probe Service Manual for door panel removal and installation procedure.

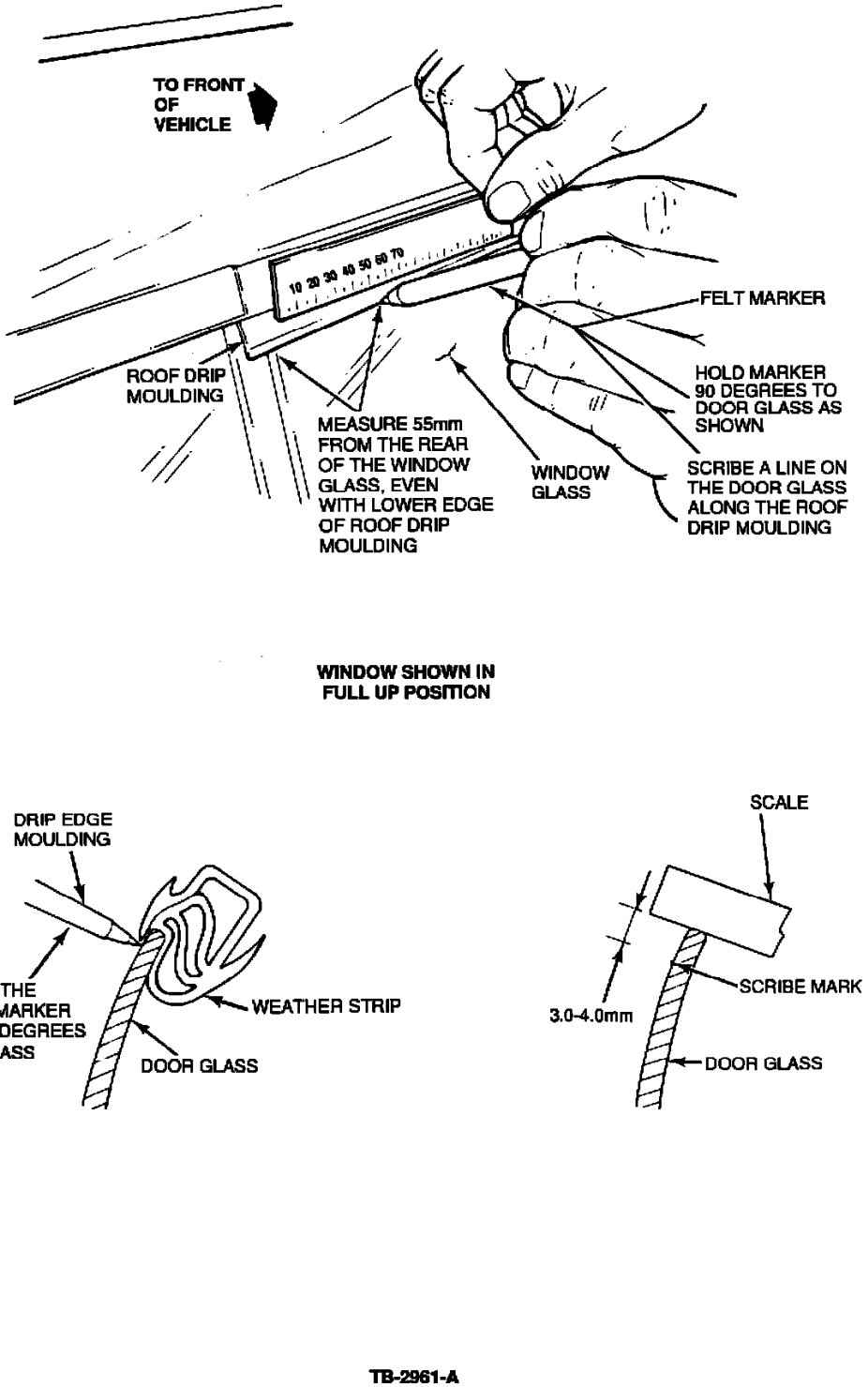

Figure 1

a. With the window in the full up position and the door closed, draw a line along the top of the glass with a felt marker. Locate the line 55

mm from the rear of the glass even with the lower edge of the roof drip moulding, Figure 1. The mark must be 3-4 mm from the top edge of the glass.

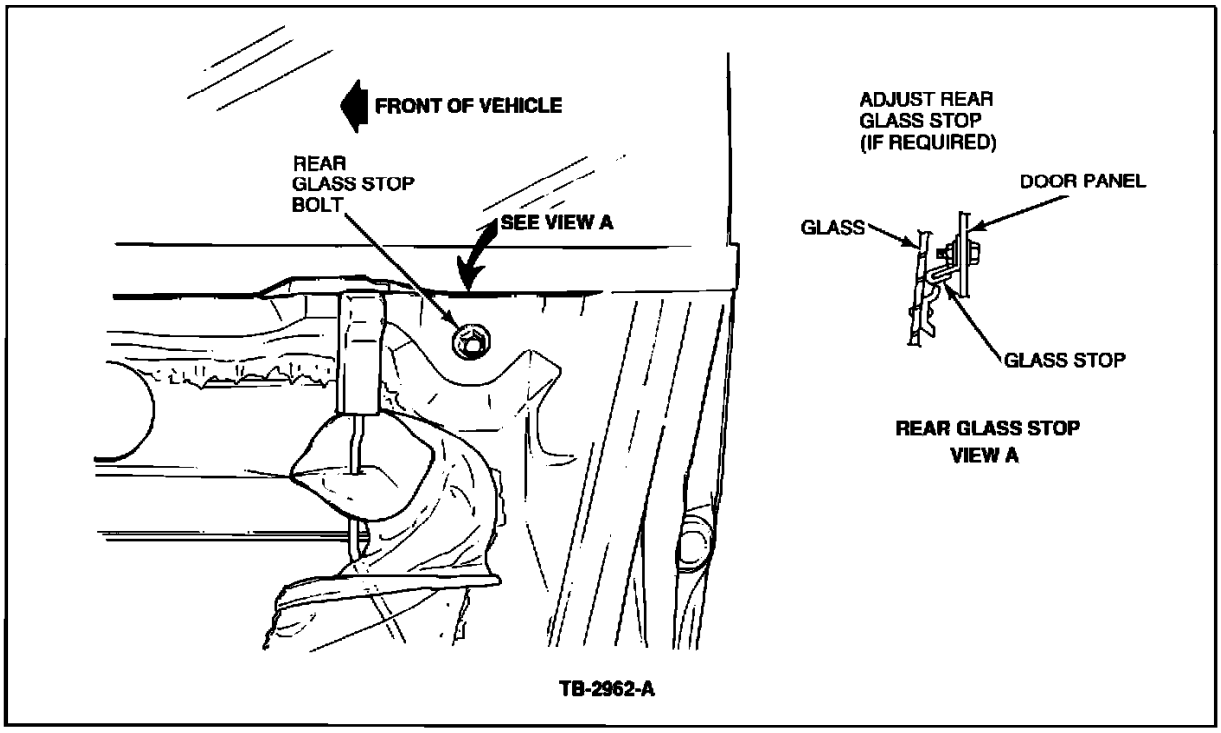

Figure 2

b. If adjustment is required, lower the window 1" (25.4 mm) and move the rear glass stop, Figure 2.

c. Loosen the glass stop bolt just enough to be able to slide the stop and move the stop the same distance the mark is out of specification. Example: If the glass is 1.0 mm too high, lower the stop 1.0 mm.

d. Tighten the glass stop bolt.

e. Raise the window and recheck.

4. Check the door glass rear inboard and outboard adjustment. Adjust if necessary. Do not adjust the door glass front inboard and outboard adjustment.

a. With the glass in the full up position, close the door until the top rear corner of the glass lightly touches the weather strip.

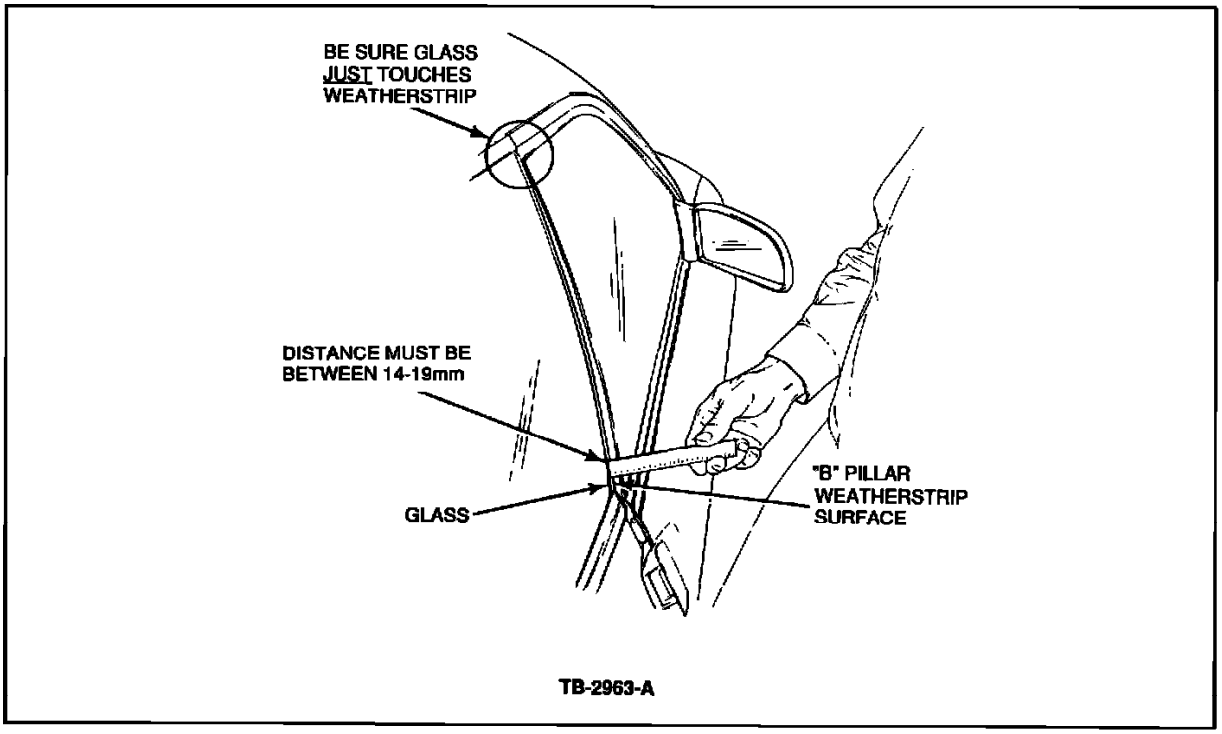

Figure 3

b. Measure the distance between the "B" pillar weatherstrip surface and the outside of the glass. See Figure 3. This distance must be

between 14-19 mm.

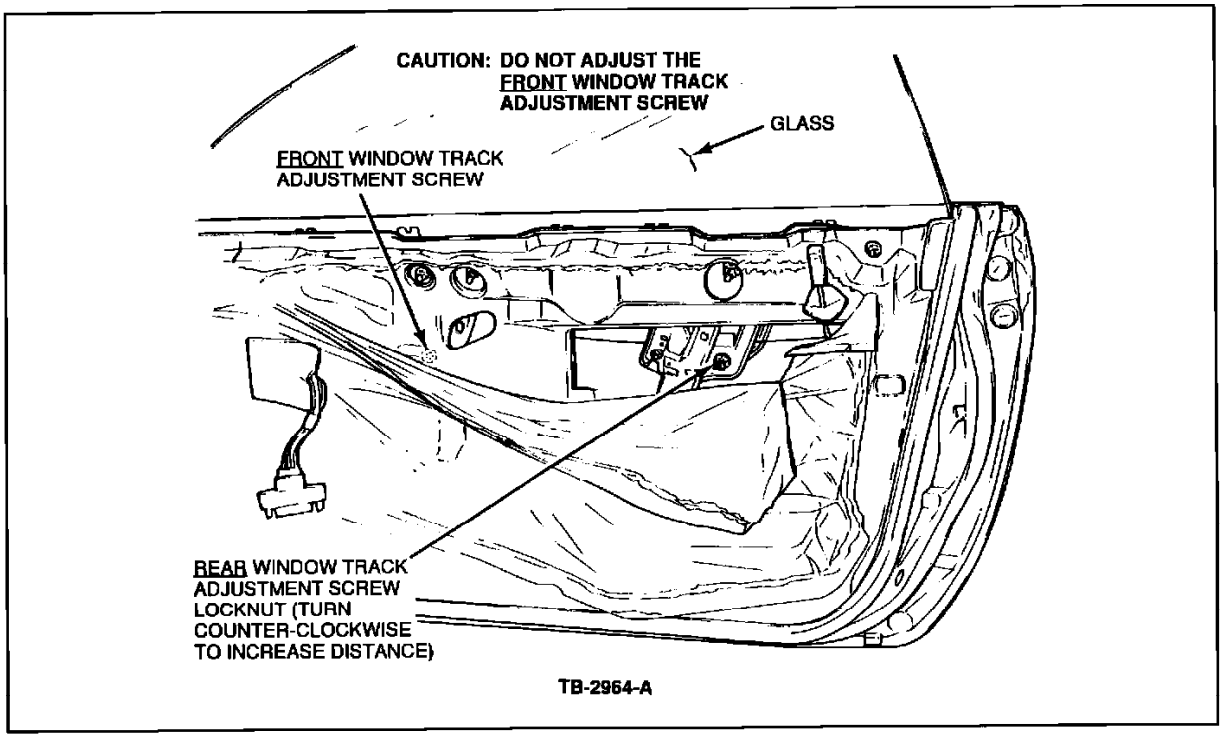

Figure 4

c. To adjust, loosen the adjustment screw locknut, Figure 4, and turn the adjustment screw counter-clockwise to increase the distance.

d. Tighten the adjustment screw locknut.

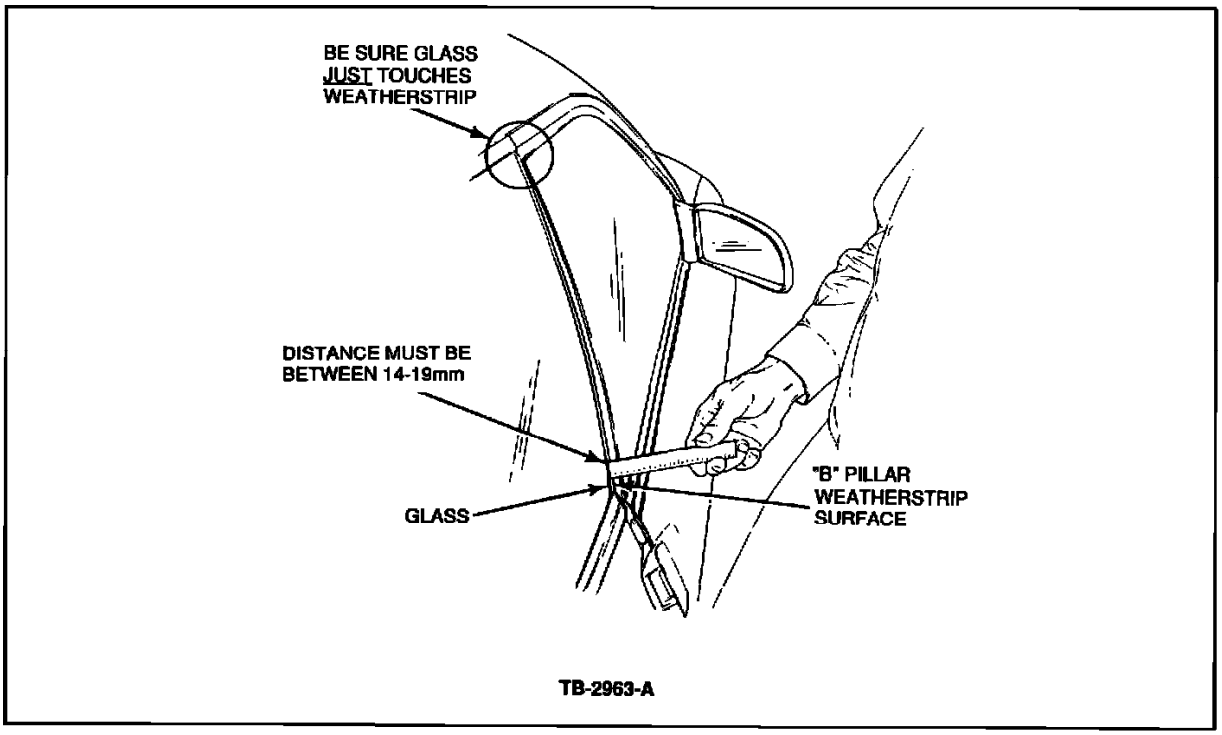

Figure 3

e. Recheck the distance between the "B" pillar weather strip surface and the outside of the glass. See Figure 3.

5. Check the door glass front height adjustment. Adjust if necessary.

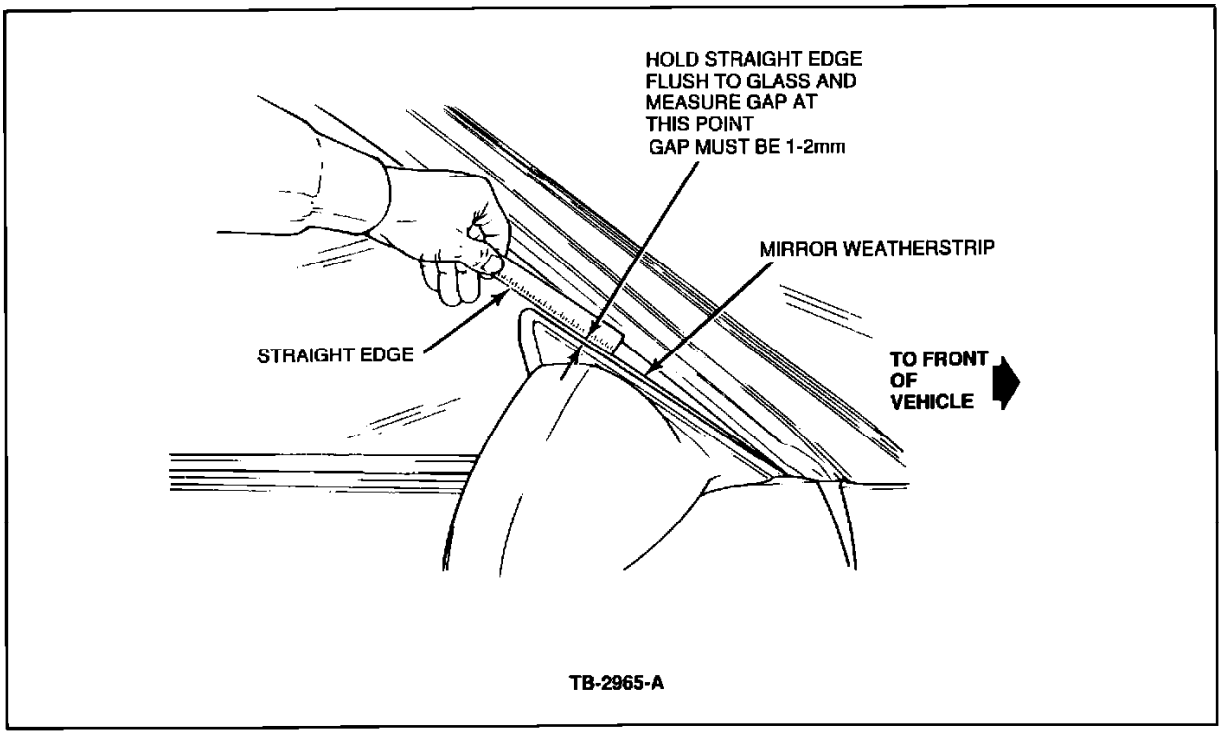

Figure 5

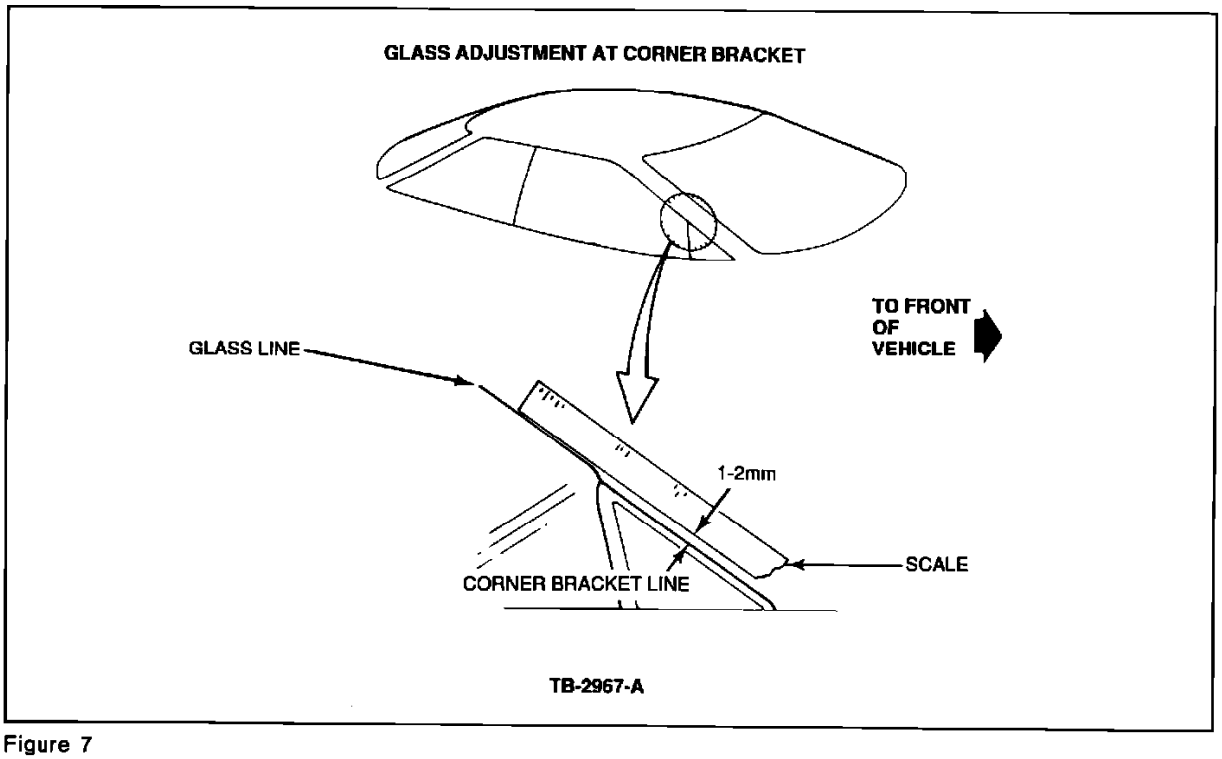

Figure 7

a. With the glass in the full up position, place a straight edge on the glass. See Figures 5 and 7.

b. Measure the gap between the straight edge and the top of the mirror weather strip. The gap must be 1-2 mm.

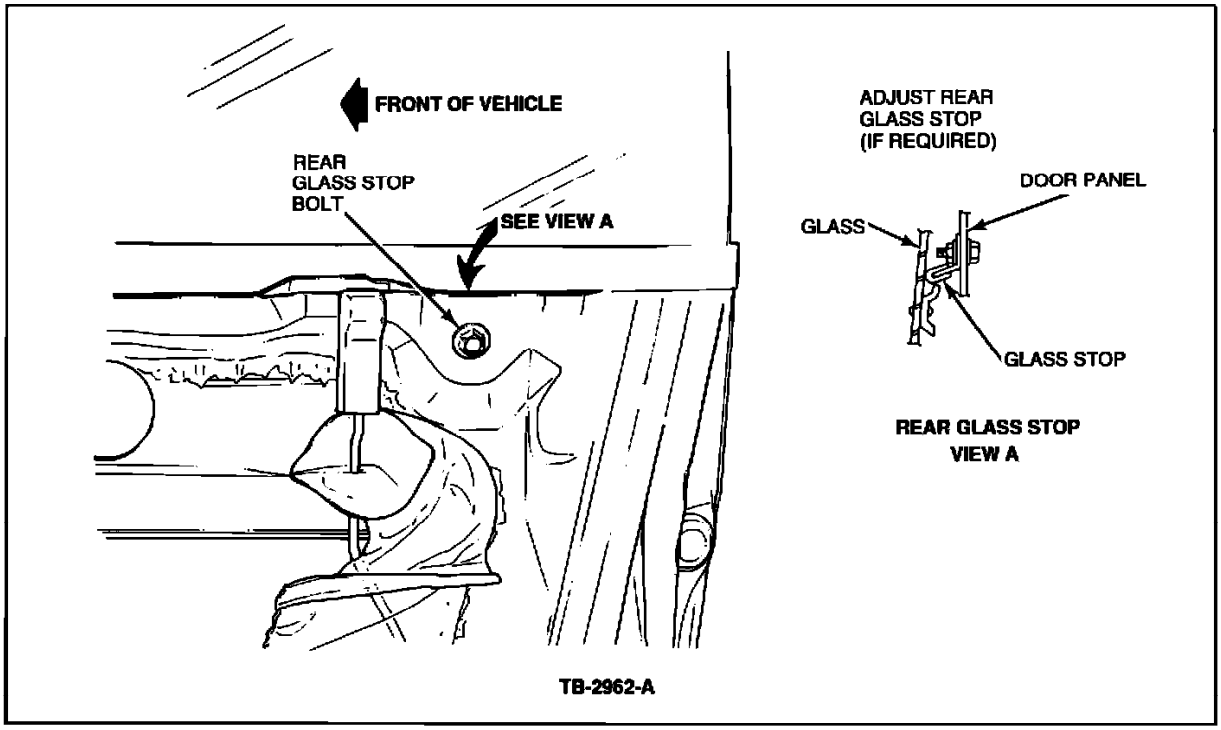

Figure 2

c. If adjustment is required, lower the window 1" (25.4 mm). Loosen the front glass stop bolt, Figure 2, and move the stop the distance required to obtain the 1-2 mm gap as shown in Figures 5 and 7.

d. Tighten the glass stop bolt.

e. Raise the window and recheck.

6. Check the drip edge moulding to door glass gap. Adjust if necessary.

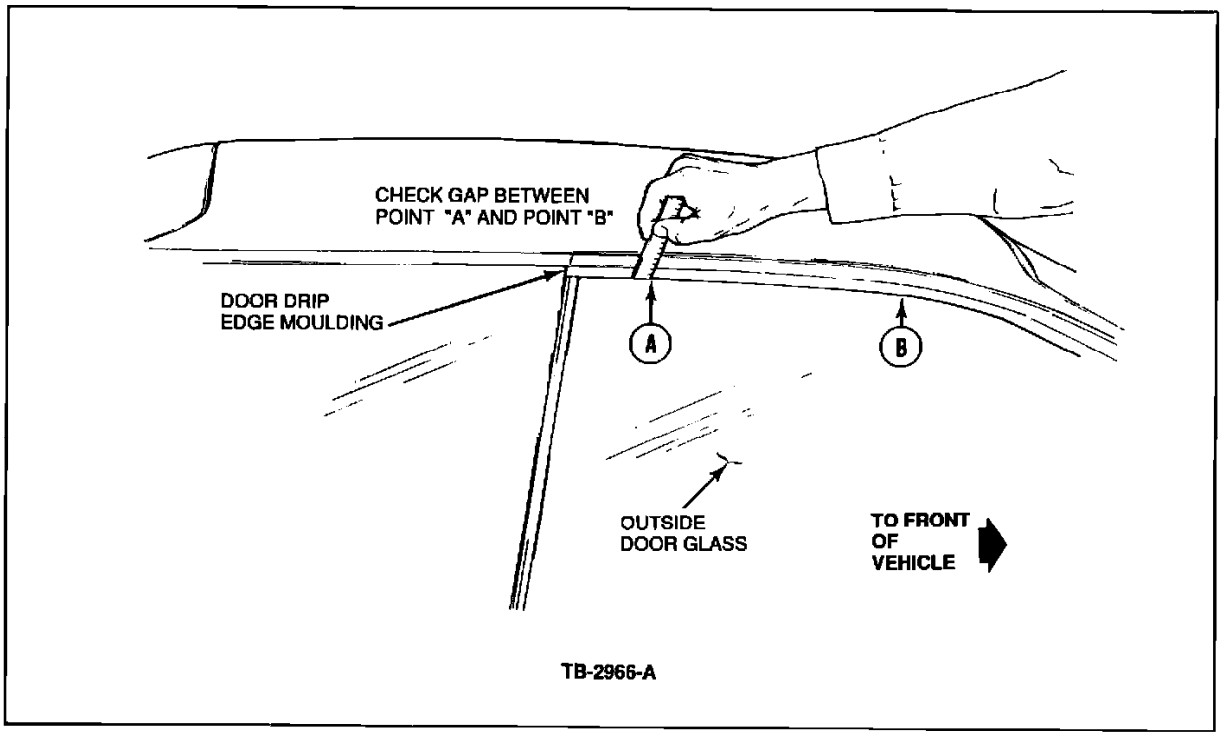

Figure 6

a. Measure the gap between the door drip edge moulding and the outside glass surface along the horizontal area of the top of the glass. See Figures 6 and 8 - points A through B. The correct gap is 3.5-4.0 mm.

b. Use your hands to adjust the drip edge moulding by applying pressure to bend the moulding to provide the required gap. Use caution to bend the drip edge moulding evenly to avoid a wavy appearance.

7. Check the "B" pillar weather strip channel. Adjust if necessary.

a. If a gap is still present at the midpoint on the glass near the "B" pillar weatherstrip, check the weather strip channel for damage.

b. Remove about 12" (305 mm) of the center of the "B" pillar weather strip next to the rear glass edge.

c. Bend the door weather strip channel toward the glass just enough to eliminate any gap between the glass and the weather strip.

d. Install the weather strip.

OTHER APPLICABLE ARTICLES: NONE

WARRANTY STATUS: INFORMATION ONLY

OASIS CODES: 102000, 110000, 190000, 701000

Technical Service Bulletin # **9454** Date: **940309**

Front Door Glass - Wind Noise/Water Leaks

Article No.
94-5-4

03/09/94

^ DOOR - FRONT - GLASS CLOSURE ON TOP OF DRIP RAIL

^ GLASS - FRONT DOOR - ADJUSTMENT PROCEDURE

^ LEAKS - WATER - FRONT DOOR GLASS

^ WINDNOISE - FRONT DOOR GLASS

FORD:
1993-94 PROBE

This TSB article is being republished in its entirety to expand on the front door glass adjustment procedure and to include a step for checking door glass pitch adjustment.

ISSUE:
The 1993/94 Probe Service Manuals do not provide a clear procedure for adjusting the front door glass for windnoise, water leaks, window stutter/jumping and door-closure-on-top-of-the-drip-rail concerns.

ACTION:
Use the following front door glass adjustment procedure and specifications to correct door glass windnoise, water leaks, window stutter/jumping and door glass-closure-on-top-of-the-drip-rail concerns.

SPECIFICATIONS

The specifications provided in this TSB article have ranges because individual vehicles may vary based on how the door fits on the car body. It may be necessary to change the door glass adjustments to the high or low end of the specifications to correct the concern on your vehicle.

FRONT DOOR GLASS ADJUSTMENT PROCEDURE

1. Check the door and striker for correct adjustment. Repair as necessary. Refer to the 1993 Probe Service Manual, Sections 01-03-5 and 01-14A, for service details.

2. Check the door glass for correct adjustment by using the following steps. Complete the steps in the order provided to obtain the best results.

NOTE:
IT IS NOT NECESSARY TO REMOVE THE WINDOW TO PERFORM ANY OF THE FOLLOWING ADJUSTMENTS. HOWEVER, IF FOR OTHER REASONS THE GLASS NEEDS TO BE REMOVED, DO NOT REMOVE THE WINDOW GUIDE BRACKETS FROM THE WINDOW. THESE ARE NOT ADJUSTABLE AND ARE VERY DIFFICULT TO REINSTALL PROPERLY.

DOOR PANEL REMOVAL AND INSTALLATION

3. Remove the door panel if adjustments need to be made. All door glass measurements can be made without removing the door panel.

DOOR TRIM PANEL REMOVAL

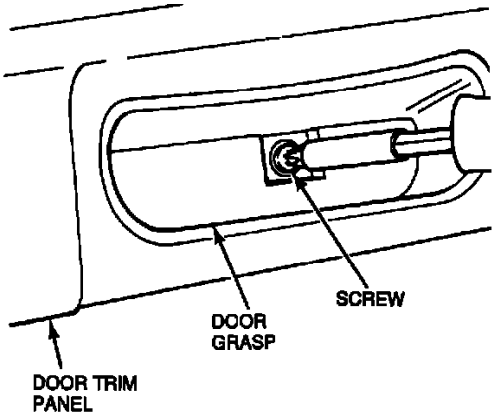

TB-3160-A

Figure 1

a. Remove the door grasp screw, Figure 1.

b. Remove the door grasp.

c. If equipped, remove the window regulator handle.

d. If equipped, gently pry up on the switch panel and remove it from the door trim panel.

e. If equipped, disconnect the switch panel electrical connectors.

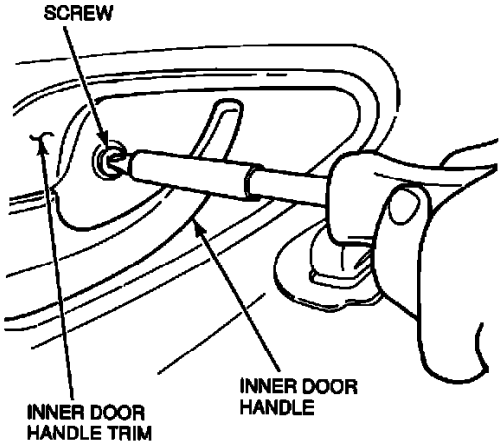

TB-3161-A

Figure 2

f. Remove the inner door handle trim screw, Figure 2.

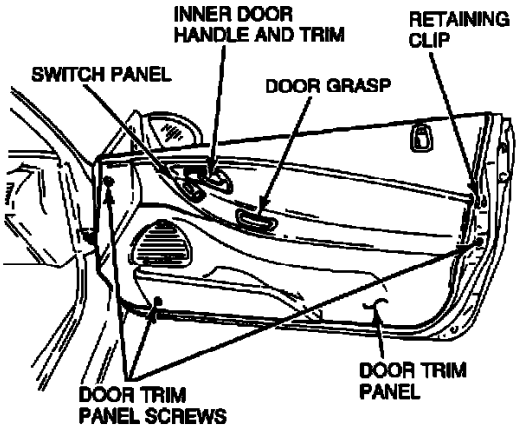

TB-3162-A

Figure 3

g. Remove the three (3) remaining door trim panel screws and one (1) retaining clip. See Figure 3.

h. Carefully pull the door trim panel away from the door to disengage the clips.

i. Guide the inner door handle trim through the door trim panel.

j. Remove the door trim panel.

INSTALLATION

To install, reverse the removal procedure. Replace any door clips that have been damaged. Refer to the parts listing for part number information.

NOTE:
THE FOLLOWING STEP SHOULD BE PERFORMED BEFORE ANY OTHER ADJUSTMENT.

4. Check door glass pitch adjustment:

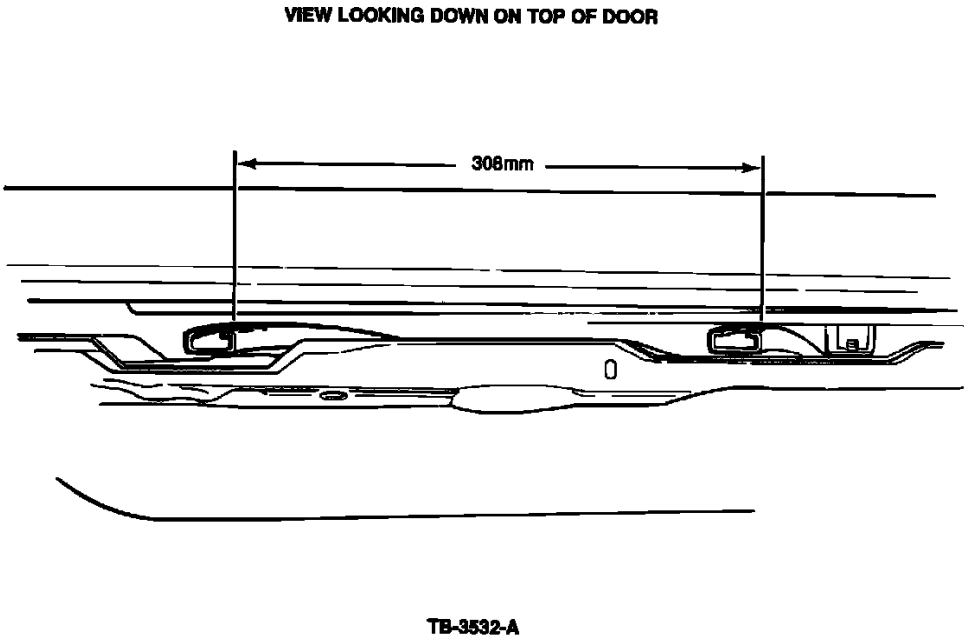

Figure 4

a. Measure from the front edge of the regulator channel to the front edge of the glass guide channel, Figure 4. The measurement should be 308 mm (11.82"). To correct, loosen the front glass guide and adjust.

b. Tighten the glass guide channel and recheck.

5. Check the door glass rear height adjustment. Adjust if necessary.

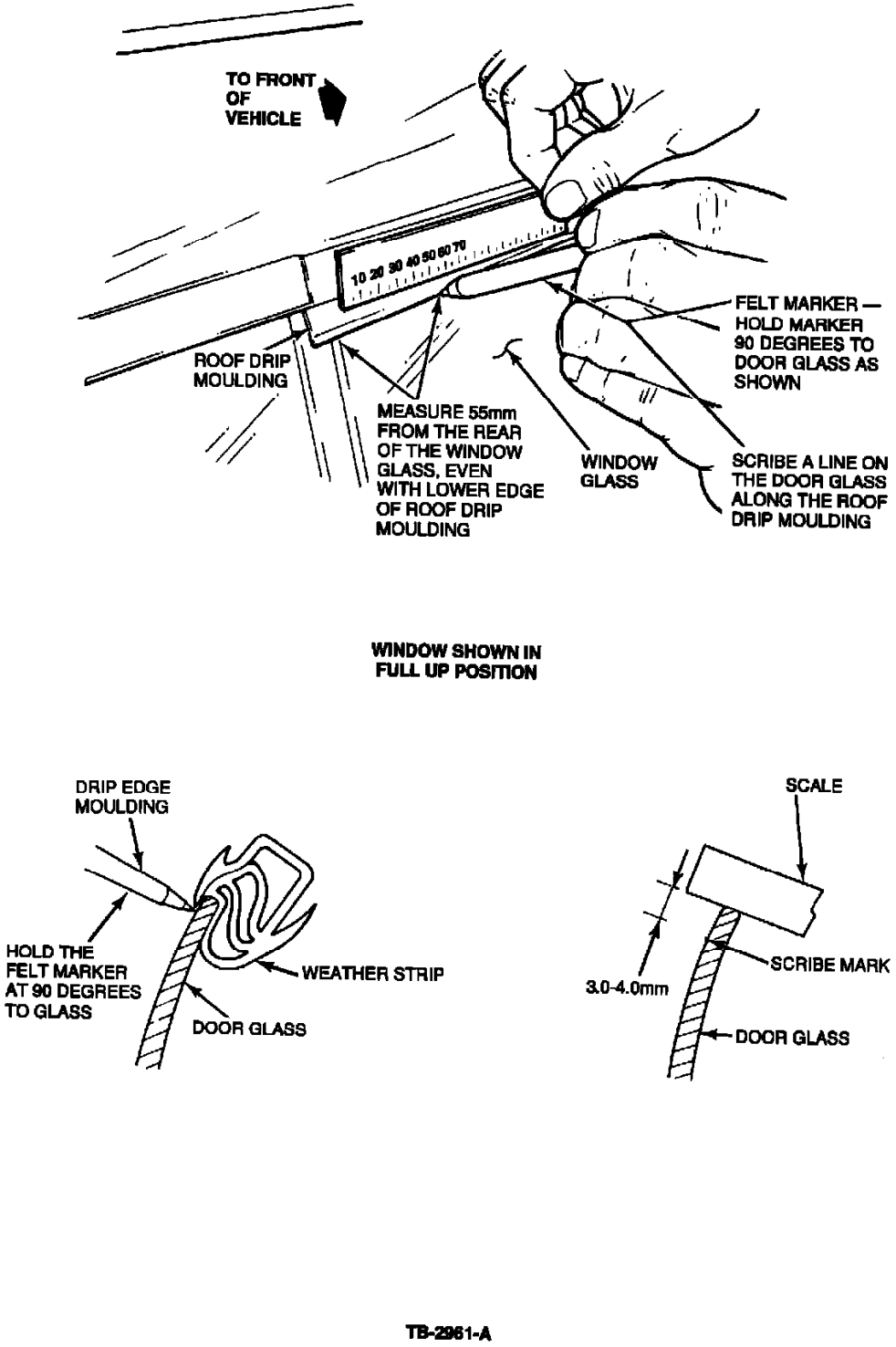

Figure 5

a. With the window in the full up position and the door closed, draw a line along the top of the glass with a felt marker. Locate the line 55 mm from the rear of the glass even with the lower edge of the roof drip moulding, Figure 5. The mark must be 3-4 mm from the top edge of the glass.

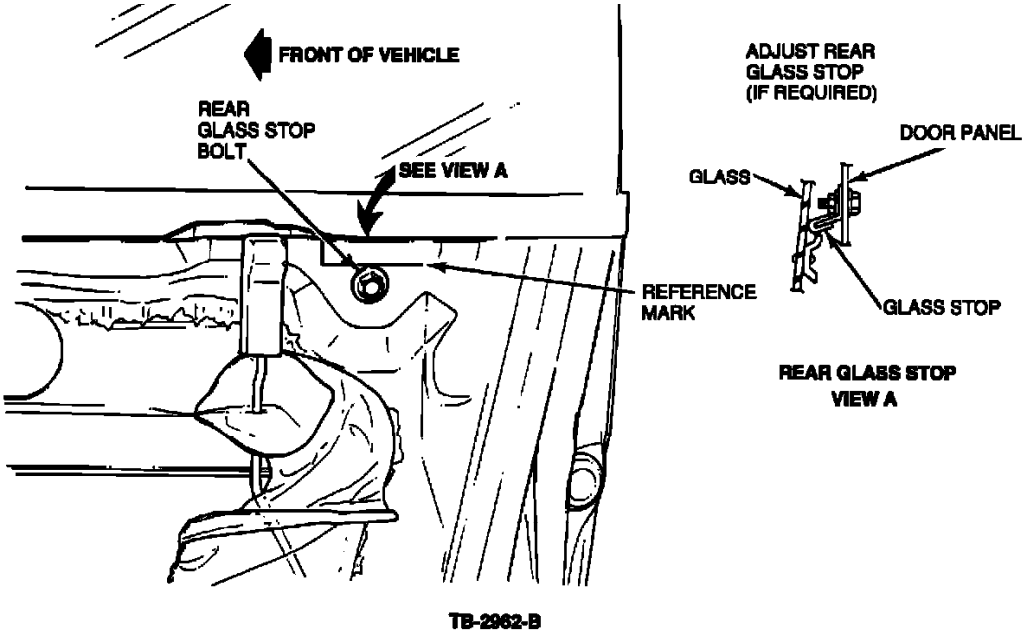

Figure 6

b. If adjustment is required, lower the window 1" (25.4 mm) and make a reference mark on the door. See Figure 6.

c. Loosen the glass stop bolt just enough to be able to slide the stop and move the stop the same distance the mark is out of specification. Example: If the glass is 1.0 mm too high, lower the stop 1.0 mm.

d. Tighten the glass stop bolt.

e. Raise the window and recheck.

6. Check the door glass rear inboard and outboard adjustment. Adjust if necessary.

NOTE:
DO NOT ADJUST THE FRONT WINDOW TRACK INBOARD AND OUTBOARD ADJUSTMENT SCREW.

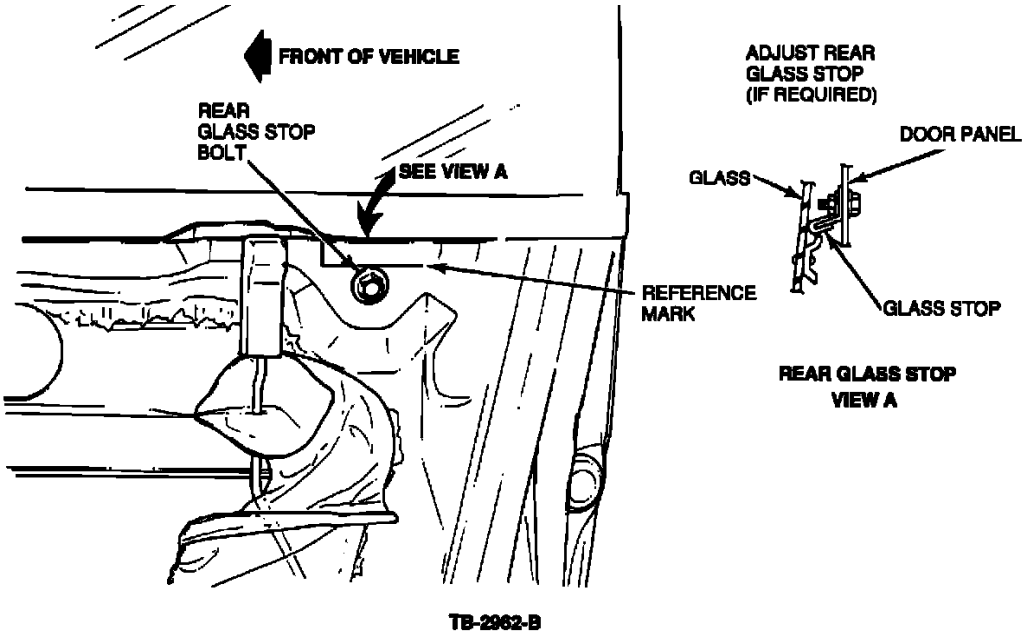

Figure 6

a. With the glass in the full up position, close the door until the top rear corner of the glass lightly touches the weatherstrip. See Figure 6.

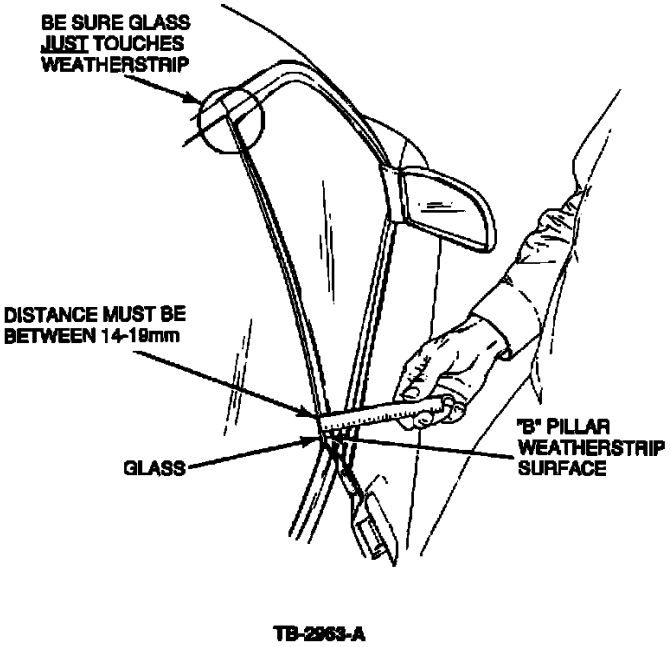

Figure 7

b. Measure the distance between the "B" pillar weatherstrip surface and the outside of the glass. See Figure 7. This distance must be between 14-19 mm.

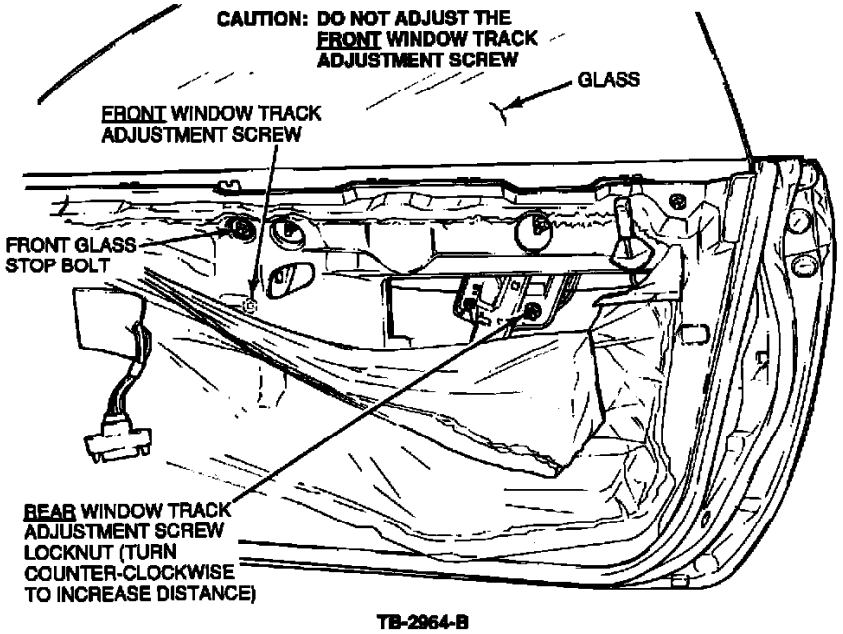

Figure 8

c. To adjust, loosen the adjustment screw locknut, Figure 8, and turn the adjustment screw counter-clockwise to increase the distance.

d. Tighten the adjustment screw locknut.

e. Recheck the distance between the "B" pillar weatherstrip surface and the outside of the glass.

7. Check the door glass front height adjustment. Adjust if necessary.

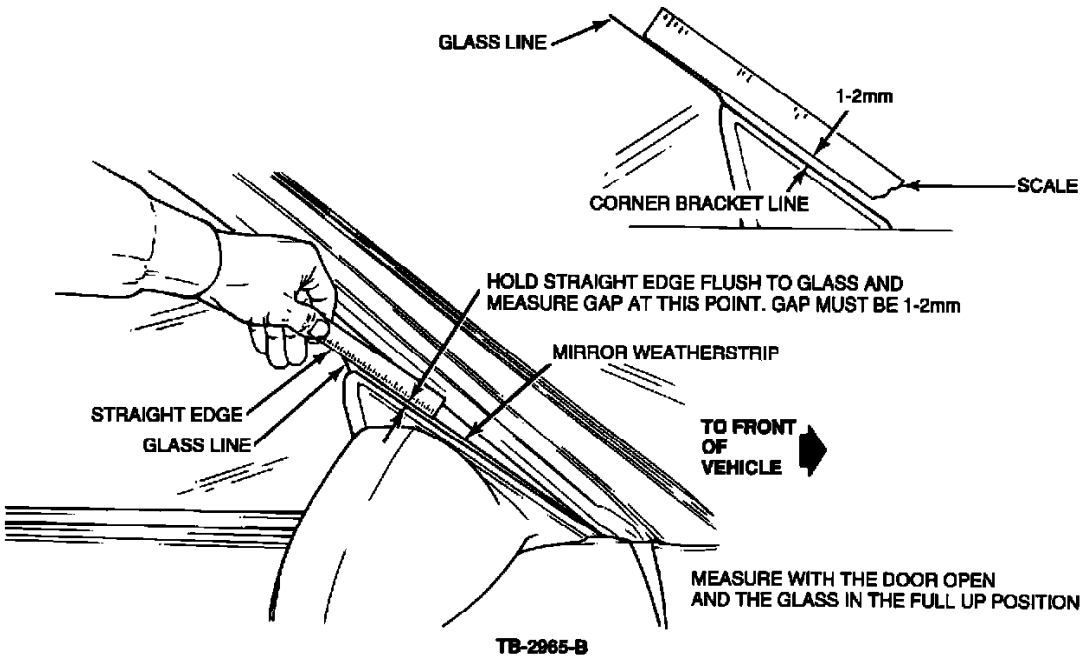

Figure 9

a. With the glass in the full up position, place a straight edge on the glass. See Figure 9.

b. Measure the gap between the straight edge and the top of the mirror weatherstrip. The gap must be 1-2 mm.

c. If adjustment is required, lower the window 1" (25.4 mm). Loosen the front glass stop bolt, Figure 8, and move the stop the distance required to obtain the 1-2 mm gap as shown in Figure 9.

d. Tighten the glass stop bolt.

e. Raise the window and recheck.

8. Check the drip edge moulding to door glass gap. Adjust if necessary.

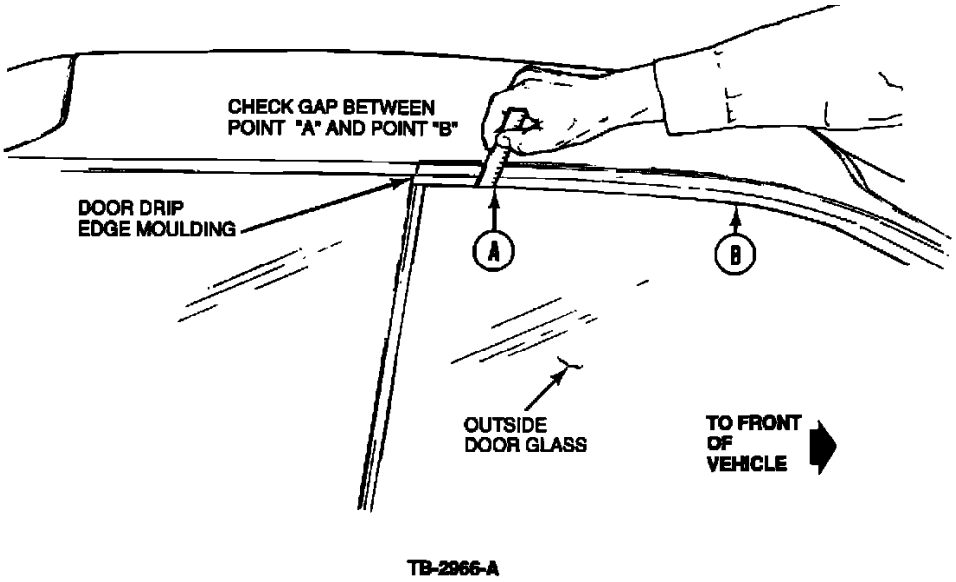

Figure 10

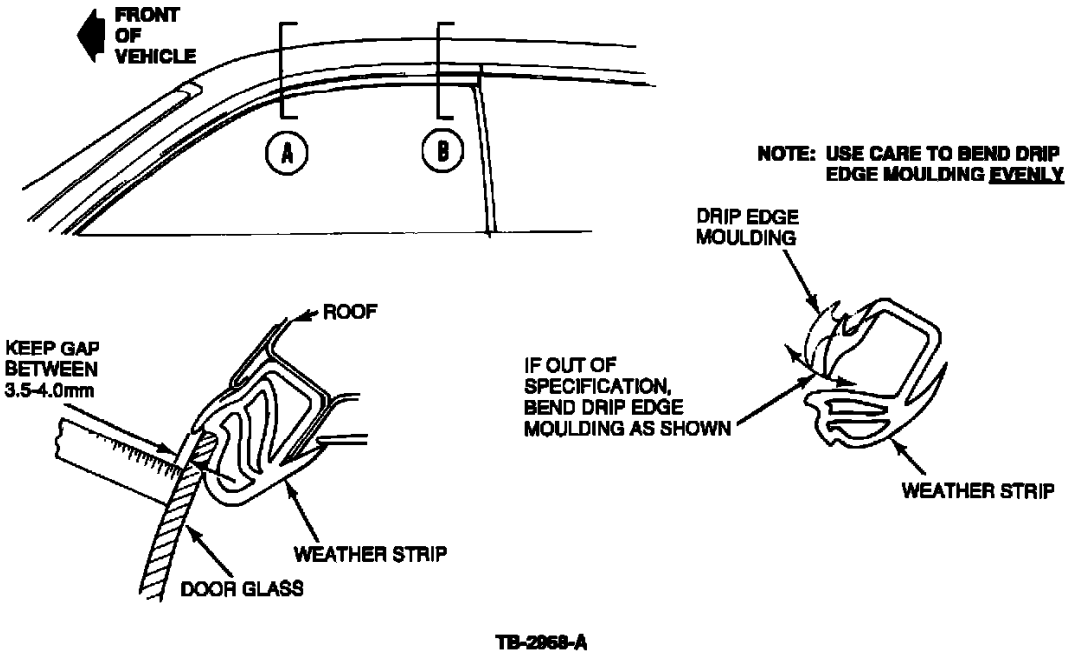

Figure 11

a. Measure the gap between the door drip edge moulding and the outside glass surface along the horizontal area of the top of the glass. See Figures 10 and 11 - points A through B. The correct gap is 3.5-4.0 mm.

b. Use your hands to adjust the drip edge moulding by applying pressure to bend the moulding to provide the required gap. Use caution to bend the drip edge moulding evenly to avoid a wavy appearance.

PART NUMBER	PART NAME	CLASS
GA2A-68AB1-A	Front Door Panel Fastener (3 Req.)	C
F1CZ-58239A42-A	Bottom/Rear Door Panel Fastener (4 Req.)	C

Parts Block

OTHER APPLICABLE ARTICLES: NONE
SUPERSEDES: 93-22-1
WARRANTY STATUS:
Eligible Under The Provisions Of Bumper To Bumper Warranty Coverage. Adjustments & Alignments Are Covered For 12 Months/12,000 Miles

OPERATION	DESCRIPTION	TIME
940504AT	Check And Adjust Door And Striker Only - Both Doors	0.4 Hr.
940504A	Check And Adjust Door And Striker Only - One Door	0.3 Hr.
940504BT	Check And Adjust Glass Only - Both Doors	0.9 Hr.
940504B	Check And Adjust Glass Only - One Door	0.5 Hr.
940504CT	Check And Adjust Door And Door Glass - Both Doors	1.1 Hr.
940504C	Check And Adjust Door And Door Glass - One Door	0.6 Hr.

DEALER CODING

BASIC PART NO.	CONDITION CODE
7021778	36

OASIS CODES: 102000, 110000, 190000, 701000

Technical Service Bulletin # **93211** Date: **931013**

Glass - Iridescence or Mottling In Tempered Glass

Article No.
93-21-1

1993 Ford Probe L4-121 2.0L DOHC VIN A MFI

10/13/93

GLASS - "IRIDESCENCE" OR "MOTTLING" IN TEMPERED GLASS

FORD:
1984-94 CROWN VICTORIA, ESCORT, MUSTANG, TEMPO, THUNDERBIRD
1986-88 EXP
1986-94 TAURUS
1989-93 FESTIVA

LINCOLN-MERCURY:
1984-86 CAPRI
1984-87 LYNX
1984-92 MARK VII
1984-94 COUGAR, GRAND MARQUIS, TOPAZ, TOWN CAR
1986-94 SABLE
1988-89 TRACER
1988-94 CONTINENTAL
1991-94 CAPRI, TRACER
1993-94 MARK VIII

LIGHT TRUCK:
1984-90 BRONCO II
1984-94 ECONOLINE, F-150-350 SERIES, RANGER
1986-94 AEROSTAR
1991-94 EXPLORER
1993-94 VILLAGER

ISSUE:
Vehicles may exhibit iridescent spots or "mottling" in tempered glass under some lighting conditions. This condition is caused by the tempering process.

ACTION:
Explain to customers that "iridescence" or "mottling" of tempered glass is a normal condition and that glass replacement is neither warranted nor necessarily effective in resolving the condition.

DESCRIPTION OF CONDITION

The somewhat iridescent grayish or blueish and fairly geometric spots detected in side and rear window tempered glass are characteristic of tempered glass.

The mottled appearance is noted only under certain conditions of lighting. The occurrence of mottling does not affect glass quality or durability and cannot be reduced by scouring the glass surface.

The boldness of the mottled pattern in a given glass may vary, depending upon lighting conditions, but may appear intensified if viewed through polarized sunglasses.

CAUSES OF CONDITION

Atmospheric dust and other angular reflections can cause changes in the polarized properties of natural light. This polarization, combined with the light polarizing properties imparted to tempered glass by the forces of tension and compression (during the tempering process), cause the iridescent or mottled appearance.

These are the same forces of compression and tension which make tempered glass so remarkably strong. Windshields, which are annealed rather than tempered, do not exhibit iridescence.

OTHER APPLICABLE ARTICLES: 83-16-4
WARRANTY STATUS: INFORMATION ONLY
OASIS CODES: 102000

Technical Service Bulletin # **97-19-1** Date: **970915**

Door Glass - Water Leaks/Wind Noise

Article No.
97-19-1

09/15/97

1993 Ford Probe L4-121 2.0L DOHC VIN A MFI

^ DOOR - FRONT - GLASS CLOSURE ON TOP OF DRIP RAIL

^ GLASS - FRONT DOOR - ADJUSTMENT PROCEDURE

^ LEAKS - WATER - FRONT DOOR GLASS

^ WINDNOISE - FRONT DOOR GLASS

FORD:
1993-97 PROBE

This TSB article is being republished in its entirety to expand on model year coverage and to include a step for checking weatherstrip deformation between A- and B-pillars.

ISSUE:
The 1993-97 Probe Service Manuals do not provide a clear procedure for adjusting the front door glass for windnoise, water leaks, window stutter/jumping and door-closure-on-top-of-the-drip-rail concerns.

ACTION:
Use the following front door glass adjustment procedure and specifications to correct door glass windnoise, water leaks, window stuffer/jumping and door glass-closure-on-top-of-the-drip-rail concerns.

PART NUMBER	PART NAME
GA2A-68AB1-A	Front Door Panel Fastener (3 Req'd.)
F1CZ-58239A42-A	Bottom/Rear Door Panel Fastener (4 Req'd.)

OTHER APPLICABLE ARTICLES: NONE

SUPERSEDES: 96-2-1

WARRANTY STATUS: Eligible Under The Bumper Warranty Coverage
Vehicles - Adjustments And Alignments Are Covered For 12 Months/12,000 Miles For 1993-94 Model Year Vehicles

OPERATION	DESCRIPTION	TIME
971901AT	Check And Adjust Door Striker Only - Both Doors	0.4 Hr.
971901A	Check And Adjust Door Striker Only - One Door	0.3 Hr.
971901BT	Check And Adjust Striker And Door Glass - Both Doors	1.1 Hr.
971901B	Check And Adjust Striker And Door Glass One Door	0.6 Hr.
971901CT	Check And Adjust Door Glass - Both Doors	0.9 Hr.
971901C	Check And Adjust Door Glass - One Door	0.5 Hr.
971901DT	Check And Reposition Weatherstrip - Both Doors	0.4 Hr.
971901D	Check And Reposition Weatherstrip - One Door	0.3 Hr.
971901ET	Check And Repair Weatherstrip Between A- And B-Pillars - Both Sides - Vehicles Built After 9/24/96	0.2 Hr.
971901E	Check And Repair Weatherstrip Between A- And B-Pillars - One Side -	0.1 Hr.

1993 Ford Probe L4-121 2.0L DOHC VIN A MFI

Vehicles Built After 9/24/96

DEALER CODING

BASIC PART NO.	CONDITION CODE
6621778	12

OASIS CODES: 102000, 110000, 190000, 701000, 702000, 702100, 702300

Specifications

The specifications provided in this TSB article have ranges because individual vehicles may vary based on how the door fits on the car body. It may be necessary to change the door glass adjustments to the high or low end of the specifications to correct the concern on your vehicle.

NOTE:

IT IS **IMPORTANT** THAT EACH STEP IN THIS TSB ARTICLE BE PERFORMED COMPLETELY AND IN PROPER SEQUENCE. PROPER DOOR GLASS ALIGNMENT IS CRITICAL TO ITS FIT AND FUNCTION.

Front Door Glass Adjustment Procedure

PROCEDURE

1. Check the door and striker for correct adjustment. Repair as necessary. Refer to the appropriate Probe Service Manual, Sections 01-03 and 01-14A, for service details.

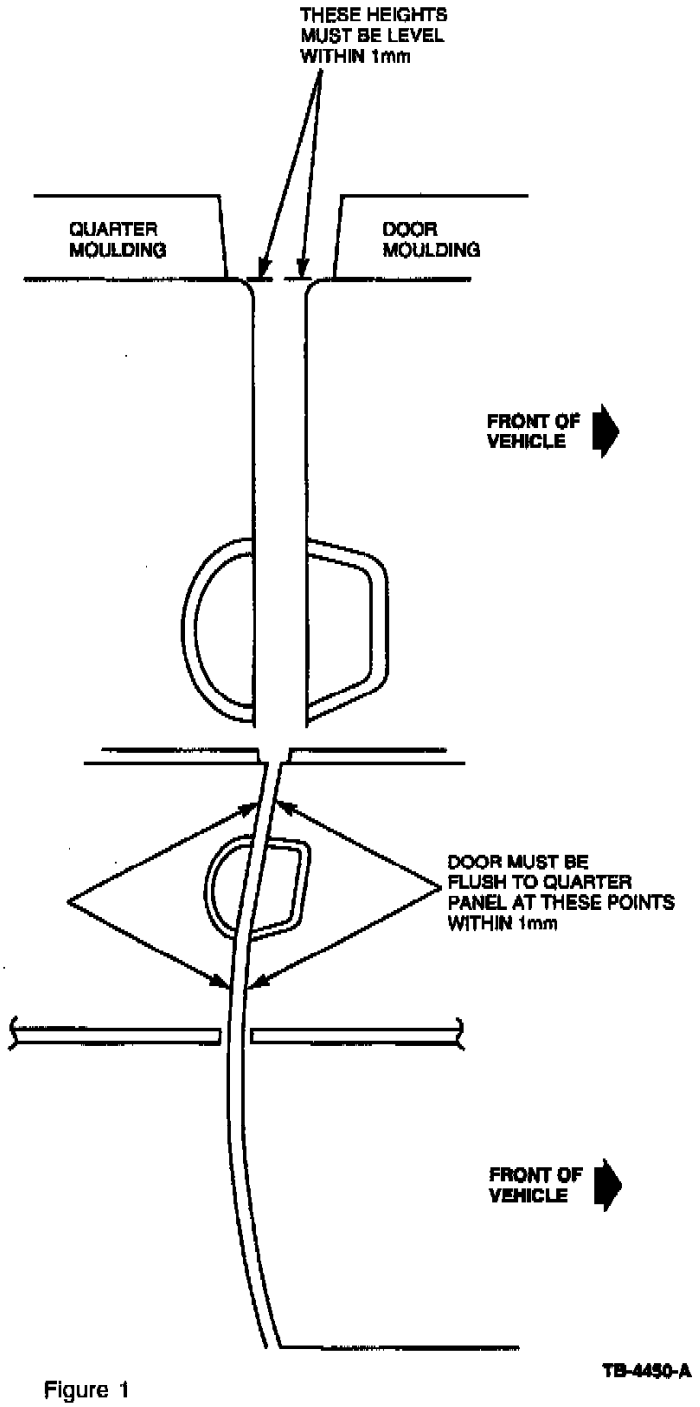

Figure 1

NOTE:

DOOR HEIGHT MUST BE LEVEL WITH QUARTER PANEL AT TOP OF THE DOOR WITHIN 1 mm. DOOR MUST ALSO BE FLUSH WITH QUARTER PANEL WITHIN 1 mm AT POINTS ABOVE DOOR HANDLE AND AT THE MIDDLE OF THE DOOR (FIGURE 1).

Door Panel Removal and Installation

All door glass measurements can be made without removing the door panel. Remove the door panel if adjustments need to be made.

NOTE:

IT IS NOT NECESSARY TO REMOVE THE DOOR GLASS TO PERFORM ANY OF THE FOLLOWING ADJUSTMENTS. HOWEVER, IF FOR OTHER REASONS THE DOOR GLASS NEEDS TO BE REMOVED, DO NOT REMOVE THE DOOR GLASS GUIDE BRACKETS FROM THE GLASS. THESE ARE NOT ADJUSTABLE AND ARE VERY DIFFICULT TO REINSTALL PROPERLY.

Door Trim Panel Removal

2. DOOR TRIM PANEL REMOVAL

   a. Remove side view mirror inside cover.

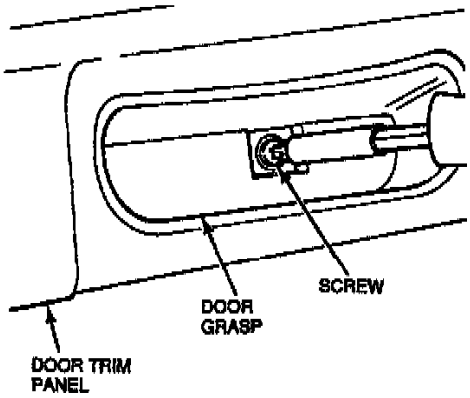

Figure 2 TB-3160-A

b. Remove the door grasp screw (Figure 2) - 1993-94 model years only.

c. Remove the door grasp - 1993-94 model years only.

d. If equipped, remove the window regulator handle.

e. If equipped, disconnect the switch panel electrical connectors.

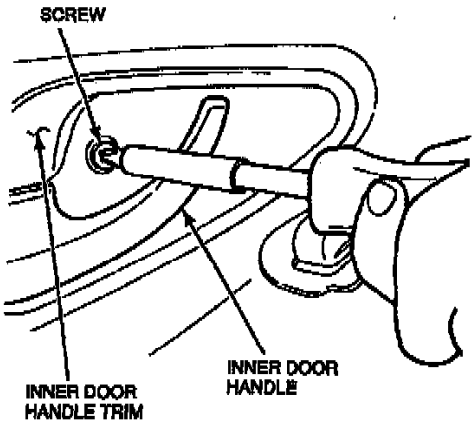

Figure 3 TB-3161-A

f. Remove the inner door handle trim screw (Figure 3) - 1993-94 model years only.

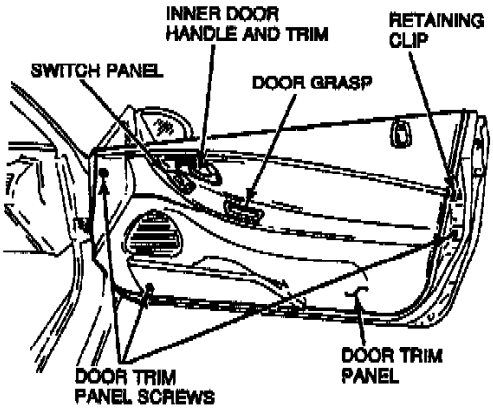

Figure 4 TB-3162-A

g. Remove the three (3) remaining door trim panel screws and one (1) retaining clip (Figure 4) - 1993-94 model years only.

h. Carefully pull the door trim panel away from the door to disengage the clips.

i. Guide the inner door handle trim through the door trim panel.

j. Remove the door trim panel.

Door Trim Panel Installation

To install, reverse the removal procedure. The door clips must be replaced to prevent door panel squeaks and rattles. Refer to the parts listing for

part number information.

NOTE:
THE FOLLOWING STEPS MUST BE PERFORMED IN THE LISTED SEQUENCE.

3. Check door glass pitch adjustment:

   a. Check the clearance between the quarter glass and door glass along the B-pillar. The correct gap should be 9-13 mm (0.35-0.51").

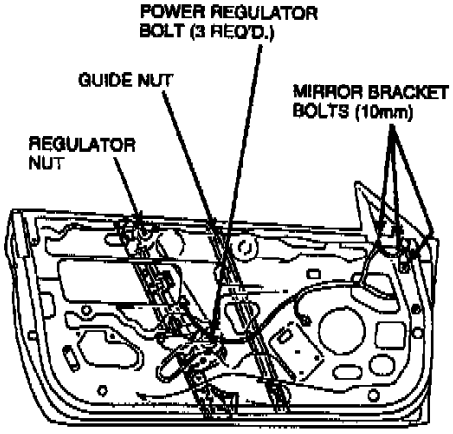

Figure 5 TB-4451-A

   b. If adjustment is required, mark and loosen the top regulator and guide 12 mm nuts (for power windows loosen the three (3) power regulator 10 mm bolts), and reposition the door glass (Figure 5).

   c. Torque the regulator nut to 19-25 N.m (14-18 lb-ft) and, if equipped, the three (3) power regulator bolts to 7-9 N.m (62-80 lb-in).

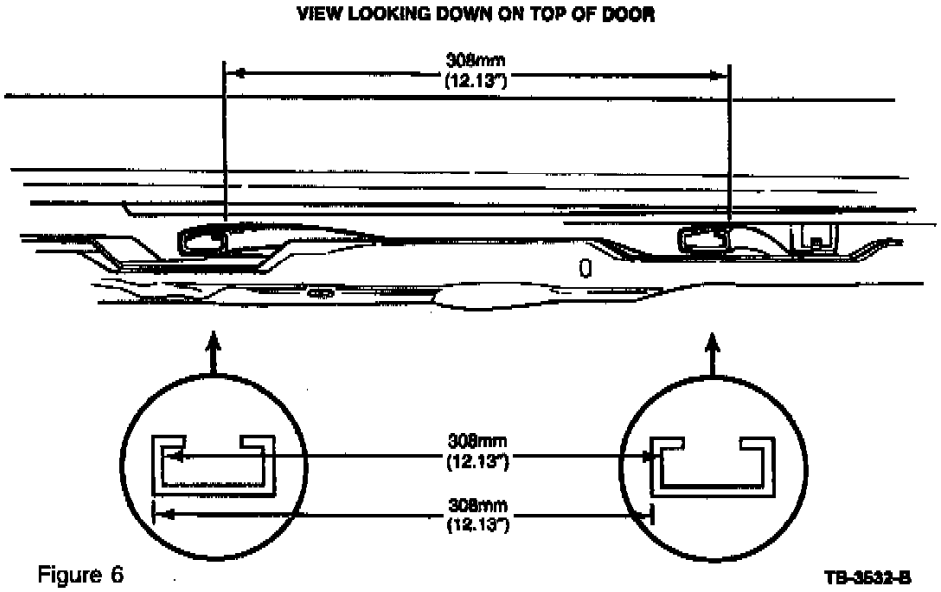

Figure 6 TB-3532-B

   d. Check the door glass pitch adjustment by measuring from the front edge of the regulator channel to the front edge of the glass guide channel (Figure 6). The measurement should be 308 mm (12.13"). To correct, loosen the front glass guide and adjust.

   e. Tighten the glass guide channel and recheck measurement.

   f. Check lower regulator and guide 12 mm nuts for proper torque - 19-25 N.m (14-18 lb-ft).

   g. Recheck the quarter glass-to-door glass gap.

4. Check the door glass rear height adjustment. Adjust if necessary.

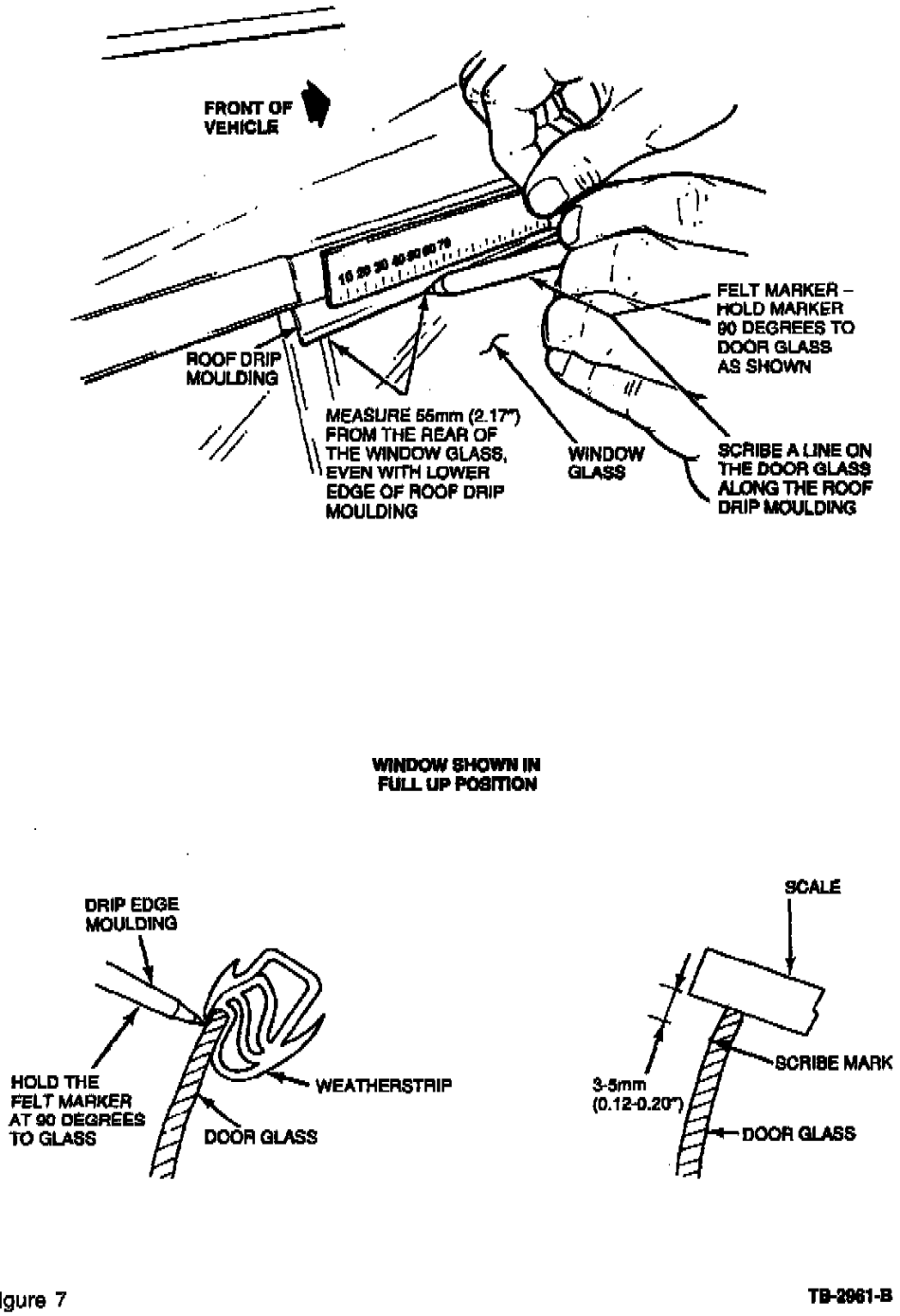

Figure 7 TB-2961-B

a. With the door glass in the full up position and the door closed, draw a line along the top of the glass with a felt marker. Locate the line 55 mm (2.17" from the rear of the glass even with the lower edge of the roof drip moulding (Figure 7). The mark must be 3-5 mm (0.12-0.20") from the top edge of the glass.

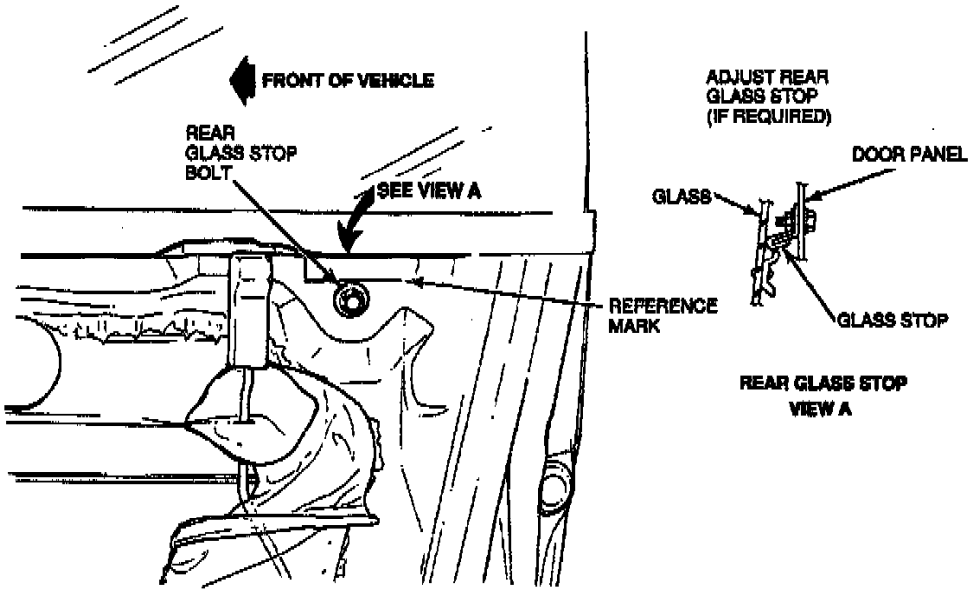

Figure 8 TB-2962-B

b. If adjustment is required, lower the door glass 25.4 mm (1") and make a reference mark on the door (Figure 8).

c. Loosen the glass stop bolt just enough to be able to slide the stop and move the stop the same distance the mark is out of specification. Example: If the glass is 1.0 mm too high, lower the stop 1.0 mm.

NOTE:
STOPPER MAY ROTATE DURING TIGHTENING WHICH CAN CHANGE THE GLASS HEIGHT.

d. Tighten the glass stop bolt.

e. Raise the door glass and recheck.

5. Check the door glass rear inboard and outboard adjustment. Adjust if necessary.

NOTE:
DO NOT ADJUST THE FRONT WINDOW TRACK INBOARD AND OUTBOARD ADJUSTMENT SCREW.

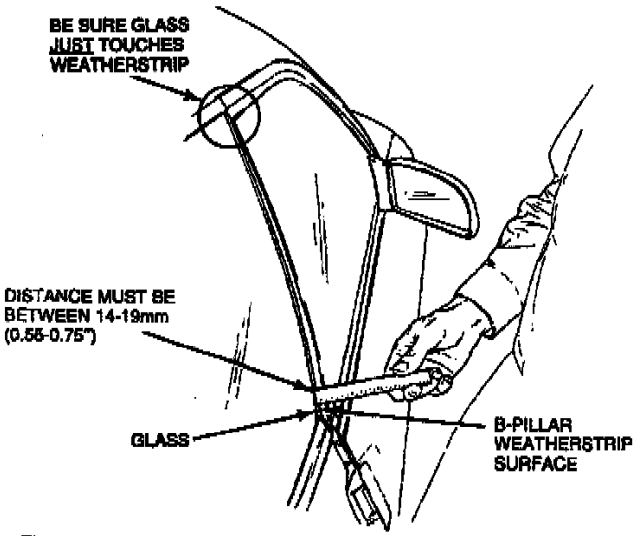

Figure 9 TB-2963-B

a. With the door glass in the full up position, close the door until the top rear corner of the glass lightly touches the weatherstrip (Figure 9).

b. Measure the distance between the B-pillar weatherstrip surface and the outside of the glass (Figure 9). This distance must be between 14-19 mm (0.55-0.75").

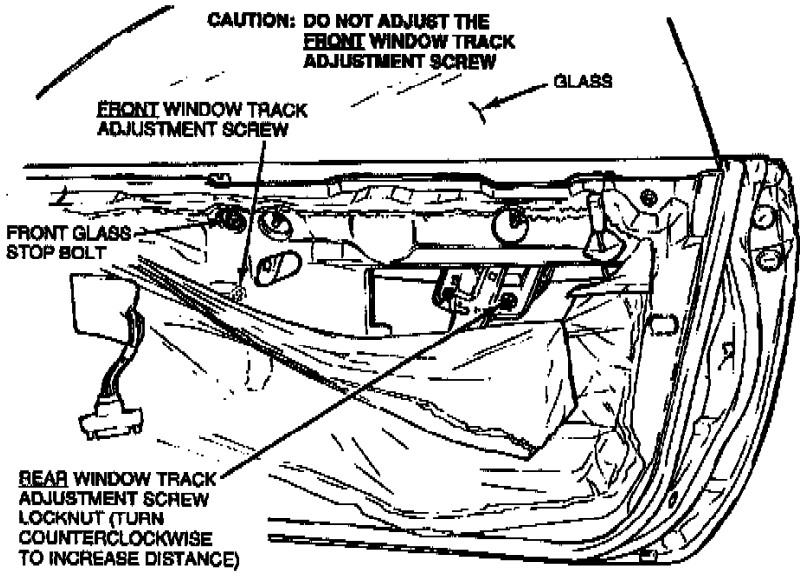

Figure 10 TB-2964-C

c. To adjust, loosen the adjustment screw locknut (Figure 10) and turn the adjustment screw counterclockwise to increase the distance.

d. Tighten the adjustment screw locknut.

e. Recheck the distance between the B-pillar weatherstrip surface and the outside of the glass.

6. Check the door glass front height adjustment. Adjust if necessary.

a. With the door closed, check to see if the top edge of the mirror bracket is under the weatherstrip lip.

b. If adjustment is required, loosen the three (3) 10mm mirror bracket bolts (Figure 5), and move the mirror bracket rearward and down as necessary.

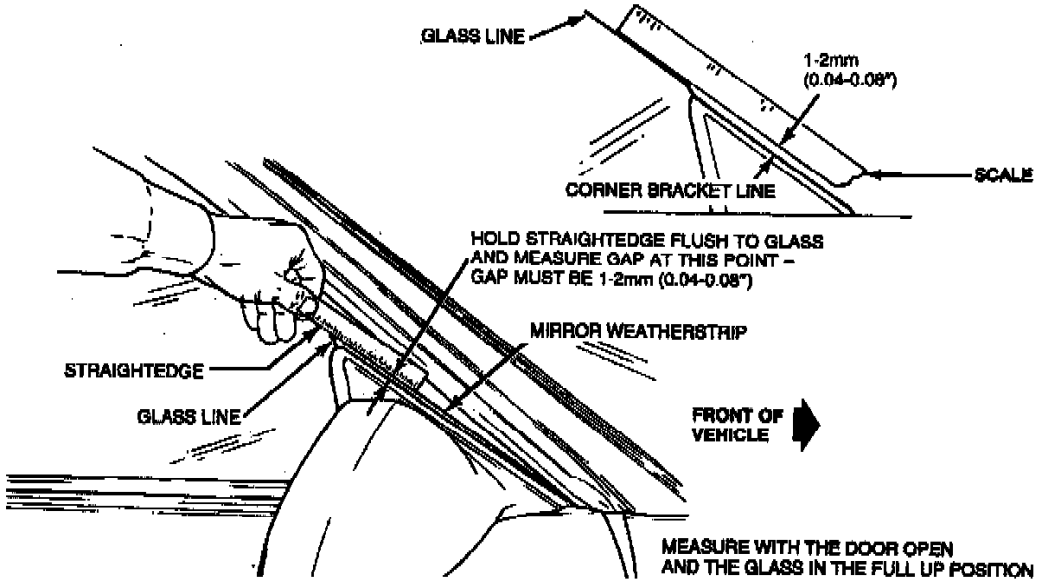

Figure 11 TB-2965-C

c. With the glass in the full up position, place a straightedge on the glass (Figure 11).

d. Measure the gap between the straightedge and the top of the mirror weatherstrip. The gap must be 1-2 mm (0.04-0.08").

e. If adjustment is required, lower the window 25.4 mm (1"). Loosen the front glass stop bolt (Figure 10) and move the stop the distance required to obtain the 1-2 mm gap (0.04-0.08") (Figure 11).

f. Tighten the glass stop bolt.

g. Raise the window and recheck.

7. Check the drip edge moulding-to-door glass gap. Adjust if necessary (1993 model year only).

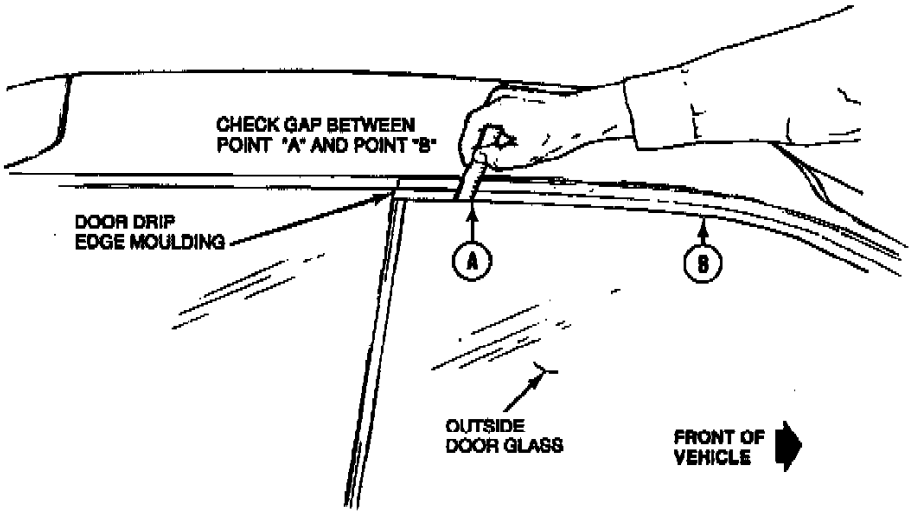

Figure 12

TB-2966-B

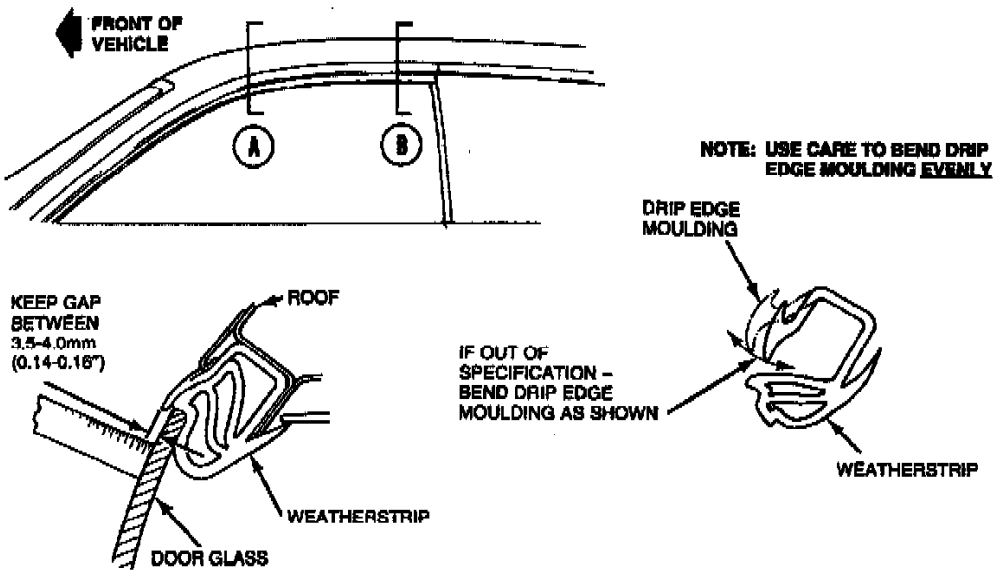

Figure 13

TB-2969-B

a. Measure the gap between the door drip edge moulding and the outside glass surface along the horizontal area of the top of the glass (Figures 12 and 13 - points A through B). The correct gap is 3.5-4.0 mm (0.14-0.16").

b. Use your hands to adjust the drip edge moulding by applying pressure to bend the moulding to provide the required gap. Use caution to bend the drip edge moulding evenly to avoid a wavy appearance.

8. Check weatherstrip for deformation at top corner of B-pillar. If the weatherstrip is dimpled inward, perform the following steps:

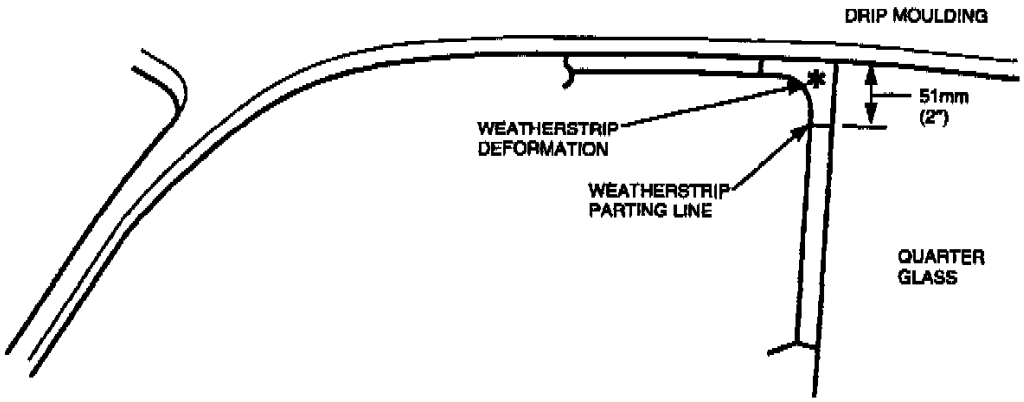

Figure 14

TB-4452-A

a. At top of B-pillar, measure from the bottom edge of drip moulding down 51 mm (2"). Mark the quarter glass (Figure 14).

b. Remove the top half of the weatherstrip from the B-pillar.

c. Remove the top weatherstrip retaining pin from the weatherstrip and discard the pin.

d. Seal the top weatherstrip retaining pin hole in the B-pillar.

e. Grab the weatherstrip in front of the corner and pull the weatherstrip rearward around the radius and down the B-pillar until the parting line on the weatherstrip lines up with the 51mm (2") mark on the quarter glass.

f. Reseat the remaining portion of the weatherstrip into the B-pillar. Evenly distribute the weatherstrip slack down the entire length of the B-pillar.

NOTE:
FOR VEHICLES BUILT AFTER 9/24/96, PERFORM STEP 9.

9. Check weatherstrip for deformation between A- and B-pillars. If weatherstrip is dimpled inward, perform the following Steps 9a-9c:

a. Pull outer edge of weatherstrip between the A- and B-pillars forward until screw heads that attach the weatherstrip to the body are visible.

b. Attach a piece of self-adhesive back foam approximately 400 mm long by 15 mm high by 3 mm thick to the backside of the weatherstrip where the dimple has occurred.

c. Tuck the weatherstrip back into place and check that the dimple has disappeared. If dimple is still present repeat Steps 9a and 9b and add additional foam until the dimple has completely disappeared.

10. Road test vehicle at highway speeds and perform Steps 9a and 9b to verify repair.

a. Turn blower motor on at various speeds and listen for air leaks.

b. Cycle door glass down and up to verify that the door glass reseals.

Technical Service Bulletin # **94172** Date: **940824**

Rear View Mirror - Detaches From Windshield

Article No.
94-17-2

08/24/94

REAR VIEW MIRROR - DETACHES FROM WINDSHIELD - SERVICE TIP

FORD:
1990-94 TEMPO
1990-95 CROWN VICTORIA, ESCORT, MUSTANG, TAURUS, THUNDERBIRD
1992-95 PROBE 1995 CONTOUR

LINCOLN-MERCURY:
1990-92 MARK VII
1990-94 TOPAZ
1990-95 CONTINENTAL, COUGAR, GRAND MARQUIS, SABLE, TOWN CAR
1991-95 TRACER
1993-95 MARK VIII
1995 MYSTIQUE

LIGHT TRUCK:
1990-95 AEROSTAR, BRONCO, ECONOLINE, EXPLORER, F-150-350 SERIES, RANGER
1993-95 VILLAGER
1995 WINDSTAR

ISSUE:
The rear view mirror assembly may detach from the windshield. This may be caused by:

^ High humidity conditions, which may cause the production adhesive to fail

^ Improper cleaning of the glass and the mirror button during repair process may cause the Rear View Mirror Adhesive service chemical to fail, resulting in repeat repairs

^ Use of expired or improperly stored service kits

^ Improper use of service kit.

ACTION:
Review the service kit expiration date, and use the revised cleaning and application procedures. Refer to the following procedures for service.

WARNING:
USE WITH ADEQUATE VENTILATION. AVOID EYE CONTACT AND CONTACT WITH SKIN.

SERVICE KIT STORAGE AND EXPIRATION PROCEDURES

1. Avoid prolonged storage of Rear View Mirror Adhesive kits. Over time, the adhesive performance will degrade. Excessive storage temperatures and exposure to sunlight will also degrade the unused material. For these reasons, Ford recommends:

   ^ Rotating stock, using the oldest material first

   ^ Storing the adhesive kits in a cool, dry, dark place

   ^ Avoiding placement of display racks in direct sunlight

   ^ Using only repair kits that are less than one (1) year old.

HOW TO READ FORD REAR VIEW MIRROR ADHESIVE (D9AZ-19554-CA) DATE CODES

EXAMPLE: 3CA262

YEAR OF MANUFACTURE:	FIRST CHARACTER (3) IS LAST DIGIT OF YEAR, I.E., 1993
MONTH OF MANUFACTURE:	SECOND CHARACTER (C) CODES MONTH OF YEAR (MARCH). SEE CHART BELOW FOR INTERPRETATION.

LAST FOUR CHARACTERS (A262) SIGNIFY BATCH NUMBER AND PACKAGING LOCATION.

THE ADHESIVE WAS MANUFACTURED IN MARCH, 1993.

MONTHLY CODE GUIDE

A - JANUARY	E - MAY	I - SEPTEMBER
B - FEBRUARY	F - JUNE	J - OCTOBER
C - MARCH	G - JULY	K - NOVEMBER
D - APRIL	H - AUGUST	L - DECEMBER

TB-3844-A

Figure 1

2. You can determine the age of the material in the kit by checking the date code crimped in the plastic seal at the bottom of the adhesive squeeze tube. The date code format is shown in Figure 1.

   ^ The first character is a digit representing the last digit of the year the material was manufactured.

   ^ The second character is a letter representing the month of manufacture.

   ^ The remaining characters indicate the location where the material was produced.

LOCATION OF "USE BY" DATES

REAR VIEW MIRROR ADHESIVE

A HIGH STRENGTH ADHESIVE FOR MIRROR BRACKET BONDING

DIRECTIONS FOR APPLICATION

1. Make sure glass,bracket and adhesive kit are at least at room temperature (65–75°F, 18.3–23.9°C).
2. Mark original location of bracket on outside of windshield using a wax pencil.
3. Thoroughly clean bonding surfaces of glass and bracket to remove old adhesive. Use mild abrasive cleanser on glass and fine sandpaper on bracket to lightly roughen surface. Wipe clean with alcohol moistened cloth.
4. Crush accelerator vial and apply accelerator to bonding surface of bracket and windshield. Let dry for 3 minutes.
5. Apply a small amount of adhesive to bracket. Spread adhesive evenly over entire bonding surface.
6. Position the bracket in its proper location on the windshield and press firmly for 1 minute.
7. Allow 5 minutes for adhesive to cure and install rear view mirror to bracket.

WARNING

VAPOR HARMFUL. EYE IRRITANT AND MAY IRRITATE SKIN.

Adhesive contains Acrylic Acid and Methacrylic Ester. Accelerator contains Trichloroethylene. Use with adequate ventilation. Avoid breathing vapor. Avoid eye contact and contact with skin. In case of eye contact, flush eyes with water for 15 minutes and get medical attention. In case of skin contact, wash with soap and water. Do not expose to heat or store above 120°F (49°C).

KEEP BOTH PRODUCTS OUT OF REACH OF CHILDREN

D9AZ-19554-CA

DISTRIBUTED BY:
FORD MOTOR COMPANY, DEARBORN, MICHIGAN 48121
PRINTED IN USA. SS/658 L1509A REV. 5-86
CPR © FORD MOTOR COMPANY, 1986

BLISTER CARD

USE BY
3/15/94

0 84422 09796 1

TC-486

ONE PACKAGE OF 10 PCS

D9AZ-19554-CA

REARVIEW MIRROR ADHESIVE

SHIPPING BOX

USE BY 031594

DO NOT HEAT OR STORE AT TEMPERATURE ABOVE 120°F (49°C)

TB-3645-A

Figure 2

This date represents the date the material was manufactured. Ford recommends that material older than one year old not be used to install interior rear view mirror assemblies. To enable dealership personnel to more easily determine the suitability of the material, the individual kits and the shipping box will be stamped with a "Use By" date. The new "Use By" label will be on all products made after June, 1994. Figure 2 shows the location of the "Use By" date on the back of each individual blister card and the shipping box.

SERVICE PROCEDURES

NOTE:

THE FOLLOWING PROCEDURES SUPERSEDE THE INSTRUCTIONS ON THE BACK OF THE ORIGINAL REAR VIEW MIRROR ADHESIVE PACKAGE.

NOTE:

THE MIRROR BUTTON IS OFTEN CALLED A BRACKET, AND THE WINDSHIELD IS SOMETIMES REFERRED TO AS GLASS.

1. Make sure glass, bracket, and rear view mirror adhesive are at room temperature (65-75~F, 18-24~C).

^ If possible, the repair should be performed indoors. Do not perform the repair in direct sunlight.

^ If you must work outside, park the vehicle in a shaded area out of the direct sunlight.

^ The adhesive will not bond at temperatures less than 45~F (7~C), and will bond too quickly in direct sunlight.

2. Mark original location of bracket on outside of windshield with any appropriate marking tool (e.g., crayon, magic marker) before you begin.

NOTE:
SURFACES MUST BE CLEAN FOR PROPER BONDING TO OCCUR.

3. Use the following steps to ensure proper cleaning of glass and button:

   a. Carefully remove thick layers of the old adhesive from the glass and the mirror button using a single edge razor blade.

   b. Using a clean cloth saturated with isopropyl alcohol (obtain 70% isopropyl rubbing alcohol locally), rub the glass and the mirror button to remove any remaining old adhesive. Soaking the mirror button in isopropyl alcohol may speed the adhesive removal process.

   c. Rub the mirror button and the glass with a non-abrasive bathroom cleanser (obtain locally) to ensure all traces of the old adhesive have been removed.

NOTE:
IT IS ESSENTIAL THAT NO TRACES OF CLEANSER OR ADHESIVE REMAIN ON THE GLASS OR THE MIRROR BUTTON.

   d. Wipe the glass and the mirror button with a new, clean cloth saturated with isopropyl alcohol (or rubbing alcohol).

4. The accelerator vial contains a priming agent which speeds the adhesive curing process.

   a. Grasp the paper wrapper around the vial and squeeze until the vial inside the paper wrapper breaks, releasing the accelerator to the felt tip on the end of the cylinder.

   b. Cover the entire bonding area by applying a barely visible, but uniform, film of accelerator to an area larger than the mirror button "footprint" on the glass and to the entire mirror button bonding surface.

   c. Let the accelerator dry for 3 minutes.

NOTE:
DO NOT TOUCH THE PRIMED SURFACES.

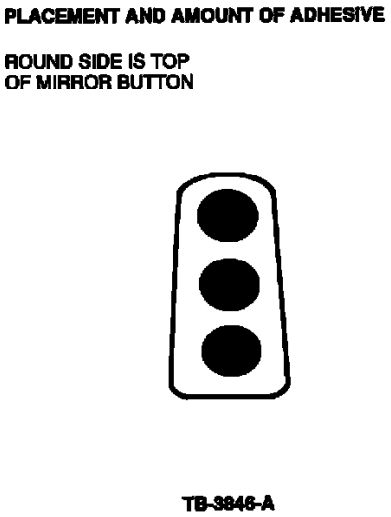

Figure 3

5. Squeeze only three (3) drops of adhesive in a line from top to bottom on the mirror button (Figure 3). It is not necessary to spread the adhesive.

NOTE:
MAKE SURE THE BUTTON IS POSITIONED PROPERLY FOR STEP 6. REPOSITIONING THE BUTTON, ONCE IN CONTACT WITH GLASS, WILL CAUSE THE ADHESIVE TO FAIL.

6. Position the mirror button in its proper location on the windshield (the rounded edge is pointing up). Press firmly for one full minute to ensure complete bonding. If mirror button is not firmly attached after more than one minute, remove button and repeat Steps 2 through 5.

7. Allow 5 minutes for adhesive to cure (with temperatures above 65~F, 18~C) and install rear view mirror to button. If temperature is between 45-65~F (7-18~C), use masking tape to firmly hold the button to the windshield and allow the adhesive to cure for at least 15 minutes.

PART NUMBER	PART NAME	CLASS
D9AZ-19554-CA	Rear View Mirror Adhesive	B

OTHER APPLICABLE ARTICLES: NONE
WARRANTY STATUS:
Eligible Under Basic Warranty Coverage For 1990 Luxury; 1990 And 1991 Non-Luxury, All Others Eligible Under The Provisions Of Bumper To Bumper Warranty Coverage

OPERATION	DESCRIPTION	TIME
941702A	Re-Attach Rear View Mirror	0.5 Hr.

DEALER CODING

BASIC PART NO.	CONDITION CODE
17698	03

OASIS CODES: 102000, 103000, 107000

Technical Service Bulletin # **97-17-2** Date: **970818**

Rear View Mirror - Reattachment

Article No.
97-17-2

08/18/97

REAR VIEW MIRROR - NEW PROCEDURE FOR PREFERRED REATTACHMENT METHOD

FORD:
1990-94 TEMPO
1990-97 CROWN VICTORIA, MUSTANG, TAURUS, THUNDERBIRD
1990-98 ESCORT
1992-97 PROBE
1995-98 CONTOUR

LINCOLN-MERCURY:
1990-92 MARK VII
1990-94 TOPAZ
1990-97 COUGAR, GRAND MARQUIS, SABLE
1990-98 CONTINENTAL, TOWN CAR
1991-98 TRACER
1993-97 MARK VIII
1995-98 MYSTIQUE

LIGHT TRUCK:
1990-96 BRONCO
1990-97 AEROSTAR, ECONOLINE, F-150-350 SERIES, RANGER
1991-97 EXPLORER
1993-97 VILLAGER
1995-98 WINDSTAR
1997 EXPEDITION, MOUNTAINEER
1998 NAVIGATOR

ISSUE:
This TSB article introduces a new procedure and tool for reattaching the inside rear view mirror assembly in the event the mirror detaches.

ACTION:
Utilize the new Rotunda Mirror Button Applicator (164-R3925) to bond the mirror button to the windshield. This preferred method provides improved adhesion performance. Refer to the following Service Procedure for details.

SERVICE PROCEDURE

CAUTION:
DO NOT USE THIS PROCEDURE IF WINDSHIELD IS DAMAGED (e.g., CHIPPED, CRACKED, OR EXHIBITS STAR BREAKS) WITHIN 152 mm (61 OF THE MIRROR BUTTON, AND IF PLASTIC FILMS HAVE BEEN APPLIED TO THE INSIDE SURFACE OF

THE WINDSHIELD (SUCH AS ADDITIONAL GRADIENT BANDS) WITHIN 51 mm (2") OF THE MIRROR BUTTON.

1. Mark original location of bracket on outside of windshield with any appropriate marking tool (e.g., white china marker) before you begin.

NOTE:
SURFACES MUST BE CLEAN FOR PROPER BONDING TO OCCUR.

2. Use the following steps to ensure proper cleaning of windshield:

   a. Carefully remove any adhesive residue from the windshield using a new single edge razor blade.

   b. Spray the inside surface of the windshield with a glass cleaner and wipe with a clean, soft, lint free cloth.

3. Remove the liner from the pre-applied tape and apply the button directly onto the windshield at the marked location.

   Button sizes:

   ^ F7AZ-17698-AA Small Footprint Size (16 mm X 33 mm)

   ^ F7AZ-17698-BA Large Footprint Size (21 mm X 29 mm)

4. Center the curing head of the Rotunda Mirror Button Applicator (164-R3925) over the button.

5. Hold the curing head in place and press the "ON" button to activate the vacuum pump. Press the "START" button of the time/temperature controller to begin the cure cycle. Immediately clean the mirror button location marks from the outside of the windshield. Do not release the curing head until the cycle is completed.
   The AUTOMATIC CYCLE (once the start button is pressed) is as follows:

   a. Time of curing cycle will be displayed.

   b. Time will stay constant until cure temperature 185°C (365°F) is reached.

   c. Once the cure temperature is reached, display will reflect time remaining for complete cure.

CAUTION:
THE HEATER BLOCK MAY STILL BE WARM. HANDLE WITH A GLOVE AND AVOID CONTACT WITH ANY SURFACE THAT MAY BE DAMAGED BY HIGH TEMPERATURE.

6. Turn the applicator off. Press the vacuum release button and remove the curing head from the windshield.

7. Once the button has cooled to ambient temperature (about 5 minutes), reattach the mirror assembly.

PART NUMBER	PART NAME
F7AZ-17698-AA	Rear view Mirror Button (Small 16 mm X 33 mm)
F7AZ-17698-BA	Rear view Mirror Button (Large - 21 mm X 29 mm)

OTHER APPLICABLE ARTICLES: 94-17-2
WARRANTY STATUS: INFORMATION ONLY
OASIS CODES: 102000, 103000, 107000

Technical Service Bulletin # **94161** Date: **940810**

Air Dam - Skirt Loose At Front Crossmember

Article No.
94-16-1

08/10/94

^ AIR DAM SKIRT (VALANCE) - LOOSE - AT FRONT CROSSMEMBER - BUILD DATES 4/16/92 TO 2/21/94

^ LOOSE AIR DAM SKIRT (VALANCE) - AT FRONT CROSSMEMBER - BUILD DATES 4/16/92 TO 2/21/94

FORD:
1993-94 PROBE

ISSUE:
The front air dam skirt (valance) may be loose at the front crossmember. This may be caused by loose or missing attaching grommets (thereby, only

one bolt may be retaining the air dam skirt). New production has added an additional bolt to the skirt assembly.

ACTION:
To prevent/repair this problem, refer to the following procedure.

REPAIR PROCEDURE:

Replace the factory installed grommets with aftermarket license plate nuts, screws and washers.

1. Insert nylon nuts into the crossmember.

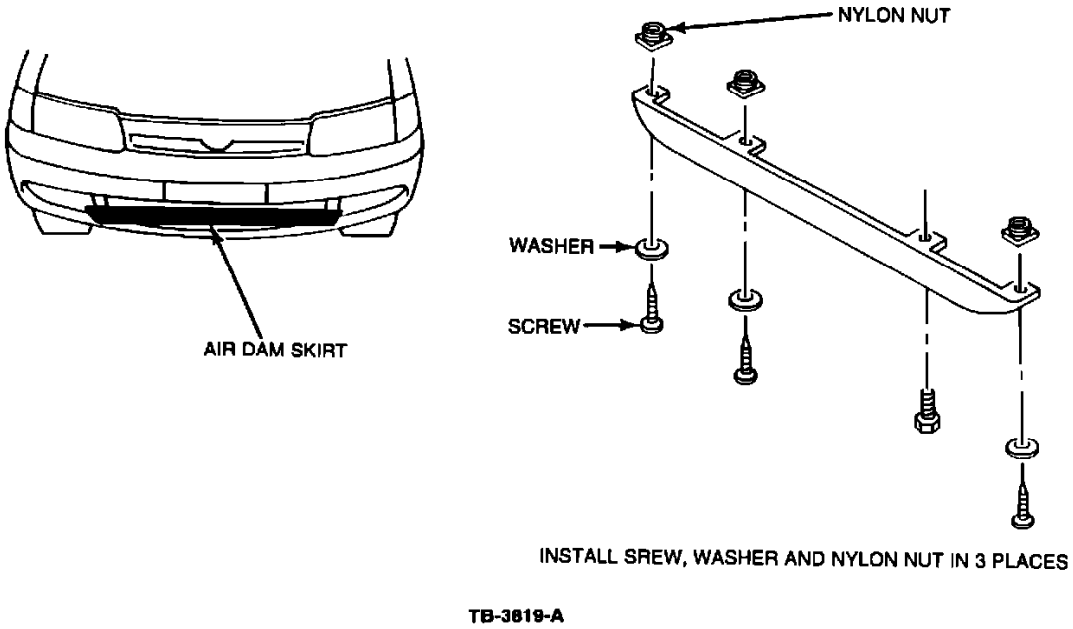

Figure 1

2. Install the air dam skirt by using washers and screws as shown in Figure 1.

Ford recommends the use of Auveco fasteners. These fasteners are available through Sarjo (1-800-447-2756).

PART NUMBER	PART NAME	CLASS
Call Sarjo (1-800-447-2756) 100 Piece Min. Order		
8606	Flat Washer	
9603	Screw	
11719	Nylon Nut	

Parts Block

OTHER APPLICABLE ARTICLES: NONE
WARRANTY STATUS:
Eligible Under The Provisions Of Bumper To Bumper Warranty Coverage

OPERATION	DESCRIPTION	TIME
941601A	Remove Grommets And Replace With Nylon Screws And Nuts	0.3 Hr.

DEALER CODING

BASIC PART NO.	CONDITION CODE
17626	57

OASIS CODES: 108000, 402000

Technical Service Bulletin # **93212** Date: **931013**

Ashtray Cover - Falls Into Console

Article No.
93-21-2

1993 Ford Probe L4-121 2.0L DOHC VIN A MFI

10/13/93

ASHTRAY - COVER - FALLS INTO CENTER CONSOLE - GT AND BASE MODELS BUILT THROUGH 3/31/93

FORD:
1993 PROBE

This TSB article is being republished in its entirety to correct the base part numbers.

ISSUE:
The ashtray cover may fall into the center console. This occurs after pressure is accidentally applied on the ashtray door when it is in the open position.

PART NUMBER	PART NAME	CLASS
F32Z-61045A36-N	Center Console - Ebony	C
F32Z-61045A36-P	Center Console - Red	C
F32Z-61045A36-Q	Center Console - Blue	C
F32Z-61045A36-R	Center Console - Gray	C
F32Z-61045A36-S	Center Console - Ebony (Includes Armrest)	C
F32Z-61045A36-T	Center Console - Red (Includes Armrest)	C
F32Z-61045A36-U	Center Console - Blue (Includes Armrest)	C
F32Z-61045A36-V	Center Console - Gray (Includes Armrest)	C

ACTION:
Install a revised center console which has a new ashtray cover stop added which prevents it from falling out. Refer to the 1993 Probe Service Manual, Page 01-12-7, for removal and installation procedures. Refer to the Parts Block in this article for correct parts usage.

OTHER APPLICABLE ARTICLES: NONE
SUPERSEDES: 93-16-1
WARRANTY STATUS:
Eligible Under Bumper To Bumper Warranty Coverage

OPERATION	DESCRIPTION	TIME
932102A		0.5 Hr.

DEALER CODING

BASIC PART NO.	CONDITION CODE
70045A36	33

OASIS CODES: 107000

Technical Service Bulletin # **99-8-16** Date: **990503**

Motor Oil - Viscosity Grade Recommendation

Article No.
99-8-16

05/03/99

MOTOR OIL - SAE VISCOSITY GRADE
RECOMMENDATION - SERVICE TIP

FORD:
1989-1993 FESTIVA
1989-1994 TEMPO
1989-1997 PROBE, THUNDERBIRD
1989-1999 CROWN VICTORIA, ESCORT, MUSTANG, TAURUS
1994-1997 ASPIRE
1995-1999 CONTOUR

LINCOLN-MERCURY:
1989-1992 MARK VII
1989-1994 TOPAZ
1989-1997 COUGAR
1989-1999 CONTINENTAL, GRAND MARQUIS, SABLE, TOWN CAR, TRACER
1991-1994 CAPRI

1993 Ford Probe L4-121 2.0L DOHC VIN A MFI

1994-1998 MARK VIII
1995-1999 MYSTIQUE
1999 COUGAR

LIGHT TRUCK:
1989-1990 BRONCO II
1989-1996 BRONCO
1989-1997 AEROSTAR, F SUPER DUTY
1989-1999 ECONOLINE, F-150, F-250 LD, RANGER
1991-1999 EXPLORER
1993-1999 VILLAGER
1995-1999 WINDSTAR
1997-1999 EXPEDITION, MOUNTAINEER
1998-1999 NAVIGATOR
1999 SUPER DUTY F SERIES

ISSUE
Ford Motor Company now recommends SAE 5W-30 viscosity grade for servicing any Ford gasoline-powered vehicle regardless of model year.

ACTION
When servicing any Ford gasoline-powered vehicle, use SAE 5W-30 viscosity grade motor oil. Refer to the following text for further details.

Both SAE 10W-30 and SAE 5W-30 viscosity grade motor oils have been recommended in the past depending on vehicle model and model year.

Tests have proven SAE 5W-30 viscosity grade motor oil provides the optimum protection and benefits for Ford gasoline engines. At both high and low ambient temperature conditions, SAE 5W-30 provides the best overall protection. It allows faster starts under cold ambient temperatures.

SAE 5W-30 also provides approximately 1/2% increase in fuel economy over SAE 10W-30.

SAE 5W-30 viscosity grade motor oils certified for gasoline engines by the American Petroleum Institute (API) should be used for all service procedures requiring replacement of the motor oil.

PART NUMBER	PART NAME
XO-5W30-QSP	5W-30 Motorcraft Super Premium Motor Oil

OTHER APPLICABLE ARTICLES: NONE
WARRANTY STATUS: INFORMATION ONLY
OASIS CODES: 401000, 490000, 499000

Technical Service Bulletin # **93110** Date: **930105**

Cooling System - Proper Fluid Concentrations

Article No.
93-1-10

01/05/93

COOLING SYSTEM - PROPER FLUID CONCENTRATIONS

FORD:
1988 EXP
1988-93 CROWN VICTORIA, ESCORT, FESTIVA, MUSTANG, TAURUS, TEMPO, THUNDERBIRD
1989-93 PROBE

LINCOLN-MERCURY:
1988-89 TRACER
1988-92 MARK VII
1988-93 CONTINENTAL, COUGAR, GRAND MARQUIS, SABLE, TOPAZ, TOWN CAR
1991-93 CAPRI, TRACER
1993 MARK VIII

MERKUR:
1988-89 XR4TI
1988-90 SCORPIO

LIGHT TRUCK:
1988-90 BRONCO II
1988-93 AEROSTAR, BRONCO, ECONOLINE, F SUPER DUTY, F-150-350 SERIES, RANGER
1991-93 EXPLORER
1993 VILLAGER

ISSUE:
It is important to confirm the coolant fluid concentration during any repair of a vehicle's cooling system. A 50/50 concentration of Ford cooling system fluid, or an equivalent solution meeting Ford specifications, and water is best for all normal operating conditions.

ACTION:
Check the coolant fluid concentration and use a 50/50 solution concentration for optimum results.

CAUTION:
IF THE CONCENTRATION IS ALLOWED TO VARY TO ANY LARGE EXTENT EITHER WAY, COOLING SYSTEM CONCERNS CAN RESULT. IF THE COOLING SYSTEM FLUID LEVEL IS BELOW THE 50/50 CONCENTRATION, OVERHEATING CAN OCCUR. CONCENTRATIONS ABOVE 50/50 CAN CONTRIBUTE TO EXCESSIVE AND EVEN PREMATURE FAILURE OF THE WATER PUMP (MORE IS NOT BETTER).

1. Obtain a balanced mixture ratio of 50/50 cooling system fluid to water. Premix the two fluids in a separate container by adding equal volumes of coolant and water.

2. Be aware that overfilling of the coolant system is just as bad as not maintaining the proper coolant concentration level. If the coolant system is overfilled, and the system is allowed to expand dropping the excess coolant past the expansion tank, many of the vital coolant additives will be lost out the overflow pipe. This reduces the protection to the engine.

3. Pour in only enough coolant as specified for the system, and top off as necessary.

NOTE:
TOP OFF ONLY WITH A PREMIXED 50/50 SOLUTION.

4. Check the coolant concentration, once the coolant system has been properly filled, to be sure that it is truly within the allowed tolerance range.

   a. Use only a hand held refractometer such as a Rotunda Optical Antifreeze/Battery Tester # 021-00046 or equivalent to verify results. The acceptable coolant/water concentration range is: Minimum (45/55); Maximum (60/40).

   b. If the coolant system is found to be low on coolant, top off only from a premixed solution.

   c. If a weak concentration is found, add straight coolant sparingly until concentration readings are within acceptable levels.

   d. If too strong a concentration is found, remove a small volume of coolant, and add water sparingly until coolant readings again fall within the specified levels.

NOTE:
MAKE SURE THE COOLANT IS THOROUGHLY MIXED BEFORE TAKING READINGS.

A cooling system is only as effective as the condition of the system coolant.

^ USE ONLY FORD COOLING SYSTEM FLUID OR AN EQUIVALENT SOLUTION MEETING FORD SPECIFICATIONS.

^ FOR ADDITIONAL INFORMATION, SEE THE APPROPRIATE VEHICLE SERVICE MANUAL OR OWNER GUIDE.

WARRANTY STATUS: INFORMATION ONLY

OASIS CODES:
402000, 499000

Technical Service Bulletin # **95182** Date: **950911**

Recycled Engine Coolant - Service Tips

Article No.
95-18-2

09/11/95

^ COOLANT - USE OF RECYCLED ENGINE, COOLANT - SERVICE TIP

^ COOLING SYSTEM - USE OF RECYCLED ENGINE, COOLANT - SERVICE TIP

FORD:
1980 and after CROWN VICTORIA, MUSTANG, THUNDERBIRD
1981 and after ESCORT
1982-88 EXP

1993 Ford Probe L4-121 2.0L DOHC VIN A MFI

1984-94 TEMPO
1986 and after TAURUS
1988-93 FESTIVA
1989 and after PROBE
1994 and after ASPIRE
1995 and after CONTOUR

LINCOLN-MERCURY:
1980 and after CONTINENTAL, COUGAR, GRAND MARQUIS, TOWN CAR
1981-86 CAPRI
1981-87 LYNX
1984-92 MARK VII
1984-94 TOPAZ
1986 and after SABLE
1987-89 TRACER
1991-94 CAPRI
1991 and after TRACER
1993 and after MARK VIII
1995 and after MYSTIQUE

MERKUR:
1985-89 XR4TI
1988-89 SCORPIO

LIGHT TRUCK:
1980 and after F-150-350 SERIES
1981 and after ECONOLINE
1982 and after BRONCO
1983 and after RANGER
1984-90 BRONCO II
1986 and after AEROSTAR
1988 and after F SUPER DUTY
1991 and after EXPLORER
1993 and after VILLAGER
1995 and after WINDSTAR

This TSB is being republished in its entirety to include warranty information when using recycled coolant

ISSUE:
Ford Motor Company authorizes the use of recycled engine coolant that, when properly processed and reinhibited, meets Ford specification ESE-M97B44-A. At this time, the Rotunda Coolant Recycler (181-00003) process is the only approved coolant recycling method available through Ford that is capable of producing recycled engine coolant that meets Ford specification ESE-M97B44-A.

ACTION:
Refer to the following Service Procedure for coolant processing and reinhibiting using Rotunda Coolant Recycler (181-00003).

NOTE:
WHILE TESTING SHOWS THAT RECYCLED ENGINE COOLANT CAN PROVIDE ACCEPTABLE PERFORMANCE, THE COOLANT PRODUCED FROM ROTUNDA EQUIPMENT IS INTENDED FOR USE WITHIN DEALERSHIPS ON WARRANTY AND CUSTOMER PAY REPAIRS ONLY AND NOT INTENDED FOR RETAIL SALE. THERE ARE REGULATORY, PACKAGING AND LABELING CONCERNS ASSOCIATED WITH THE RETAIL SALE OF CHEMICAL PRODUCTS.

CAUTION:
THE REINHIBITOR CHEMICALS PROVIDED WITH THIS EQUIPMENT ARE NOT APPROPRIATE FOR USE ON MEDIUM/HEAVY TRUCK APPLICATIONS.

WARNING:
ROTUNDA PREMIUM COOLANT REINHIBITORS # 1 AND # 2 HAVE BEEN SPECIFICALLY FORMULATED TO WORK WITH ROTUNDA COOLANT RECYCLER (181-00003).

USE OF ANY OTHER CHEMICAL ADDITIVES WITH THIS SYSTEM WILL VOID ALL WARRANTIES FOR THE EQUIPMENT AND FOR THE FINAL COOLANT PRODUCT.

SERVICE PROCEDURE

DIRECTIONS FOR PROCESSING USED ENGINE
COOLANT WITH ROTUNDA COOLANT
RECYCLER

1. Close the drain valve on the unit.

2. Open the fill valve.

3. Pour used engine coolant into the funnel on the side of the unit.

NOTE:
MAXIMUM CAPACITY 15 25 GALLONS (95 L).

4. Insert the outlet hoses of the recycler into clean, properly labeled containers. One (1) container is for the outlet process water and the other container is for distilled ethylene glycol.

5. Push the "ON" switch on the front to start the operation. The unit will process 1 gallon (3.8 L) per hour of operation and will automatically shut off when cycle is complete.

6. Add reinhibitor following the directions in this article.

7. Open the drain valve to drain the residue from the distillation vessel. Dispose of residue in accordance with all local. state and federal regulations.

ADDING REINHIBITOR CHEMICALS

1. Process the coolant according to the directions listed in this article

2. Thoroughly mix 4 fl oz (118 ml) of Reinhibitor # 1 to each gallon of distilled ethylene glycol.

3. Thoroughly mix 4 fl oz (118 ml) of Reinhibitor # 2 to each gallon of distilled ethylene glycol.

4. Mix well.

5. Check the pH level of the coolant. The pH level must be between 9 and 11.

6. Add enough water to the concentrated coolant to produce a 50/50 mixture of coolant and water.

NOTE:
THE CONCENTRATED COOLANT MUST BE MIXED WITH WATER TO MEET THE NECESSARY ENGINE FREEZE PROTECTION.

7. Check the coolant freeze point of the 50% coolant solution. Freeze point should be -34°F (-37°C).

Consult the Rotunda Coolant Recycler Manual for more detailed operating instructions. Call 1-800-ROTUNDA, 8 AM to 8 PM EST, for inquiries regarding the Rotunda Coolant Recycler and to order the Reinhibitor (187-R0001).

PART NUMBER	PART NAME
Rotunda # 187-R0001	Rotunda Premium Coolant Reinhibitor

WARRANTY CLAIMS: Dealer can claim recycled engine coolant by Ford approved process via a warranty repair on an 1863 claim as follows:

Part Number: RECCOOL (not a valid part number, but it is recognized on an 1863 claim).

Quantity: Indicate the number of QUARTS of recycled coolant used.

OTHER APPLICABLE ARTICLES: NONE
SUPERSEDES: 95-16-6
WARRANTY STATUS: INFORMATION ONLY
OASIS CODES: 402000

Technical Service Bulletin # **01-23-6** Date: **011126**

Engine Coolant - Propylene Glycol Recommendations

Article No.
01-23-6

11/26/01

^ ENGINE COOLANT - PROPYLENE GLYCOL - FORD MOTOR COMPANY POSITION ON ENGINE COOLANTS MADE FROM PROPYLENE GLYCOL

^ ENGINE COOLANT - PROPYLENE GLYCOL-BASED - FORD MOTOR COMPANY

1993 Ford Probe L4-121 2.0L DOHC VIN A MFI

POSITION ON PROPYLENE GLYCOL-BASED
ENGINE COOLANTS

FORD:
1989-1993 FESTIVA
1989-1994 TEMPO
1989-1997 PROBE, THUNDERBIRD
1989-2002 CROWN VICTORIA, ESCORT, MUSTANG, TAURUS
1994-1997 ASPIRE
1995-2000 CONTOUR
2000-2002 FOCUS
2002 THUNDERBIRD
1989-1990 BRONCO II
1989-1996 BRONCO
1989-1997 AEROSTAR, F SUPER DUTY
1989-2002 ECONOLINE, F-150, RANGER
1991-2002 EXPLORER
1995-2002 WINDSTAR
1997-2002 EXPEDITION
1999-2002 SUPER DUTY F SERIES
2000-2002 EXCURSION
2001-2002 ESCAPE, EXPLORER SPORT TRAC, EXPLORER SPORT
2000-2002 F-650, F-750

LINCOLN:
1989-1992 MARK VII
1989-2002 CONTINENTAL, TOWN CAR
1993-1998 MARK VIII
2000-2002 LS
1998-2002 NAVIGATOR
2002 BLACKWOOD

MERCURY:
1989-1994 TOPAZ
1989-1997 COUGAR
1989-2002 GRAND MARQUIS, SABLE
1991-1994 CAPRI
1991-1999 TRACER
1995-2000 MYSTIQUE
1999-2002 COUGAR
1993-2002 VILLAGER
1997-2002 MOUNTAINEER

MERKUR:
1989 SCORPIO, XR4TI

This article is being republished in its entirety to update the model year coverage.

ISSUE
This TSB article describes Ford Motor Company's position on the use of propylene glycol-based engine coolants.

ACTION
Ford Motor Company does not recommend nor endorse the use of engine coolants made with propylene glycol in Ford vehicles. Ford Motor Company currently recommends the use of ethylene glycol-based engine coolants.

Published information suggests that engine coolants made with propylene glycol may provide engine cooling performance equivalent to engine coolants made with ethylene glycol. However, different brands of engine coolant provide varying corrosion protection for the cooling system. Ford does not have performance data for the multitude of engine coolants available in the aftermarket and therefore cannot recommend the use of any coolant except those sold by Ford Customer Service Division. Consult the vehicle's Owner's Guide to determine the appropriate Ford Customer Service Division coolant for the vehicle.

Furthermore, claims of toxicological and environmental advantages of propylene glycol over ethylene glycol may be misleading. When significant new information is developed, Ford will review this policy.

Ford Motor Company specifications recommend that vehicles be maintained using certain ethylene glycol-based engine coolants. Those specifications do not refer to engine coolants made with propylene glycol. Although the Ford New Vehicle Limited Warranty is not automatically voided upon the use of a coolant made with propylene glycol, if such use results in damage to the vehicle or its components, the cost of repairing the damage would not be covered by the Ford New Vehicle Limited Warranty.

OTHER APPLICABLE ARTICLES: NONE

1993 Ford Probe L4-121 2.0L DOHC VIN A MFI

SUPERSEDES: 96-16-4
WARRANTY STATUS: INFORMATION ONLY
OASIS CODES: 402000Technical Service Bulletin # **941610** Date: **940810**

Engine Valve Spring Retainer/Upper Seat - Parts Change

Article No.
94-16-10

08/10/94

ENGINE - 2.0L - VALVE SPRING RETAINER KEY AND VALVE UPPER SPRING SEAT PART CHANGES

FORD:
1993-94 PROBE

ISSUE:
The valve spring retainer key's shape and outside diameter have been changed and requires a revised valve upper spring seat.

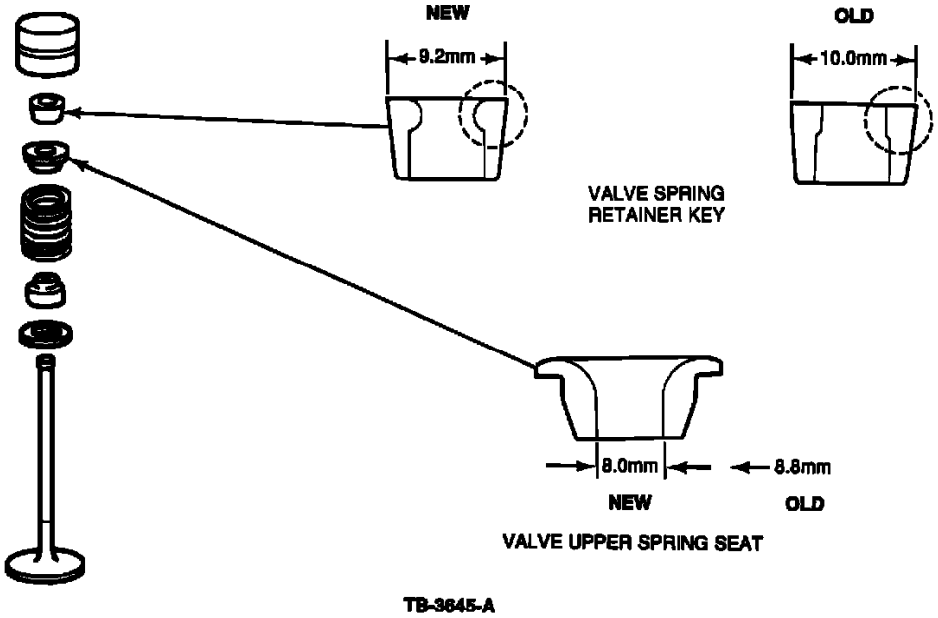

Figure 1

ACTION:
If service is required, change the valve spring retainer key and valve upper spring seat as a set. The revised and previous parts are not interchangeable. Refer to the 1993-94 Probe Service Manual, Section 03-01B and Figure 1, for service details.

PART NUMBER	PART NAME	Class
F32Z-6514-E	Seat - Valve Spring (Upper)	CG
F32Z-6518-A	Valve Spring Retainer Key	CG

OTHER APPLICABLE ARTICLES: NONE
WARRANTY STATUS: INFORMATION ONLY
OASIS CODES: 499000

Technical Service Bulletin # **98-20-10** Date: **981012**

Exhaust System - Buzzing/Rattling Noise

Article No.
98-20-10

10/12/98

^ EXHAUST SYSTEM - LOOSE CATALYST OR MUFFLER HEAT SHIELDS

^ NOISE - "BUZZING" OR "RATTLING" - LOOSE CATALYST OR MUFFLER HEAT SHIELDS

1993 Ford Probe L4-121 2.0L DOHC VIN A MFI

FORD:
1993 FESTIVA
1993-94 TEMPO
1993-97 PROBE, THUNDERBIRD
1993-99 CROWN VICTORIA, ESCORT, MUSTANG, TAURUS
1994-97 ASPIRE
1995-99 CONTOUR

LINCOLN-MERCURY:
1993-94 CAPRI, TOPAZ
1993-99 CONTINENTAL, COUGAR, GRAND MARQUIS, SABLE, TOWN CAR, TRACER
1995-99 MYSTIQUE

LIGHT TRUCK:
1993-96 BRONCO
1993-97 F SUPER DUTY, F-35O
1993-99 AEROSTAR, ECONOLINE, EXPLORER, F-150, F-250 LD, RANGER
1995-99 WINDSTAR
1997-99 EXPEDITION, MOUNTAINEER, VILLAGER
1998-99 NAVIGATOR
1999 F-250 HD, SUPER DUTY F SERIES

This TSB article is being republished in its entirety to include additional vehicles and to include 1999 model year vehicles.

ISSUE
A "buzzing" or "rattling" noise from the exhaust system may be caused by a loose heat shield attachment to the catalytic converter, catalytic pipes, muffler pipes and/or muffler. The noise is noticeable during normal driving conditions or at engine idle.

ACTION
Install worm clamps to secure loose heat shield attachments. Refer to the following Service Procedure for details.

SERVICE PROCEDURE

1. Inspect for loose shields. If shield(s) is missing, this TSB does not apply. Refer to the appropriate Service or Workshop Manual for repair procedures

NOTE
UNDER NO CIRCUMSTANCES SHOULD A HEAT SHIELD BE REMOVED WITHOUT REPLACEMENT BEFORE THE VEHICLE IS RETURNED TO THE CUSTOMER.

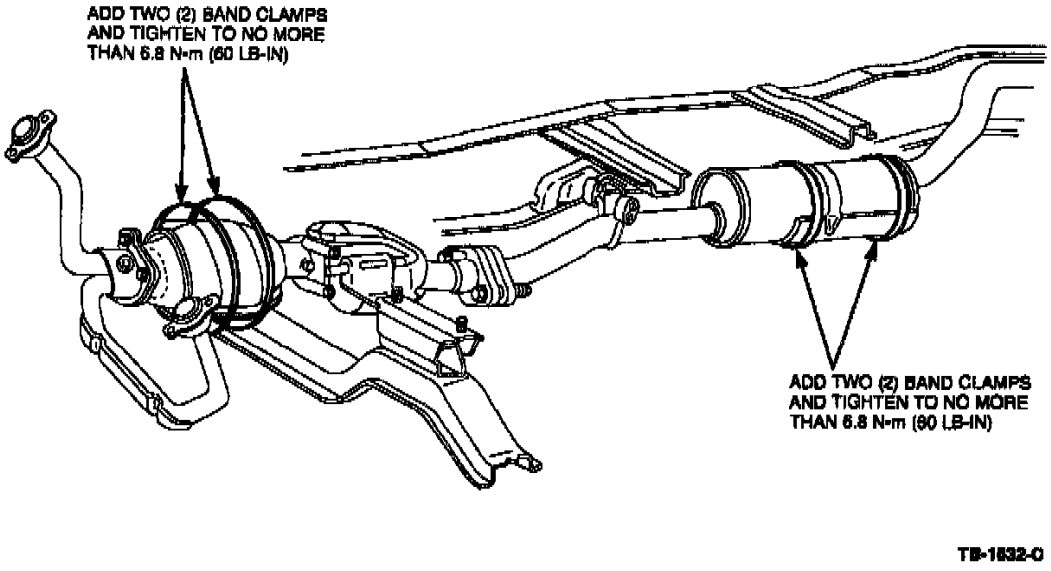

Figure 1

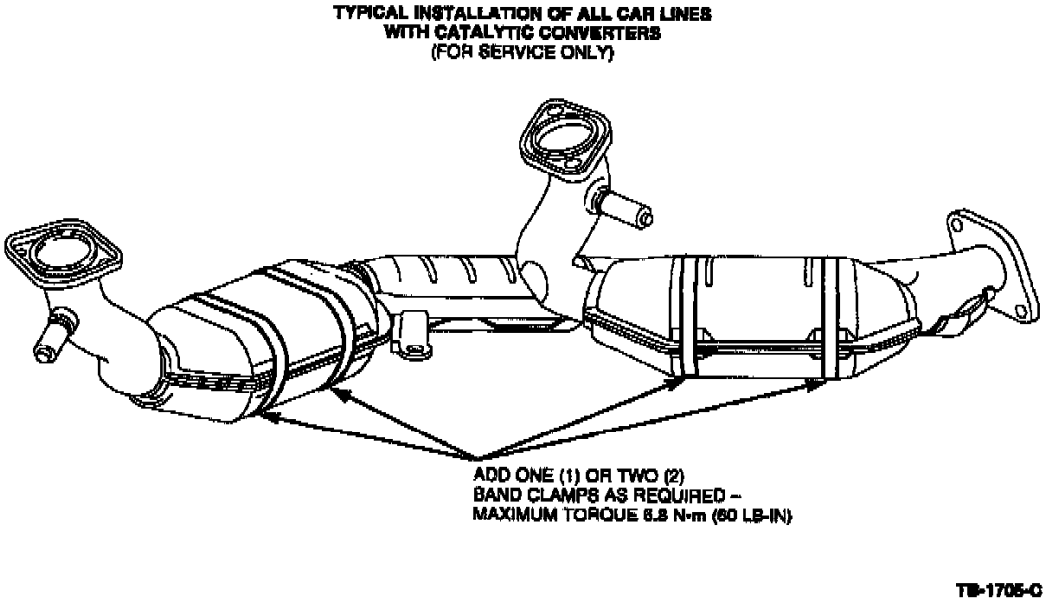

Figure 2

2. Install worm clamps to the catalytic converter, catalytic pipes, muffler pipes or muffler as shown in Figure 1 for the typical light truck and Figure 2 for the typical passenger car.

3. Align the clamps to secure the heat shield to the catalytic converter, catalytic pipes, muffler pipes or muffler as required.

4. Tighten the clamps to 6.8 N.m (60 lb-in).

5. Trim the excess "ear" of the clamp to approximately 2.54 cm (1").

PART NUMBER	PART NAME
FOTZ-5A231-A	Worm clamp (4-1/2" To 9-1/2")
W705949-S300	Worm clamp (3/4" To 4")

OTHER APPLICABLE ARTICLES: NONE

SUPERSEDES: 98-6-4

WARRANTY STATUS: Eligible Under Basic Warranty Coverage For 1991 And Prior Models Bumper To Bumper Warranty Coverage For 1992-99 Models, And Any Applicable Emissions Warranty Coverage

OPERATION	DESCRIPTION	TIME
982010A	Install One (1), Two (2), Or Four (4) Worm Clamps	0.3 Hr.

DEALER CODING

BASIC PART NO.	CONDITION CODE
5E258	33

OASIS CODES: 403000, 702000, 702100, 702200, 703000

Technical Service Bulletin # **951610** Date: **950814**

A/T - New Rotunda Fluid Changer Service Tip

Article No.
95-16-10

08/14/95

FLUID - NEW ROTUNDA FLUID CHANGER - SERVICE TIP

FORD:
1980 and after CROWN VICTORIA, ESCORT, MUSTANG, THUNDERBIRD
1982-88 EXP

1993 Ford Probe L4-121 2.0L DOHC VIN A MFI

1984-94 TEMPO
1986 and after TAURUS
1988-93 FESTIVA
1989 and after PROBE
1994 and after ASPIRE
1995 and after CONTOUR

LINCOLN-MERCURY:
1980 and after CONTINENTAL, COUGAR, GRAND MARQUIS, TOWN CAR
1981-87 LYNX
1984-92 MARK VII
1984-94 TOPAZ
1986 and after SABLE
1987-89 TRACER
1991-94 CAPRI
1991 and after TRACER
1993 and after MARK VIII
1995 and after MYSTIQUE

MERKUR:
1985-89 XR4TI
1988-89 SCORPIO

LIGHT TRUCK:
1980 and after F-150-350 SERIES
1981 and after ECONOLINE
1982 and after BRONCO
1983 and after RANGER
1984-90 BRONCO II
1986 and after AEROSTAR
1988 and after F SUPER DUTY
1991 and after EXPLORER
1993 and after VILLAGER
1995 and after WINDSTAR

ISSUE:
Rotunda Equipment has available a new piece of equipment for automatic transmission fluid changes. Using the Rotunda ATF 2000 (199-00001) is an efficient way to change automatic transmission fluid.

ACTION:
When changing automatic transmission fluid using the Rotunda ATF 2000 (199-00001) it is not necessary to remove the transmission pan and/or torque converter drainplug. Contact Rotunda Equipment at 1-800-ROTUNDA for more information regarding the Rotunda ATF 2000.

OTHER APPLICABLE ARTICLES: NONE
WARRANTY STATUS: INFORMATION ONLY
OASIS CODES: 510000

Technical Service Bulletin # **99-15-2** Date: **990726**

A/T - Transmission Flush and Fill Tool Available

Article No
99-15-2

07/26/99

TRANSMISSION - NEW TRANSMISSION FLUSH AND
FILL TOOL AVAILABLE THROUGH ROTUNDA

FORD:
1985-1994 TEMPO
1985-1997 THUNDERBIRD
1985-1999 CROWN VICTORIA, ESCORT, MUSTANG
1986-1999 TAURUS
1988-1993 FESTIVA
1993-1997 PROBE
1994-1997 ASPIRE
1995-1999 CONTOUR
1985-1990 BRONCO II
1985-1996 BRONCO

1993 Ford Probe L4-121 2.0L DOHC VIN A MFI

1985-1997 F-250 HD, F-350
1985-1999 ECONOLINE, F-250 LD, RANGER
1986-1997 AEROSTAR
1988-1997 F SUPER DUTY
1991-1999 EXPLORER
1995-1999 WINDSTAR
1997-1999 EXPEDITION
1999 SUPER DUTY F SERIES

LINCOLN:
1985-1992 MARK VII
1985-1999 CONTINENTAL, TOWN CAR
1993-1998 MARK VIII
1998-1999 NAVIGATOR

MERCURY:
1985-1994 TOPAZ
1985-1997 COUGAR
1985-1999 GRAND MARQUIS
1986-1999 SABLE
1991-1999 TRACER
1995-1999 MYSTIQUE
1999 COUGAR
1997-1999 MOUNTAINEER

ISSUE
A new flush and fill tool has been released. This improved design simplifies fluid exchange within the vehicle.

ACTION
The TransServe(R) II (Rotunda 211-0018) is a more effective way to change the transmission fluid and remove the old contaminated fluid in the system. The TransServe(R) II may be used any time the transmission fluid needs replacement. Refer to the 19g9 Rotunda Equipment Catalog for more information.

OTHER APPLICABLE ARTICLES: NONE

WARRANTY STATUS: INFORMATION ONLY

OASIS CODES: 504000Technical Service Bulletin # **ATRATB028** Date: **901001**

A/T - Engine Vacuum Testing

BULLETIN: # 028

DATE: October 1990

SUBJECT: Engine Testing With A Vacuum Gauge

TRANSMISSION: All

Engine Testing With A Vacuum Gauge

ENGINE/TRANSMISSION RELATIONS

An important part of transmission diagnosis is to make certain the engine operates properly. If the engine performance is incorrect, the transmission will receive the wrong information.

The engine sends signals to the transmission through a vacuum line, throttle cable or both. These signals basically synchronize torque with transmission line pressure, shift feel and shift timing.

Malfunctions in items like the air filter, spark plugs, EGR valves and other parts of the fuel, electrical and emission systems could result in improper transmission performance.

VACUUM GAUGE ENGINE PERFORMANCE TESTING

A vacuum gauge shows the difference between outside atmospheric pressure and the amount of vacuum present in the intake manifold.

The pistons in the engine serve as suction pumps and the amount of vacuum they create is affected by the related actions of:

^ Piston rings

- Valves
- Ignition system
- Fuel control system
- Other parts affecting the combustion process (emission devices, etc.).

Each has a characteristic effect on vacuum and you judge their performance by watching variations from normal.

It is important to judge engine performance by the general location and action of the needle on a vacuum gauge, rather than just by a vacuum reading. Gauge readings which may be found are as follows:

NORMAL ENGINE OPERATION

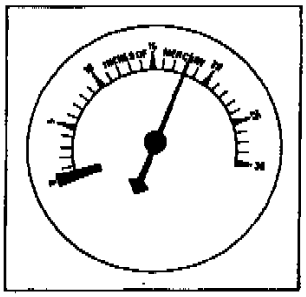

Figure 1

At idling speed, an engine at sea level should show a steady vacuum reading between 14" and 22" HG. A quick opening and closing of the throttle should cause vacuum to drop below 5" then rebound to 23" or more. See figure 1.

GENERAL IGNITION TROUBLES OR STICKING VALVES

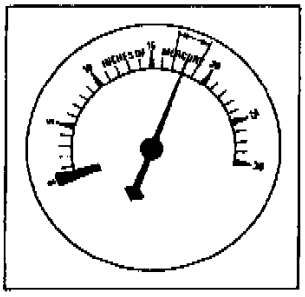

Figure 2

With the engine idling, continued fluctuation of 1 to 2 inches may indicate an ignition problem. Check the spark plugs, spark plug gap, primary ignition circuit, high tension cables, distributor cap or ignition coil. Fluctuations of 3 to 4 inches may be sticking valves. See figure 2.

INTAKE SYSTEM LEAKAGE, VALVE TIMING, OR LOW COMPRESSION

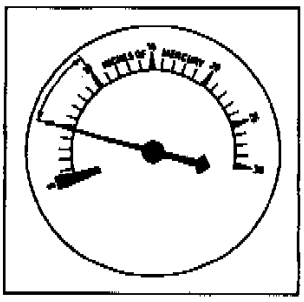

Figure 3

A vacuum reading at idle much lower than normal can indicate leakage through intake manifold gaskets, manifold-to-carburetor gaskets, vacuum brakes or the vacuum modulator. Low readings could also be very late valve timing or worn piston rings. See figure 3.

EXHAUST BACK PRESSURE

Starting with the engine at idle, slowly increase engine speed to 3000 RPM, engine vacuum should be equal to or higher than idle vacuum at 3000 RPM.

If vacuum decreases at higher engine RPM's, an excessive exhaust back pressure is probably present.

CYLINDER HEAD GASKET LEAKAGE

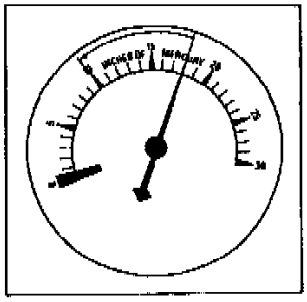

Figure 4

With the engine Idling, the vacuum gauge pointer will drop sharply, every time the leak occurs. The drop will be from the steady reading shown by the pointer to a reading of 10" to 12" Hg or less. If the leak Is between two cylinders, the drop will be much greater. You can determine the location of the leak by compression tests. See figure 4.

FUEL CONTROL SYSTEM TROUBLES

All other systems in an engine must be functioning properly before you check the fuel control system as a cause for poor engine performance. If the pointer has a slow floating motion of 4 to 5 inches - you should check the fuel control.

BULLETIN RECAP

- Engine problems can affect transmission performance.
- If you suspect an engine problem, connect a vacuum gauge to the intake manifold.
- Note the location and action of the vacuum gauge needle.
- Use the information in the bulletin to determine the engine problem.
- Correct the engine problem before doing extensive calibration work on the transmission.

Technical Service Bulletin # **ATRATB078** Date: **911101**

A/T - How To Use A Pressure Gauge

BULLETIN : # 078

SUBJECT: Pressure Gauge

APPLICATION: Misc.

DATE: November 1991

HOW TO USE A PRESSURE GAUGE

A significant number of calls we receive involve improper pressures, so we need to use a pressure gauge when diagnosing problems.

Using a pressure gauge can seem like a formidable task. The reason most people do not use a pressure gauge is because they do not see the value in using one. Technicians do not see the value because the gauge readings do not tell them how to fix the problem. This article will attempt to show the technician how to interpret pressure gauge readings so the technician can find the fix to the problem.

	SLOW IDLE	FAST IDLE	WOT
P			X
R			
N			X
D			
3			
2			
1			

Figure 1

It is best to start pressure tests with mainline pressure. Mainline pressure should be checked in each range: P, R, N, D, 3, 2, 1. Each range, except Park and Neutral, should be checked under three conditions: Slow idle, fast idle, and wide open throttle. A form, as in figure 1 should be made to record the readings.

If all pressures are within specification at slow idle then the pump and pressure regulator are functioning properly.

If all pressures are low at slow idle, it indicates a potential problem in the pump, pressure regulator, filter, low fluid, or internal leakage. To help verify where the problem is, check pressures at fast idle. If all the pressures now read normally, it usually indicates a worn pump but the problem could still be internal leaks.

Internal leaks will usually show up in a particular range. For example a forward clutch leak would have normal pressure in Park, Reverse and Neutral but have low pressure in all forward ranges. A direct clutch leak will show a pressure drop when the transmission shifts to third and low pressure in reverse because in most cases, the direct clutch is on in third and reverse.

A restricted filter will usually show up as a gradual pressure drop at higher engine RPM because the filter cannot pass as much fluid as the pump is trying to draw.

A stuck pressure regulator valve will show up as fixed line pressure which means the same pressure all the time. The pressure may vary with engine RPM which means low pressure at slow RPM and higher pressure at higher RPM. There will be no boost in pressure from the TV or modulator system and no reverse boost.

If pressures are high at slow idle it indicates a pressure regulator or throttle pressure problem. On most cars, the modulator controls throttle pressure. If the transmission has a throttle pressure tap, it will tell you if the throttle pressure circuit is the problem. On GM units without a throttle pressure tap, remove the TV plunger. If line pressure is now normal then it's a TV problem, if not it's a pressure regulator problem.

Pressures also need to be checked at stall or wide open throttle (WOT). When doing a stall test, always observe safety precautions such as checking for broken mounts or bad brakes. Testing should always be done under operating conditions. To do a stall test, put the selector in the range to be tested and with one foot firmly on the brake, press the accelerator to the floor then note your pressure reading. Some technicians will pull the vacuum line off or pull the TV cable with the engine at fast idle. That is not operating conditions and will not detect a problem of trapped vacuum or a cable problem.

If all pressure at stall are low, then you should pull the TV cable to maximum or disconnect the vacuum line. If the pressures are now OK, the problem is in the cable or vacuum system. If the pressures are still low, then the problem is in the pump or control system.

If all pressures at stall are high, then look at the idle pressures. If the idle pressures are also high then this could be a pressure regulator or throttle system problem. If idle pressures are normal then the problem is in just the throttle system.

The reverse stall test is also a maximum pump output test. If you suspect a weak pump then this test will help find it. Often this will show up as low pressure at reverse stall but all other pressures including idle will be normal. If a person wanted to become really proficient with a pressure gauge they should first put a pressure gauge on their own vehicle and leave it there for exactly one week. Every time they drive the car they should watch the gauge. After one week, they should then put the pressure gauge on every single car in the shop that DOES NOT have a problem. Don't use the gauge on cars WITH problems yet. After 30 days of using a gauge on units that work properly, they can then start using the gauge on units with problems. The technician is accustomed to normal readings, abnormal readings will stand out like a sore thumb.

To fix today's transmissions, every professional technician must be proficient in the use of a pressure gauge. The only way to gain this proficiency is to use the pressure gauge daily. Practice makes perfect.

Technical Service Bulletin # **ATRATB132** Date: **920901**

A/T - Intermittent Electrical Problems

TECHNICAL BULLETIN # 132

DATE: Sep. 1992

TRANSMISSIONS: All Electronically Shifted Units

1993 Ford Probe L4-121 2.0L DOHC VIN A MFI

SUBJECT: Intermittent Electrical Problems

APPLICATION: All Electronically Shifted Units

Intermittent Electrical Problems

Wrong gear starts, no upshift, no downshift, falling out of 4th gear, etc may be caused by poor grounds. This applies to any electronically shifted unit, import or domestic.

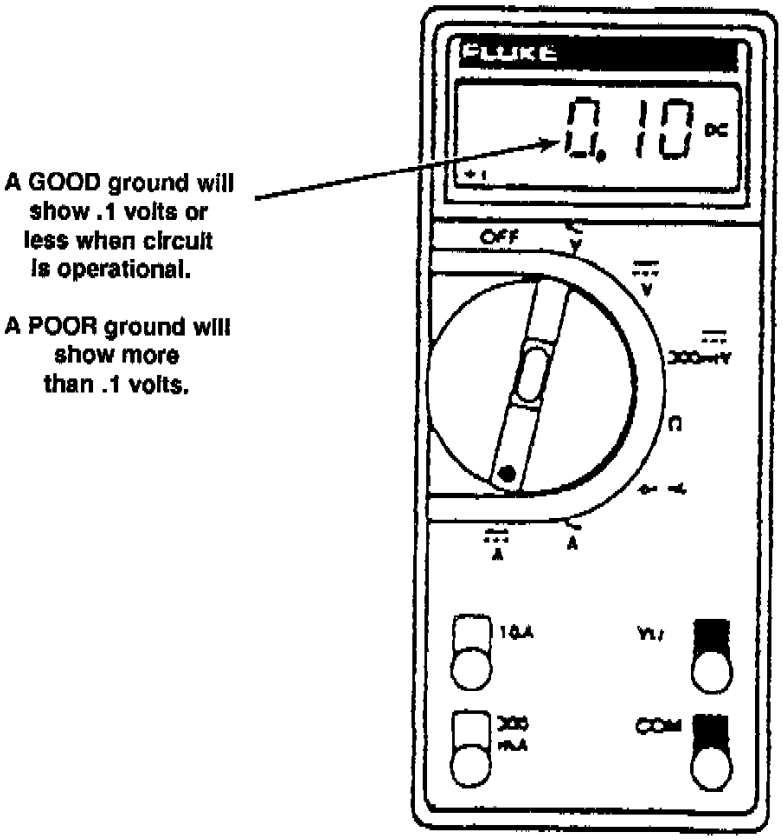

To test for a poor ground, connect the black lead of your digital voltmeter directly to the negative battery post and probe the suspect ground wire with the positive lead. A good ground will read 0.1 volts or less. More than 0.1 volts is a poor ground. Keep in mind the circuit must be operating to accurately check the ground.

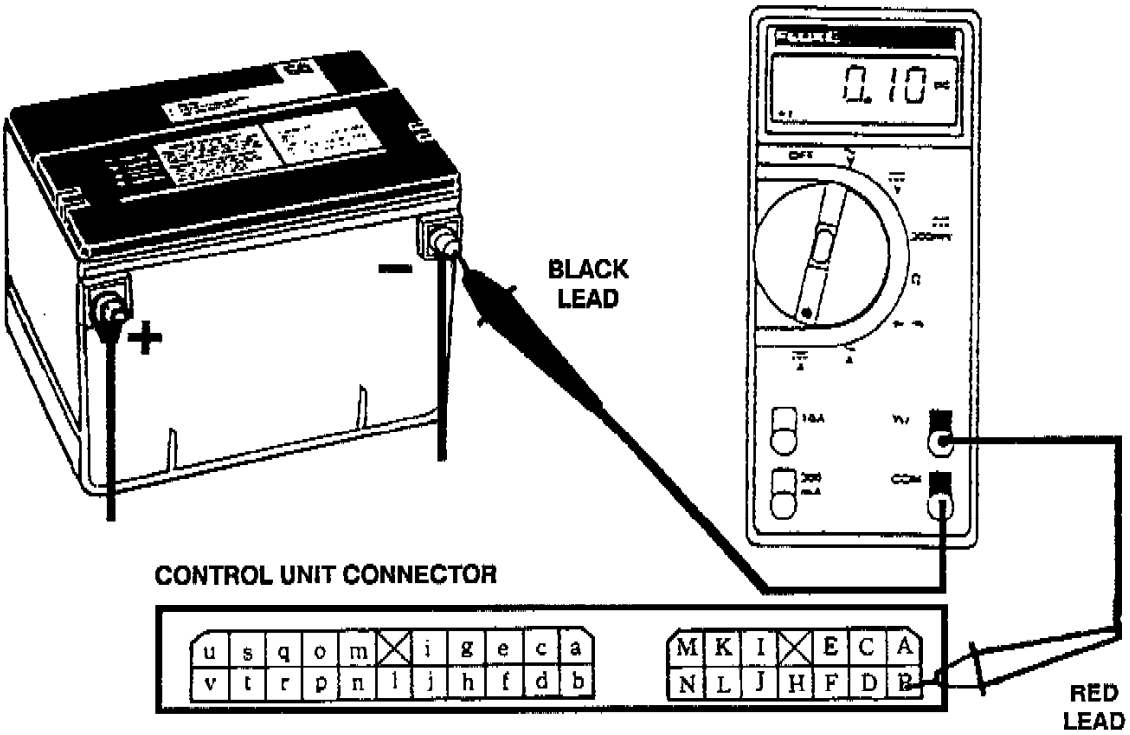

TERMINAL	CONNECTION TO	OPERATION	VOLTAGE
A	Battery	IG ON	Approx. 12
		IG OFF	0
B	Ground	Ground	0
C	Back-Up Battery		Approx. 12
D	Ground	Ground	0
E	Solenoid Valve Battery	IG ON	Approx. 12
		IG OFF	0
F	Fluid Temperature Switch	Above 150 degrees C (302 degrees F)	0
		Below 143 degrees C (289 degrees F)	Approx. 10 -12
H	1-2 Solenoid Valve	"R" range	Approx. 12
		"P" range	0
I	2-3 Solenoid Valve	"R" range	0
		"P" range	Approx. 12
J	3-4 Solenoid Valve	"R" range	0
		"P" range	Approx. 12
K	Lock-Up Solenoid Valve	In lock-up condition	Approx. 12
		Except in lock-up condition	0
L	Overdrive OFF Indicator	Button out (No up-shift into "4")	0
		Button in (Up-shift into "4")	Approx. 12
M	Inspection Code of ED-AT Tester		Code No.
N	(For Troubleshooting)		Code No.

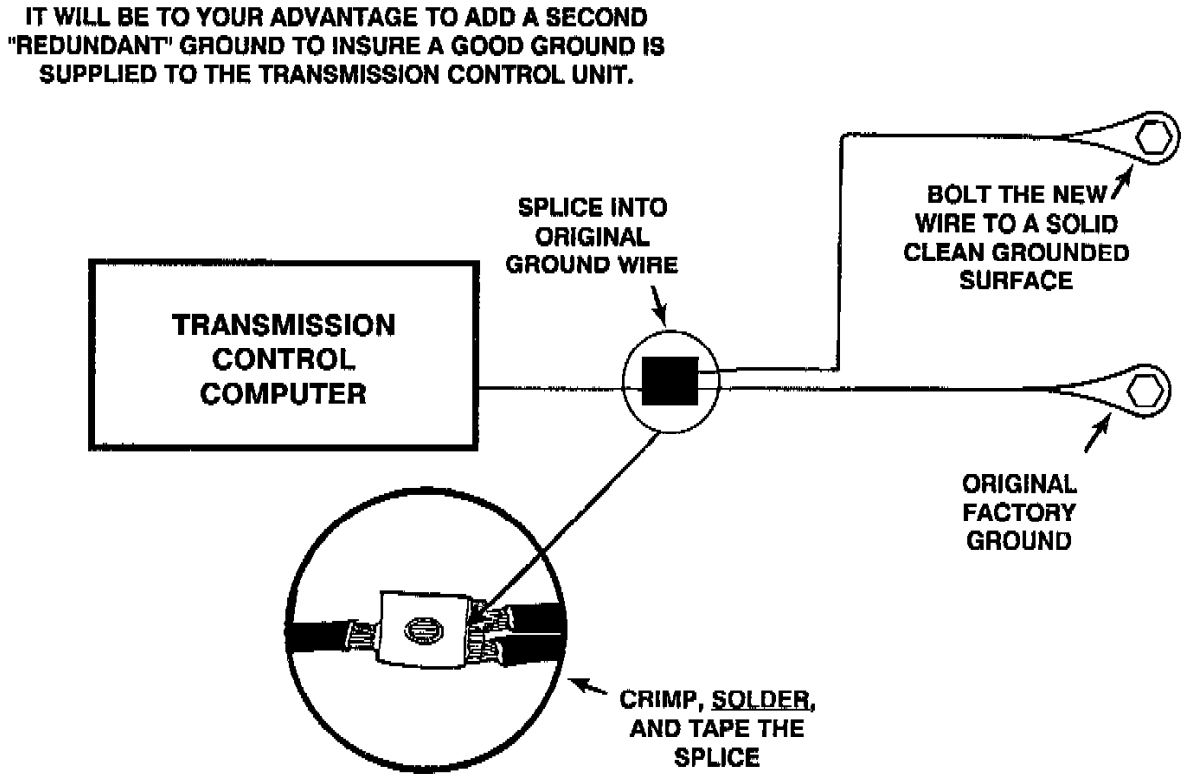

When checking a suspect poor ground always probe the wire terminal itself and not the bolt, since corrosion may insulate the wire yet the bolt is grounded.

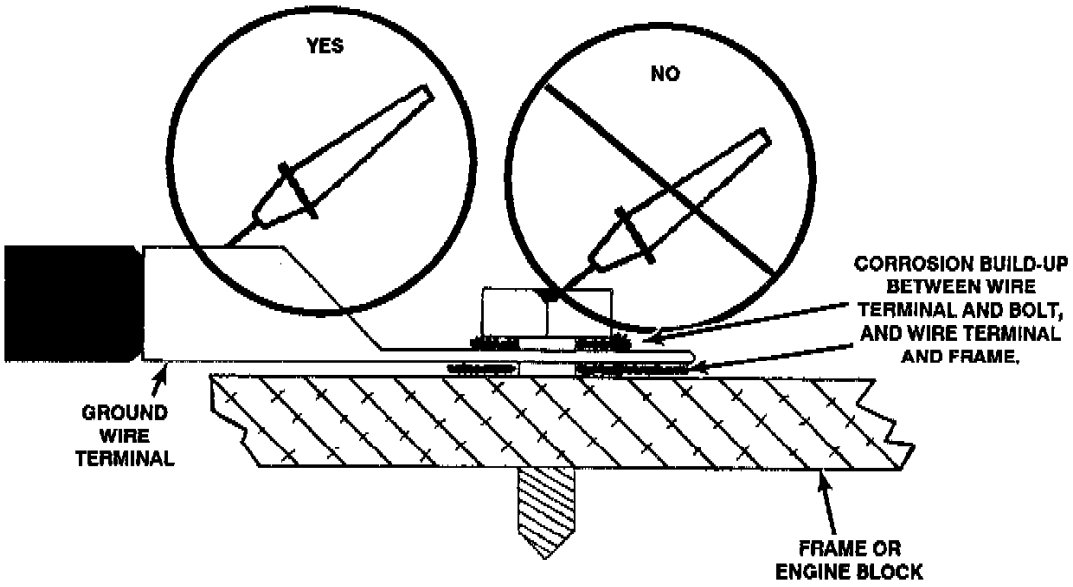

Using a service manual for the vehicle you are working on, locate the transmission computer ground circuit. In the example shown, B and D are the grounds. Now with the vehicle running in gear, backprobe B and D with the positive lead. Make sure the negative lead is hooked directly to the NEGATIVE BATTERY POST. The voltmeter must read 0.1 or less.

Technical Service Bulletin # **ATRATB154** Date: **930101**

A/T - F4EAT Diagnostic Information

TECHNICAL BULLETIN # 154

TRANSMISSION: F4EAT

SUBJECT: GENERAL INFORMATION

APPLICATION: FORD - MAZDA

1993 Ford Probe L4-121 2.0L DOHC VIN A MFI

DATE: JAN 1993

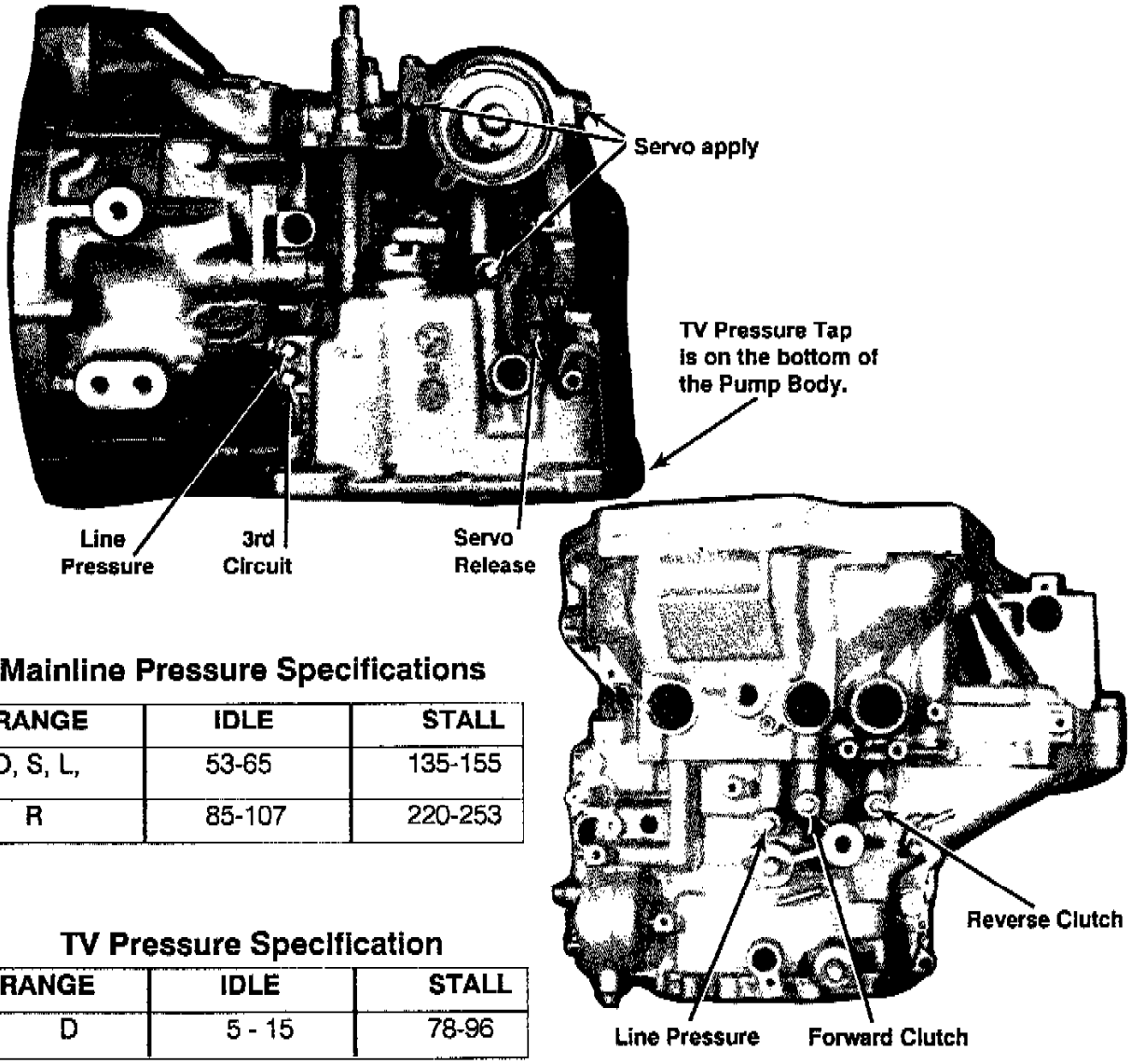

Mainline Pressure Specifications

RANGE	IDLE	STALL
D, S, L,	53-65	135-155
R	85-107	220-253

TV Pressure Specification

RANGE	IDLE	STALL
D	5 - 15	78-96

PRESSURE TAP IDENTIFICATION AND SPECIFICATIONS

Solenoid Pattern

Gear	1-2 Solenoid	2-3 Solenoid	3-4 Solenoid
1st	OFF	ON	ON
2nd	ON	ON	ON
3rd	OFF	OFF	OFF
4th	ON	OFF	ON

Solenoid Resistance -13 -27Ω

12 PIN TRANSAXLE HARNESS CONNECTOR

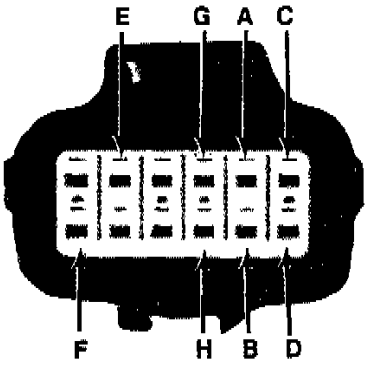

A = 1-2 Solenoid
B = 2-3 Solenoid
C = 3-4 Solenoid
D = TCC Solenoid
E = Thermistor
F = Thermistor
G = Pulse Generator
H = Pulse Generator

The resistance of the thermistor changes according to temperature.

THERMISTOR SPECIFICATIONS	
ATF Temperature °C (°F)	Resistance (kΩ)
-20 (-4)	124.8-142.0
0 (32)	52.0-57.4
20 (68)	23.4-25.0
40 (104)	11.1-12.1
60 (140)	5.6-6.3
80 (176)	3.0-3.4
100 (212)	1.7-2.0
120 (248)	1.1-1.2
130 (266)	0.86-0.92

The Pulse Generator is located on top of the case, near the pump.

The resistance of the pulse generator (measured between terminals G & H) should be 200-400 Ω.

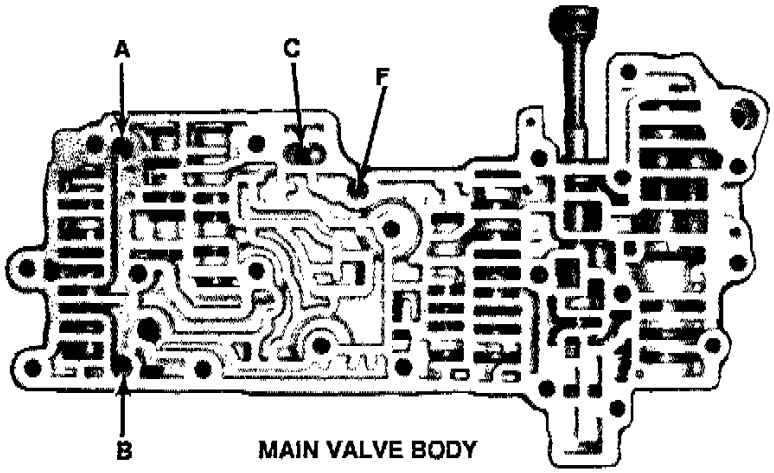

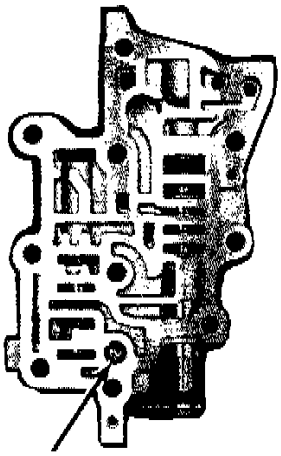

TV LIMIT BALL & SPRING

TV LIMIT SPRING WEIGHS 2lbs 6oz @ .620

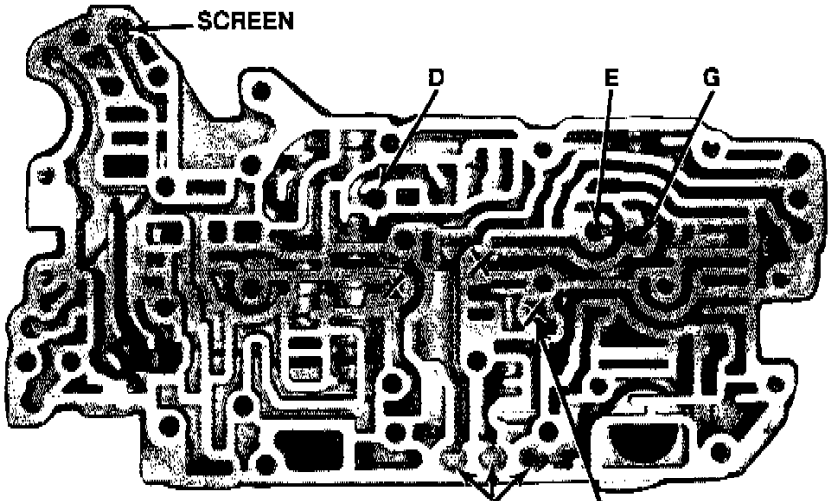

PREMAIN VALVE BODY

A ball installed in this location may cause no 2nd and no 4th.

CHECKBALL FUNCTIONS

A = Forward clutch feed
B = Coast clutch feed
C = Low reverse shuttle
D = Reverse clutch feed
E = 3rd circuit feed
F = Low reverse exhaust (Not used on all models)
G = 3-2 control to 3-2 timing valve (Not used on all models)

VALVE BODY CHECKBALLS

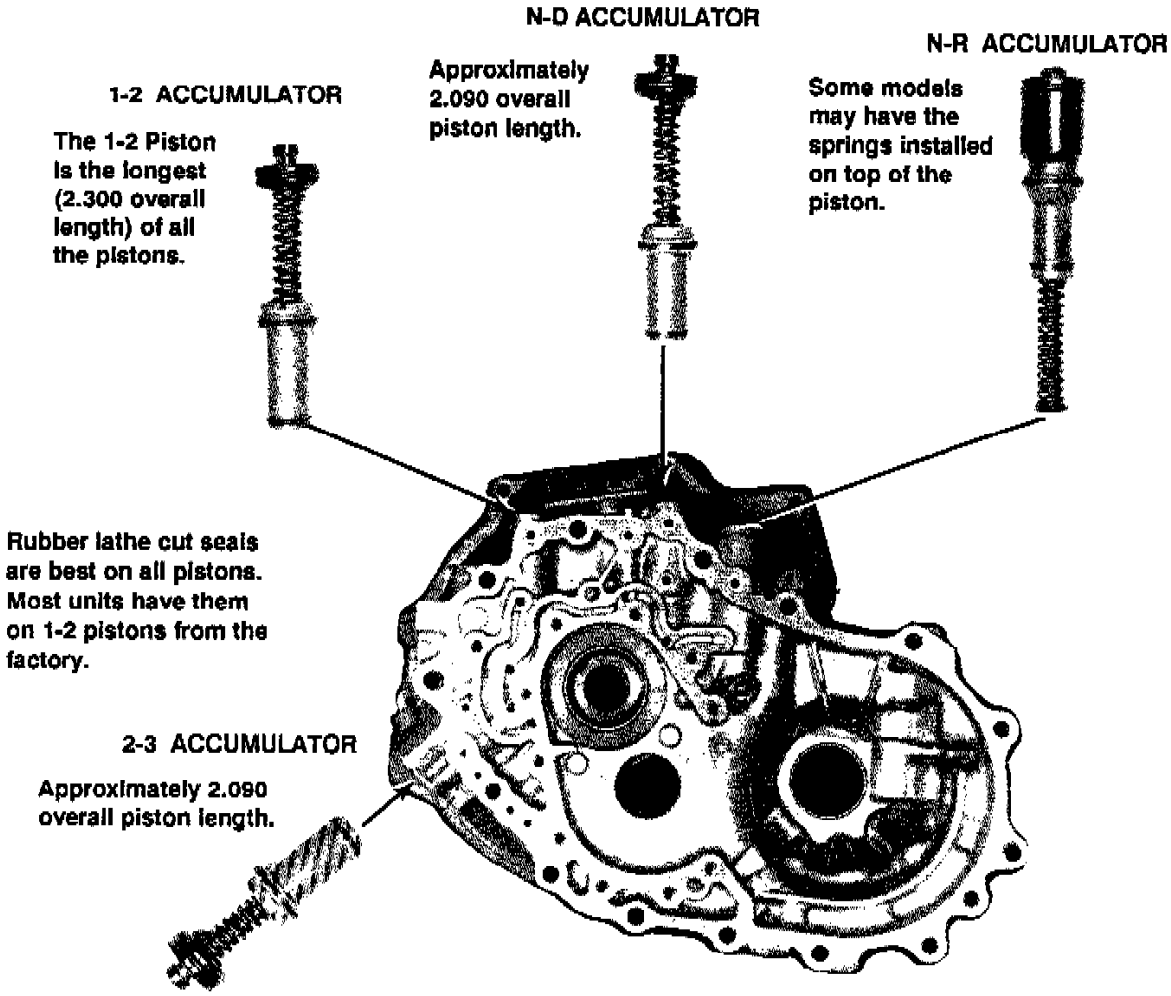

Pistons installed in wrong locations can cause bind-ups and wrong gear starts.

ACCUMULATOR INSTALLATION

CAUTION

There are several different arrangements of springs used in the accumulators depending on the model. Tag all springs during disassembly to eliminate confusion.

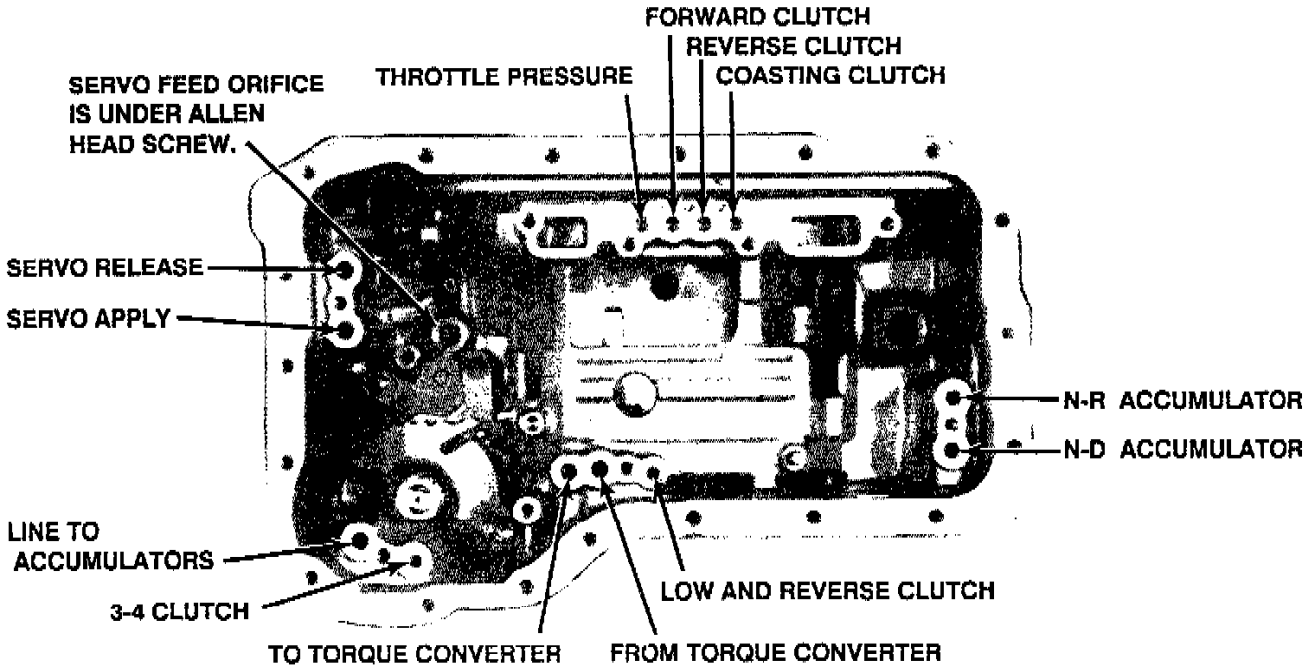

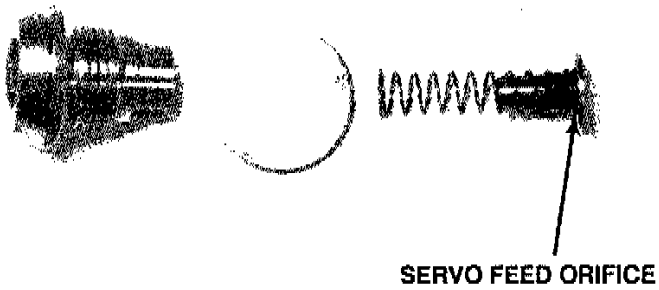

AIR CHECK POINTS

There is a servo feed orifice located under the big alien head screw, by the linkage. It would be a good idea to remove it for cleaning. Soap residue from hot water washing machines (or other debris) is likely to interfere with its operation.

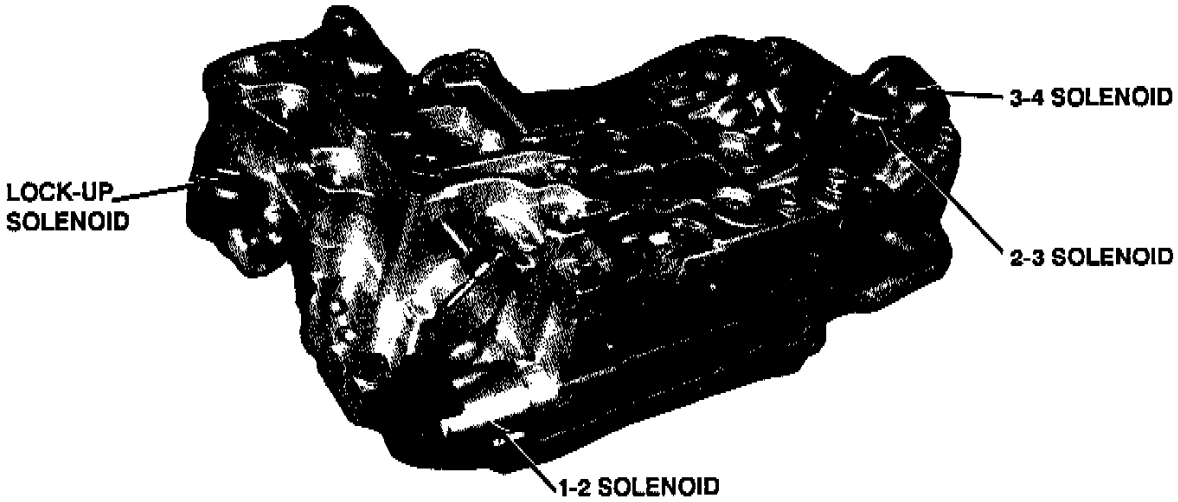

All solenoids are normally closed and measure approximately 13-27 Ω resistance.

All solenoids have feed screens in the valve body over the snout of the solenoids. Clean and re-install them to protect the solenoids from clogging with debris.

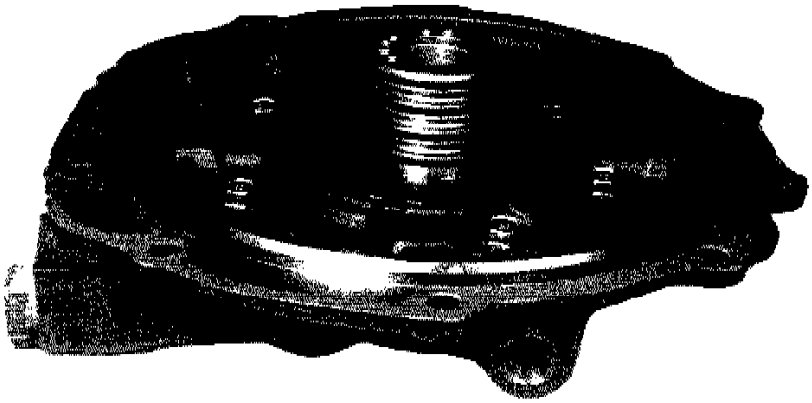

The 4 oil sealing rings on the pump tower are very critical.

Factory seal rings are available separately from Ford under Part #FICZ-7D019-A.

VALVE BODY SOLENOID IDENTIFICATION

Technical Service Bulletin # **ATRATB170** Date: **930601**

A/T - G4A-EL, 4EAT Erratic Pressure Rise

TECHNICAL BULLETIN # 170

TRANSMISSION: G4A-EL/4EAT

SUBJECT: ERRATIC PRESSURE RISE

APPLICATION: MAZDA/FORD

DATE: June 1993

G4A-EL/4EAT ERRATIC PRESSURE RISE

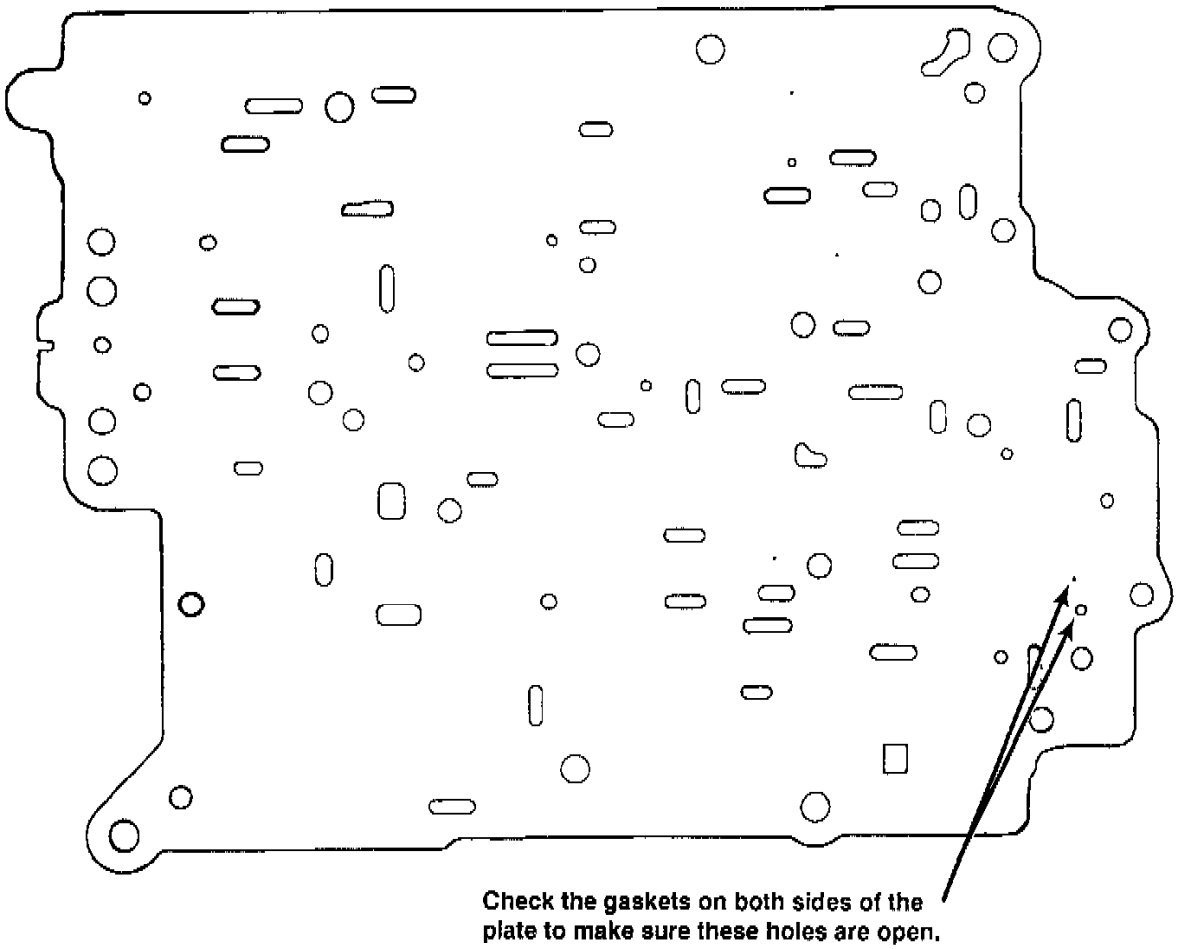

N0 pressure rise or high pressure after kickdown can be caused by the wrong valve body gaskets. When you replace the valve body gaskets make sure the T.V. balance hole isn't closed off.

Technical Service Bulletin # **ATRATB180** Date: **930801**

A/T - G4AEL, G4AHL, F4EAT, F4AEL Shift Feel Complaints

TECHNICAL BULLETIN # 180

TRANSMISSION: G4A-EL / G4A-HL, F4EAT / F4A-EL

SUBJECT: Shift Feel Complaints

APPLICATION: Ford - Mazda

DATE: Aug 1993

G4A-EL / G4A-HL / F4EAT / F4A-EL

SHIFT FEEL COMPLAINTS

G4A-EL / G4A-HL / F4EAT / F4A-EL	
COMPLAINT	USE SPRING #
Rough 1-2 and/or 3-4 upshift F4EAT/F4A-EL	3
Rough 1-2 and/or 3-4 upshift G4A-HL/EL	4
2-3 Cut loose (flare up)	1
Rough 2-3 (momentary bind-up)	3 OR 4
1-2 or 3-4 slide or runaway	1

Many shift feel concerns on the units listed above may be modified to help reduce or eliminate customer complaints. Listed in this bulletin are descriptions of several servo return springs which can be used to help fine tune shift feel A basic application guide for use is listed below.

There is a limit as to what servo return spring calibrations can accomplish. However, considering the difficulty and time involved to R & R the

valve body (especially G4A-EL and G4A-HL) it can be very cost effective to at least try a different spring.

Keep in mind that these springs will not fix an assembly error such as;

- Incorrect clearances
- Stuck valves
- Mis-located valve body orifices or balls
- Mis-adjusted TV
- Wrong valve body gaskets, etc.

Spring Identification

Spring # 1- This is the weakest spring listed here.
Part # F1CZ -7D028-A Color code - Yellow
Original application:
Escort/Tracer F4EAT - 1.9L engine applications

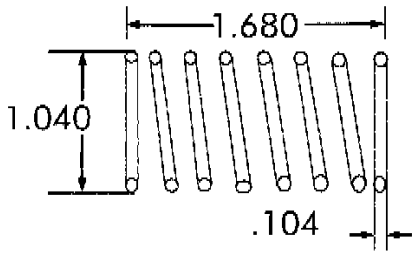

Dimensions (approximate)
Free length..... 1.680"
Outside diameter..... 1.040"
Wire diameter..... 104"
Tension..... 25lbs at 1.100"

Spring # 2 - Most common G4A-EL and F4EAT spring.
Part # E92Z - 7D028A Color code - Plain
Original application:
Non-Turbo G4A-EL/G4A-HL
Escort/Tracer F4EAT - 1.8L engine applications

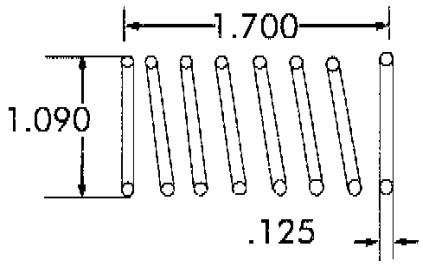

Dimensions (approximate)
Free length..... 1.700"
Outside diameter..... 1.090"
Wire diameter..... 125"
Tension..... 50lbs at 1.100"

Spring # 3 - Service replacement spring for F4EAT
Part # F1CZ-7D028-B Color code - Red
Original application:
Released for rough 1-2 and 3-4 upshift on F4EAT

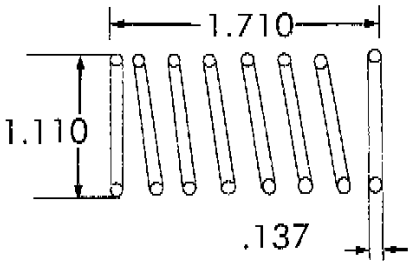

Dimensions (approximate)
Free length..... 1.710"
Outside diameter..... 1.110"
Wire diameter..... 137"
Tension..... 55lbs at 1,100"

Spring # 4 - This is the strongest spring listed here.
Part # F02Z-7D028-A Color code - Blue
Original application:
G4A-EL turbocharged engine applications

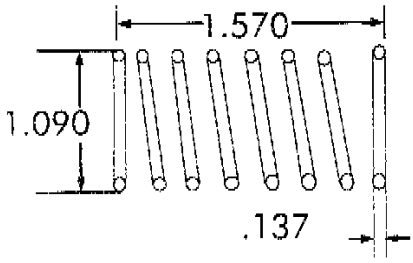

Dimensions (approximate)
Free length..... 1.570"
Outside diameter..... 1.090"
Wire diameter..... 137"
Tension..... 60lbs at 1.100"

Technical Service Bulletin # **ATRATB191** Date: **931001**

A/T - Failsafe Modes

TECHNICAL BULLETIN # 191

DATE: Oct. 93

TRANSMISSION: None

SUBJECT: Failsafe Modes

APPLICATION: General

FAILSAFE MODES

Quite often you will find late model vehicles with computer shifted transmissions coming in that start off in "D" in the wrong gear. Instead of 1st, they take off in 2nd, 3rd or 4th gear.

This can happen for several different reasons, caused by either internal transmission problems, or external control system problems.

Internal transmission causes of this problem can be faulty solenoids or stuck valves.

External control systems can also cause wrong gear starts. Two common external causes are:

^ a complete loss of power or ground to the control system.

^ a failsafe protection strategy initiated by the computer to protect itself or the transmission from an observed problem.

Both the "No Power" problem and the "Fail Safe Strategy" problem result in the same wrong gear start condition. The gears that you get in each shifter position are the same.

7 POSITION SHIFTER						
TRANSMISSION		PRN	D OR D4	D OR 3	S OR 2	L OR 1
GM	4L30E	PRN	4	4	3	1
	4L60E	PRN	3	3	2	2
	4L80E	PRN	2	2	2	2
	4T60E	PRN	3	3	2	2
	4T80E	PRN	2	2	2	2
	F-7	PRN	2	2	2	1
ISUZU/GEO	JF403E	PRN	3	3	3	3
SUBARU	4AT	PRN	3	3	3	3
VW/AUDI	096-097	PRN	3	3	3	1
ZF	4HP22/24EH	PRN	3 OR 4	3 OR 4	3 OR 4	3 OR 4

6 POSITION SHIFTER					
TRANSMISSION		PRN	D OR 3	S OR 2	L OR 1
FORD	E4OD	PRN	4	2	2
	AXODE	PRN	3	3	2
	AODE	PRN	2	2	2
	A4LDE	PRN	3	2	2
	4EAT	PRN	3	3	1
	F4EAT	PRN	3	3	1
CHRYSLER	41TE (604)	PRN	2	2	2
	42LE	PRN	2	2	2
NISSAN INFINITY	RE4R01A	PRN	3	3	2
	RE4R03A	PRN	3	3	2
	RE4F02A	PRN	3	3	2
SUBARU	-4AT-	PRN	3	3	3
HONDA--ACURA--SATURN		PRN	4	4	2
MITSUBISHI	KM175,6,7	PRN	3	3	3
MAZDA	F4AEL	PRN	3	3	1
	G4AEL	PRN	3	3	1
	N4AEL	PRN	4	3	3
	R4AEL	PRN	3	3	2
TOYOTA LEXUS	A43DE	PRN	4	3	1
	A140E	PRN	4	3	1
	A240E	PRN	4	3	1
	A340E	PRN	4	3	1
	A540E	PRN	4	4	1
SPRINT/GEO/SUZUKI	A130EAW/MX17	PRN	3	2	1
GEO/ISUZU	AW4/30-40LE/30-80LE	PRN	4	3	1
RENAULT	MB/MJ/ML	PRN	3	3	3

Use the charts to see if the unit you have with wrong gear starts is in "Fail" or "No Power" mode. If so, you are probably looking for an electrical problem. If you have gears other than what is shown on this chart, you probably have a valve body or solenoid problem.

Technical Service Bulletin # **ATRATB221** Date: **940101**

A/T - Slipping/Vehicle Does Not Move After Rebuild

1994
Technical Bulletin # 221

^ Transmission: G4A-EL/4EAT
^ Subject: No Movement
^ Application: Ford/Mazda

G4A-EL/4EAT

No movement

A no movement condition can be caused by using the wrong pump drive shaft.

The shaft should stick out of the turbine shaft approximately 1/2".

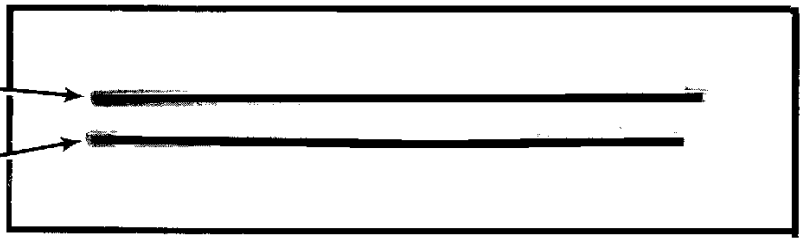

* • The shaft for the G4A-EL/4EAT measures 14 5/16".

• The shaft for the F4A-EL/F4EAT measures 13 9/16".

* This also includes the G4A-HL.

The pump drive shaft for an F4A-EL/F4EAT looks identical except it is 3/4" shorter.

Technical Service Bulletin # **ATRATB233** Date: **940101**

A/T - Low OR No Line Pressure Rise/Worn Throttle Cam

TECHNICAL BULLETIN # 233

TRANSMISSION: 4EAT/G4A-EL, G4A-HL

SUBJECT: Worn throttle cam

APPLICATION: Ford, Mazda

DATE: Jan 1994

4EAT/G4A-EL, G4A-HL

Low/No line rise Worn throttle cam

Transmission	Cam ID	Cam Part #	Plunger Part #
4EAT/G4A-EL	E	FU01-21-369A	FU01-21-150H
G4A-HL	H	FU50-21-271A	FU50-21-150B

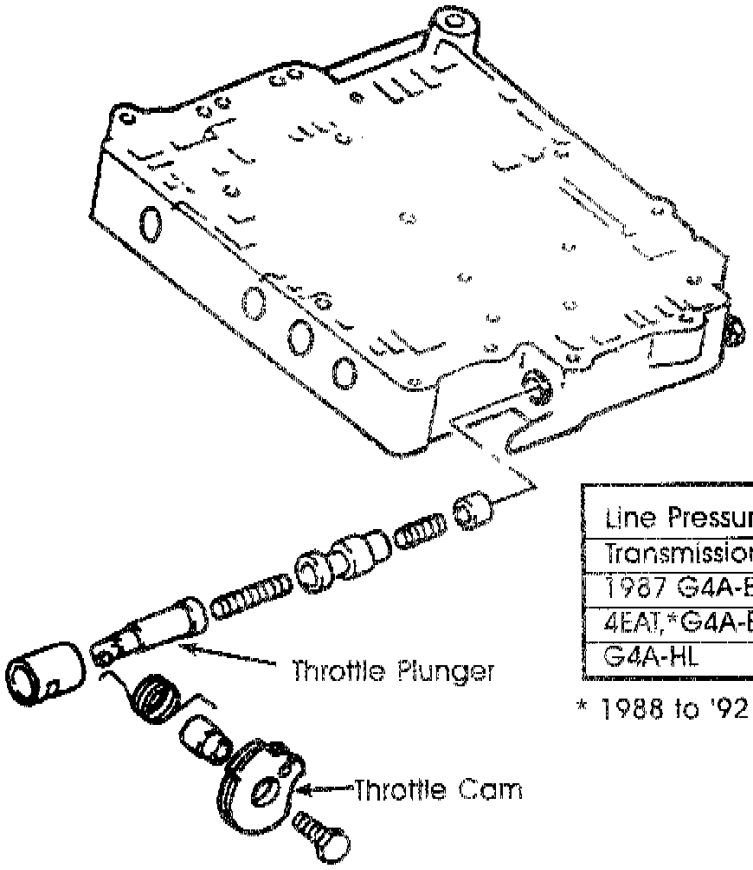

Line Pressure Specifications in Drive (PSI)		
Transmission	at an idle	at a stall
1987 G4A-EL	47-71	127-151
4EAT,*G4A-EL	51-63	127-151
G4A-HL	51-71	142-178

* 1988 to '92

NOTE: Due to the availability of these parts, you may want to order them now so you have them when you need them.

A low (or no) line rise condition can be caused by a worn throttle cam.

In some cases, the throttle plunger will also need replacing. Replacement parts can be purchased at your local Mazda dealer.

Note

Due to the availability of these parts, you may want to order them now so you have them when you need them.

Technical Service Bulletin # **ATRATB237** Date: **940101**

A/T - 4EAT, G4A-EL Engine Stalls In Drive

TECHNICAL BULLETIN # 237

TRANSMISSION: 4EAT, G4A-EL

SUBJECT: Stalls the engine

APPLICATION: Ford, Mazda

DATE: Jan 1994

Ford - 4EAT, Mazda - G4A-EL Stalls the engine in drive

1993 Ford Probe L4-121 2.0L DOHC VIN A MFI

A condition of stalling the engine in drive can be caused by a cracked mass airflow snorkel tube. When the gear selector is moved to a drive range, the engine will tilt toward the rear. When this happens, a snorkel tube that is cracked will allow air to bypass the mass airflow sensor which then stalls the engine.

WARNING

Do not be fooled into thinking that the torque converter clutch is being applied. Always check the snorkel tube before working on the transmission.

Technical Service Bulletin # **ATRATB244** Date: **940101**

A/T - Reverse Piston Return Spring Revised

TECHNICAL BULLETIN # 244

TRANSMISSION: G4A-EL, G4A-HL, 4EAT

SUBJECT: Reverse piston return spring

APPLICATION: Ford, Mazda

DATE: Jan 1994

G4A-EL, G4A-HL and 4EAT
Reverse Piston Return Spring

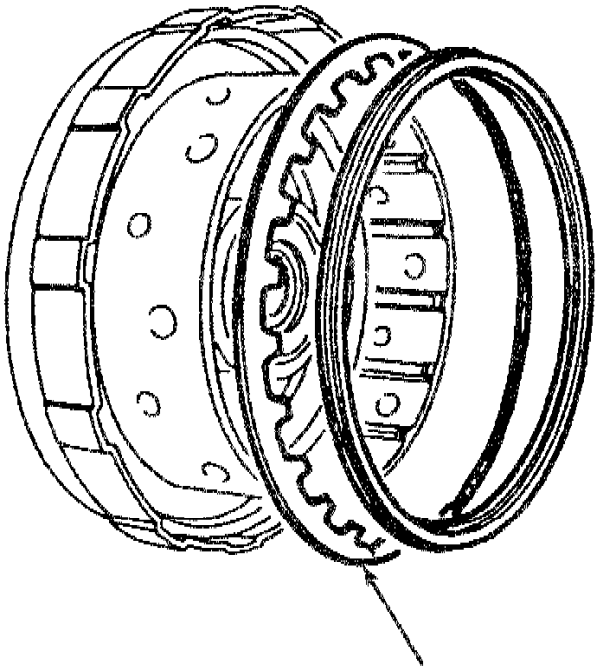

Old spring thickness .035"
New spring thickness .065"
New spring part number FU9A-19-551

It is not uncommon to find a broken return spring for the reverse drum during teardown (Figure 1). Mazda has recently upgraded this spring to a thicker design (Mazda part number FU9A-19-551). The first design spring measured .035" in thickness while the second design spring measures .065".

The second design spring will retro-fit all years of G4A-EL, G4A-HL and 4EAT transaxles.

Note

Some units use one return spring while others use two springs stacked together. It is important to note that due to the extra thickness of the later spring you can install only one spring into the reverse drum.

Technical Service Bulletin # **ATRATB253** Date: **940101**

A/T - G4AEL/4EAT DTC 60, 61, 62, or 63/Pinched Wires

TECHNICAL BULLETIN # 253

TRANSMISSION: G4AEL/4EAT

SUBJECT: Pinched solenoid wires

APPLICATION: Ford, Mazda

DATE: Jan 1994

G4AEL / 4EAT Pinched Solenoid Wires

The following codes can be caused by one or more of the solenoid wires being pinched between the valve body and the case.

60 - Shorted or open 1-2 shift solenoid
61 - Shorted or open 2-3 shift solenoid
62 - Shorted or open 3-4 shift solenoid
63 - Shorted or open look-up solenoid

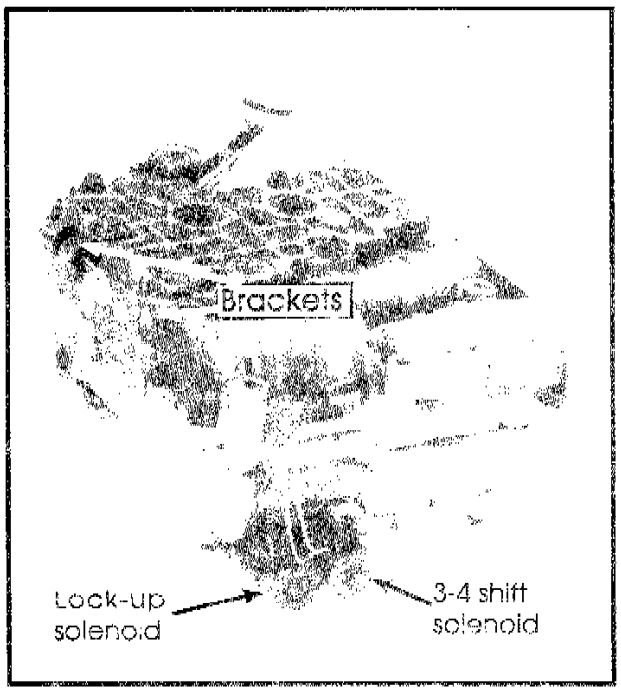
Brackets
Lock-up solenoid
3-4 shift solenoid

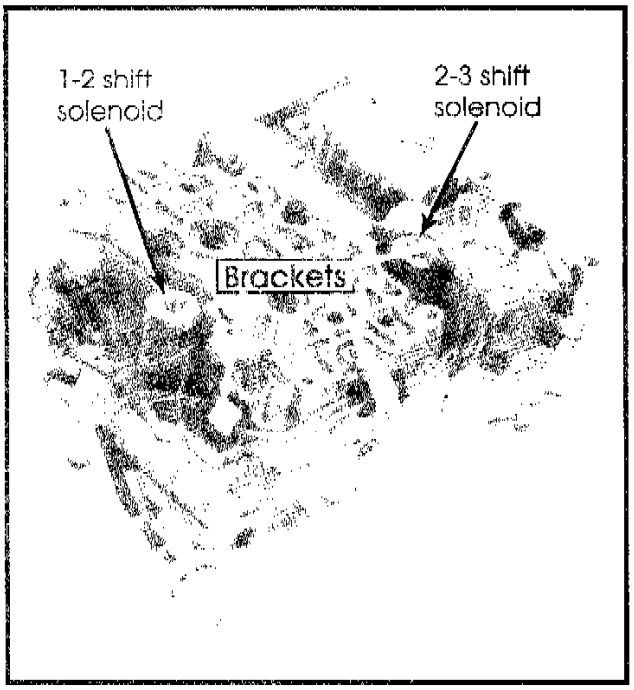
1-2 shift solenoid
2-3 shift solenoid
Brackets

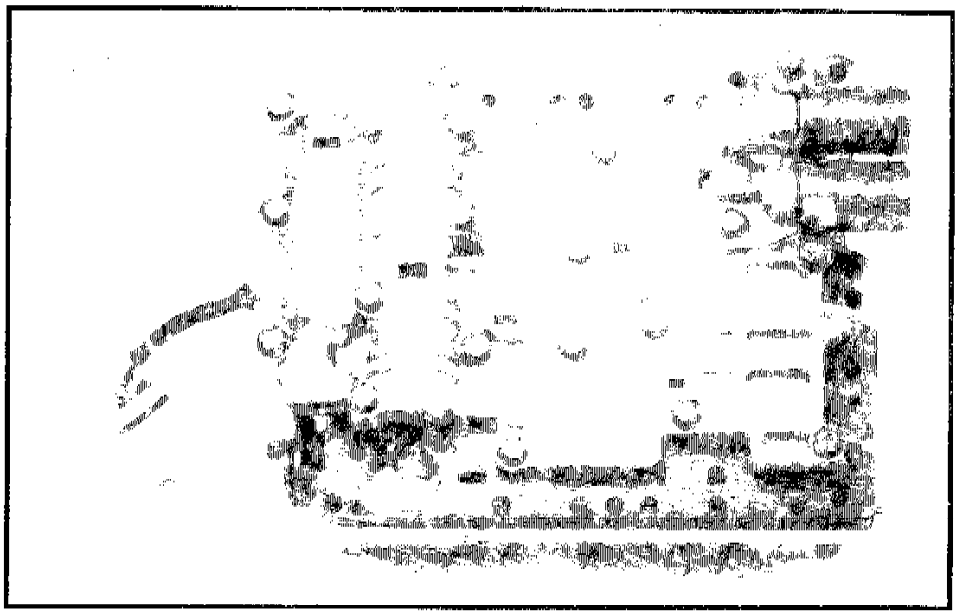

NOTE: The solenoid wires are not exposed to the valve body mounting surface.

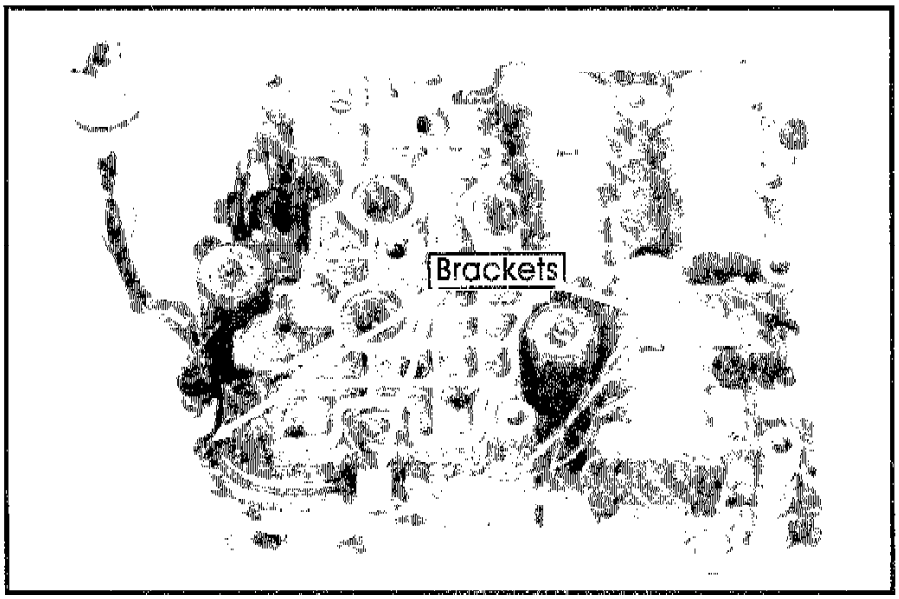

It can be very difficult using the original bracket locations to route the wires in a safe area of the valve body. The following figures show the proper way to route the wires using the original brackets. Using this method, it is impossible to pinch the solenoid wires between the valve body and case.

Note

Solenoid resistance is 13-27 ohms.

Technical Service Bulletin # **ATRATB294** Date: **950101**

A/T - Drive Axle and Wheel Lug Nut Torque Specifications

TECHNICAL BULLETIN # 294

DATE: 1995

TRANSMISSION: General

SUBJECT: Drive Axle and Wheel Lug Nut Torque

APPLICATION: Service information

AXLE AND LUG NUT SERVICE INFORMATION

It is critical to tighten the axle and lug nuts to factory specifications.

Important:
The following charts contain both DRIVE AXLE NUT and WHEEL LUG NUT tightening values. Make certain the correct tightening torque is used by referring to the chart headings.

WARNING
If the factory tightening specifications are not followed, bearing life will be shortened or mechanical loads will not be spread evenly.

^ Install axle(s) and wheel(s).

^ Install nuts and hand tighten.

^ Lower vehicle until wheels begin to touch the ground.

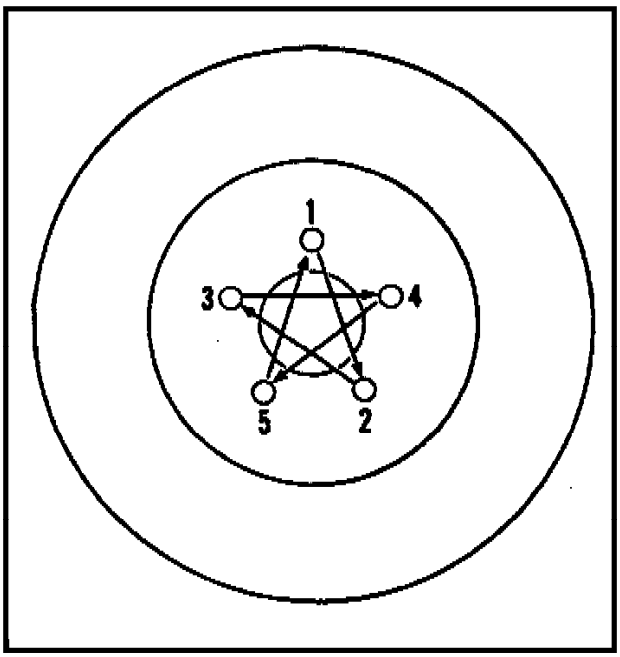

Figure 1 Tighten the lug nuts in star pattern.

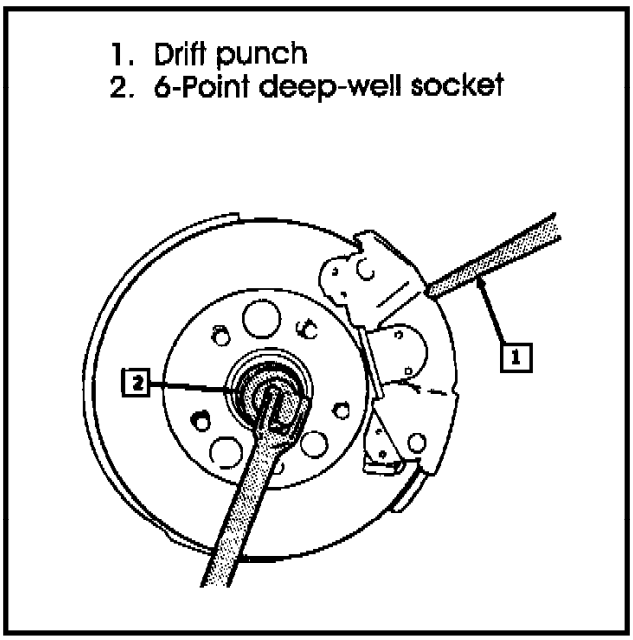

Figure 2 Tighten the axle nut with the wheels on the ground or rotor blocked (some models).

^ Using figures one and two, tighten nuts to specifications illustrated in the following tables.

Note

Some vehicles use torque-to-yield bolts. These bolts should be tightened an additional amount beyond the listed torque specification. The extra amount is listed in degrees.

Axle Nut and Lug Nut Tightening Specifications

Application		AXLE NUT CV TYPE Ft. Lbs. (N.m.)	Lug Nuts Ft. Lbs. (N.m.)
Acura			
86-94	Integra	134 (182)	80 (110)
86-91	Legend & Vigor	184 (250)	80 (110)
92-94	Legend	240 (325)	80 (110)
AMC			
84-87	Alliance & Encore	154 (210)	60 (80)
Audi			
88-94	80/90[1] except Quattro		
	1-piece wheel bearing housing[1]	195 (265)	65 (88)
	2-piece wheel bearing housing[1]	90 (120) + 90°	65 (88)
88-94	80/90 Quattro & 100/200	150 (200) + 90°	80 (110)
81-87	4000 Except Turbo Quattro/Coupe	170 (230)	65 (88)
81-87	4000 Turbo Quattro/Coupe	202 (275)	65 (88)
81-88	5000[1]	202 (275)	80 (110)
90-94	V8 Quattro[1]	150 (200) + 90°	65 (88)
Buick			
84-87	Century	185 (250)	100 (135)
88-92	Century	192 (260)	100 (135)
93	Century	103 (140) + 20°	100 (135)
94	Century	176 (240)	100 (135)
85-92	Electra & Park Avenue	107 (145)	100 (135)
93-94	Electra, LeSabre, Park Avenue	107 (145)	100 (135)
86-92	LeSabre	180 (245)	100 (135)
88-94	Regal	185 (250)	100 (135)
84-93	Riviera	185 (250)	100 (135)
84-86	Skyhawk	185 (250)	100 (135)
87-89	Skyhawk	192 (260)	100 (135)
84-92	Skylark & Somerset	185 (250)	100 (135)
93-94	Skylark & Somerset	192 (260)	100 (135)
Cadillac			
87-92	Allante	180 (245)	100 (135)
93-94	Allante, DeVille, Eldorado, Fleetwood, Seville	107 (145)	100 (135)
84-86	Cimarron	185 (250)	100 (135)

[1] = Replace nut

Application		AXLE NUT CV TYPE Ft. Lbs. (N.m.)	Lug Nuts Ft. Lbs. (N.m.)
Cadillac			
87-88	Cimarron	192 (260)	100 (135)
85-92	DeVille & Fleetwood	180 (245)	100 (135)
84-92	Eldorado & Seville	180 (245)	100 (135)
Chevrolet			
84-94	Except 93 Celebrity & Lumina APV	185-192 (250-260)	100 (135)
93	Celebrity & Lumina APV	103 (140) + 20°	100 (135)
Chrysler (Domestic)			
93-94	Concord & Premier	70-90 (250-260)	95 (130)
94-94	All others	180 (245)	95 (130)
Chrysler (Imports)			
83-94		150-190 (200-260)	Steel 55 (75) Aluminum 65-80 (90-110)
Daihatsu			
88-92		130-166 (177-226)	45-70 (60-95)
Dodge			
84-94	Except Intrepid	180 (245)	95 (130)
93-94	Intrepid	70-90 (95-122)	95 (130)
Eagle			
88-89	Medallion & Premier	185 (250)	Steel 65 (88) Aluminum 95 (130)
93-94	Vision	70-90 (95-122)	95 (130)
Ford			
88-94	Aspire & Festiva	116-174 (157-235)	70 (95)
84-90	Escore & EXP	180-200 (245-270)	90 (122)
91-94	Escort	174-235 (235-320)	90 (122)
89-94	Probe	174-235 (235(320)	75 (100)
86-94	Taurus	180-200 (245-270)	90 (122)
84-91	Tempo	180-200 (200-270)	90 (122)
92-94	Tempo	170-236 (230-320)	90 (122)
Geo			
93-94	Except Metro, Prizm, Sprint	137 (186)	75 (100)
89-94	Metro	130 (175) Stake nut	60 (80)
93-94	Prizm	160 (216)	75 (100)
85-87	Sprint	110-195(150-170) Stake nut	30(40)

Application		AXLE NUT CV TYPE Ft. Lbs. (N.m.)		Lug Nuts Ft. Lbs. (N.m.)
Honda				
84-90	Accord & Prelude[1]	135 (185) Stake nut		80 (110)
91-94	Accord & Prelude[1]	184 (250) Stake nut		80 (110)
84-94	Civic[1]	135 (185) Stake nut		80 (110)
Hyundai				
	All models	135 (185)	Steel	55 (110)
			Aluminum	65 (90)
Infiniti				
	G20	173-232 (235-315)		80 (110)
Isuzu				
	I-Mark, Impulse, Stylus	137 (186)	Steel	75 (100)
			Aluminum	85 (115)
Lexus				
90-91	ES250	137 (186)		75 (100)
92-94	ES300	217 (295)		75 (100)
Lincoln				
88-94	Continental	180-200 (245-270)		90 (122)
Mazda				
84-94	Except 88-94 MX-3, MX-6 & 626	120-175 (160-235) Stake nut		70 (95)
88-94	MX-3, MX-6 & 626	175-235 (235-320)		70 (95)
Mercury				
91-94	Capri & 88-89 Tracer	116-175 (157-235)		70 (95)
84-94	Except Capri & 88-89 Tracer	180-200 (245-270)		70 (95)
Mitsubishi				
84-94		150-190 (200-260)	Steel	55 (75)
			Aluminum	75 (100)
Nissan				
84-94	Altima, Maxima, Access, Stanza	175-230 (235-315)		80 (108)
84-86	Pulsar, Sentra	87-145 (120-195)		80 (108)
87-94	NX, Pulsar, Sentra	145-203 (200-275		80 (108)
Oldsmobile				
84-94	Except 93-94 Cutlass Ciera, Cutlass Cruiser, 94 Silhouette, Toronado, Trofeo, 88,98	185-192 (250-260)		100 (135)
93	Cutlass Ciera, Cutlass Cruiser	103 (140) + 20°		100 (135)
94	Cutlass Ciera, Cutlass Cruiser	175 (240)		100 (135)

Application		AXLE NUT CV TYPE Ft. Lbs. (N.m.)	Lug Nuts Ft. Lbs. (N.m.)
Oldsmobile (continued)			
94	Silhouette	103 (140) + 20°	100 (135)
84-85	Toronado	175 (240)	100 (135)
86-92	Toronado, Trofeo, 88	180 (245)	100 (135)
93-94	88,98	107 (145)	100 (135)
85-92	98	180 (245)	100 (135)
Peugeot			
		195 (265)	Not Available
Plymouth			
		180 (245)	95 (130)
Pontiac			
84-94	Except Bonneville, 94 Transport & 93-94 6000	185-192 (250-260)	100 (135)
87-92	Bonneville	180 (245)	100 (135)
93-94	Bonneville	180 (245)	100 (135)
94	Transport	103 (140) + 20°	100 (135)
93	6000	103 (140) + 20°	100 (135)
94	6000	175 (240)	100 (135)
Renault			
	Fuego, Sportwagon	185 (250)	60 (80)
Saab			
	900	215-225 (290-305)	75 (100)
	9000	215-225 (290-305)	85 (115)
Saturn			
		145 (200)	100 (135)
Sterling			
		215 (290)	50 (70)
Subaru			
84-94	Except 87-88 Justy, Legacy	145 (200) align to cotter pin within 30°	65 (90)
87-88	Justy	130 (180) align to cotter pin within 30°	65 (90)
90-94	Legacy	137 (185) align to cotter pin within 30°	65 (90)

Application		AXLE NUT CV TYPE Ft. Lbs. (N.m.)	Lug Nuts Ft. Lbs. (N.m.)
Suzuki			
	Swift	110-150 (150-200)	45 (60)
Toyota			
84-91	Camry, Corolla, Tercel	135 (185)	75 (100)
92-94	Camry	215 (295)	75 (100)
86-91	Celica	135 (185)	75 (100)
92-94	Celica	165 (225)	75 (100)
92-94	Corolla	160 (215)	75 (100)
92-94	Paseo, Tercel	150 (205)	75 (100)
VW			
84-92	Cabriolet, Corrado, Fox, Golf GTI, Jetta, Pickup, Quantum, Scirocco	175 (235) Use new nut	80 (110)
93-94	Corrado SLC, Golf, GTI, Jetta	195 (265) Use new nut	80 (110)
93	Euro Van	150 (200) Use new nut	80 (110)
90-95	Passat	195 (265) Use new nut	80 (110)
Volvo			
	850	110 (140) + 60°	80 (110)
Yugo			
		160 (215) Stake nut	65 (90)

Suzuki/ Toyota/ VW/ Volvo/ Yugo

Technical Service Bulletin # **ATRATB312** Date: **950101**

A/T - G4A-EL, 4EAT Engagement Problems

TECHNICAL BULLETIN # 312

TRANSMISSION: G4A-EL, 4EAT

SUBJECT: Engagement problems

APPLICATION: Ford, Mazda

DATE: January 1995

G4A-EL, 4EAT Engagement Problems

- Bind up in Reverse
- Bind up in Drive
- Drives forward in Neutral
- Drives backward in Neutral
- Neutrals in Drive
- Neutrals in Reverse

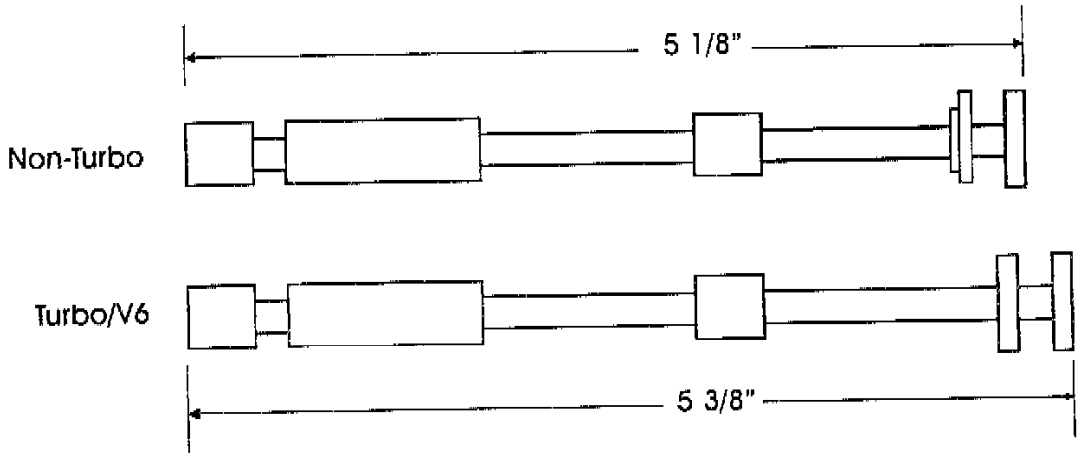

Figure 1

These symptoms may be caused by installing a manual valve of the wrong length. Complete valve body assemblies can be installed in any application, however, the manual valve must match the case. Non-turbo cases use a manual valve length of 5 1/8 inches, the turbo and V-6 cases use a manual valve that is 5 3/8 inches in length (figure 1).

Technical Service Bulletin # **ATRATB350** Date: **960101**

A/T - G4A-EL 3-4 Shift Hunt

Date: 1996

Technical Bulletin # 350

Transmission:
G4A-EL

Subject:
3-4 shift hunt

Application:
Ford, Mazda

G4A-EL
3-4 Shift Hunt

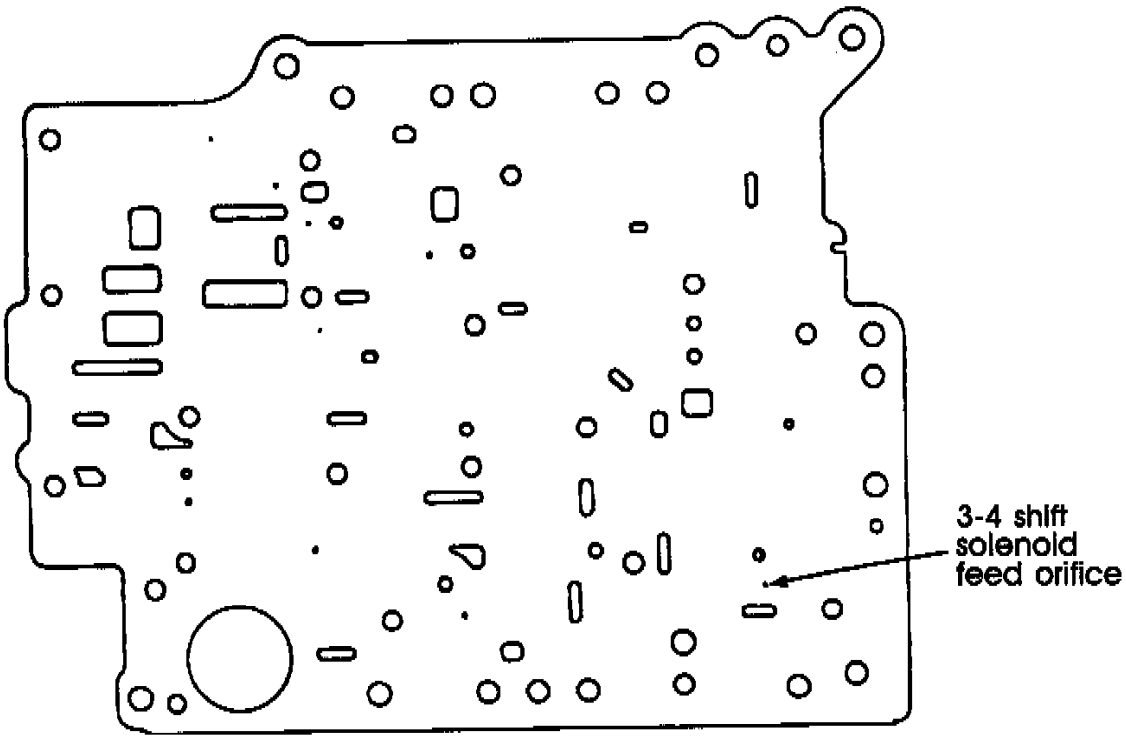

This condition may be caused by failure in the 3-4 shift solenoid hydraulic circuit. Monitor the shift solenoid signals from the computer. If the 1-2 shift solenoid is the only solenoid being cycled on and off during the 3-4 shift hunt the 3-4 shift solenoid feed circuit has failed.

This condition is commonly caused by debris which has plugged the 3-4 shift solenoid feed orifice.

NOTE:
This condition may also be caused by a leak in the 3-4 shift solenoid or the end plug of the 3-4 shift valve.

Technical Service Bulletin # **ATRATB364** Date: **960101**

A/T - G4A-EL & F4EAT Trouble Code Identification

Date: 1996

Technical Bulletin # 364

Transmission:
G4A-EL & F4EAT

Subject:
Code 6 or 60 Present

Application:
Ford & Mazda

G4A-EL and F4EAT Code Identification
Code 6 or 60 Present

Care should be taken when Retrieving codes through the on board diagnostics.

Code 6 is displayed as six short flashes (or beeps). Code 60 is displayed as six long flashes (or beeps).

Service Code Number 1988 - present		
Code No.	**Location of Malfunction**	**Hold Indicator Lamp Flash Cycle**
6	Vehicle speed sensor 1 (revolution sensor)	
12	Throttle position sensor	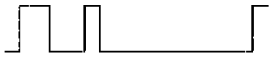
60	Solenoid valve (shift solenoid A)	

Use the chart to help prevent a misdiagnosis, see the chart.

Tip:
Disconnect the throttle position sensor. Make sure code 12 is displayed. Use the pattern for code 12 to help identify codes 6 or 60.

Technical Service Bulletin # **ATRATB8748** Date: **870801**

A/T - Slipping or No-Shift/Metal Sealing Rings

TSB 87-48 (Aug)

SUBJECT: Metal sealing rings

1993 Ford Probe L4-121 2.0L DOHC VIN A MFI

Various Units

PROBLEM: Slipping, or sometimes no-shift

POSSIBLE SOLUTION: Sealing rings could be under-size.

1. Always inspect rings as outlined in SIL 84-29

Figure I

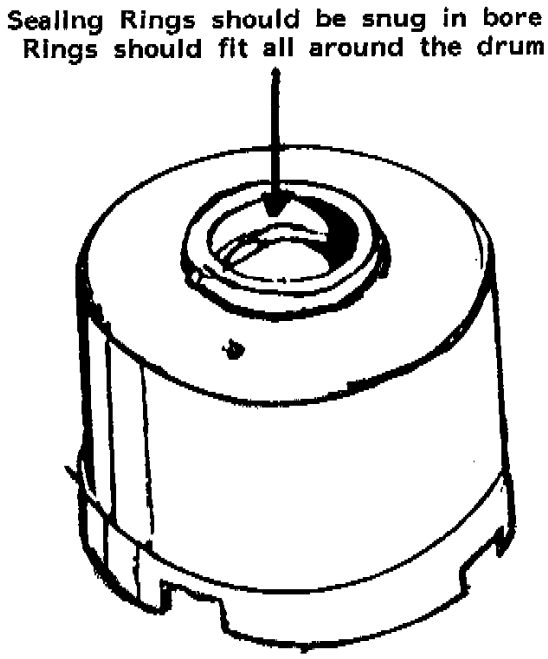

Figure 2

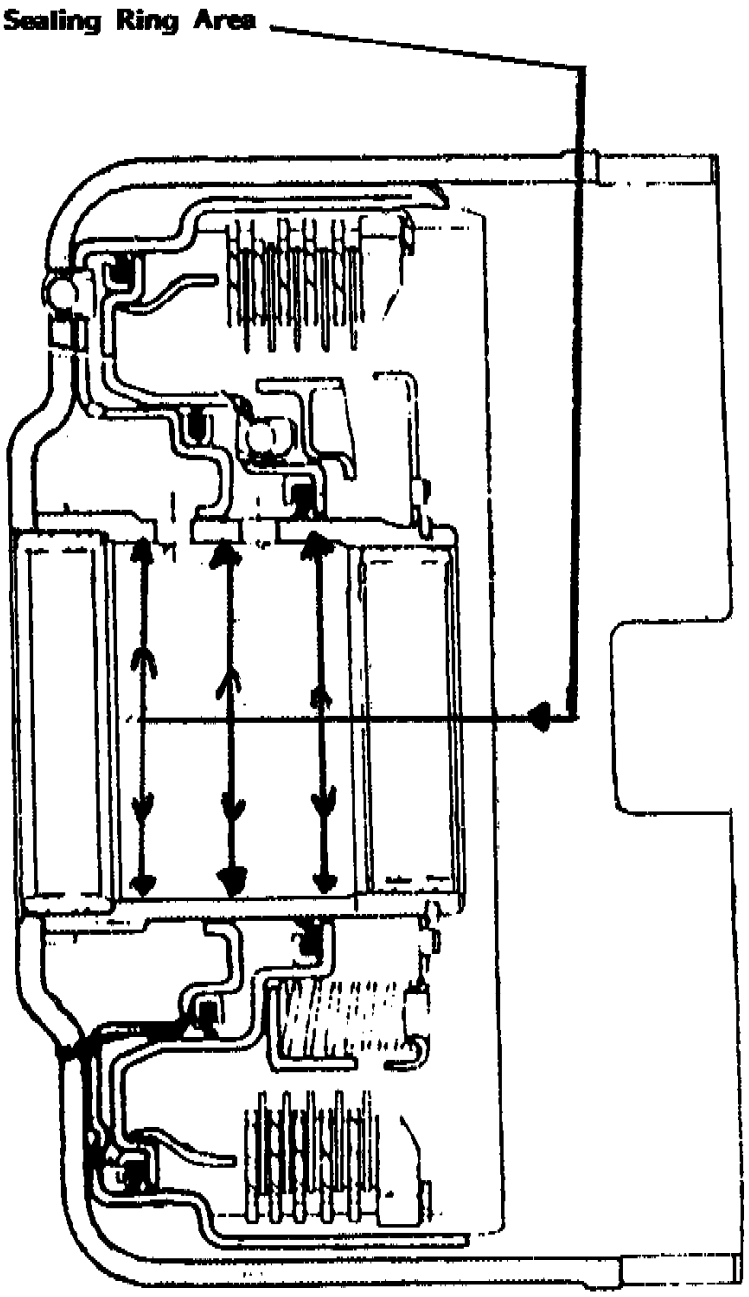

2. Place ring in bore of drum where they will be running. (See Figures 1 & 2)

3. Sealing rings should be snug in bore; rings should fit all around the drum. (drum could be out-of-round)

4. Air check all drums. (Use 30 PSI air pressure only.) If air escapes you have leaks -- better find now, than later. This represents lost clutch pressure, and could result in soft application and burned friction material.

5. Following these steps will help you save money, plus help you build better units.

Technical Service Bulletin # **ATRATB8754** Date: **870901**

A/T - Front Bushing Wear

TSB 87-54 (Sept)

SUBJECT: ALL AUTOMATICS

PROBLEM: Front Bushing Wear

CAUSE:
When diagnosing front pump bushing wear, the cause may be:

1. Excessive CONVERTER HUB RUN-OUT. This may, or may not be due to a faulty torque converter.

Figure 1

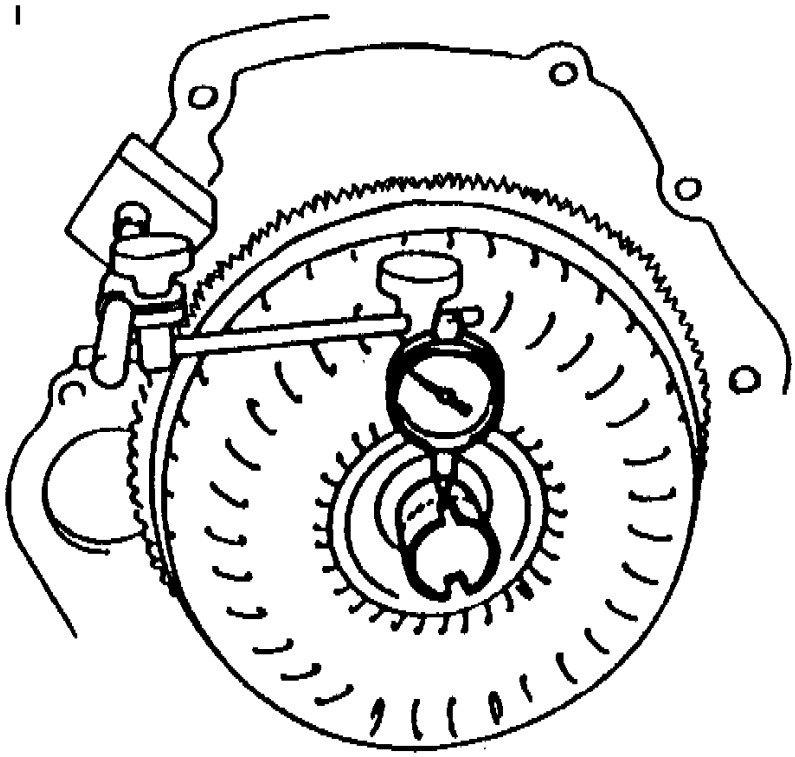

The torque converter can be checked visually, and with a dial indicator. (See Figure 1) Hub run-out should not exceed .010".

2. BROKEN, BENT OR CRACKED FLYWHEELS can also cause run-out. If the torque-converter-to-flywheel bolts have been loose, the flywheel holes can become egg-shaped, or the torque converter pads may wear into the flywheel, causing run-out.

Figure 2

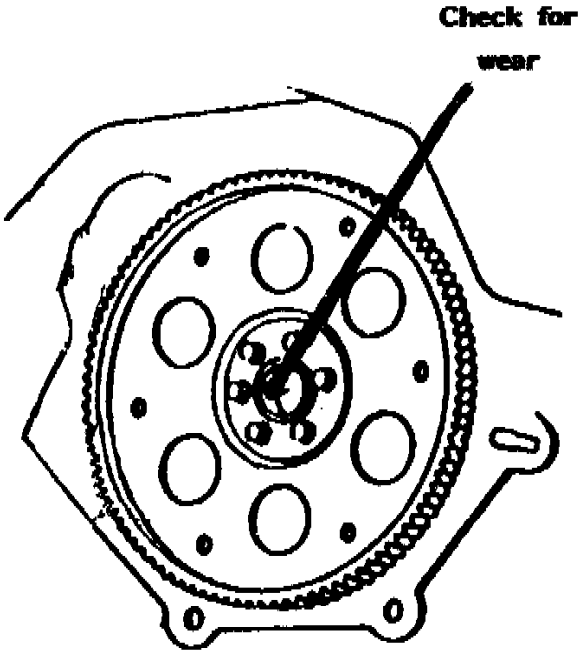

3. Another possibility is WEAR IN THE CRANKSHAFT, where it supports the torque converter pilot.(See Figure 2)

Often the crankshaft is only worn in a small area where the torque converter pilot has been against it.

If only a portion of the crankshaft is worn, rotate the crankshaft until the worn area is at 12:00 o'clock.

When the torque converter is pushed forward into the crankshaft, the torque converter pilot will bottom on a good portion, and should center properly.

Technical Service Bulletin # **ATRATB8923** Date: **890801**

A/T - Math Formulas Part I

1993 Ford Probe L4-121 2.0L DOHC VIN A MFI

TSB: 89-23 (Aug)

SUBJECT:
TRANSMISSION MATH FORMULAS (Your most valuable tool)

Transmission math formulas are not reserved exclusively for engineers. Understanding some basic mathematical formulas can be one of your most valuable tools.

The following information contained in this bulletin will discuss various basic formulas dealing with:

1. Shift Speed
2. Pressure
3. Speedometer ratios

Take the time, now, to understand these relatively simple concepts.

You will be saving yourself many problems, and considerable frustration, and also dollars, in the future.

Shift Speed and Pressure

SHIFT SPEED AND PRESSURE

To figure the area of a circle (valve or servo):

Radius (which is 1/2 the diameter) x Radius x 3.14159 = Area

EXAMPLE: A 1" diameter circle has a radius of 0.5"

0.5 x 0.5 x 3.14159 = 0.785

Therefore a 1" diameter circle has an Area of 0.785 sq. inches

Pressure x Area = Force

EXAMPLE: 100 psi line pressure, on a servo with an area of 2 square inches = force

So, 100 psi line pressure x 2 sq in = 200 pounds of force.

Force divided by Area = Pressure

EXAMPLE: 200 lbs divided by 2" = 100 psi

Force divided by Pressure = Area

EXAMPLE: 200 lbs divided by 100 psi = 2 inches

THINGS WE CAN DO WITH THESE FORMULAS:

EXAMPLE: A 700 R4 has 62 psi of line pressure at Idle.
The PR spring weighs 6.5 lbs

The tip (reaction end) of the PR valve has a diameter of 0.365" (0.365 divided by 2 = 0.1825 radius) 0.1825 x 0.1825 x 3.14159 = 0.1046" area

We want 75 psi of line pressure at Idle

First, let's see if those numbers add up, using: Pressure x Area = Force

62 psi x 0.1046 = 6.48, or 6 1/2 lb PR Spring

We want 75 psi:
Pressure x Area = Force (Spring) 75 psi x 0.1046 = 7.85 lb spring

What if we put in an 8 lb Spring? Force divided by Area = Pressure

8 lbs divided by 0.1046 = 76.48 or 76 1/2 line pressure

Now, let's look at RATIO.

Ratio is the relationship in quantity, amount or size, between two or more things.

In our example ratio is: How many psi each pound of spring will add.

Pressure divided by Force = Ratio

EXAMPLE: 62 psi divided by 6.5 lbs = 9.5 ratio Each pound of spring will increase pressure 9.5 psi

Force x Ratio = Pressure

EXAMPLE: 6.5 lbs x 9.5 = 61.75 or 62 psi

(Let's add 1 lb of spring, and see if we get 9.5 more psi.)

Force x Ratio = Pressure

EXAMPLE: 7.5 lbs x 9.5 = 71.25

New pressure Old pressure = Pressure difference

71.25 minus 61.75 = 9.5 psi change (by adding 1 lb of spring)

Once you know the ratio, a lot can be determined. Pressure divided by Ratio = Force

62 psi (actually 61.75) divided by 9.5 = 6.5 lb spring

The ratio never changes. This means that if I know that line pressure is 55 psi at idle, in a 700 R4, the the PR spring must be 5.78 lbs.

Pressure divided by Ratio = Force

So, 55 psi divided by 9.5 = 5.78 lbs.

Now, let's look at a math formula for shift speeds.

Suppose we had shift speeds of 15 mph and 20 mph, for the 1-2 & 2-3 shifts on a transmission. 20 mph may be too early for the 2-3 shift. If we adjust TV modulator, we will move both shifts. We don't want to do that because the 1-2 shift is fine, so let's work with just the 2-3 shift spring.

EXAMPLE: Original spring divided by Original MPH = Ratio

As, 4 lbs divided by 25mph = 0.2

Ratio x Desired MPH = New Spring

0.2 x 25 mph = 5 lb spring

A 5 lb spring will raise the shift on this transmission to 25 mph.

All you need to know is -- Where is it shifting now (at MINIMUM throttle) and what does the spring weigh.

This formula will get you very close, but may be a "tad" off, because we are not accounting for TV pressure helping the spring. This is why you want to check it at minimum throttle, so TV has the least effect.

Speedometer Ratios

Finally, let's look at speedometer ratios.

Suppose we put an exchange transmission in a car, and now the speedometer is off, because the speedometer drive gear has a different tooth count. What do we have to do to the driven gear to correct it?

Let's say the old drive gear had 7 teeth and the old driven gear had 21 teeth. The exchange unit had 8 teeth on the drive gear.

Old Drive Gear divided by the New Drive Gear = Ratio

7 teeth divided by 8 teeth = 0.875

Old Driven Gear divided by Ratio = New Driven Gear

21 teeth divided by 0.875 = 24 teeth

A 24 tooth driven gear will correct the speedometer error.

Let's do one more speedometer change. This time the old drive is 9, and the new drive is 10. The old driven gear is still 21.

Old Drive Gear divided by New Drive Gear = Ratio

9 tooth divided by 10 tooth = 0.9

Old Driven Gear divided by Ratio = New Driven Gear

21 tooth divided by 0.9 = 23.33 teeth

We can't get a 23.3 tooth count so we round it off to 23 teeth. Now the speedometer will be close, but not exact, because we had to round off the number.

Technical Service Bulletin # **ATRATB8927** Date: **890901**

A/T - Twenty Steps To Successful Repairs

TSB 89-27 (Sept)

SUBJECT: TWENTY STEPS TO SUCCESSFUL TRANSMISSION REPAIR

1. As you start work on a transmission, read your ATRA bulletins pertaining to that transmission. (If you do this every time, before you know it you'll have the bulletins memorized.)
2. Clean the entire transmission, including the valve body.
3. Check pumps, valve bodies, and cases for warpage.
4. Flat file pumps, valve bodies, and cases. (Just a few strokes with the file to knock off high spots and handle burrs.)
5. Check all pump gear clearances.
6. Check planet pinion endplay and side to side motion.
7. Soak all planet assemblies.
8. Soak all friction material for 15-30 minutes.
9. Sand, tumble, or replace all steel plates.
10. Re-surface all drums on which a band rides.
11. Replace all rotating oi1 control rings.
12. Check all oil control rings, and rubber products in their bores for proper fit.
13. Replace all major support bushings and bushings that control lube oil.
14. Pre-lubricate all bushings and thrust washers.
15. Pre-lube pumps.
16. Pre-fill torque converters.
17. Use available manuals to find specifications.
18. Set correct clutch and band clearances
19. Take the time to set total unit endplay
20. Use a torque wrench on all pumps and valve bodies.

Technical Service Bulletin # **ATRATB8930** Date: **891001**

A/T - Math Part II

TSB: 89-30 (Oct)

SUBJECT: TRANSMISSION MATH - Part II

Planetary Gear Sets:

Knowing the gear ratios of an automatic transmission can come in handy at times -- especially when you're swapping transmission types or differentials. The problem is in trying to find a manual with the ratios listed. What do you do?

BREAK OUT THE CALCULATOR, AND FIGURE IT OUT.

When you figure the gear ratios for planetary gear sets, it is just like any other gear set. You divide the output gear by the input. Also, don't count the idler gear; planetaries are considered idler gears. Set them aside, their tooth count doesn't matter.

Figure 1

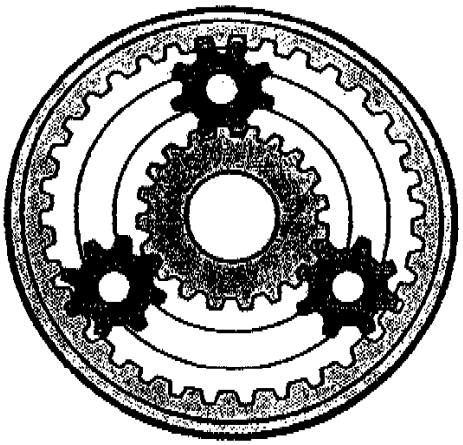

Now for the tricky part -- which gear do you consider the input, and which one the output? Figure 1 shows a planetary gear set with 34 teeth on the ring gear and 20 teeth on the Sun gear.

FOR GEAR REDUCTION, one of the gears is held stationary, and the other is used for the INPUT. THE TOOTH COUNT FOR THE OUTPUT GEAR IS THE SUM OF THE SUN GEAR AND THE RING GEAR, so if you are using the Sun gear for the input, then the ring gear + the Sun gear divided by the Sun gear = Ratio.

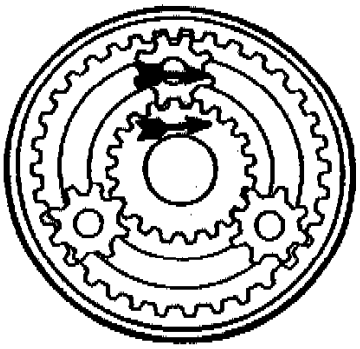

EXAMPLE: 34 + 20 divided by 20 = 2.7:1 This is how 1st gear on a THM 700 R4 is calculated. (See figure)

When the ring gear is used as the input, then the ring gear + the Sun gear divided by the ring gear = Ratio.

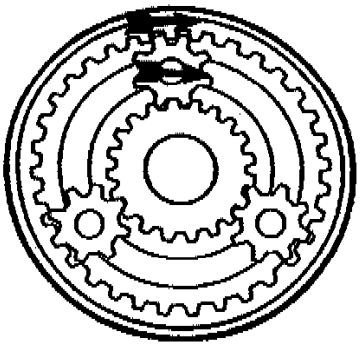

EXAMPLE: 34 + 20 divided by 34 = 1.58 This is now 2nd gear on a THM 350 is calculated. (See figure)

FOR OVERDRIVE, the sum of the ring gear + Sun gear is used for the input tooth count.

So, IF THE SUN GEAR IS HELD, then the ring gear divided by (ring gear + Sun gear) = Ratio

EXAMPLE: 34 divided by (34 + 20) = .63:1 Look familiar?

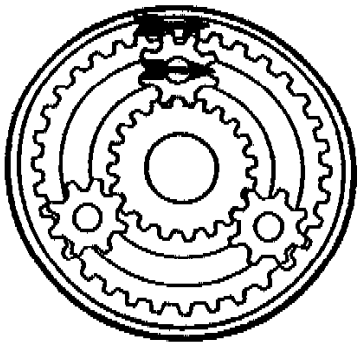

The A4LD, the THM 200-4R, the A-140E, the A-40D, the THM 325-4L are some of the units that use this method of getting overdrive. (See figure)

If the ring gear is held, then the Sun gear divided by (ring gear = Sun gear) = Ratio

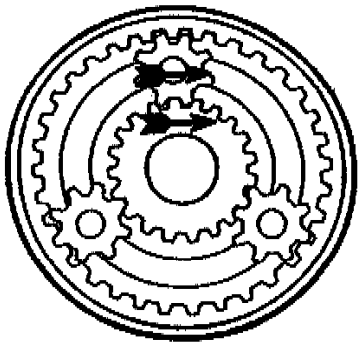

EXAMPLE: 20 divided by (34 + 20) = .37:1 (See figure)

REVERSE IS THE EASIEST - THE PLANET IS HELD.

The Sun gear is the input, and the ring gear is the output. The formula for this is: The ring gear divided by the Sun gear = Ratio.

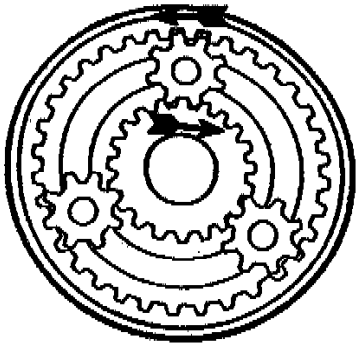

EXAMPLE: 34 divided by 20 = 1.7 (See figure)

Occasionally, the ring gear is used as the input, and the Sun gear as the output.

The formula for this is: The Sun gear divided by the ring gear = Ratio.

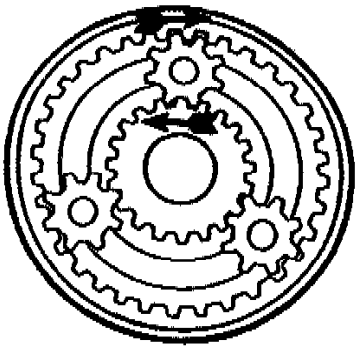

EXAMPLE: 20 divided by 34 = .59
(See figure)

Notice that the output is overdriven.

A transmission using this method must use another planetary gear set to reduce the output. The Mercedes W3A-040 is a good example of this

To get more than one gear forward and a reverse, requires multiple, or compound planetary gear sets.

Two of the most common of these are the SIMPSON GEAR SET, used in transmissions like the THM 350, the Ford C-4, and the TF 6 & 8, and the RAVIGNEAUX GEAR SET, found in transmissions such as the FMX, the AOD, and the T-35.

Figuring out all the ratios for these transmissions is a little tricky, so I'll give you the formulas, and let you figure out how these formulas were derived.

THE SIMPSON GEAR SET:

For this example I'll use a THM 200, which has 74 TEETH ON THE FRONT RING GEAR, 42 TEETH ON THE FRONT SUN GEAR, 30 TEETH ON THE REAR SUN GEAR, AND 62 TEETH ON THE REAR RING GEAR.

The formula for 1ST GEAR is: rear ring divided by rear Sun x front Sun plus front Sun + front ring divided by front ring.

EXAMPLE: On the THM 200, it would be:

62 divided by 30 x 42 + 42 + 74 divided by 74 = 2.74:1

SECOND GEAR is easy: Front Sun + front ring divided by front ring.

EXAMPLE: 42 + 74 divided by 74 = 1.57:1

THIRD GEAR is Direct Drive, or 1:1

REVERSE is rear ring divided by rear Sun

EXAMPLE: 62 divided by 30 = 2.06

THM 440-T4 (BACKWARDS SIMPSON):

The THM 440 T4 is sort of a backwards version of a Simpson gear set, and although it looks complicated, it really is very simple.

The front Sun gear has 26 teeth, while the rear Sun gear has 42. The front ring gear has 62 teeth, but keep in mind that it is part of the rear carrier, just as the rear ring gear is part of the front carrier, with a tooth count of 74.

As I said earlier, the THM 440 T4 is sort of a backwards version of a Simpson gear set, so in figuring the ratio for 1ST GEAR -- it is identical, except you substitute the words "front" and "rear" in the appropriate places. Front ring divided by front sun x rear Sun + rear Sun + rear ring divided by rear ring = Ratio

EXAMPLE: 62 divided by 26 x 42 + 42 + 74 divided by 74 = 2.92:1

2ND GEAR: Rear Sun + rear ring divided by rear ring

Example: 42 + 74 divided by 74 = 1.57:1

3RD GEAR: Direct Drive, or 1:1

4TH GEAR: Front ring divided by (front Sun + front ring = Ratio

EXAMPLE: 62 divided by (26 + 62) = .74:1

RAVIGNEAUX GEAR SET:

This is considered a compound gear set, and for this example I'll use an AOD, which has:

36 teeth on the front Sun gear

30 teeth on the rear Sun gear, and
72 teeth on the ring gear

The formula for first gear is: Ring gear divided by rear Sun gear = Ratio

EXAMPLE: 72 divided by 30 = 2.4:1

SECOND GEAR formula is: Rear Sun + front Sun divided by rear Sun x Ring divided by (Ring + front Sun)

EXAMPLE: (30 + 36) divided by 30 x 72 divided by (72 + 36) = Ratio 66 divided by 30 x 72 divided by 108 = 1.47

THIRD GEAR is Direct, or 1:1

FOURTH GEAR is: Ring gear divided by (ring gear + front Sun gear) = Ratio

EXAMPLE: 72 divided by (72 + 36) = .67:1

REVERSE on a Ford AOD is: Ring gear divided by front Sun gear.

EXAMPLE: 72 divided by 36 = 2:1

Technical Service Bulletin # **ATRATB9002006** Date: **900201**

A/T - Choosing the Right ATF

TRANSMISSION: ALL

BULLETIN: # 9002006

SUBJECT: Automatic Transmission Fluid

DATE: Feb 1990

AUTOMATIC TRANSMISSION FLUID

CHOOSING YOUR ATF

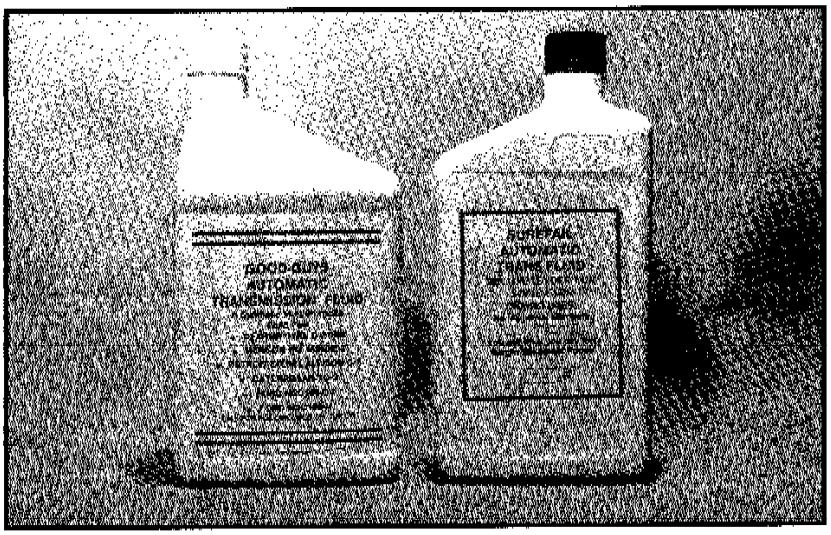

Figure 1

Different ATF's (Automatic Transmission Fluid) can have different frictional properties which can produce different shift characteristics. You may have already experienced problems like lock-up shudder, or squawks on shifts and have corrected them by changing the fluid. This alone tells, you that friction material and fluids are critical in today's cars.

MEETING THE O.E.M. SPECIFICATIONS

The first thing to consider when choosing an ATF is "Does it meet the O.E.M. specification?" ATF's wishing to be labeled as DEXRON II and/or MERCON must first meet the respective minimum requirements. It's important to note that even though the specification for DEXRON II and MERCON are currently very similar, THEY ARE NOT IDENTICAL. Also note, even fluids which meet the same specification may not be identical. One fluid may just meet a specification and, another may far surpass it. You should know what your fluids properties are! You can get that information from your fluid supplier.

EVALUATING YOUR FLUID

Ask your supplier to prove (certify) that the fluid meets O.E.M. specifications (MERCON OR DEXRON II). He will do that by supplying you with the license (certification) number issued to him by the O.E.M.

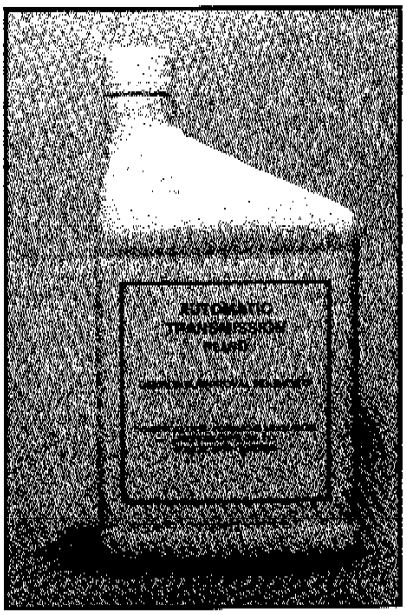

Figure 2

A DEXRON-II license number (sometimes referred to as a "D" number) will always start D-2. A typical DEXRON license number can be seen in Figure 2.

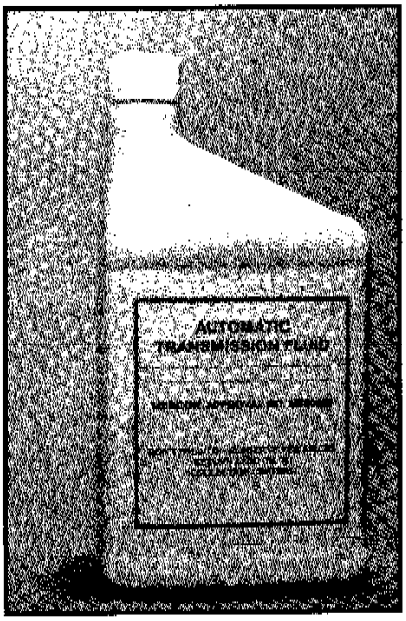

Figure 3

MERCON license numbers will be six digits starting with M as shown in Figure 3..

TRY TO MEET SEVERAL SPECIFICATIONS!

DEXRON II and MERCON have different minimum specifications, so a product that meets BOTH specifications may be better then those meeting only one spec. Meeting other specs, in addition to the first two can be an added benefit. If a fluid is licensed as DEXRON II AND MERCON as well as others like Allison C-4, or Caterpillar TO-2/TO-4, it means the fluid had to pass more tests and may be a better fluid.

Lastly, demand that the license numbers be placed on all your invoices especially if you buy in bulk. If your supplier is unwilling, it is very likely that they are supplying you an unlicensed fluid. Licensed suppliers are required to supply the license numbers to their customers as part of their agreement with the O.E.M.

OTHER THINGS TO CHECK

So now you've narrowed your choices down to a few suppliers that have O.E.M. license numbers. How do you compare two fluids that meet the same O.E.M. Spec.? Ask your supplier to give you the viscometrics on the fluid you buy.

An excellent "bench mark of the overall quality of a fluid is its viscosity at -40 degrees. This is measured in "centipoise" or "cPs". DEXRON II specification says viscosity will be no more then 50,000 cPs @ - 40 degrees. (Some poor fluids have tested at over 1,000,000 cPs) In general, the lower the number, the better the fluid.

Keep in mind that as the number goes down the price of the fluid usually goes up. (You get what you pay for) Most good fluids will average around

35,000 cPs. Hydrotreated (or Hydrocracked) fluids average around 20,000 cPs or less. (Hydrotreating is a refining process done to the base oil to clean out contaminants or impurities) Synthetic ATF's average 10,000 cPs or less, and some are as low as 5000 cPs. Viscosity at -40 degrees is a function of the base stock from which the ATF is made. A low number indicates a premium base oil OR an expensive refining process. (Hydrotreating)

FOR ADDITIONAL INFORMATION:

Transmission Digest August '89
Page 91 December '89 Page 51

BULLETIN RECAP

- Only use fluids with O.E.M. approvals.
- Try to get a fluid that meets more than one spec (e.g DEXRON II AND MERCON)
- Check the viscosity at -40 degrees. The lower the number the better.
- Avoid bargain basement fluids with no license numbers.

Technical Service Bulletin # **9557** Date: **950313**

Revised EGR Valve Wiring Harness

Article No.
95-5-7

03/13/95

- EGR VALVE - REVISED EGR VALVE WIRING HARNESS - VEHICLES WITH 2.5L ENGINE BUILT THROUGH 4/14/94 - SERVICE TIP
- EGR VALVE WIRING HARNESS - REVISED WIRING FOR EGR VALVE - VEHICLES WITH 2.5L ENGINE BUILT THROUGH 4/14/94 - SERVICE TIP

FORD:
1993-94 PROBE

ISSUE:
It it becomes necessary to replace the EGR valve, the EGR wiring harness may not connect with the new EGR valve due to a revised connector on the valve.

ACTION:
When replacing the EGR valve, install an EGR wire harness jumper to connect the vehicle harness to the new EGR valve.

PART NUMBER	PART NAME
F42Z-12B566-A	EGR Wiring Harness
F42Z-9D475-C	EGR Control Valve
F32Z-9D475-E	EGR Set (EGR Control Valve And EGR Wiring Harness)

Parts Block

OTHER APPLICABLE ARTICLES: NONE

WARRANTY STATUS: INFORMATION ONLY

OASIS CODES: 203200, 403000, 499000

Technical Service Bulletin # **93188** Date: **930901**

Engine - Vibration/Resonance At Idle

Article No.
93-18-8

09/01/93

- ENGINE TRANSMITS RESONANCE DURING IDLE - VEHICLES WITH 2.0L AND AUTOMATIC TRANSAXLE
- VIBRATION - RESONANCE DURING IDLE - VEHICLES WITH 2.0L ENGINE AND AUTOMATIC TRANSAXLE

FORD:

1993 Ford Probe L4-121 2.0L DOHC VIN A MFI

1993 PROBE

This TSB article is being republished in its entirety to correct the reference to "engine mount # 3" in Service Procedure Step 1 to read "Engine Mount # 2".

ISSUE:
An engine vibration and resonance may be transmitted into the vehicle's interior during idle because the # 3 engine mount is grounding out.

ACTION:
Check the clearance of the # 3 engine mount and, if necessary, shave off engine mount material which is causing the grounding out condition. Refer to the following service procedure.

INSPECTION - "QUICK CHECKS"

Before performing the repair procedure, do the following "Quick Checks" to determine if the vibration level can be effectively reduced.

1. Compare the vehicle's vibration and resonance to one or more equally equipped vehicles from the dealer inventory. Perform this comparison in DRIVE and REVERSE with the air conditioner on.

2. Perform a visual inspection of engine mount # 3 to verify that it is centered in the bracket. Refer to Step 2 in the service procedures of this article for details.

3. Check the base idle speed at normal operating temperature and, if necessary, set to 700-750 RPM per the service manual.

NOTE:
IF THE RESULTS INDICATE THE LEVEL OF VIBRATION TO BE EQUAL TO OTHER EQUALLY-EQUIPPED VEHICLES AND/OR ENGINE MOUNT # 3 IS CENTERED IN THE BRACKET, PERFORMING THE FOLLOWING REPAIR PROCEDURES WILL NOT REDUCE IDLE VIBRATION. REFER TO THE 1993 PROBE SERVICE MANUAL, SECTION 00-04, FOR ADDITIONAL NVH DIAGNOSIS INFORMATION.

SERVICE PROCEDURE

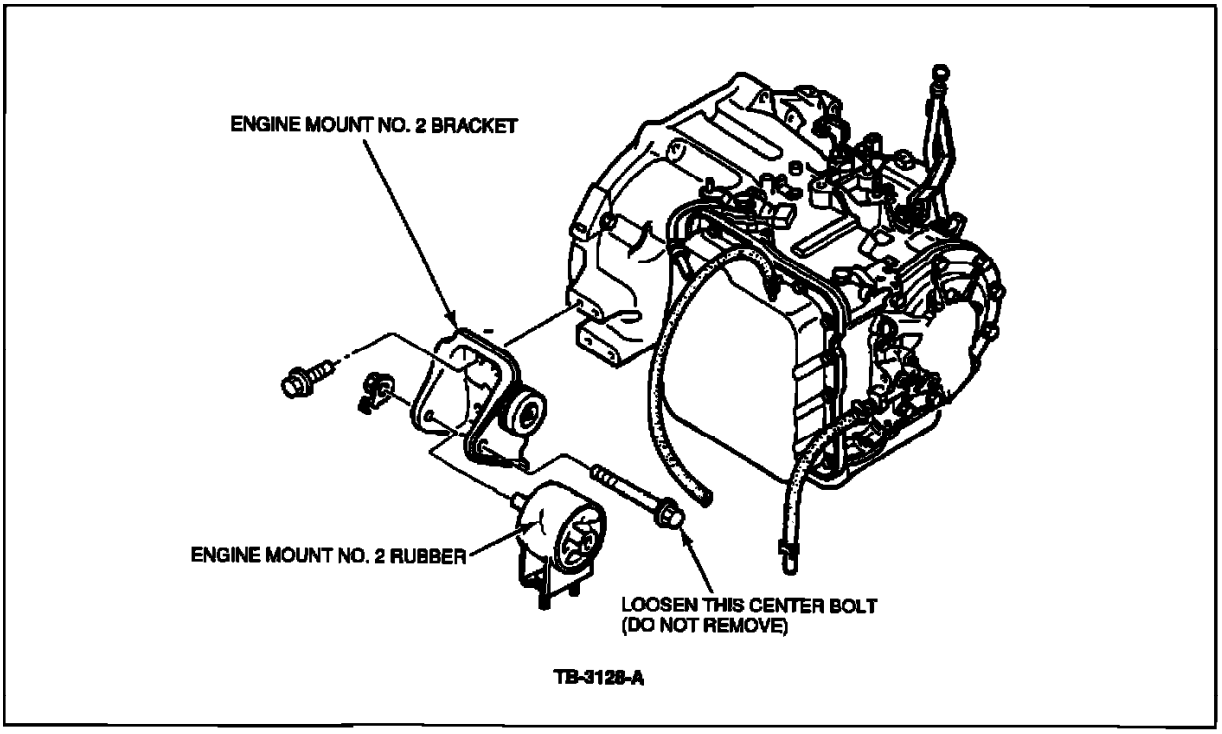

Figure 1

1. Place the vehicle on a hoist. Using a 17 mm socket, loosen (but do not remove) the center bolt that goes through engine mount # 2, Figure 1.

2. Check the clearance of engine mount # 3 against the mounting bracket. There should be clearance between the rubber mount and the bracket with the A/C load on and while in DRIVE or REVERSE. If the rubber mount contacts the bracket proceed as follows:

   a. Remove the rubber mount.

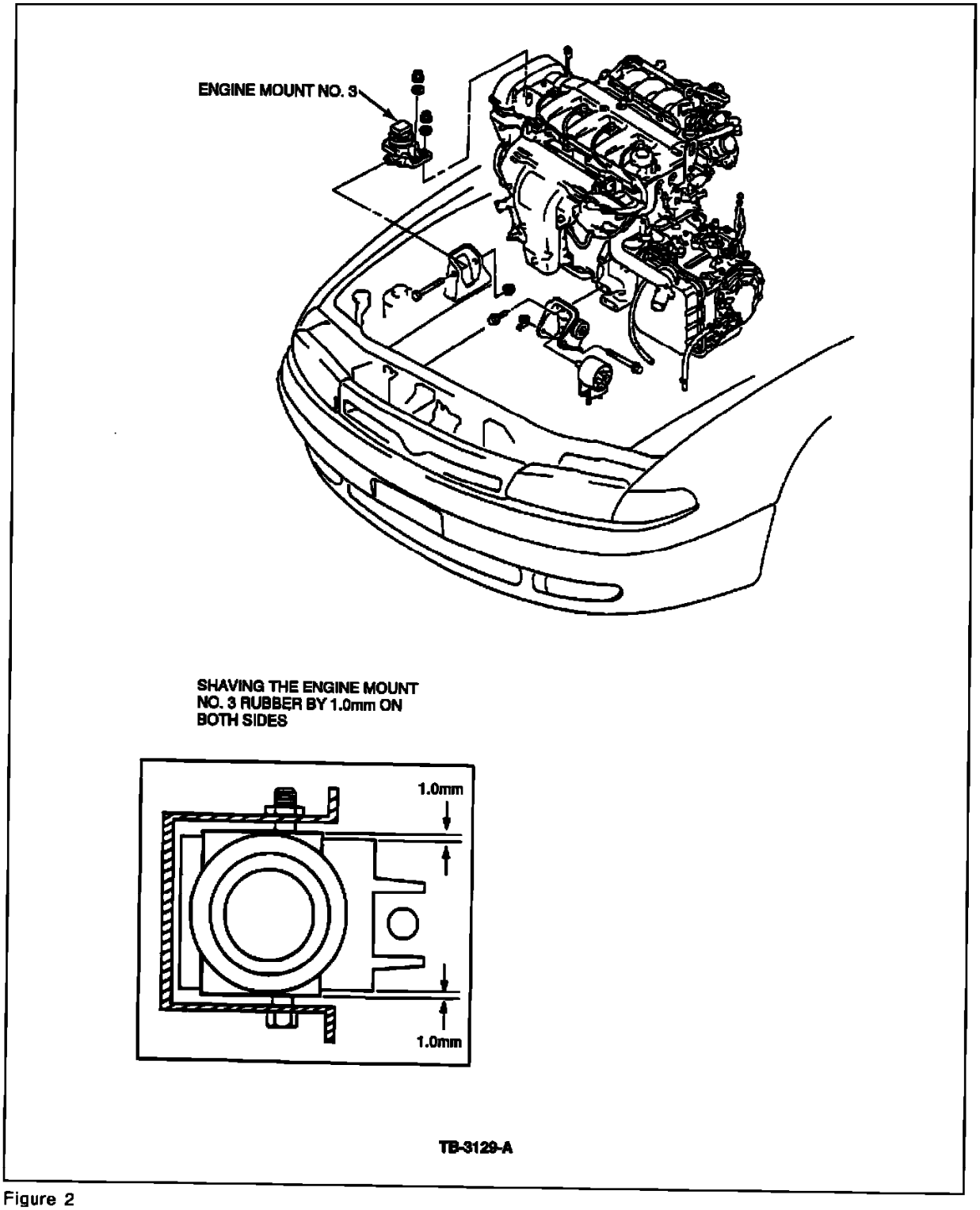

Figure 2

b. With a hacksaw or grinder, shave 1.0 mm of material off both sides of the rubber as shown in Figure 2.

3. Center the engine mount rubber as follows:

a. Remove the air cleaner.

b. Remove the ground connector on engine mount # 4.

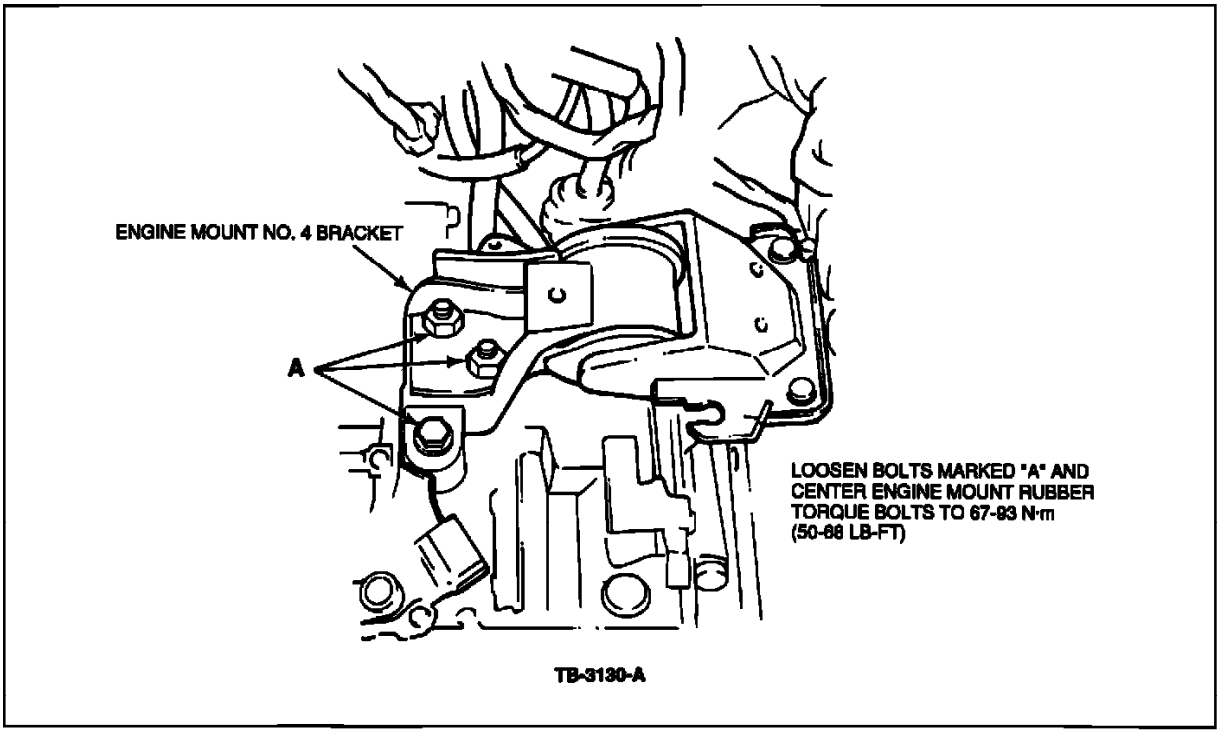

Figure 3

c. Loosen the three bolts marked "A" in Figure 3.

d. Use a pry bar to hold the bracket in place and to center the rubber between the bracket.

e. Retighten the three (3) bolts that were loosened in step "c" above to 50-68 lb.ft. (67-93 N-m).

f. Reconnect the ground connector.

g. Install the air cleaner.

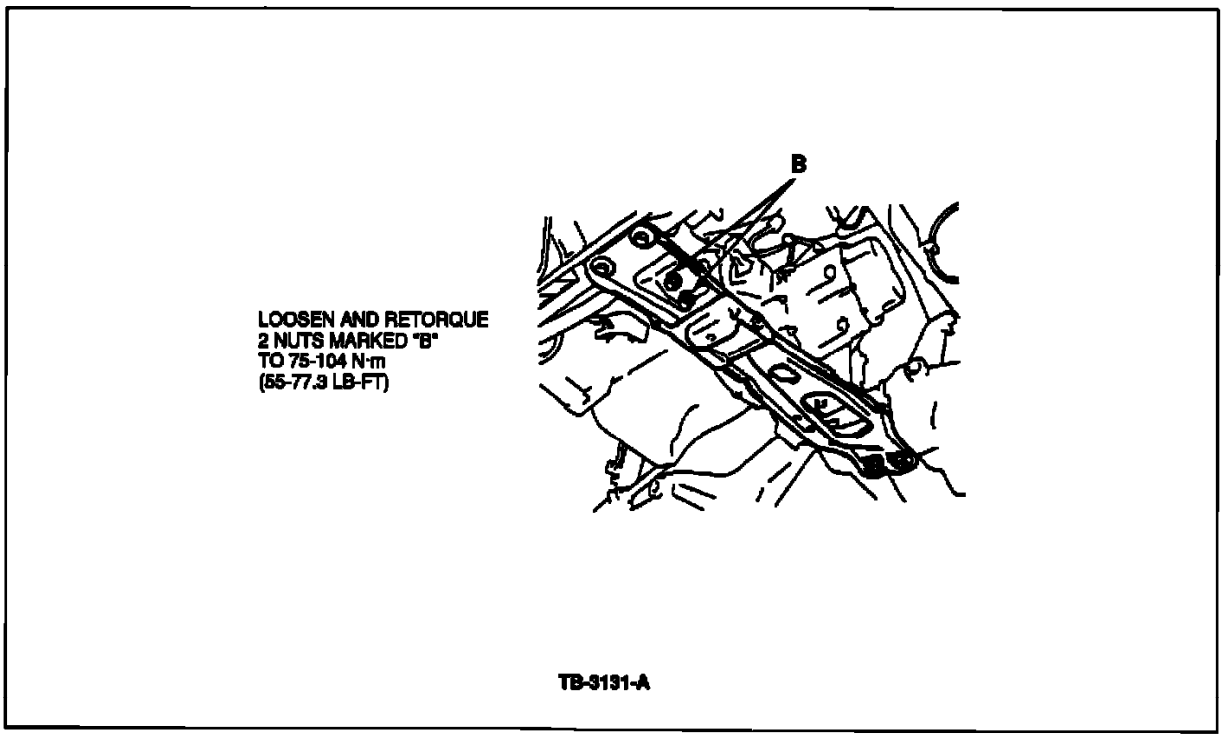

Figure 4

4. Loosen the two (2) nuts holding engine mount # 2 to the engine mount member, Figure 4.

a. Engine mount # 2 will move and align itself.

b. Retighten the two (2) nuts to 55-77 lb.ft. (75-104 N-m), Figure 4.

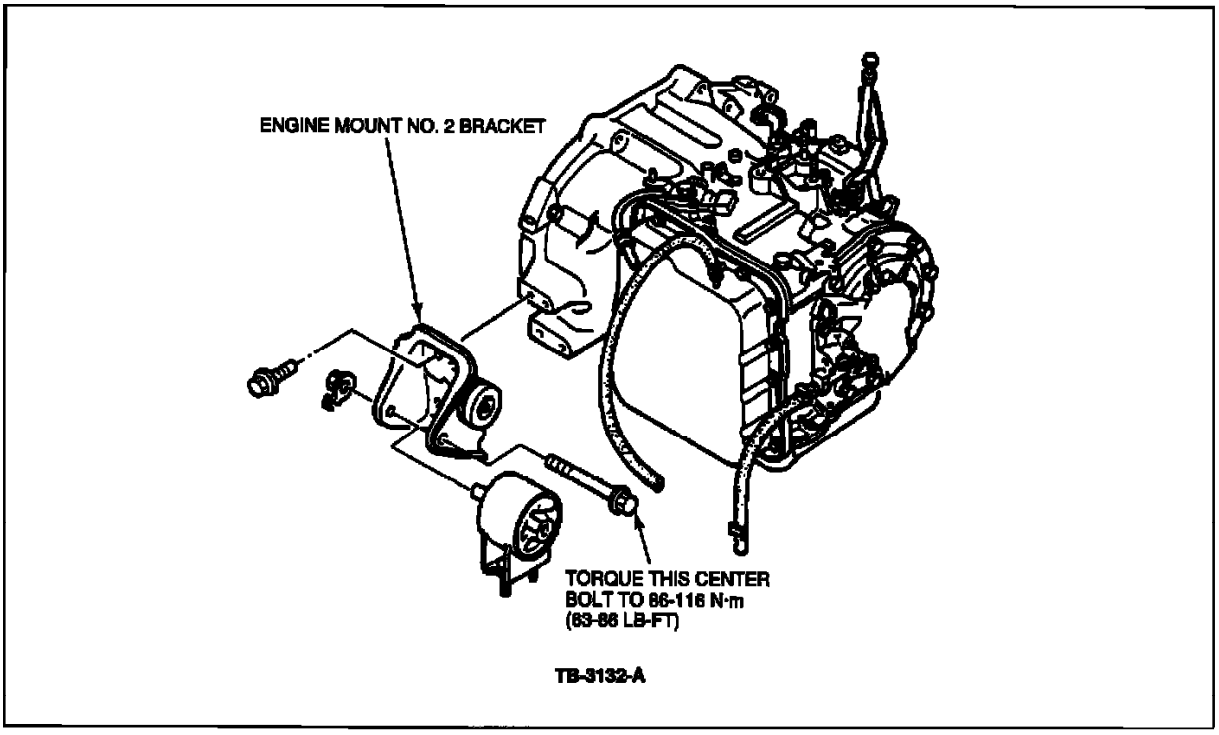

Figure 5

5. Tighten engine mount # 2 center bolt to 63-86 lb.ft. (86-116 N-m), Figure 5.

6. Run the engine until warm and check for vibration.

   a. Check for interference from any components in the engine area that can be a path of vibration from the engine to the body.

   b. Ensure that the radiator is centered and the lower radiator mount is fully seated.

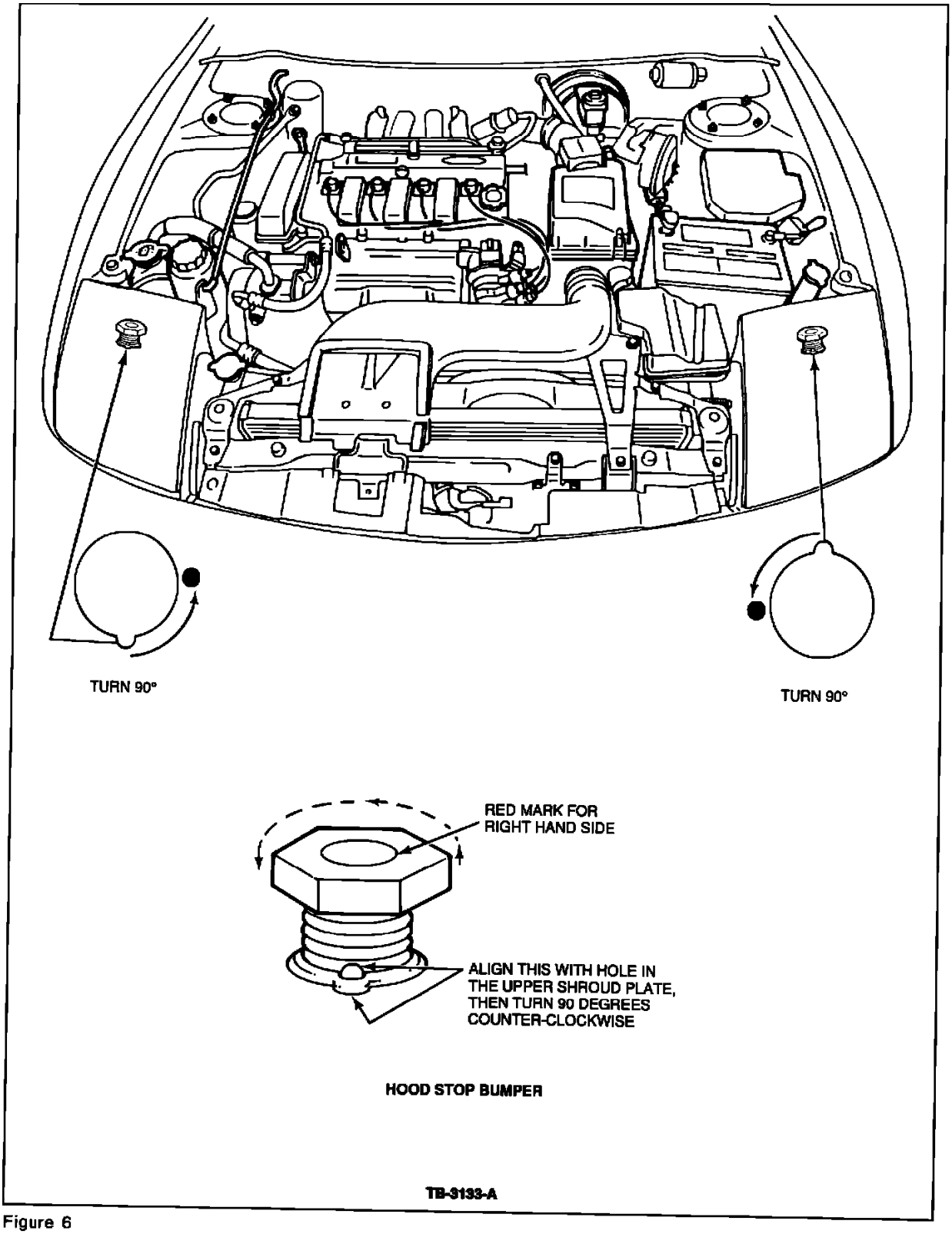

Figure 6

7. Check to be sure that the adjustable hood-stop bumpers are in proper position as shown in Figure 6.

   a. If not in proper position, align the small bump in the hole on the upper shroud plate, Figure 6.

   b. Turn the hood-stop bumpers 90~ counterclockwise to the proper position as shown in Figure 6.

NOTE:
HARDNESS OF THE LEFT AND RIGHT HOOD-STOP BUMPERS IS INTENTIONALLY DIFFERENT. THERE IS A RED MARK IN THE CENTER OF THE RIGHT HAND SIDE HOOD-STOP BUMPER FOR IDENTIFICATION. PART NUMBERS ARE ALSO DIFFERENT.

OTHER APPLICABLE ARTICLES: NONE
SUPERSEDES: 93-12-10
WARRANTY STATUS:
Eligible Under Bumper To Bumper Warranty Coverage

OPERATION	DESCRIPTION	TIME

1993 Ford Probe L4-121 2.0L DOHC VIN A MFI

931808A	Inspect Only	0.2 Hr.
931808B	Inspect And Repair	0.8 Hr.

DEALER CODING

BASIC PART NO.	CONDITION CODE
6038	41

OASIS CODES:
497000, 597997, 702000, 702100, 703000, 703100

Technical Service Bulletin # **06-14-4** Date: **060724**

A/T - Mercon V ATF Usage

TSB 06-14-4

07/24/06

MERCON ATF IS BEING REPLACED BY MERCON V ATF AS A SERVICE FLUID.

FORD:
1980-1997 Crown Victoria
1981-1997 Mustang, Thunderbird
1981-2003 Escort
1986-1993 Festiva
1986-1997 Taurus
1989-1997 Probe
1994-1997 Aspire
1995-2000 Contour
1980-1996 Bronco
1981-2003 F-150
1981-2004 E-Series, F-Super Duty
1983-1996 Ranger
1986-1996 Aerostar
1991-1997 Explorer
1993-2004 F-53 Motorhome Chassis
1995-1998 Windstar
1997-2004 Expedition
2000-2005 Excursion
2001-2007 Escape
1987-2000 F-B-Series
2000-2007 F-650, F-750

LINCOLN:
1980-1997 Town Car
1981-1997 Continental
1993-1997 Mark VIII
1998-2004 Navigator
2002-2003 Blackwood

MERCURY:
1980-1997 Grand Marquis
1981-1997 Cougar
1986-1997 Sable
1987-1999 Tracer
1995-2000 Mystique
1999-2002 Cougar
1993-2002 Villager
1997 Mountaineer
2005-2007 Mariner

MERKUR:
1985-1989 XR4TI

This article supersedes TSB 01-15-7 to update the vehicle application chart.

ISSUE
MERCON(R) Automatic Transmission Fluid is being replaced by MERCON(R) V as a service fluid.

ACTION

Beginning immediately all automatic transmission / transaxle applications requiring MERCON(R) can now be serviced using MERCON(R) V or MERCON(R) Automatic Transmission Fluid or dual usage fluids labeled MERCON(R) / MERCON(R) V. After July 1, 2007, MERCON(R) Automatic Transmission Fluid will no longer be manufactured, therefore, availability of this fluid will only continue for however long it takes to deplete what remains in inventory.

SERVICE PROCEDURE

Service automatic transmissions requiring MERCON(R) with MERCON(R) V or MERCON(R) Automatic Transmission Fluid or dual usage fluids labeled MERCON(R) / MERCON(R) V

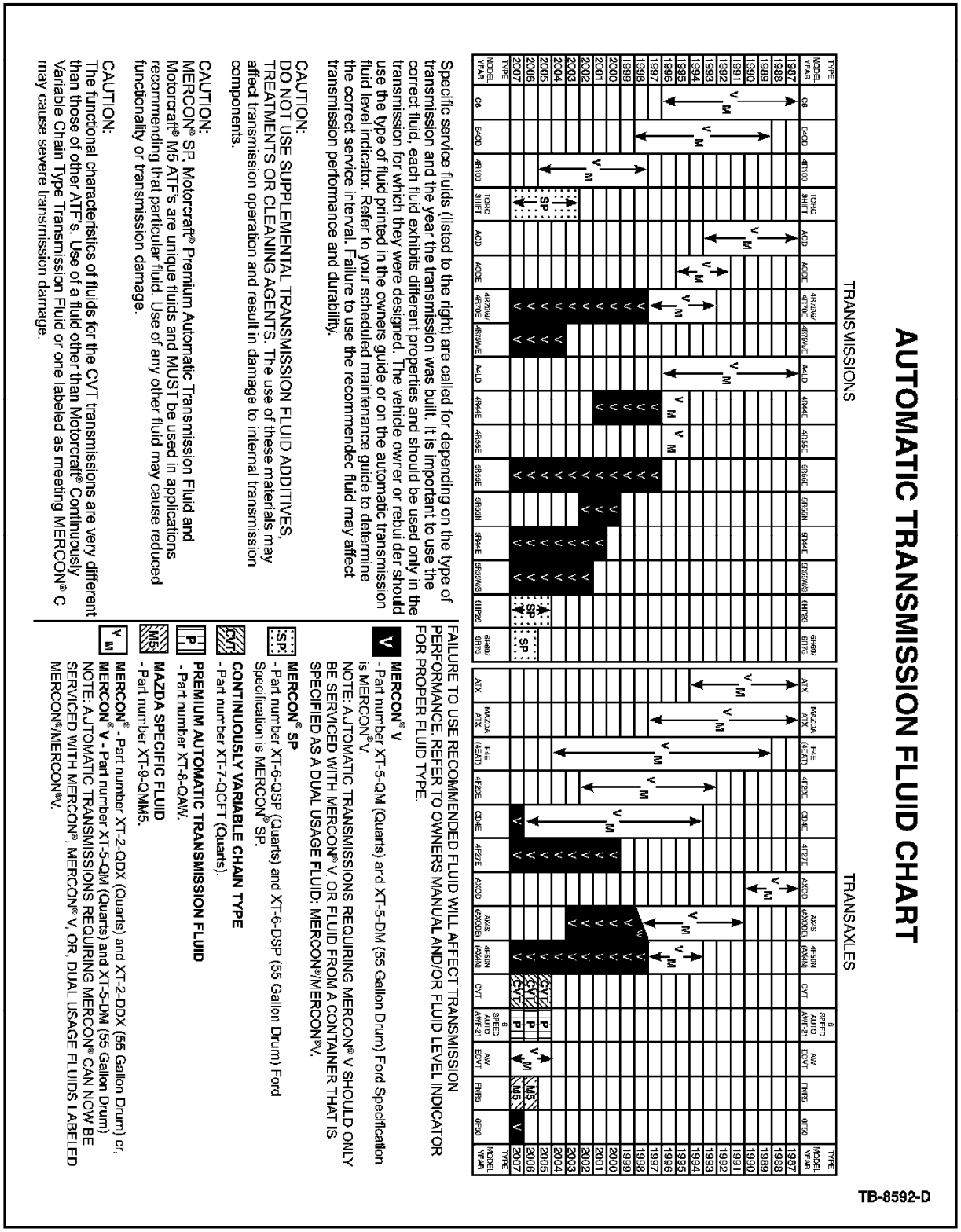

Figure 1

For proper fluid application on current and past model vehicles equipped with automatic transmissions I transaxles refer to the fluid usage chart. (Figure 1)

CAUTION
AUTOMATIC TRANSMISSIONS / TRANSAXLES THAT REQUIRE MERCON® V SHOULD STILL ONLY USE MERCON(R) V OR DUAL USAGE FLUID LABELED MERCON(R) / MERCON(R) V.

CAUTION
MERCON(R) SP, MOTORCRAFT PREMIUM AUTOMATIC TRANSMISSION FLUID AND MOTORCRAFT M5 ATFS ARE UNIQUE FLUIDS AND MUST BE USED IN APPLICATIONS RECOMMENDING THAT PARTICULAR FLUID.

USE OF ANY OTHER FLUID MAY CAUSE REDUCED FUNCTIONALITY OR TRANSMISSION DAMAGE.

CAUTION
THE FUNCTIONAL CHARACTERISTICS OF FLUIDS FOR CVT TRANSMISSIONS ARE VERY DIFFERENT THAN THOSE OF OTHER AUTOMATIC TRANSMISSION FLUIDS (ATFS).

USE OF A FLUID OTHER THAN MOTORCRAFT CONTINUOUSLY VARIABLE CHAIN TYPE TRANSMISSION FLUID OR ONE LABELED AS MEETING MERCON(R) C WILL CAUSE FUNCTIONALITY CONCERNS AND INTERNAL TRANSMISSION DAMAGE.

CAUTION
DO NOT USE AUTOMATIC TRANSMISSION FLUID SUPPLEMENTS, ADDITIVES, TREATMENTS OR CLEANING AGENTS.

PART NUMBER	PART NAME
XT-2-QDX	MERCON® (Quart)
XT-2-DDX	MERCON® (55 Gal. Drum)
XT-5-QM	MERCON® V (Quart)
XT-5-DM	MERCON® V (55 Gal. Drum)

Parts Block

WARRANTY STATUS: Information Only

NOTE: The information in Technical Service Bulletins is intended for use by trained, professional technicians with the knowledge, tools, and equipment to do the job properly and safely. It informs these technicians of conditions that may occur on some vehicles, or provides information that could assist in proper vehicle service. The procedures should not be performed by "do-it-yourselfers". Do not assume that a condition described affects your car or truck. Contact a Ford, Lincoln, or Mercury dealership to determine whether the Bulletin applies to your vehicle.

Disclaimer

Technical Service Bulletin # **98-7-4** Date: **980413**

Engine - New Gasket Sealer

Article No.
98-7-4

04/13/98

LEAKS - OIL - AVAILABILITY OF NEW SILICONE
GASKET AND SEALANT

FORD:
1984-94 TEMPO
1984-97 THUNDERBIRD
1984-98 CROWN VICTORIA, ESCORT, MUSTANG
1986-98 TAURUS
1989-97 PROBE
1994-97 ASPIRE
1995-98 CONTOUR

LINCOLN-MERCURY:
1984-94 TOPAZ
1984-97 COUGAR
1984-98 CONTINENTAL, GRAND MARQUIS, TOWN CAR
1986-98 SABLE
1989-98 TRACER
1993-98 MARK VIII
1995-98 MYSTIQUE

LIGHT TRUCK:

1993 Ford Probe L4-121 2.0L DOHC VIN A MFI

1983-98 RANGER
1984-96 BRONCO
1984-98 ECONOLINE, F-150, F-250 HD, F-250 LD
1984-99 SUPER DUTY F SERIES
1986-97 AEROSTAR
1991-98 EXPLORER
1993-98 VILLAGER
1996-98 WINDSTAR
1997-98 EXPEDITION, MOUNTAINEER
1998 NAVIGATOR

ISSUE:
A new Silicone Gasket And Sealant (F7AZ-19554-EA) material is now available for routine engine service or repair of engine oil leaks.

ACTION:
Use the new Silicone Gasket And Sealant for servicing:

^ Oil pan gaskets and T-joints

^ Intake end seals

^ Overhead cam caps

^ Valve and timing covers

^ Bearing split lines

^ Side cover plates

^ Rear oil seals

The new sealant has better adhesion, flexibility for moving/vibrating joints, resistance to fluids, and is easier to dispense.

NOTE:
THIS MATERIAL IS NOT A DIRECT REPLACEMENT FOR A SILICONE RUBBER, GRAPHITE, OR OTHER TYPE OF PRE-FORMED GASKET.

PART NUMBER	PART NAME
F7AZ-19554-EA	Silicone Gasket And Sealant

OTHER APPLICABLE ARTICLES: NONE

WARRANTY STATUS: INFORMATION ONLY

OASIS CODES: 401000, 499000

Technical Service Bulletin # **01-10-12** Date: **010528**

Wire Harness - Terminal Repair Kit

Article No.
01-10-12

5/28/01

WIRING - WIRE HARNESS TERMINAL REPAIR KIT
AND WIRE SPLICE PROCEDURE

FORD:
1985-1994 TEMPO
1985-1997 THUNDERBIRD
1985-2002 CROWN VICTORIA, ESCORT, MUSTANG
1986-2002 TAURUS
1988-1993 FESTIVA
1993-1997 PROBE
1994-1997 ASPIRE
1995-2000 CONTOUR
2000-2002 ESCORT ZX2, FOCUS
2002 THUNDERBIRD
1985-1990 BRONCO II

1993 Ford Probe L4-121 2.0L DOHC VIN A MFI

1985-1996 BRONCO
1985-1997 F-250 HD, F-350
1985-2002 ECONOLINE, F-150, RANGER
1986-1997 AEROSTAR
1988-1997 F SUPER DUTY
1991-2002 EXPLORER
1995-2002 WINDSTAR
1997-2002 EXPEDITION
1999-2002 SUPER DUTY F SERIES
2000-2002 EXCURSION
2001-2002 ESCAPE, EXPLORER SPORT TRAC, EXPLORER SPORT
1985-1999 F & B SERIES
1999-2002 F-650, F-750

LINCOLN:
1985-1992 MARK VII
1985-2002 CONTINENTAL, TOWN CAR
1993-1998 MARK VIII
2000-2002 LS
1998-2002 NAVIGATOR

MERCURY:
1985-1994 TOPAZ
1985-1997 COUGAR
1985-2002 GRAND MARQUIS
1986-2002 SABLE
1991-1999 TRACER
1995-2000 MYSTIQUE
1999-2002 COUGAR
1993-2002 VILLAGER
1997-2002 MOUNTAINEER

This article is being republished in its entirety to update the model year coverage and parts supplier information.

ISSUE

A wire harness terminal repair kit is available for repairing electrical wiring harnesses. This kit allows the dealer to repair broken or corroded terminals instead of replacing an entire wiring harness.

ACTION

The Repair Kit that started it all – Box 1 and 2. Repair Kit Box 1 and 2 allows you to service 100% of the electrical terminals on 1965 through 1987 Ford and Lincoln-Mercury vehicles and many terminals on 1988 and newer vehicles.

Repair Kit Box 1 and 2 includes:

- Two cabinets containing five (5) each of ninety-six (96) different terminals – each machine-crimped to 4 inches of high temperature wire.
- Deutsch Jiffy Splice seals, sockets and pins, to provide a durable waterproof splice.

Repair Kit Box 3 includes:

- One cabinet containing five (5) each of fifty-nine (59) different terminals – each machine-crimped to 4 inches of high temperature wire.
- Heat shrink tubing containing hot melt wax, to provide a durable waterproof seal.

For maximum coverage:
Together, Repair Kit Box 1 and 2, Box 3 – and the new Box 4 allow you to service:

- 100% of terminals on 1965-1994 Ford and Lincoln-Mercury vehicles.
- 90% of terminals on 1995 and newer Ford and Lincoln-Mercury vehicles.
- 75% plus of terminals on Ford joint venture vehicles.

Repair Kit Box 4 includes:

- One cabinet containing five (5) each of sixty (60) different terminals – each machine-crimped to 4 inches of high temperature wire.

One picture is worth thousands.
Illustrations are on the front of each cabinet drawer to make terminal identification and location fast and easy.

Placing you order is easy.
Simply complete the order form to receive your Ford Wire Harness Terminal Repair Kit and soon you will be saving time and money on wiring repairs.

TB-6341-A

Figure 6

WIRE HARNESS TERMINAL REPAIR KIT
ORDER FORM

2 easy ways to order:*

BY MAIL	BY FAX	CUSTOMER SERVICE
Mail completed order form to: Ford Component Sales, LLC 17536 Laurel Park Drive North Suite 200E Livonia, MI 48152	Fax completed order form to: (734) 523-5910 or (734) 523-5920 Attn: Customer Service	Call FCS Customer Service: Dial (877) 682-4276 Canada, dial (800) 337-0823 or (905) 336-6696

1. SOLD TO: (please print)		
DEALERSHIP NAME		
ORDERED BY		
STREET		
CITY	STATE	ZIP CODE
TELEPHONE ( )		

2. SOLD TO: (if different than SOLD TO)		
DEALERSHIP NAME		
ATTENTION		
STREET ADDRESS		
CITY	STATE	ZIP CODE
TELEPHONE ( )		

3. REPAIR KIT MERCHANDISE SECTION: (see sections 4-7 for restock merchandise)

QUANTITY ORDERED	PART NUMBER	PRODUCT DESCRIPTION	PRICE (U.S. Currency)	TOTAL
	101114	REPAIR KIT Box 1 and 2	$322.00	
	103900	REPAIR KIT Box 3	$250.00	
	105400	REPAIR KIT Box 4	$292.00	
	105752	HEAT SHRINK TUBING FOR 16, 18 AND 20 GAUGE WIRE ADHESIVE LINED-DUAL WALL (250 pc pack)	$39.00	
	TOTAL REPAIR KIT MERCHANDISE			$

ORDER TYPE & SHIPPING INFORMATION

Please specify your preferred method of shipment and provide the required information. Please complete section 8 for emergency orders. Emergency orders will be assessed a 10% handling fee.

	Account Number
Federal Express	
UPS	
Other:	

All shipping expenses are the responsibility of the customer. There are two types of orders that can be placed through this program. Stock Orders and Emergency Orders. Stock orders will be filled using 2nd day shipping and will arrive at your place of business within 5 business days. Emergency orders will be filled using next day delivery and will arrive at your place of business within 48 hours for orders received before noon E.S.T. Monday through Thursday.

8. PAYMENT SECTION:

A. Repair Kit Merchandise (section 3)	$
B. Restock Merchandise (sections 4 + 5 + 6 + 7)	$
C. Emergency Order add 10% ☐ Check here if this is an Emergency Order	$
D. **MERCHANDISE TOTAL** (A + B + C) $85 minimum	$
TOTAL ORDER AMOUNT	$

Prices and specifications are subject to change without notice.

FPS 8505 (REV. 4/96)

TB-6342-A

Figure 7

4. BOX 1 RESTOCK MERCHANDISE SECTION: (Each terminal is machine-crimped to 4" of black high temperature wire).

Number of Packs	Drawer Number	Supplier Part Number	FCS Terminal Number	Pack Quantity	Price Per Pack (U.S. Currency)	Total Price (U.S. Currency)
	A1	101011	E8EB-14461-BA	10	$7.50	
	A2	101012	E8EB-14461-AA	10	$7.50	
	A3	101013	E8EB-14461-JA	10	$7.50	
	A4	101014	E8EB-14461-HA	10	$7.50	
	A5	101015	E7EB-14461-GA	10	$7.50	
	A6	101016	E7EB-14461-EA	10	$7.50	
	A7	101017	C8OB-14461-C	10	$7.50	
	A8	101018	E5LB-14461-AA	10	$21.00	
	A9	101019	E3VB-14461-AA	10	$7.50	
	B1	101020	F1OB-14488-BA	10	$7.50	
	B2	101021	E8EB-14488-UA	10	$7.50	
	B3	101022	F1OB-14488-AA	10	$7.50	
	B4	101023	E8EB-14488-ADA	10	$7.50	
	B5	101024	E7EB-14488-NA	10	$7.50	
	B6	101025	E8EB-14488-YA	10	$7.50	
	B7	101026	E5LB-14488-AA	10	$7.50	
	B8	101027	E3VB-14488-AA	10	$7.50	
	B9	101028	E7EB-14487-GA	10	$7.50	
	C1	101029	E8EB-14421-DA	10	$7.50	
	C2	101030	FOEB-14421-DA	10	$7.50	
	C3	101031	E8EB-14421-LA	10	$7.50	
	C4	101032	E8EB-14421-CA	10	$7.50	
	D1	101033	E8EB-14474-TA	10	$7.50	
	D2	101034	E8EB-14474-VA	10	$7.50	
	D3	101035	F1OB-14474-BA	10	$7.50	
	D4	101036	F1OB-14474-AA	10	$7.50	
	D5	101037	E8EB-14474-XA	10	$7.50	
	D6	101038	E8EB-14474-YA	10	$7.50	
	D7	101039	E8EB-14474-AKA	10	$7.50	
	D8	101040	E8EB-14474-AJA	10	$7.50	
	D9	101041	E8EB-14474-ALA	10	$7.50	
	D10	101042	E8EB-14474-AMA	10	$7.50	
	D11	101043	E8EB-14474-AFA	10	$7.50	
	D12	101044	E8EB-14474-AGA	10	$7.50	
	D13	101045	E8EB-14474-AEA	10	$7.50	
	D14	101046	E8EB-14474-BFA	10	$7.50	
	D15	101047	E5SB-14474-B	10	$7.50	
	D16	101048	E5SB-14474-A	10	$7.50	
	D17	101049	E7EB-14474-APA	10	$7.50	
	D18	101050	E5LB-14474-BA	10	$7.50	
	D19	101051	E4EB-14474-DA	10	$7.50	
	D20	101052	E27B-14474-BA	10	$7.50	
	D20a	101053	E8OB-14488-HA	10	$7.50	
	D21	101054	E99B-14474-AA	10	$7.50	
	D22	101055	E3SB-14474-GA	10	$7.50	
	D23	101056	E3SB-14474-BA	10	$7.50	
	D24	101057	E5LB-14474-CA	10	$7.50	
	D25	101058	E8EB-14474-AXA	10	$7.50	
	D26	101059	E8EB-14474-SA	10	$7.50	
	D26a	101060	D4SB-14474-BA	10	$7.50	
			TOTAL BOX 1 RESTOCK MERCHANDISE			$

TB-6343-A

Figure 8

5. BOX 2 RESTOCK MERCHANDISE SECTION: (Each terminal is machine-crimped to 4" of black high temperature wire).

Number of Packs	Drawer Number	Supplier Part Number	FCS Terminal Number	Pack Quantity	Price Per Pack (U.S. Currency)	Total Price (U.S. Currency)
	D26b	101061	E7SB-14474-AA	10	$7.50	
	D27	101062	E8EB-14474-PA	10	$7.50	
	D28	101063	E4LB-14474-CA	10	$7.50	
	D29	101064	E57B-14474-BA	10	$7.50	
	D30	101065	E57B-14474-CA	10	$7.50	
	D31	101066	E7EB-14474-ASA	10	$7.50	
	D32	101067	D4AB-14474-JA	10	$7.50	
	D33	101068	E8EB-14474-MA	10	$7.50	
	E1	101069	E8EB-14474-ACA	10	$7.50	
	E2	101070	E8EB-14474-ABA	10	$7.50	
	E3	101071	E3EB-14474-BA	10	$7.50	
	E4	101072	E7EB-14474-UA	10	$7.50	
	E5	101073	E6EB-14474-AA	10	$7.50	
	F1	101074	E8EB-14417-KA	10	$7.50	
	F2	101075	E8EB-14417-MA	10	$7.50	
	F3	101076	D2OB-14417-BA	10	$7.50	
	F4	101077	D5AB-14417-AA	10	$7.50	
	G1	101078	EOSB-14490-BA	10	$7.50	
	G2	101079	EOSB-14A438-BA	10	$7.50	
	G3	101080	E7EB-14490-BA	10	$7.50	
	G4	101081	E7EB-14A438-BA	10	$7.50	
	G5	101082	E8EB-14490-AA	10	$7.50	
	G6	101083	C6MB-13702-A	10	$7.50	
	H1	101084	E8EB-14474-ANA	10	$7.50	
	H2	101085	E8EB-14474-JA	10	$7.50	
	H3	101086	D0VB-14474-D	10	$7.50	
	H4	101087	D0VB-14474-C	10	$7.50	
	H5	101088	E7EB-14487-DA	10	$7.50	
	H6	101089	E8EB-14498-BA	10	$7.50	
	H7	101090	E5EB-14487-BA	10	$21.00	
	H8	101091	E5EB-14487-DA	10	$21.00	
	H9	101092	E7EB-14490-DA	10	$7.50	
	H10	101093	E7EB-14490-EA	10	$7.50	
	H11	101094	E6UB-14474-AA	10	$7.50	
	I1	101095	E8EB-14488-AFA	10	$7.50	
	I2	101096	E8EB-14488-AGA	10	$7.50	
	I3	101097	E8EB-14488-AHA	10	$7.50	
	J1	101098	E96B-14474-BA	10	$7.50	
	J2	101099	E9EB-14474-DA	10	$7.50	
	J3	101100	E8EB-14474-BCA	10	$7.50	
	J4	101101	E8EB-14474-BDA	10	$7.50	
	K1	**101102**	**E6DB-14421-AA**	**0**	**N/A**	**Obsolete**
	K2	**101103**	**E43B-14421-BA**	**0**	**N/A**	**Obsolete**
	L1	101104	E8EB-14463-RA	10	$7.50	
	L2	101105	E8EB-14463-ACA	10	$7.50	
	M1	101106	E8EB-14490-BA	10	$7.50	
	N1		101107	20	$12.50	
	P1		101108	20	$7.50	
	N2		101109	20	$7.50	
	P2		101110	20	$7.50	
	Q1		101111	20	$50.00	
	Q2		101112	20	$63.00	
			TOTAL BOX 2 RESTOCK MERCHANDISE			**$**

TB-6344-A

Figure 9

6. BOX 3 RESTOCK MERCHANDISE SECTION: (Each terminal is machine-crimped to 4" of black high temperature wire).

Number of Packs	Drawer Number	Supplier Part Number	FCS Terminal Number	Pack Quantity	Price Per Pack (U.S. Currency)	Total Price (U.S. Currency)
	A10	103901	E8LB-14461-AA	10	$7.50	
	B10	103902	F0VB-14488-BB	10	$21.00	
	B11	103903	F0VB-14488-AA	10	$21.00	
	B12	103904	E8LB-14487-AA	10	$7.50	
	C5	103905	E8UB-14421-BA	10	$7.50	
	C6	103906	E99B-14421-BA	10	$7.50	
	C7		103907	10	$7.50	
	C8		103908	10	$7.50	
	C9		103909	10	$7.50	
	C10		103910	10	$7.50	
	C11		103911	10	$7.50	
	C12		103912	10	$7.50	
	C13		103913	10	$7.50	
	C14		103914	10	$7.50	
	C15		103915	10	$7.50	
	C16		103916	10	$7.50	
	D34	103917	F0VB-14474-VB	10	$7.50	
	D35	103918	F0VB-14474-TB	10	$7.50	
	D36	103919	F0VB-14474-PC	10	$7.50	
	D37	103920	F0VB-14474-SC	10	$7.50	
	D38	103921	F0VB-14474-EC	10	$7.50	
	D39	103922	F0VB-14474-DC	10	$7.50	
	D40	103923	F0VB-14474-BA	10	$7.50	
	D41	103924	F0VB-14474-AA	10	$7.50	
	D42	103925	E9EB-14474-BA	10	$7.50	
	D43	103926	E93B-14474-AA	10	$7.50	
	D44	103927	F58B-14474-EA	10	$7.50	
	D45	103928	F0VB-14474-HA	10	$7.50	
	D46	103929	F0VB-14474-JA	10	$7.50	
	D47	103930	E83B-14474-AA	10	$7.50	
	D48	103931	E8UB-14474-BA	10	$7.50	
	D49	103932	E93B-14474-DA	10	$7.50	
	D50	103933	F0DB-14474-BA	10	$7.50	
	D51	103934	F0DB-14474-AA	10	$7.50	
	D52	103935	E96B-14474-AA	10	$7.50	
	D53	103936	E8LB-14474-FA	10	$7.50	
	D54	103937	E93B-14474-BA	10	$7.50	
	D55		103938	10	$7.50	
	D56	103939	F3DB-14474-DA	10	$7.50	
	D57		103940	10	$7.50	
	D58		103941	10	$7.50	
	D59	103942	E9DB-14474-AA	10	$7.50	
	D60	103943	E9DB-14474-BA	10	$7.50	
	D61		103944	10	$7.50	
	D62	103945	F03B-14474-AA	10	$7.50	
	D63	103946	F0LB-14474-AA	10	$7.50	
	D64	103947	F2AB-14474-PA	10	$7.50	
	D65	103948	F2DB-14474-AA	10	$7.50	
	D66	103949	F2DB-14474-CA	10	$7.50	
	D67		103950	10	$7.50	
	F5	103951	F4UB-14474-AA	10	$7.50	
	F6	103952	F4UB-14474-BA	10	$7.50	
	F7	103953	F2AB-14474-HA	10	$7.50	
	F8	103954	F2AB-14474-LA	10	$7.50	
	F9	103955	F2AB-14474-DA	10	$7.50	
	F10	103956	F2AB-14474-FA	10	$7.50	
	H12	103957	E9EB-14474-AA	10	$7.50	
	L3	103958	F1DB-14463-AA	10	$7.50	
	L4	103959	E9DB-14463-BA	10	$7.50	
			TOTAL BOX 3 RESTOCK MERCHANDISE			$

TB-6345-A

Figure 10

7. BOX 4 RESTOCK MERCHANDISE SECTION: (Each terminal is machine-crimped to 4" of black high temperature wire).

Number of Packs	Drawer Number	Supplier Part Number	FCS Terminal Number	Pack Quantity	Price Per Pack (U.S. Currency)	Total Price (U.S. Currency)
	A11	105401	F4SB-14461-EB	10	$7.50	
	A12	105402	F6DB-14461-BA	10	$7.50	
	A13	105403	F6DB-14461-CA	10	$7.50	
	A14	105404	409643	10	$12.50	
	A15	105405	409647	10	$12.50	
	A16	105406	409648	10	$12.50	
	A17	105407	MS1576-106	10	$12.50	
	B13	105408	F4SB-14487-AA	10	$7.50	
	B14	105409	F4SB-14487-DB	10	$7.50	
	B15	105410	F6DB-14487-AA	10	$7.50	
	B16	105411	F6DB-14474-BA	10	$7.50	
	B17	105412	F58B-14488-AA	10	$7.50	
	B18	105413	F58B-14488-BA	10	$7.50	
	B19	105414	409645	10	$12.50	
	B20	105415	409650	10	$12.50	
	B21	105416	409651	10	$12.50	
	B22	105417	MS1576-107	10	$12.50	
	B23	105418	F58B-14487-BA	10	$7.50	
	C17	105419	F5LB-14421-AA	10	$7.50	
	C18	105420	F50B-14421-DA	10	$7.50	
	C19	105421	F5VB-14421-AA	10	$7.50	
	C20	105422	F4SB-14421-CA	10	$7.50	
	C21	105423	F4SB-14421-FA	10	$7.50	
	C22	105424	F4SB-14421-EA	10	$7.50	
	C23	105425	F4SB-14421-LA	10	$7.50	
	C24	105426	F4SB-14421-PA	10	$7.50	
	C25	105427	F50B-14421-CA	10	$7.50	
	D68	105428	F57B-14474-BB	10	$7.50	
	D69	105429	F4SB-14474-KA	10	$7.50	
	D70	105430	F3DB-14474-EA	10	$7.50	
	D71	105431	F4SB-14474-MA	10	$7.50	
	D72	105432	F4ZB-14474-CA	10	$7.50	
	D73	105433	E8EB-14474-AYA	10	$7.50	
	D74	105434	F4UB-14474-FA	10	$7.50	
	D75	105435	F4UB-14474-GA	10	$7.50	
	D76	105436	F5ZB-14474-AA	10	$7.50	
	D77	105437	F57B-14474-DB	10	$7.50	
	D78	105438	F4SB-14474-GA	10	$7.50	
	D79	105439	MS1576-108	10	$12.50	
	D80	105440	F2AB-14474-BA	10	$7.50	
	D81	105441	F4ZB-14474-DA	10	$7.50	
	D82	105442	F57B-14474-NA	10	$7.50	
	D83	105443	F5LB-14474-AA	10	$7.50	
	D84	105444	F4RB-14474-BA	10	$7.50	
	D85	105445	F58B-14474-DA	10	$7.50	
	D86	105446	F5AB-14474-AA	10	$7.50	
	D87	105447	F57B-14474-HA	10	$7.50	
	D88	105448	F4RB-14474-AA	10	$7.50	
	D89	105449	F58B-14474-BA	10	$7.50	
	D90	105450	F5ZB-14474-BA	10	$7.50	
	D91	105451	F3VB-14474-AA	10	$7.50	
	D92	105452	F50B-14474-KA	10	$7.50	
	D93	105453	F4TB-14474-AA	10	$7.50	
	D94	105454	F3LB-14474-BA	10	$7.50	
	D95	105455	409723	10	$12.50	
	D96	105456	ESPA DFK 1	10	$12.50	
	F11	105457	F07B-14474-AA	10	$7.50	
	H13	105458	E8EB-14474-ARA	10	$7.50	
	L5	105459	E8EB-14463-AAA	10	$7.50	
	L6	105460	E8EB-14463-JA	10	$7.50	
			TOTAL BOX 4 RESTOCK MERCHANDISE			$

TB-6346-A

Figure 11

If wiring repairs are required, dealers can obtain a kit by using the included Order Form (Figures 6-11) shown. Pricing information is included for the complete boxes and restocking merchandise for the individual drawers.

^ U.S.A. - Ford Component Sales, LLC: Orders may be called in (877)682-4276. Or Fax completed order sheet to (734)523-5920.

^ Canada - Jobborn Manufacturing Limited: Orders may be called into (800)337-0823 or (905)336-6696.

^ Mexico - Fax completed order sheet to (734)523-5920.

SERVICE PROCEDURE

NOTE

AN ULTRA-TORCH (SELF-IGNITING) IS AVAILABLE THROUGH ROTUNDA (107-R0304). THE ULTRA-TORCH IS A CORDLESS SOLDERING IRON/HEAT GUN RECOMMENDED TO BE USED FOR SOLDERING, STEP 2, AND HEAT SHRINKING, STEP 5, PROCESSES.

Dual Wall Heat Shrink Tubing provided with Repair Kit Box # 3 may be used for 16, 18, or 20 gauge wire only. For wire gauges larger than 16, a Deutsch Jiffy Splice must be used (available in Repair Kit Box # 1 and # 2).

NOTE

A HIGH COMPRESSION CRIMP TOOL MUST BE USED WITH THE DEUTSCH JIFFY SPLICES. ROTUNDA DOES NOT OFFER A HIGH COMPRESSION CRIMP TOOL.

Dual Wall Heat Shrink Tubing containing hot melt wax is included with Repair Kit Box # 3 and offers a Ford-approved method for joining two (2) circuits. When properly used with a soldered circuit joint, this Ford-approved heat shrink tubing will provide a stable, low electrical resistance connection for years of service in any Ford or Lincoln-Mercury vehicle.

If an unreliable splicing method is used, the circuit joint may be unstable, resulting in variable resistance or a short circuit. Variable resistance can be the result of oxidation (corrosion) caused by air within the joint. A short circuit (signal leakage) is caused by either moisture on the circuit joint or a frayed wire coming in contact with another wire. Either situation may cause electrical Systems to malfunction.

It is important to use heat shrink tubing containing hot melt wax over a soldered circuit joint to create a waterproof and airtight connection.

The following five (5) Steps should be used when joining two (2) circuits using solder and heat shrink tubing containing hot melt wax:

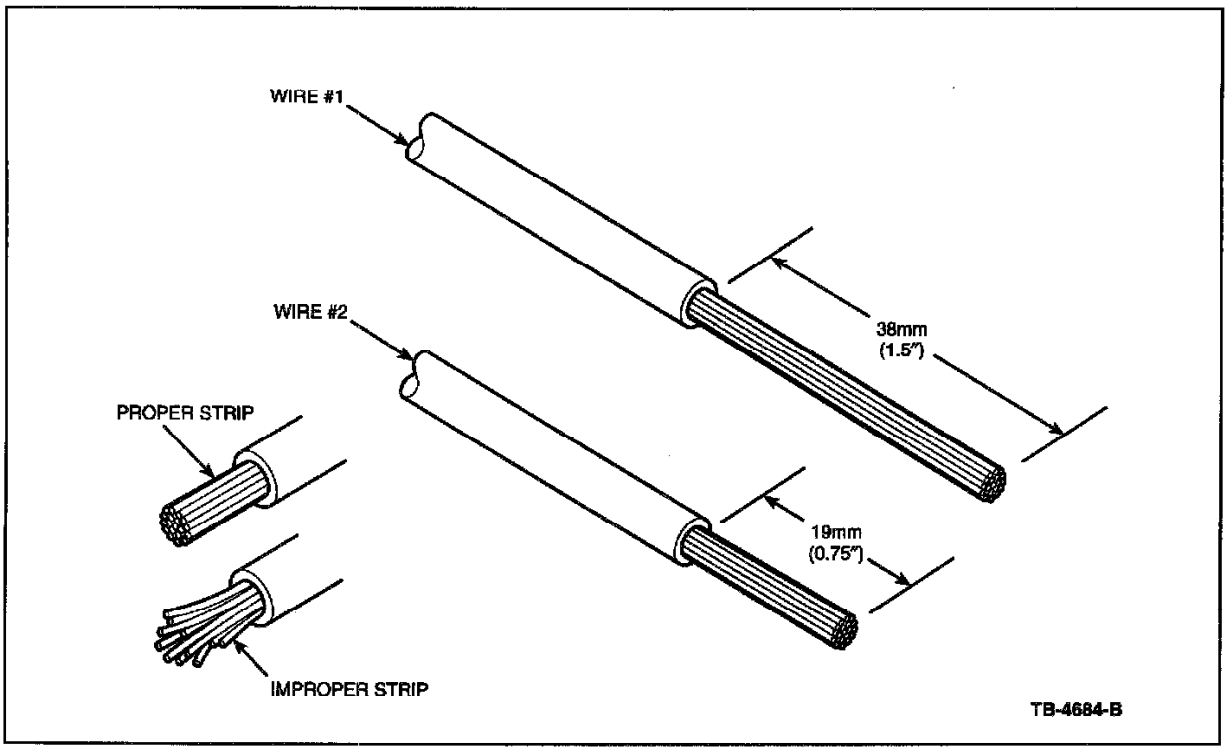

Figure 1

1. Strip 38mm (1.5") of insulation from Wire # 1 and 19mm (0.75 ") of insulation from Wire # 2 (Figure 1). Pull wire straight from stripper. If wire is pulled at an angle, wire strands may be cut off. If more than one (1) strand is cut off during stripping, cut off end and restrip.

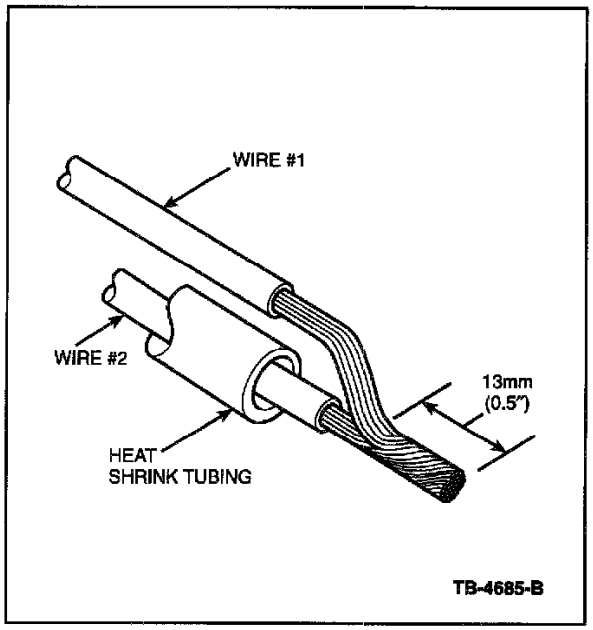

Figure 2

2. Twist and solder the wires (do not forget to install the heat shrink tubing first) (Figure 2). Use rosin core mildly activated (RMA) solder. DO NOT use acid core solder.

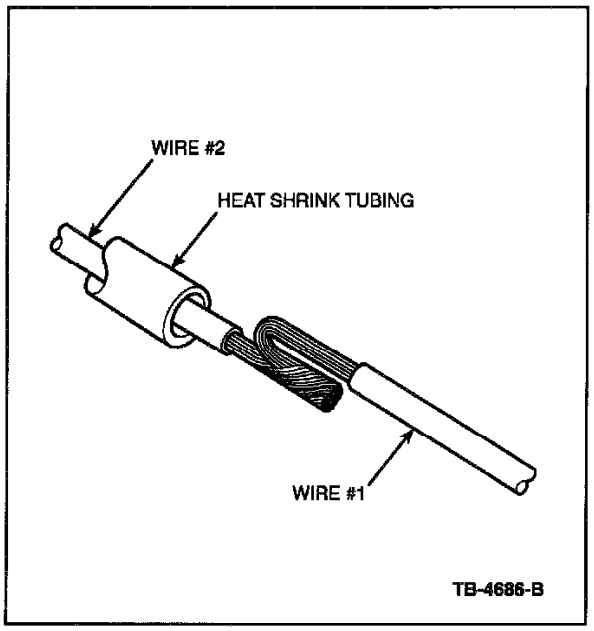

Figure 3

3. Form (bend) the circuit into a shape for sealing (Figure 3).

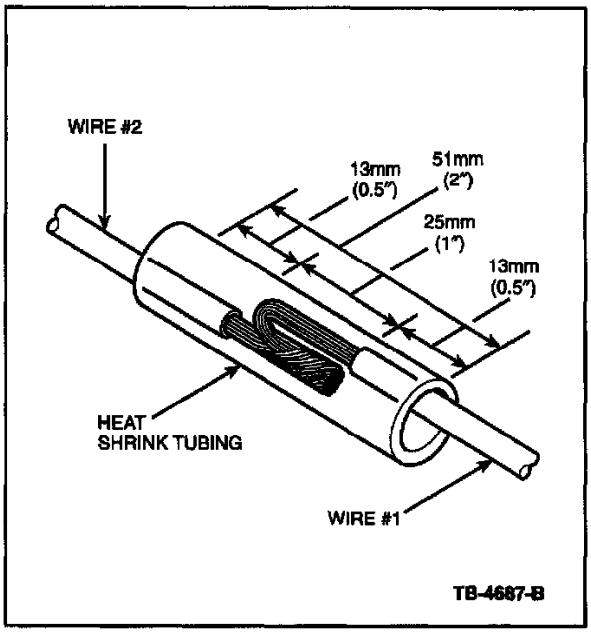

Figure 4

4. Reposition heat shrink tubing over splice (Figure 4).

NOTE

DURABILITY OF A HEAT SHRINK TUBING SPLICE IS DEPENDENT ON THE HOT MELT WAX THAT WILL APPEAR FROM BOTH ENDS OF THE TUBE. THE HOT MELT WAX FORMS AN ADHESIVE SEAL BETWEEN THE WIRE INSULATION AND THE HEAT SHRINK TUBING WHICH PREVENTS AIR AND MOISTURE FROM ENTERING THE SOLDER POINT.

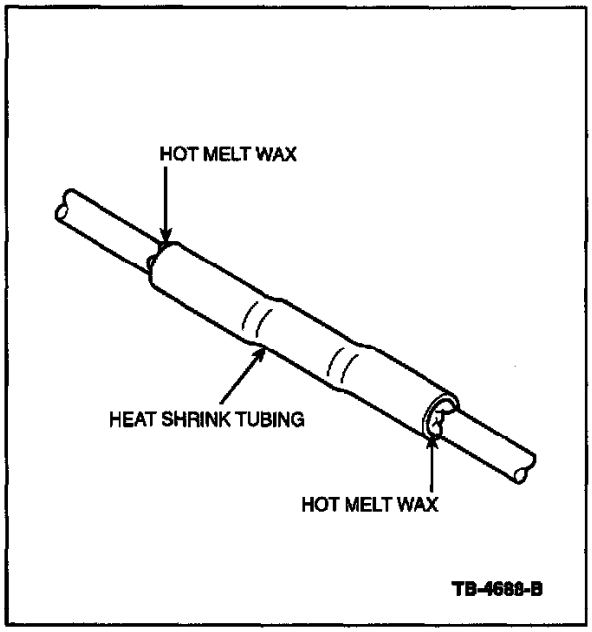

Figure 5

5. Heat the entire length of the heat shrink tubing until the hot melt wax appears from both ends of the tubing (Figure 5).

OTHER APPLICABLE ARTICLES: NONE
SUPERSEDES: 99-22-2
WARRANTY STATUS: INFORMATION ONLY

OASIS CODES: 203000, 203200, 205000, 290000

Technical Service Bulletin # **92104** Date: **920506**

Electrical/Vacuum/Troubleshooting Manual

Article No.
92-10-4

05/06/92

EVTM IMPROVEMENTS TO ASSIST DEALERSHIP TECHNICIANS IN REPAIRING ELECTRICAL CONCERNS

FORD:
1993 CROWN VICTORIA, FESTIVA, MUSTANG, PROBE, TAURUS, TEMPO, THUNDERBIRD

LINCOLN-MERCURY:
1993 CAPRI, CONTINENTAL, COUGAR, GRAND MARQUIS, MARK VII, SABLE, TOPAZ, TOWN CAR, TRACER

LIGHT TRUCK:
1993 AEROSTAR, BRONCO, ECONOLINE, EXPLORER, F SUPER DUTY, F-150-350 SERIES, RANGER

ISSUE:
Several improvements have been made to the 1993 EVTM'S to assist Dealership Technicians in repairing electrical concerns.

ACTION:
Technicians in a number of dealerships were surveyed on ways to improve the EVTM'S before changes were made. Changes made to the 1993 EVTM'S are:

1. Voltage/Resistance values have been added to the schematics. Technicians can use these known good values when inspecting a circuit.

   ^ This means less trial and error with known good components.

   ^ Obvious troubleshooting hints that ask you to check for voltage readings have been removed.

2. More component internals will be shown, allowing you to better determine if a component is operating properly without replacing it.

3. Connector face information for each system has been moved back into the system cell directly behind the schematics.

4. Section 153 "Harness Causal Part Number" has been included for 1993. This cell will list the base part number of the wire harness by connector number. Once a technician has located a wiring concern, he can look up the connector number in Section 153 to quickly determine the causal part number to include in the repair comments.

5. A more durable cover has been added to resist wear and tear.

Please look for these changes when you receive your 1993 Manuals and send back the "WE WANT TO HEAR FROM YOU" form located in the front of each manual.

OTHER APPLICABLE ARTICLES: NONE
WARRANTY STATUS: INFORMATION ONLY
OASIS CODES: 203200, 290000

Technical Service Bulletin # **99-26-9** Date: **991227**

Fuel Economy - Customer Expectation vs. Vehicle Usage

Article No.
99-26-9

12/27/99

FUEL ECONOMY - CUSTOMER EXPECTATIONS VERSUS VEHICLE USAGE

FORD:
1988-1993 FESTIVA
1990-1994 TEMPO
1990-1997 PROBE, THUNDERBIRD
1990-1999 ESCORT
1990-2000 CROWN VICTORIA, MUSTANG, TAURUS
1994-1997 ASPIRE
1995-2000 CONTOUR
1999-2000 ESCORT ZX2
2000 FOCUS
1990-1996 BRONCO
1990-1997 AEROSTAR, F SUPER DUTY, F-150-350 SERIES
1990-2000 ECONOLINE, RANGER
1991-2000 EXPLORER
1993-2000 VILLAGER
1995-2000 WINDSTAR
1997-2000 EXPEDITION, MOUNTAINEER

1993 Ford Probe L4-121 2.0L DOHC VIN A MFI

1998-2000 F-150, F-250
1999-2000 SUPER DUTY F SERIES

LINCOLN-MERCURY:
1990-1992 MARK VII
1990-2000 CONTINENTAL, TOWN CAR
1993-1998 MARK VIII
2000 LS
1999-2000 NAVIGATOR

MERCURY:
1990-1994 TOPAZ
1990-1997 COUGAR
1990-2000 GRAND MARQUIS, SABLE
1991-1994 CAPRI
1991-1997 TRACER
1995-2000 MYSTIQUE
1999-2000 COUGAR

This TSB article is being republished in its entirety to include vehicles built through the 2000 model year.

ISSUE
Customers may perceive that vehicle fuel economy is lower than it should be, based upon Environmental Protection Agency (EPA) estimates. Fuel economy is most influenced by vehicle usage and duty cycle.

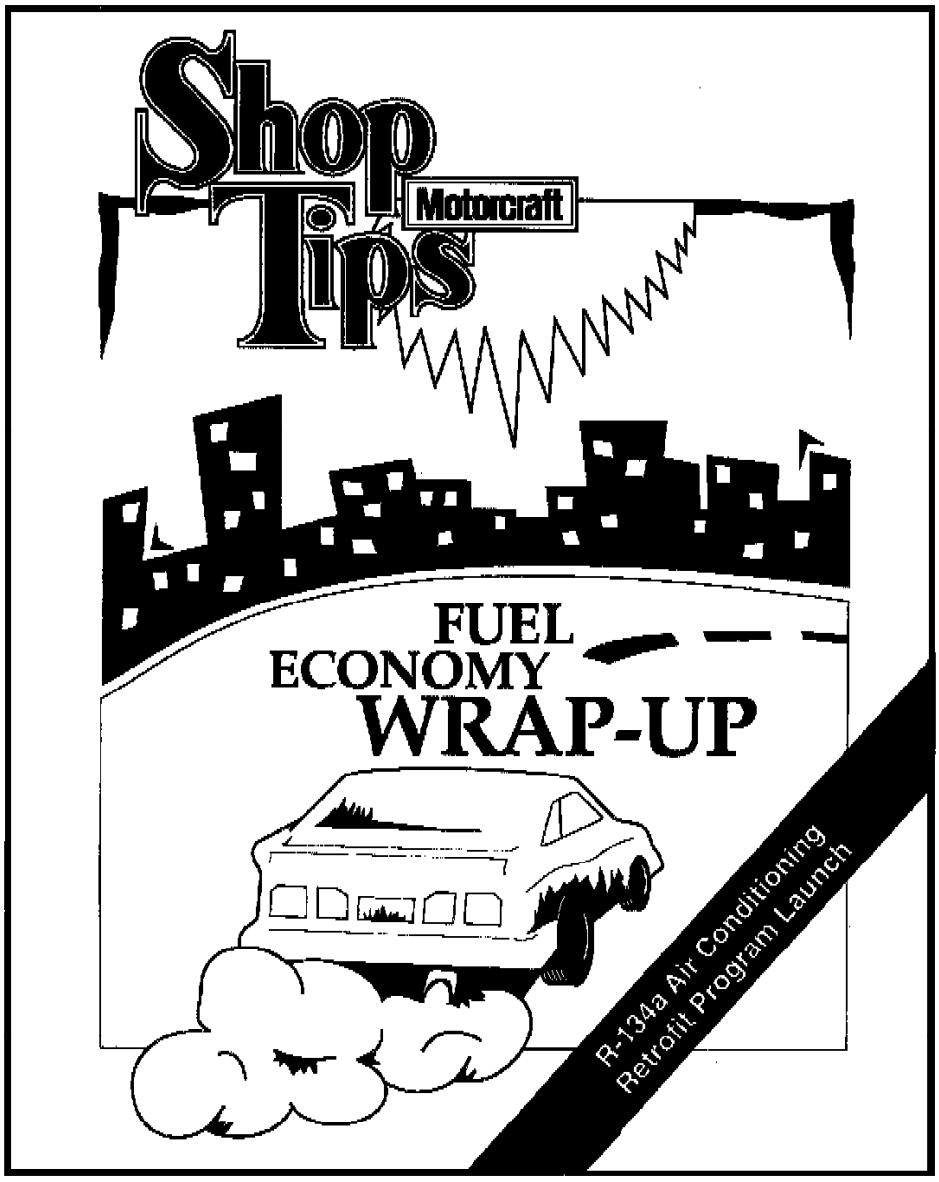

This material has been excerpted from Shop Tips and included here for your convenience. It should be shared with your customers. Shop Tips is no longer published.

Note to Canada: Shop Tips is an American publication. Time did not permit conversion of data to metric. However, the information pertaining to factors affecting fuel economy is still valid.

TB-5562-A

Figure 1

Fuel Economy Wrap-Up

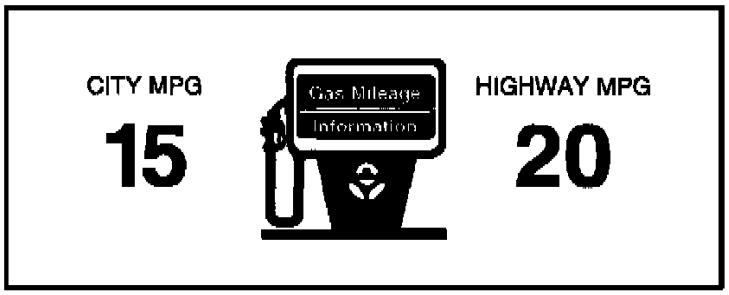

EPA Mileage Estimate On Retail Sticker

HELPING THE CUSTOMER UNDERSTAND FUEL ECONOMY

It is important to distinguish between fuel economy due to the vehicle "usage" versus a malfunction. **"Malfunctions" often are indicated when a significant reduction in fuel economy occurs when operating conditions remain the same.**

In this article, we pull together all the factors that affect fuel economy and see what they really mean for your customer and for you, the technician.

Fuel Economy and the EPA Numbers

The basis for many customer fuel economy concerns are the EPA **City** and **Highway** mpg numbers on the retail sticker (**above**). These numbers are the result of test procedures that were originally developed to measure emissions, not fuel economy.

Very few people will drive in a way that is identical to the EPA tests. You need to point out that the EPA numbers are for comparison between models at the time of purchase and do not reflect the fuel economy an individual will achieve in actual use. If a customer doesn't remember the EPA numbers on the retail sticker, he or she can get that information from the dealership.

For your convenience in explaining these numbers to your customers, we have provided city and highway driving questionnaires on **Figures 5 and 6**. At the top of each questionnaire is an artist's rendition of the driving conditions **simulated** in the EPA testing program and a listing of the test conditions. This information is followed by a list of questions you can ask your customer (or customers can ask themselves). On the basis of the answers, it will become clear that if the customer's fuel economy is less than the EPA ratings, it is due to the driving cycle or the vehicle needing service.

If a customer is driving in a manner very similar to the EPA test conditions and there has been a significant drop in fuel economy, there may be mechanical problems.

Keeping Track of Fuel Economy

If you receive a fuel economy complaint from a customer, you need to determine how they arrived at their numbers. The odometer must be recording properly and they must be filling the tank with the vehicle loaded the same way and on the same level every time. If these conditions aren't met, it's hard to draw conclusions about anything but very big changes in fuel consumption.

TB-5963-A

Figure 2

Fuel Economy Wrap-Up

Does It Really Matter?

Figure 4 features a chart that shows fuel costs at various mpg's for a passenger car driven 12,000 miles, a heavy truck driven 12,000 miles and a heavy truck driven 100,000 miles. Two things are clear from these comparisons:

1. The heavier the vehicle, the more the savings from improvements in fuel economy.
2. The lower the vehicle's average mpg, the higher the fuel cost.

For example:

If the price of fuel is $1.00 per gallon and the vehicle is driven 12,000 miles:

- Decreasing from 40 mpg to 37 mpg results in an increased cost of $24.
- Decreasing from 20 mpg to 17 mpg results in an increased cost of $105.

You can help your customer understand his/her cost factors by giving them this formula:

$$\textbf{Fuel Cost} = \frac{\textbf{Miles Driven}}{\textbf{MPG}} \times \textbf{Price of Fuel}$$

In words: Fuel cost *equals* miles driven *divided* by mpg and *multiplied* by the price of fuel.

You may be able to use these comparisons to raise an important question if a customer complains about getting **slightly** lower fuel economy than expected: **Does it really matter all that much?** If the customer is driving an Escort, for example, the answer might very well be, **no.** If the customer is operating a delivery truck, the answer could easily be, **yes.**

TB-5964-A

Figure 3

Fuel Economy Wrap-Up

FUEL COST AT $1.00/GAL FOR A PASSENGER CAR DRIVEN 12,000 MILES		FUEL COST AT $1.00/GAL FOR A HEAVY TRUCK DRIVEN 12,000 MILES		FUEL COST AT $1.00/GAL FOR A HEAVY TRUCK DRIVEN 100,000 MILES	
MPG	COST	MPG	COST	MPG	COST
20	$600	4	$3,000	4	$25,000
21	$571	5	$2,400	5	$20,000
22	$545	6	$2,000	6	$16,667
23	$522	7	$1,714	7	$14,286
24	$500	8	$1,500	8	$12,500
25	$480	9	$1,333	9	$11,111
26	$462	10	$1,200	10	$10,000
27	$444				
28	$429				
29	$414				
30	$400				

Operating Cost And MPG

TB-5966-A

Figure 4

EPA City Driving Checklist

EPA CITY TEST CONDITIONS

Cold start
Warm spring day — temperature of 68°F to 86°F
7.5 mile trip
Route mostly level
Trip time 23 minutes
18 stops with approximately 4 minutes of idle time
Moderate acceleration
Average speed 20 mph
Maximum speed of 55.6 mph (for 2 seconds)
Driver only — no additional weight or modifications to the vehicle

CUSTOMER'S OPERATING CONDITIONS (Check conditions that apply)	COMMENTS
☐ Colder driving conditions	Will lower mpg
☐ Hotter driving conditions	Will lower mpg
☐ Longer city driving trips	May improve mpg
☐ Shorter city driving trips	Will lower mpg
☐ Hilly	Will lower mpg
☐ Fewer stops on average	Will improve mpg
☐ More stops on average	Will lower mpg
☐ Abrupt acceleration	Will lower mpg
☐ Constantly working the accelerator	Will lower mpg
☐ Higher average speed	Will lower mpg
☐ Higher maximum speed	Will lower mpg
☐ Heavy loads	Will lower mpg
☐ Accessories that produce drag	Will lower mpg
☐ Frequent trailer tow	Will improve mpg
☐ Lock-up/electronic transmission	May lower mpg
☐ Other than specified tires	Will lower mpg
☐ Tire pressure incorrect	May lower mpg
☐ Infrequent oil change	Will lower mpg
☐ Out of tune	

TB-5966-A

Figure 5

EPA Highway Driving Checklist

EPA HIGHWAY TEST CONDITIONS

Hot start
Warm spring day — temperature of 68°F to 86°F
10 mile trip
Route a mixture of rural and interstate roads — gently rolling
Trip time (?) minutes
No stops — little idle time
Light acceleration
Average speed 48 mph
Maximum speed of 55.6 mph
No additional weight or modifications to the vehicle

CUSTOMER'S OPERATING CONDITIONS (Check conditions that apply)	COMMENTS
☐ Colder driving conditions	Will lower mpg
☐ Hotter driving conditions	Will lower mpg
☐ Longer trips	May improve mpg
☐ Shorter trips	Will lower mpg
☐ Hilly	Will lower mpg
☐ Fewer stops on average	Will improve mpg
☐ More stops on average	Will lower mpg
☐ Abrupt acceleration	Will lower mpg
☐ Constantly working the accelerator	Will lower mpg
☐ Higher average speed	Will lower mpg
☐ Higher maximum speed	Will lower mpg
☐ Heavy loads	Will lower mpg
☐ Accessories that produce drag	Will lower mpg
☐ Frequent trailer tow	Will lower mpg
☐ Lock-up/electronic transmission	Will improve mpg
☐ Other than specified tires	May lower mpg
☐ Tire pressure incorrect	Will lower mpg
☐ Infrequent oil change	May lower mpg
☐ Out of tune	Will lower mpg

TB-5967-A

Figure 6

Fuel Economy Wrap-Up

FACTORS AFFECTING FUEL ECONOMY

Fuel provides the power to move a load against forces that resist that movement. If a route were all downhill, you could coast, using no fuel at all. Real life is rarely that easy. A fuel efficient vehicle is one that has the horsepower to get the job done, while overcoming the resistances that stand in the way. Fuel economy can be looked at in two ways:

1. **Generating the power to move down the road.** This involves three factors:
   a. The **horsepower** the vehicle needs to overcome **resistance.**
   b. The **efficiency** of the engine in generating the needed horsepower.
   c. Horsepower to **accelerate.**
2. **How the vehicle is operated.** How the vehicle is operated is the owner/operator's responsibility. It plays a major role in fuel economy.

Resistance and Horsepower

For a good understanding of the relationship between resistance and horsepower, the following equation for the horsepower (**HP**) needed for a **particular speed** is very helpful.

$$HP = \frac{[V \times .01 \times R \times GVW] + [V^2 \times C \times A]}{375 \times \text{Efficiency}}$$

In words, this equation reads: The horsepower needed to achieve a particular speed *equals* the speed (**V**) *times* resistance (**R**) *times* the gross vehicle weight (**GVW**) *plus* the speed squared (**V^2**) *times* coefficient of drag (**C**) *times* frontal area (**A**). These results are *divided* by an **efficiency** factor.

This equation is simpler than it looks. Let's go through it step-by-step:

The two numbers, **.01** and **375**, are included in the formula to make the results come out as horsepower. They aren't directly necessary for an understanding of the basic formula.

TB-5968-A

Figure 7

Fuel Economy Wrap-Up

Mechanical Factors

In the first part of the equation
[V x .01 x R x GVW]:

V is the speed the vehicle is operating at in mph.

R is **rolling resistance + grade resistance.**

Rolling resistance refers to the nature of the road surface. It takes more horsepower to maintain a given speed in soft sand than it does on dry pavement. It is interesting to compare rolling resistance to grade resistance. **The illustration below** shows the effect of different surfaces as if they were hills to climb. For example: Driving on sandy dirt is like climbing a 3.75% grade.

Grade resistance refers to hills. On a hill, it takes more horsepower to maintain a given speed than on level ground.

GVW you are all familiar with. It's the **G**ross **V**ehicle **W**eight — the weight of the vehicle and everything in it.

In this equation, **V, R, GVW** and the **.01** are all multiplied together. This gives you the mechanical factors that determine how much horsepower you need to achieve the desired speed. If you **double the speed**, you **double the effect** of these mechanical factors.

ROLLING RESISTANCE

ROAD SURFACE		ROLLING RESISTANCE EQUIVALENT GRADE %
CONCRETE:	EXCELLENT	1
	GOOD	1.5
	POOR	2
ASPHALT:	EXCELLENT	1.25
	GOOD	1.75
	POOR	2.25
HARD PACKED STONE:	EXCELLENT	1.5
	GOOD	2.25
	POOR	3.75
SNOW:	2"	2.5
	4"	3.75
DIRT:	SMOOTH	2.5
	SANDY	3.75
MUD:		3.75-15

Rolling Resistance As Grade

TB-5969-A

Figure 8

Fuel Economy Wrap-Up

Aerodynamic Factors

Now we need to add in the aerodynamic resistance factors. They are represented by ***[V² x C x A]***.

"C" is an ***AIR RESISTANCE FACTOR!*** It is a combination of C_d and the ***density of the air***. Air density varies somewhat with temperature and pressure. To compute the horsepower needed for speed in our equation, you should use the following value for ***C***:

$C = .002 \times C_d$

Note: Air resistance isn't a significant factor below 25 mph.

C_d is the coefficient of drag. It is a measure of the "sleekness" of the shape of an object and how well a fluid/gas flows over/around it.

A stands for the frontal area. ***The illustration at right*** shows that the frontal areas of the three vehicles are different. You might think that the greater the frontal area, the higher the overall resistance, but this isn't always true. Drag and frontal area have to be considered together. Vehicles A and C have about the same frontal area, but C has a lower drag coefficient, so the overall resistance is lower.

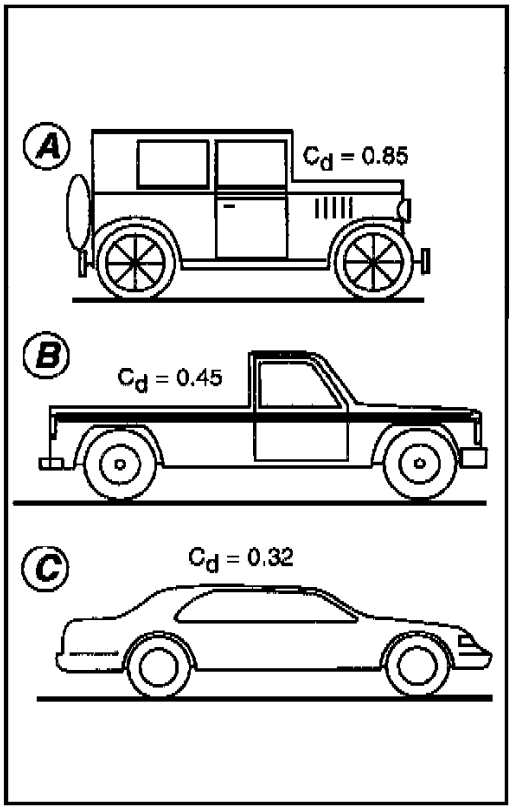

Coefficient Of Drag

TB-5970-A

Figure 9

Fuel Economy Wrap-Up

The Illustration in Figure 11 shows an extreme example of frontal area plus drag. The light truck caps being carried on this truck and trailer present a lot of flat fronts to the wind, creating lots of turbulence. Even though the load is light, aerodynamic resistance is very high and fuel economy is very low.

Returning to the formula, V^2 is the desired speed squared. This means **V x V**!

V^2 x C x A tells us something very important. As speed increases, aerodynamic resistance increases even faster! Let's see why that is. Looking at the speed (**V**) alone, let's compare **V** and V^2 at 55 and 65 mph, and at 65 mph driving into a 15 mph headwind.

$55^2 = 3025$

$65^2 = 4225$. This is a **40%** increase in resistance (from speed alone) as a result of only a 10 mph increase in speed (from 55 to 65 mph).

Now let's add in the headwind. 65 mph plus a 15 mph headwind produces a speed of 80 mph **through the air**. $80^2 = 6400$. With the headwind, the speed component of the aerodynamic resistance has increased an **additional 51%** over 65 mph with no headwind. Comparing an 80 mph air speed (65 mph + 15 mph headwind) to 55 mph, results in three times the resistance for a 25 mph increase in air speed.

As you can see, the resistance due to speed alone goes up very rapidly. Added to this is the resistance due to aerodynamic drag and frontal area. To overcome all this resistance, more horsepower is needed, which, in turn, reduces the fuel economy. Anyway you look at it, higher speeds result in lower fuel economy.

Going back to the formula, we see that all these factors we are talking about are divided **by 375 x Efficiency**. As we said before, 375 is a number that is included to make the answer come out in horsepower. What is **Efficiency**? In this case, it is a number (often around **.85**) that represents **drivetrain** efficiency. The amount of available horsepower from the engine is reduced somewhat as it passes through the drivetrain. Modern electronically controlled, lock-up automatic transmissions have increased the efficiency of the drivetrain, leaving more of the engine horsepower available to move the load.

This equation can be applied to any operating condition. For example, it can be used to calculate the horsepower needed to move an off-road vehicle at 25 mph through soft sand. If this is an important objective in the design of the vehicle, the equation will indicate how much horsepower must be available from the engine under these conditions.

TB-5971-A

Figure 10

Fuel Economy Wrap-Up

Extremely High Resistance

Horsepower and Acceleration

The equation we have just discussed is for a **steady** speed. Additional horsepower must be available for starting up and accelerating during operation. Sudden acceleration requires a lot of fuel and can greatly impact fuel economy.

Air Conditioning

There are some misconceptions about the effect on fuel economy from operating a vehicle's air conditioner. At freeway speeds, it may be more economical to have the windows closed and the A/C running than to operate with the windows open. Open windows at high speeds produce significant drag which may reduce fuel economy more than running the air conditioning system with the windows closed.

At low speeds, such as in city traffic, open windows don't significantly increase drag. Running the A/C under these conditions may affect fuel economy.

HOW THE VEHICLE IS OPERATED

Putting the Owner/Operator In the Picture

Throughout this series we have focused primarily on engineering and design factors that have an impact on fuel economy. Government regulations and fuel availability concerns have driven these efforts. Your customers need to be aware that they also play a major role in achieving good fuel economy. Smooth operation goes a long way to maximizing fuel economy. This means driving at moderate (and appropriate) speeds, accelerating smoothly and avoiding sudden starts and stops.

TB-5972-A

Figure 11

Fuel Economy Wrap-Up

Vehicle Speed

It should already be clear from the horsepower formula discussed earlier that high speeds result in poor fuel economy. Rapid acceleration is also a factor. Putting the pedal to the metal uses a lot of fuel. Studies show that operating a vehicle in a smooth, moderate way can save up to 10% on fuel consumption.

Weight and Accessories

It is clear from the horsepower formula that certain accessories and excessive weight will also reduce fuel economy significantly. Accessories include luggage racks and light bars that increase wind resistance. Trailers also contribute a lot of frontal area that results in increased wind resistance.

Heavily loading a vehicle or towing a trailer will sharply reduce fuel economy. Doing both together just compounds the problem. If the customer is carrying or towing heavy loads all the time, he or she needs to understand that they cannot expect good fuel economy. If you are aware that the vehicle is being loaded beyond the designed limits, you should point out that this is a potentially dangerous practice.

Tires

Tires are a significant factor in fuel economy. Properly inflated, O.E.M. tires are part of the vehicle's overall design. Underinflated tires result in significantly lower fuel economy, as well as poor or potentially dangerous handling. Replacement tires that do not meet manufacturer's specifications can also result in lower fuel economy.

TB-5973-A

Figure 12

Fuel Economy Wrap-Up

Oil

The right grade of high quality oil is, first of all, a critical part of good vehicle maintenance. The oil should be changed at least as often as manufacturer specifications call for. Certain oil grades contribute to fuel economy. In many vehicles, SAE 5W-30 oil improves fuel economy compared to higher viscosity oils. Follow manufacturer recommendations when it comes to changing oil. To assure the highest quality, select oil that displays the new API certification trademark (**below**).

CORRECTABLE VEHICLE-RELATED FACTORS

If a customer complains of sharply lower fuel economy, question him or her carefully. Make sure that their driving habits and the vehicle's loading have remained the same. Check for any new accessories that might be increasing resistance. If there are no apparent changes in operating conditions, you can look for service related concerns:

- Check that tires are the right type and inflated properly.
- Check the transmission or transaxle for slipping.
- Routine maintenance such as new plugs or timing adjustment may be required.
- Sensors or actuators may be malfunctioning. Look for diagnostic trouble codes.
- Check for brake drag.
- Check the thermostat. It may not be closing, or it may have been replaced with an incorrect thermostat. Either way, if the engine doesn't come up to designed operating temperature, fuel economy will suffer.
- Check that the emission control system is functioning properly.
- In extreme cases, there may be base engine problems such as worn piston rings.
- In very rare situations, the EEC may be functioning in "Limp Home" mode. This default setting allows the vehicle to be driven, but gas mileage will suffer.

THE TOTAL PICTURE

This series on fuel economy has allowed us to look at modern vehicle systems in a special way. Improving fuel economy involves almost every aspect of vehicle design from the shape of the body; to the design of the engine; to where the tires meet the road. Good fuel economy means that all these systems are working together properly. It also means that owner/operators are doing their part. Helping your customers achieve this desirable goal provides a valuable service.

AMERICAN PETROLEUM INSTITUTE
FOR GASOLINE ENGINES
CERTIFIED

The New API Certification Trademark

TB-5974-A

Figure 13

ACTION
Refer to the Figures of this TSB. Consult this TSB and share with customers to improve their understanding of fuel economy factors.

OTHER APPLICABLE ARTICLES: NONE

SUPERSEDES: 97-6-8

WARRANTY STATUS: INFORMATION ONLY

OASIS CODES: 622000, 690000

Remote Keyless Entry System - Service Highlights

Article No.
93-24-12

REMOTE KEYLESS ENTRY SYSTEM - 1992-1994 SERVICE INFORMATION HIGHLIGHTS - FACTORY AND DEALERSHIP INSTALLED UNITS

FORD:
1992-94 CROWN VICTORIA, PROBE, TAURUS, THUNDERBIRD

LINCOLN-MERCURY:
1992-94 CONTINENTAL, COUGAR, GRAND MARQUIS, SABLE, TOWN CAR
1993-94 MARK VIII

LIGHT TRUCK:
1991-94 EXPLORER
1992-94 ECONOLINE

ISSUE:
This TSB article highlights and clarifies Remote Keyless Entry (RKE) system information about factory and dealership installed components. The following items are covered in this article:

^ Locations Of RKE Programming Connectors

^ Ordering Additional RKE Transmitters

^ RKE Transmitter Battery Replacement

^ RKE Personality Feature

^ Obtaining Factory Installed Replacement Transmitters With Personality Feature

^ Reprogramming RKE Transmitters

^ Factory Versus Dealer Installed RKE Systems

^ Warranty Procedures

^ Hotline Help

ACTION:
Review the following information to become more familiar with the various features, operation and service of the Ford Remote Keyless Entry System.

LOCATIONS OF RKE PROGRAMMING CONNECTORS

Some questions have been received concerning the location of the program connector for the RKE systems on Taurus and Sable Wagons, Thunderbird and Explorer. The EVTM and Service Manual incorrectly identify the location of these connectors.

^ Taurus/Sable Sedan - The program connector is located on the left hand side (driver's side) of the trunk on the support frame, behind the interior body trim, next to the inertia switch.
^ Taurus/Sable Wagon - The program connector is located on the rear left hand side (driver's side) of the cargo area (near wheel well), behind the interior body trim (spare tire cover). The connector is taped to the wire assembly about 6" to 8" (152 to 203 mm) from the RKE module. Removal of the module may facilitate in accessing the connector.

^ Thunderbird/Cougar - The program connector is located on the rear left hand side (driver's side) of the trunk (near wheel well), behind the interior body trim. The connector is attached to the plastic relay tray that also houses the RKE module. The connector can be accessed without removing the plastic relay tray.

^ Explorer - The program connector is located on the rear left hand side (driver's side) of the cargo area (near wheel well), behind the interior body trim. The connector is taped to the wire assembly about 6" to 8" (152 to 203 mm) from the RKE module. Removal of the module may facilitate in accessing the connector.

ORDERING ADDITIONAL RKE TRANSMITTERS

When any additional transmitter(s) are purchased for a vehicle, the cost of the transmitter(s) and any costs associated with programming the transmitters to the vehicle are not warranty chargeable.

RKE TRANSMITTER CHART		
VEHICLE	TRANSMITTER PART NUMBER	TRANSMITTERS PROVIDED BY FACTORY
Probe	F3UZ-15K601-A	1
Econoline	F3UZ-15K601-A	2
Taurus Sedan, Taurus Wagon, Crown Victoria**, Thunderbird	F4DZ-15K601-A	1
Sable Sedan, Sable Wagon, Grand Marquis, Cougar	F34Y-15K601-A	1
Continental, Town Car, Mark VIII	F4OY-15K601-A	2
Explorer***	F3UZ-15K601-A	2
Vehicles Equipped with Personality Feature (Memory Seat)		
Mark VIII, Continental	F4OY-15K601-A - Transmitter #1 F4OY-15K601-B - Transmitter #2	2 (one of each number)

(**) Crown Victoria vehicles have two (2) factory transmitters available as a running change in the 1993 model year.

(***) Supplemental Remote Transmitters for the 93 1/2 Premium Explorer may not be found on some parts lists.

The RKE Transmitter Chart lists the part numbers of all factory-installed RKE transmitters and the number of transmitters. Refer to this chart for the correct part number. Please note that transmitters are handled through normal stock orders, not via special order programs.

RKE TRANSMITTER BATTERY REPLACEMENT

In 1993 a change was made to the Remote Transmitter for the RKE system. The battery contacts have been reengineered. It is important that you are able to identify the differences for battery removal and replacement. The following outlines the procedure for both types of transmitters and how to identify them.

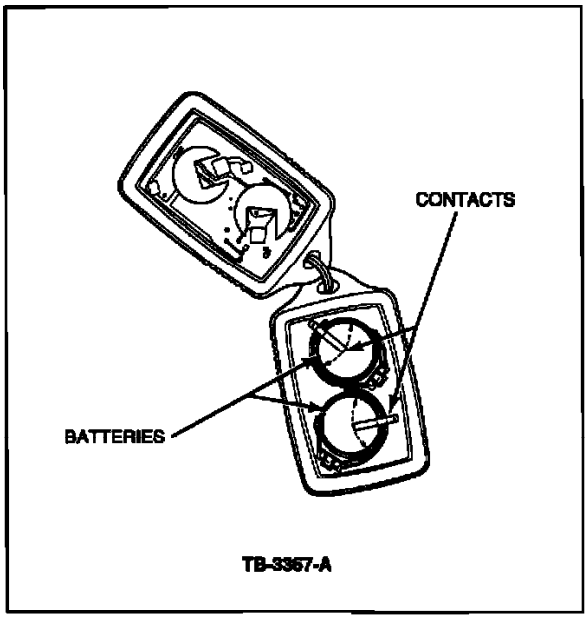

Figure 1

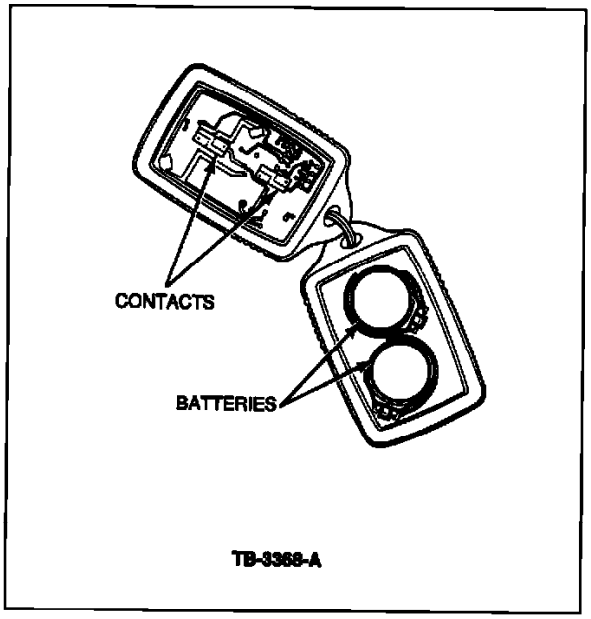

Figure 2

The differences in the two (2) are shown in Figures 1 and 2. To remove the battery, determine what type of transmitter you have and refer to the following appropriate procedure.

"SWING ARM" CONTACTS - (Figure 1)

1. Snap apart the transmitter case by twisting a coin between the edges of the front and rear halves.

2. Carefully swing the contacts off the batteries and remove the discharged batteries.

3. Install the new batteries.

NOTE:
BATTERIES MUST BE INSTALLED WITH THE POSITIVE SIDE TOWARD THE BOTTOM OF THE TRANSMITTER CASE.

4. Swing the contacts over the top of the batteries.

5. Snap the two halves of the transmitter case back together.

"CIRCUIT BOARD" CONTACTS - (Figure 2)

1. Snap apart the transmitter case by twisting a coin between the edges of the front and rear halves.

2. Remove the discharged batteries.

3. Install the new batteries.

NOTE:
BATTERIES MUST BE INSTALLED WITH THE POSITIVE SIDE TOWARD THE BOTTOM OF THE TRANSMITTER CASE.

4. Snap the two halves of the transmitter case back together.

Replacement batteries for the Remote Transmitters are not available through FCSD, but can be obtained at most local stores that sell photo, calculator and/or watch batteries. The transmitters use a battery industry standard No. 2016 - 3 volt. The alternative battery manufactured sources are Duracell # CR2016; Radio Shack # CR2016H or # BR2016H; and Sony # CR2016.

RKE PERSONALITY FEATURE

Recently, questions have been raised about the operation of the RKE system and the Personality Module (Memory Seat Feature) operation. The following information will assist technicians and customers in understanding these features.

This information is in the 1993 2nd printing Owner Guide and is also located in the Service Manuals. Please instruct customers on the proper operation of these systems and direct them to the Owner Guide for further information.

Memory Seat Feature

^ Vehicles with RKE and Memory Seat allow the RKE to control the Programmed Memory Seat. Pressing the transmitter "unlock" button unlocks the driver's door and adjusts the seat position to the preprogrammed position for that specific transmitter.

^ The RKE system handles up to four (4) transmitters (of which only three memory seat positions can be set).

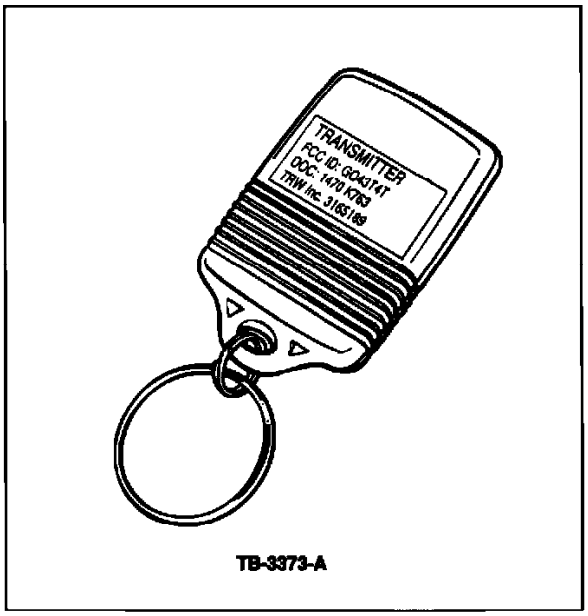

Figure 7

^ The two factory supplied transmitters are numbered on the back to identify the transmitters ("Transmitter 1" and "Transmitter 2"), Figure 7. The transmitter number corresponds to the memory seat position (i.e. transmitter 1 is for seat position 1, transmitter 2 is for seat position 2, and a third transmitter can be used for seat position 3).

^ When setting the seat position, be sure that the memory seat position number is programmed to the corresponding transmitter number.

NOTE:
IF TRANSMITTERS MUST BE REPROGRAMMED, THE FIRST TRANSMITTERS REPROGRAMMED WILL BECOME # 1, THE SECOND PROGRAMMED WILL BECOME # 2, ETC., REGARDLESS OF THE NUMBER ON THE BACK OF THE TRANSMITTER.

DISABLING THE FEATURE

You may Toggle off (disable) the Personality Feature for the Memory Seat Function using the Keyless numerical pad. To deactivate the Memory Seat feature, proceed as follows:

1. Enter your permanent five digit entry code (NOT the user code you have programmed).

2. Within 5 seconds, press and hold 7/8.

3. Within 5 more seconds, press and release 5/6.

4. Release 7/8.

5. To reactivate, repeat the instructions.

LOSS OF MEMORY SEAT SETTING

Loss of system power to the Memory Seat module will erase the Memory Seat information. Once power is re-established, the module sets the memory seat program to the current seat position (at the time of power up) for all three memory selections.

OBTAINING FACTORY INSTALLED REPLACEMENT TRANSMITTERS (WITH PERSONALITY FEATURE)

Replacement transmitters (also used as additional transmitters) with personality features come with the # 1 and # 2 identified on the back (F40Y-15K601-A and F40Y-15K601-B, respectively). Transmitters with personality feature cannot be ordered with # 3 and # 4 on the back of the transmitter (or as a generic "no number" unit).

REPROGRAMMING RKE TRANSMITTERS

When reprogramming the RKE system with two or more transmitters, follow the Service Manual procedures as outlined. However, when reprogramming you must program all transmitters at the same time. You cannot reprogram a single transmitter on a multiple transmitter system.

FACTORY VERSUS DEALER INSTALLED RKE SYSTEMS

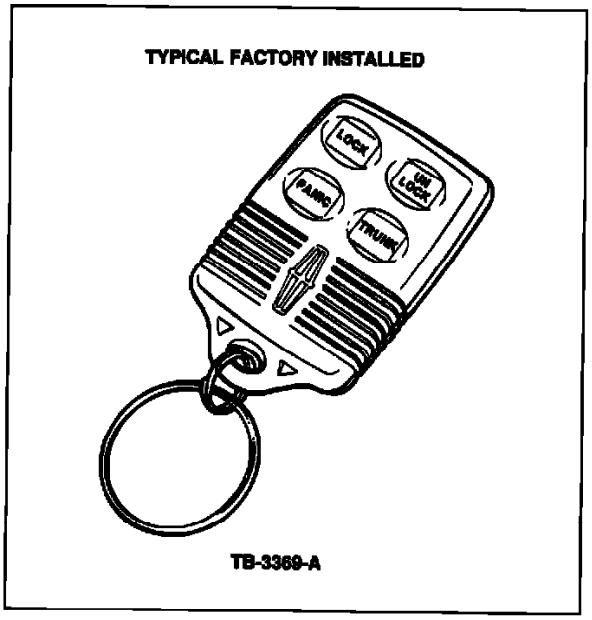

Figure 3

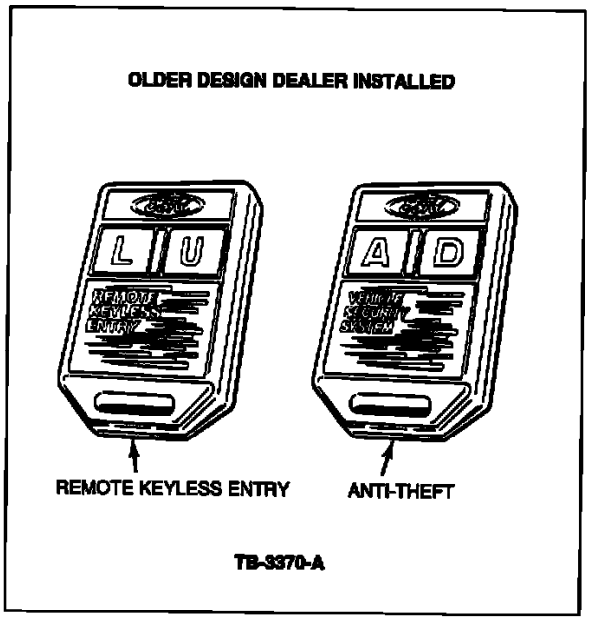

Figure 4

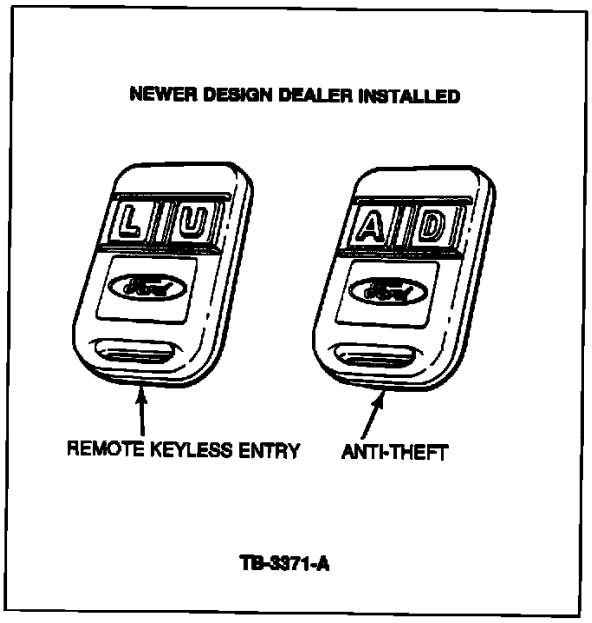

Figure 5

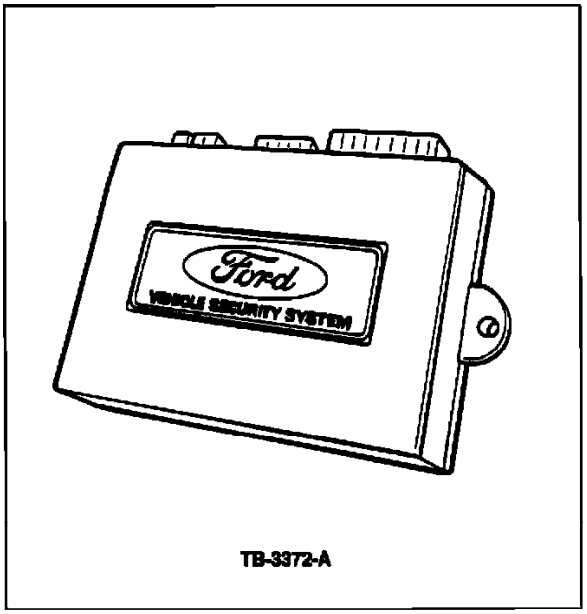

Figure 6

Ford factory installed systems are designed specifically for the vehicle that they are installed into, Figure 3. FCSD supplies a dealer installed RKE system that can be installed on all Ford and Lincoln/Mercury vehicles, Figures 4, 5, 6. This system is maintained by FCSD. Warranty data and material should be directed to the proper area when repairs warrant replacement.

NOTE:
PLEASE BE SURE TO FOLLOW THE PROPER WARRANTY PROCEDURES FOR THE TYPE OF RKE SYSTEM YOU ARE WORKING ON.

WARRANTY PROCEDURES - DEALER INSTALLED RKE SYSTEM

All Ford Security and Keyless Entry Systems are warranted for 12 months or 12,000 miles (or the remainder of the new vehicle warranty), against defects in material and/or workmanship. Claims for new product to replace defective parts are made as follows:

The dealer representative must call the Ford VSS Dealer Service Department at 1-800-FORD-KEY (1-800-367-3539).

NOTE:
SERVICE PARTS MAY BE STOCKED AT THE DEALERSHIP. HOWEVER, REPLENISHMENT OF SERVICE STOCK CAN ONLY BE ACCOMPLISHED BY CONTACTING THE FORD VEHICLE SECURITY SYSTEM DEALER SERVICE DEPARTMENT FOR AN APPROPRIATE PARTS CLAIM.

1. Identify the defective component (not the entire kit).

2. The dealer will receive a warranty claim number for defective component.

3. A part number will be sent to the Dealer within 24 hours.

4. The dealer will tag defective part with warranty claim number and hold the part for pick-up by the manufacturer's representative.

5. A Ford Remote System representative will pick up the defective part within 30 days. The dealer may scrap the part if not picked up in 30 days.

6. Claims should be made on form 1863 for LABOR ONLY.

HOTLINE HELP

When requesting help on an RKE system, verify the system being serviced and call the appropriate Hotline number as listed below:

Factory Installed RKE Systems: 1-800-461-6945

Ford Dealer-Installed RKE Systems: 1-800-FORD KEY

PART NUMBER	PART NAME	CLASS
F3UZ-15K601-A	Transmitter	B
F4DZ-15K601-A	Transmitter	C
F34Y-15K601-A	Transmitter	B
F4OY-15K601-A	Transmitter	B
F4OY-15K601-B	Transmitter	B

Parts Block

OTHER APPLICABLE ARTICLES: NONE
SUPERSEDES: 93-4-3
WARRANTY STATUS: INFORMATION ONLY
OASIS CODES: 108000, 112000, 205000

Technical Service Bulletin # **9443** Date: **940223**

Remote Keyless Entry System - Service Tips

Article No.
94-4-3

02/23/94

REMOTE KEYLESS ENTRY SYSTEM - SERVICE TIPS

FORD:
1993-94 CROWN VICTORIA, PROBE, TAURUS, THUNDERBIRD

LINCOLN-MERCURY:
1992-94 CONTINENTAL
1993-94 COUGAR, GRAND MARQUIS, MARK VIII, SABLE, TOWN CAR

LIGHT TRUCK:
1992-94 ECONOLINE
1993-94 EXPLORER
1994 BRONCO, F SUPER DUTY, F-150-350 SERIES

This TSB article supplements TSB 93-24-12. It is being published to show the latest Remote Keyless Entry parts information and to include F-150-350 Series vehicles in the model application and parts lists.

ISSUE:
This TSB article highlights and clarifies Remote Keyless Entry (RKE) system service information that is often overlooked due to unfamiliarity with this new RKE feature.

ACTION:
Review the following information to become more familiar with the various features, operation and service of the Ford Remote Keyless Entry System.

The following items are covered in this article:

^ Transmitter Programming Procedures

^ Programming Service Information

^ Ordering Additional RKE Transmitters

^ RKE Transmitter Service Part Numbers

TRANSMITTER PROGRAMMING PROCEDURES

Transmitters should be programmed according to the procedure that is outlined in the appropriate Service Manual, Section 01-14B.

PROGRAMMING SERVICE INFORMATION

The following information clarifies some commonly misunderstood Ford factory-installed RKE system features that affect servicing the system.

^ Each Ford RKE transmitter contains an individual non-resettable code. When programmed, the RKE module retains the transmitter's code in its memory.

^ The Ford RKE module (receiver) can be programmed to operate with up to four (4) transmitters.

^ When additional transmitters are programmed or if reprogramming is necessary, all transmitters for that vehicle must be programmed (or reprogrammed) at the same time. If the programming mode is entered and a transmitter or transmitters are not programmed (or reprogrammed) at the same time, they will not operate with the system.

ORDERING ADDITIONAL RKE TRANSMITTERS

When additional transmitter(s) are purchased for a vehicle, the cost of the transmitter(s) and costs associated with programming the transmitters to the vehicle are not covered by warranty.

RKE TRANSMITTER SERVICE PART NUMBERS - 1992-94 MODELS

RKE TRANSMITTER CHART		
VEHICLE	TRANSMITTER PART NUMBER	TRANSMITTERS PROVIDED BY FACTORY
Probe	F3UZ-15K601-A	1
F-150-350 Series, F-Super Duty, Econoline, Bronco	F3UZ-15K601-A	2
Taurus Sedan, Taurus Wagon, Crown Victoria**, Thunderbird	F3DZ-15K601-A	2
Sable Sedan, Sable Wagon, Grand Marquis, Cougar	F34Y-15K601-A	2
Explorer***	F3UZ-15K601-A	2
Vehicles Equipped With Personality Feature (Memory Seat) Mark VIII, Continental	F4OY-15K601-A - Transmitter # 1 F4OY-15K601-B - Transmitter # 2	2 (one of each number)

(**) Crown Victoria vehicles will have two (2) factory provided transmitters available as a running change in the 1993 model year.

(***)Supplemental Remote Transmitters for the 1993-1/2 Explorer Limited may not be found on some parts lists.

The RKE transmitter chart lists the part numbers of all factory installed RKE transmitters and the number of the transmitters. Refer to this chart for the correct part number. Please note that the transmitters are handled through normal stock orders, not via special order programs.

NOTE:
ALL 1994 MODEL YEAR VEHICLES WITH THE EXCEPTION OF THE PROBE WILL HAVE TWO (2) FACTORY TRANSMITTERS.

PART NUMBER	PART NAME	CLASS
F3UZ-15K601-A	Transmitter	B
F3DZ-15K601-A	Transmitter	B
F34Y-15K601-A	Transmitter	C
F4OY-15K601-A	Transmitter #1	B
F4OY-15K601-B	Transmitter #2	B

Parts Block

OTHER APPLICABLE ARTICLES: 93-24-12
WARRANTY STATUS: INFORMATION ONLY
OASIS CODES: 108000, 112000, 205000

Technical Service Bulletin # **97-24-13** Date: **971124**

Remote Keyless Entry - Diagnostic Service Tips

Article No.
97-24-13

11/24/97

REMOTE KEYLESS ENTRY (RKE) - DIAGNOSTIC SERVICE TIPS

FORD:
1993-97 PROBE, THUNDERBIRD
1993-98 CROWN VICTORIA, TAURUS
1994-98 MUSTANG
1995-98 CONTOUR
1997-98 ESCORT

LINCOLN-MERCURY:
1992-98 CONTINENTAL
1993-97 COUGAR
1993-98 GRAND MARQUIS, MARK VIII, SABLE, TOWN CAR
1995-98 MYSTIQUE

1993 Ford Probe L4-121 2.0L DOHC VIN A MFI

1997-98 TRACER

LIGHT TRUCK:
1992-98 ECONOLINE
1993-98 EXPLORER
1994-96 BRONCO
1994-98 F SUPER DUTY, F-150-350 SERIES
1995-98 RANGER, WINDSTAR
1996-98 VILLAGER
1997-98 EXPEDITION, MOUNTAINEER
1998 NAVIGATOR

This TSB article is being republished in its entirety to include other models and revise procedure.

ISSUE:
The Remote Keyless Entry (RKE) system may be inoperative. This may be caused by several different items.

CROSS REFERENCE PROCEDURES - FIGURES FOR RKE PROGRAMMING							
Vehicle	**1992**	**1993**	**1994**	**1995**	**1996**	**1997**	**1998**
Continental	H - Fig. 3	H - Fig. 3	H - Fig. 3	C - Fig. 1	C - Fig. 1	C - Fig. 1	C - Fig. 8
Contour/Mystique				I - Fig. 3	I - Fig. 3	I - Fig. 3	I - Fig. 3
Escort/Tracer Wagon						D - Fig. 2	A - Fig. 5
Escort/Tracer Sedan						D - Fig. 3	A - Fig. 5

CROSS REFERENCE PROCEDURES - FIGURES FOR RKE PROGRAMMING (Continued)							
Vehicle	1992	1993	1994	1995	1996	1997	1998
Escort/Tracer Coupe						D - Fig. 3	D - Fig. 3, or for vehicles built after 8/97 use A - Fig. 5
Crown Vic/Grand Marq		H - Fig. 3	H - Fig. 3	C - Fig. 1	C - Fig. 1	C - Fig. 1	L - Fig. 7
Mark VIII		H - Fig. 3	H - Fig. 3	H - Fig. 3	H - Fig. 3	C - Fig. 1	C - Fig. 8
Mustang			B - Fig. 3	B - Fig. 3	B - Fig. 3	B - Fig. 3	B - Fig. 3
Probe		G - Fig. 2	G - Fig. 2	G - Fig. 2	G - Fig. 2	G - Fig. 2	
Taurus/Sable		B - Fig. 3	B - Fig. 3	B - Fig. 3	D - Fig. 3	D - Fig. 3	A - Fig. 5
Thunderbird/Cougar		B - Fig. 3	B - Fig. 3	B - Fig. 3	B - Fig. 3	B - Fig. 3	
Town Car		H - Fig. 3	H - Fig. 3	C - Fig. 1	C - Fig. 1	C - Fig. 1	K - Fig. 5
Econoline	F - Fig. 2	F - Fig. 2	F - Fig. 2	F - Fig. 2	F - Fig. 2	F - Fig. 2	F - Fig. 2
Expedition						D - Fig. 2	A - Fig. 6
Navigator							A - Fig. 6
Explorer		B - Fig. 2	B - Fig. 2	D - Fig. 2	D - Fig. 2	D - Fig. 2	A - Fig. 6
Mountaineer						D - Fig. 2	A - Fig. 6
F-Series			J - Fig. 2	J - Fig. 2	J - Fig. 2	D - Fig. 2	A - Fig. 6
Bronco			J - Fig. 2	J - Fig. 2	J - Fig. 2		
Ranger				D - Fig. 2	D - Fig. 2	D - Fig. 2	A - Fig. 6
Villager					E - Fig. 4	E - Fig. 4	E - Fig. 4
Windstar				H - Fig. 2	H - Fig. 2	H - Fig. 2	D - Fig. 2, or for vehicles built after 9/97 use A - Fig. 6

TYPE 1

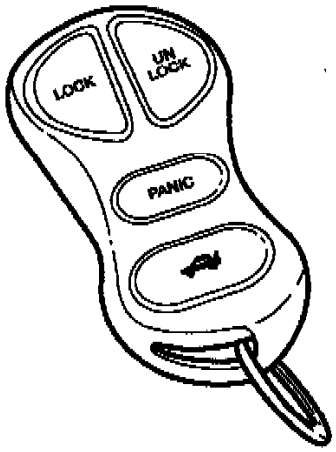

Figure 1

TB-5336-A

TYPE 2

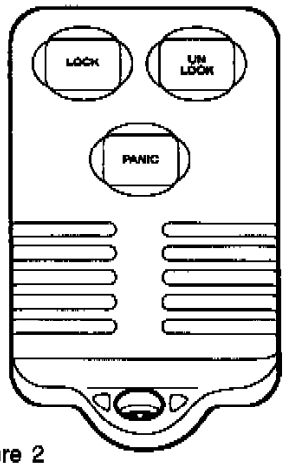

Figure 2

TB-5337-A

TYPE 3

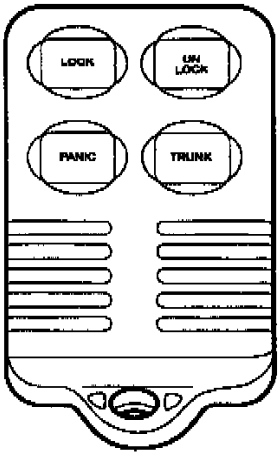

Figure 3

TB-5338-A

TYPE 4

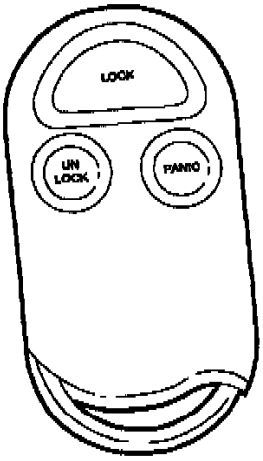

Figure 4

TB-5339-A

TYPE 5

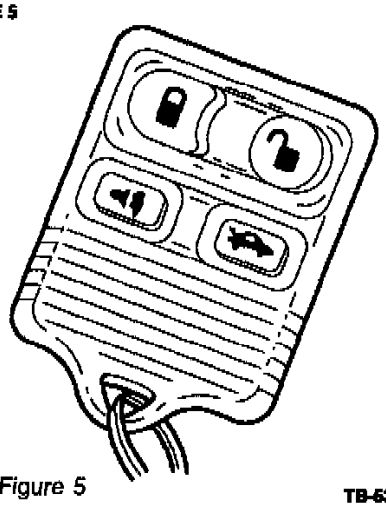

Figure 5

TB-5340-A

TYPE 6

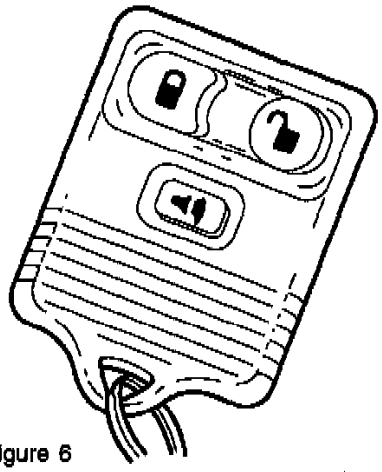

Figure 6

TB-5341-A

TYPE 7

• GRAY

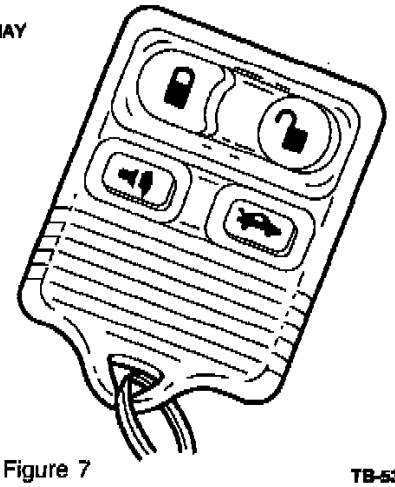

Figure 7

TB-5342-A

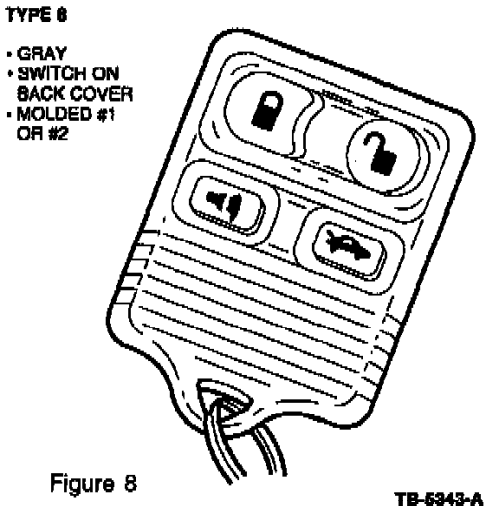

Figure 8

ACTION:
Refer to the Diagnostic Chart and text for tips on servicing customer concerns with the RKE system.

NOTE:
WHEN SERVICING THE RKE SYSTEM, THE VEHICLE SHOULD BE IN THE FOLLOWING STATE: THE IGNITION SHOULD BE IN THE OFF POSITION AND ALL LIGHT SWITCHES MUST BE IN THE OFF POSITION. ISOLATE THE VEHICLE SO THAT NO RKE TRANSMITTERS ARE OPERATED WITHIN AN 18 METER (60 FT) RADIUS.

WARNING:

^ WHEN PROGRAM MODE HAS BEEN ENTERED, ANY TRANSMITTER FUNCTIONED WITHIN 30 METERS (98 FEET) OF THE VEHICLE CAN GET PROGRAMMED TO THAT VEHICLE AND IN THE PROCESS ERASE OUT ALL PREVIOUSLY STORED TRANSMITTER CODES.

^ TYPE 2 AND TYPE 3 TRANSMITTERS ARE INTERCHANGEABLE.

^ TYPE 1, 7, AND 8 ARE INTERCHANGEABLE.

^ TYPE 5 AND TYPE 6 ARE INTERCHANGEABLE.

^ TYPE 4 IS UNIQUE AND CANNOT BE USED ON ANY OTHER VEHICLE.

OTHER APPLICABLE ARTICLES: 93-24-12

SUPERSEDES: 97-19-8

WARRANTY STATUS: INFORMATION ONLY

OASIS CODES: 112000, 203000, 203200, 204000, 205000

Reference Procedure Steps For RKE Programming

TROUBLESHOOTING COMMON CONCERNS		
Concern	**Possible Cause**	**Repair**
1st transmitter functions correctly and 2nd transmitter inoperative for all functions	Battery in transmitter	Replace battery (NO NEED TO REPROGRAM THE MODULE).
	Transmitter was inadvertently de-programmed from remote entry module	Using New Generation Star (NGS) Tester, confirm only one (1) Transmitter Identification Code (TIC) in memory. Reprogram all transmitters. If NGS is unavailable, check battery first. If OK, then reprogram all transmitters and see if it functions.
	Faulty transmitter	Replace faulty transmitter and reprogram all transmitters at the same time.

TROUBLESHOOTING COMMON CONCERNS (Continued)		
Concern	**Possible Cause**	**Repair**
1st transmitter functions correctly and 2nd transmitter inoperative for some functions (e.g., lock function will not work properly) **NOTE: NO PROGRAMMING OF TRANSMITTERS IS NECESSARY.**	Faulty transmitter	Using NGS Tester, confirm each button on problem transmitter responds with proper function code (Lock, Unlock, Panic, or Trunk). If the one button does not respond, replace the transmitter and reprogram all transmitters.
Both transmitters inoperative for all functions	Transmitter was inadvertently de-programmed from remote entry module	Using NGS Tester, confirm there are NO Transmitter Identification Codes (TICs) in memory that match 1st and 2nd transmitters. Reprogram all transmitters.
	Antenna - loose connection (1997 only)	Properly reconnect/install external antenna.
	Wrong transmitters used with remote entry module. Refer to the WARNING at the end of these Diagnostic charts.	Be sure proper model year system is installed on the vehicle.
	Interference from high power or radio frequency devices (radio towers power lines, headlamp switch ON, etc.)	Move vehicle away (at least 30 meters (98 feet)) from device and retest for proper functionality.
	Wiring to remote entry module	Confirm remote entry module battery line at 12V; remote entry ground and ignition lines at 0V. Check fuses.
	Faulty remote entry module	Using NGS Tester, confirm both Transmitter Identification Codes (TICs) provided with vehicle match what is stored in memory. If so, and transmitters do not work, replace the module and reprogram transmitters.

TROUBLESHOOTING COMMON CONCERNS (Continued)		
Concern	**Possible Cause**	**Repair**
Reduced range of performance (must walk up to vehicle before transmitter will function) **NOTE: NO PROGRAMMING OF TRANSMITTERS NECESSARY.**	Loose antenna connection (1997)	Properly reconnect/install external antenna.
	Interference from high power or radio frequency devices (radio towers power lines, headlamp switch ON, etc.)	Move vehicle away (at least 30 meters (98 feet)) from device and retest for proper functionality.
Vehicle will not enter program mode	Program procedure not performed correctly	Verify correct procedure is used. **NOTE: IT IS DIFFICULT TO TURN IGNITION FROM "OFF" TO "RUN" ON ESCORT/TRACER MANUAL TRANSMISSION VEHICLES DUE TO IGNITION LOCK FEATURE.**
	Wiring to remote entry module	Confirm remote entry battery line at 12V, ground at 0V, and the ignition transitions from 0 to 12 volts before performing programming procedure. Check fuses.
	Interference from high power or radio frequency devices (radio towers power lines, headlamp switch ON, etc.)	Move vehicle away (at least 30 meters (98 feet)) from device and retest for proper functionality.

TROUBLESHOOTING COMMON CONCERNS (Continued)		
Concern	**Possible Cause**	**Repair**
Trunk function of both transmitters inoperative, but other functions (lock/unlock/panic) work correctly **NOTE: NO PROGRAMMING OF TRANSMITTERS IS NECESSARY.**	Trunk latch solenoid inoperative or missing (misbuild)	Inspect connections to latch and retest. Replace trunk latch if necessary.
	Wiring to solenoid/relay/remote entry module	Verify proper wiring to these components. Correct any issues found.
	Trunk release/liftgate unlock relay malfunction	Diagnose relay. Reattach or replace as needed.
Lock/unlock function of both transmitters inoperative, but other functions (panic/trunk) working correctly	Loose power door lock actuator connection	Remove door trim and attach power door lock actuator.
	Lock/unlock relay malfunction	Remove door trim and diagnose relay. Reattach or replace as needed.
	Wiring to remote entry module/to Relay	Verify wiring is correct and has no chafing.
Panic function of both transmitters inoperative, but other functions (lock/unlock, trunk) work correctly **NOTE: NO PROGRAMMING OF TRANSMITTERS IS NECESSARY.**	Wiring to parklamps/horn relay/remote entry module	Check horn pad on steering wheel for proper horn activation. If everything works fine, check wiring from remote entry module to horn relay. Verify parklamps wiring are good. Correct any concerns found.
	Horn relay malfunction	Diagnose relay. Reattach or replace as needed.
	Headlamps/Parklamps relay malfunction	Diagnose relay. Reattach or replace as needed.
	In and out of Panic issue ("have a hard time turning off panic alarm")	Reroute antenna assembly for better reception or press panic button in between horn chirps (issue corrected with 1998 model year vehicle's remote entry system).

Troubleshooting Common Concerns

A. Cycle ignition from OFF to RUN or ACC eight (8) times within 10 seconds, ending in RUN or ACC. All doors will lock then unlock to confirm programming mode. Press any button on 1st remote transmitter. Door locks will cycle to confirm programming. Press any button on 2nd transmitter (up to 4 transmitters total possible). Turn ignition to OFF. The door locks will lock then unlock to confirm programming.

NOTE:
ESCORT/TRACER WITH SINGLE DOOR REMOTE ENTRY SYSTEMS WILL CYCLE THE DRIVER'S DOOR LOCK ONLY.

B. Turn ignition to RUN or ACC. Momentarily jump pins in programming connector located in left rear quarter panel area. All doors will lock then unlock to confirm programming mode. Press any button on 1st transmitter. Door locks will lock then unlock to confirm programming. Press any button on 2nd transmitter (up to 4 transmitters total possible). The door locks will lock then unlock to confirm programming. Turn ignition to OFF. Locks will again cycle to indicate end of programming mode.

C. Enter 5-digit permanent entry code into the keyless entry keypad. Within 5 seconds of pressing last button of code, press the 1/2 button. All doors will lock then unlock to confirm programming mode. Press any button on 1st transmitter within 5 seconds of pressing the 1/2 button. Locks will cycle to indicate successful programming. Press any button on 2nd transmitter (up to 4 transmitters total possible) within 5 seconds of previous transmitter (if keypad light goes out before all transmitters are programmed, the process must be repeated). Press the 7/8 and 9/0 buttons simultaneously on keypad to exit program mode.

D. Cycle ignition from OFF to RUN or ACC five (5) times within 10 seconds, ending in RUN or ACC. All doors will lock then unlock to confirm programming mode. Press any button on 1st remote transmitter. Door locks will cycle to confirm programming. Press any button on

2nd transmitter (up to 4 transmitters total possible). Turn ignition to OFF. The door locks will lock then unlock to confirm programming.

E. Enter vehicle, close and lock all doors. Insert and remove key from ignition six (6) times within 10 seconds. Instrument panel lights will flash to indicate original code has been erased. Turn ignition to the ACC position. Press LOCK button on 1st transmitter. Instrument panel lights will flash to confirm programming. To enter additional transmitters, unlock, then lock the doors using the power lock switch located on the driver door. Press LOCK button on additional transmitter (up to 4 transmitters total possible). Instrument panel lights will flash to confirm programming. Turn ignition to OFF.

F. Turn ignition to RUN or ACC. Jump pins in programming connector located at the base of the steering column for entire programming mode procedure. All doors will lock then unlock to confirm programming mode. Press any button on the 1st transmitter. Door locks will cycle to confirm programming. Press any button on 2nd transmitter (up to 4 transmitters total possible). Turn ignition to OFF. The door locks will lock then unlock to confirm programming. Remove jumper used with programming connector.

G. Turn ignition to RUN or ACC. Momentarily jump pins in programming connector located in right rear quarter panel area. All doors will lock then unlock to confirm programming mode. Press any button on 1st transmitter. The door locks will lock then unlock to confirm programming. Press any button on 2nd transmitter (up to 4 transmitters total possible). Turn ignition to OFF. The door locks will lock then unlock to confirm programming.

H. Turn ignition to RUN or ACC. Momentarily jump pins in programming connector located behind glove compartment. All doors will lock then unlock to confirm programming mode. Press any button on 1st transmitter. The door locks will lock then unlock to confirm programming. Press any button on 2nd transmitter (up to 4 transmitters total possible). Turn ignition to OFF. The door locks will lock then unlock to confirm programming.

I. Turn ignition to RUN or ACC. Momentarily jump pins in programming connector located behind glove compartment. The horn will chirp to confirm programming mode. Press any button on 1st transmitter. The horn will chirp to confirm programming. Press any button on 2nd transmitter (up to 4 transmitters total possible). The horn will chirp to confirm programming. Turn ignition to OFF. The horn will chirp one last time to indicate end of programming mode.

J. Turn ignition to RUN or ACC. Momentarily jump pins in programming connector located at the base of the steering column. All doors will lock then unlock to confirm programming mode. Press any button on 1st transmitter. The door locks will lock then unlock to confirm programming. Press any button on 2nd transmitter (up to 4 transmitters total possible). Turn ignition to OFF. The door locks will lock then unlock to confirm programming.

K. Cycle ignition from OFF to RUN or ACC four (4) times within 3 seconds, ending in RUN or ACC. All doors will lock then unlock to confirm programming mode. Press any button on 1st remote transmitter. Door locks will cycle to confirm programming. Press any button on 2nd transmitter within 7.5 seconds (up to 4 transmitters total possible). Turn ignition to OFF or wait 7.5 seconds. All doors will lock then unlock to confirm programming mode.

L. Diagnostic method of programming transmitters is as follows:

1. Choose Service Bay Functions from the service function card.

2. Choose Driver Door Module (DDM).

3. Choose Key Fob Programming.

4. Press any button on the remote entry transmitter.

5. Choose Fob 1, 2, 3, or 4 and press Store.

6. Repeat Step L4 for additional transmitters.

7. Press Cancel to get out of menu (you may have to press Cancel twice).

NOTE:
FOR FUTURE VEHICLE STRATEGIES, THESE PROGRAM PROCEDURES WILL BE COMMONIZED.

Technical Service Bulletin # **03-18-1** Date: **030915**

Keyless Entry System - Service Tips

Article No.
03-18-1

09/15/03

ELECTRICAL - REMOTE KEYLESS ENTRY (RKE) -
SERVICE TIPS

FORD:
1993-1997 PROBE, THUNDERBIRD

1993 Ford Probe L4-121 2.0L DOHC VIN A MFI

1993-2004 CROWN VICTORIA, TAURUS
1994-2004 MUSTANG
1995-2000 CONTOUR
1997-2002 ESCORT
2000-2004 ESCORT ZX2, FOCUS
2002-2004 THUNDERBIRD
1992-2004 E SERIES
1993-2004 EXPLORER
1994-1996 BRONCO
1994-2003 WINDSTAR
1995-2004 RANGER
1997-2004 EXPEDITION, F SUPER DUTY
2000-2003 EXPLORER SPORT
2000-2004 ESCAPE, EXCURSION
2001-2004 EXPLORER SPORT TRAC
2004 FREESTAR
1994-2004 F SERIES

LINCOLN:
1992-2002 CONTINENTAL
1993-1998 MARK VIII
1993-2004 TOWN CAR
2000-2004 LS
1998-2004 NAVIGATOR
2002-2003 BLACKWOOD
2003-2004 AVIATOR

MERCURY:
1993-1997 COUGAR
1993-2004 GRAND MARQUIS, SABLE
1995-2000 MYSTIQUE
1997-1999 TRACER
1999-2002 COUGAR
1997-2004 MOUNTAINEER

ISSUE
This article offers clarification on the most common Remote Keyless Entry (RKE) conditions encountered during service.

ACTION
Refer to the following Service Tips to aid in diagnosing common RKE conditions.

OTHER APPLICABLE ARTICLES: NONE

WARRANTY STATUS: INFORMATION ONLY

OASIS CODES: 112000

NOTE: The information in Technical Service Bulletins is intended for use by trained, professional technicians with the knowledge, tools, and equipment to do the job properly and safely. It informs these technicians of conditions that may occur on some vehicles, or provides information that could assist in proper vehicle service. The procedures should not be performed by "do-it-yourselfers". Do not assume that a condition described affects your car or truck. Contact a Ford, Lincoln, or Mercury dealership to determine whether the Bulletin applies to your vehicle.

Disclaimer

Remote Entry System Diagnosis

1. Electronically unlock the vehicle (i.e., using the transmitter, keypad or power lock switch on the door) prior to attempting to diagnose the vehicle via Service Tools or entering Remote Entry System Programming Mode. Most newer model year systems (2002 and beyond) require this action before function is operational.

2. If extreme poor range performance is experienced:

   a. DO NOT change batteries on Remote Entry transmitters (Range does not change as battery ages).

   b. DO NOT replace or reprogram Remote Entry transmitters (Range is determined primarily by the receiver) If only one of the transmitters experience poor range, but not all, then it is OK to replace the bad transmitter and reprogram ALL transmitters back to vehicle.

   c. Verify external antenna is connected (if applicable).

   d. Ensure the poor performance is not only in certain locations. Examples; by radio stations or TV transmitting towers, power generators, etc.

e. Ensure no other aftermarket/dealer installed devices are mounted on vehicle (especially systems operating at same frequency, 315MHz). If aftermarket/dealer installed systems are present, disconnect them and check FMC OEM system for proper operation.

f. Ensure poor performance is consistent in nature and not just from one approaching angle from or to the vehicle.

g. Poor performance is most likely the cause of a remote entry receiver, not a remote entry transmitter issue.

3. If there are other functional issues with the Remote Entry system:

a. First determine if the Remote Entry system is OEM or aftermarket (dealer installed systems with Ford Logo are still considered aftermarket). Please note this fact in repair claim.

b. Ensure correct Remote Entry devices (transmitters, keypad) are used with vehicle. This can be verified via part number or RKE Job Aid which can be viewed from the PTS or QCdealer websites. Even if the part has a Ford Logo, ensure it is one pictured on the on Job Aid. If not listed on RKE Job Aid then it is an aftermarket or dealer installed device and should be diagnosed and binned accordingly.

c. Ensure there are no aftermarket Systems on the vehicle. Examples: Remote Start, Perimeter Alarm, Charging Cell Phones. Charging Coolers, etc) If so, please note this fact on repair claim for easy identification. Disconnect aftermarket system and check OEM system for normal operation.

d. Continue with normal repair procedures.

4. If the RF device (transmitter or wireless keypad) requires a battery replacement there is NO need to reprogram the device back to the vehicle.

5. If any one button, yet not all buttons on the Remote Entry device operates, there is NO need to reprogram the device back to vehicle. Follow normal repair procedures for inoperative function.

6. Be aware that before entering Remote. Entry program mode:

a. First electronically Unlock the vehicle.

b. Have ALL RF devices (transmitter. wireless keypads) present at the time of entering procedure. Most Remote Entry systems only allow up to 4 devices. Thus. if these other RF devices (wireless keypads) are added, it should be noted that the number of locations to store extra transmitters will be reduced. Inform the customer of this.

c. Ensure no other vehicles within 50 meters of a vehicle entering program mode are attempting to enter program mode also or are activating any RF functions (transmitters / wireless keypad). This could cause cross programming, mis-programming or loss of programmed transmitters/wireless keypads from memory.

d. Recall that once the first RF device is programmed to the vehicle. ALL other devices stored in memory get erased using the manual key cycling method to enter program mode. If service tools are used to enter program mode (on vehicles equipped with feature), the technician has the opportunity to add just one transmitter/wireless keypad to memory without erasing all others

e. Verify how many devices are actually stored in memory before entering this procedure. This can be accomplished via diagnostic tools. If you do not receive ALL devices that are currently programmed to vehicle from customer at time of repair, inform the customer that when the devices provided are reprogrammed to vehicle none of the other devices left at home will operate the vehicle any longer. They should be referred back to their Owner's Guides for the manual programming procedure to reprogram ALL their devices to the vehicle again on their own. This should eliminate repeat repairs in the future.

f. If all Remote Entry devices are not provided at time of repair, entrance into program mode via service tools is preferred over the manual programming procedure (if equipped on vehicle). Diagnostic programming allows individual RF devices to be added or it can be used to replace specific devices currently in memory and does NOT have to erase ALL devices currently stored in memory which would render those left at home inoperative.

g. Be aware of difficulty of cycling the ignition between OFF and RUN on some manual transmission vehicles due to the ignition lock feature. It may be easier (if applicable) to cycle the ignition from OFF to ACC, rather than RUN (example, older Crown Vic/Grand Marquis)

7. Be aware on older Model Year Town Car and Crown Vic/Grand Marquis Vehicles, there is a higher chance of inadvertently entering program mode by only cycling the ignition from OFF to RUN two times by accidentally bypassing OFF and going all they way to ACC. If the customers complain their door locks cycled intermittently or their transmitters no longer work, it could mean they entered program mode inadvertently at some time. Transmitters that no longer work with vehicle can be easily determined if they are still programmed to the vehicle via diagnostic tools (Function Mode).

8. Refer to the Remote Entry Job Aid located on PTS and QCDealer websites or the 2 laminated versions sent to each dealership for appropriate programming procedures and transmitters to be used for every Model Year vehicle.

9. If the vehicle is experiencing issues with the Keys or Passive Anti-Theft System (aka SecuriLock(TM)), these issues should be binned to:

a. L23 for keys

b. -15607- or L14 for PATS transceiver

c. L14 for PATS control

10. If customers complain of inadvertent activations, determine if the following is the cause:

    a. Ask customer if they programmed their transmitters to other family vehicles. If so, inform them if a transmitter is activated within 50 meters of both vehicles, it will perform the function on both vehicles. (Also, note that a trunk release button on one vehicle may be a liftgate glass release function on another vehicle).

    b. For Liftgate Glass release activations, check OASIS to determine if there are any applicable SSM or TSBs. Some 2002-2003 Explorer 4DR, Mountaineer and Aviator vehicles built prior to 04/04/2003, may exhibit backglass rattle/noise or high effort when closing. Due to this issue, one may find that while driving down the road or when parked, their liftgate glass is ajar. For these vehicles, first make sure the glass is closed with enough force to fully latch.
    NOTE: Allowing the glass to fall on its own is not sufficient force for proper closure. The condition may also be due to tolerance stack-up between the backglass to body dimensions and latch position. To service Explorer 4DR and Mountaineer, first remove the backglass latch assembly. Second, drill the body side latch mounting bolt hole 2 mm larger (from 7 mm to 9 mm diameter, or 23/64"). Additionally, for Aviator, replace the backglass overslam bumpers with revised part number W708031-5300. **NOTE**: Replacement of the latch is not necessary.

11. Crown Vic/Grand Marquis vehicles do not have feedback implemented to mark the ending of transmitter programming, the ignition key must be turned to OFF and there must be a 10-20 second wait to get out of programming mode. If the recently programmed transmitter(s) is tested before this time out expires, it may not work and technician may think it did not program at all

Keyless Entry System (Wired or Wireless)

1. If issues are experienced with Keyless Entry keypad operation (located on driver door):

    a. Look for any signs of water intrusion.

    b. Look for proper wiring connections/connector seating.

    c. Check for proper keypad backlighting by pressing a button to verify the light turns on.

    d. Most vehicles equipped with a keypad incorporate a security feature called Anti-scan mode. Inform customer they have 7 attempts at inputting a valid keycode before the keypad will be locked out for one minute. (Only the lock function operates while in this mode). This one minute anti-scan mode is indicated by the keypad light flashing rapidly.

2. On 2004 Heavy Duty F-Series repairs, note that the vehicle is released with a new wireless keypad (RF). If the wireless keypad or any remote transmitter requires programming, ALL devices must be present and programmed during the same programming procedure. Wireless keypad repairs must not be binned to the remote transmitter part number (15K601).

3. If the RF device (transmitter or wireless keypad) requires a battery replacement, there is NO need to reprogram the device back to vehicle.

Remote Entry or Other Feature Operation

1. Many questions have been raised about the RKE system and the Memory Seat feature association. The following information is here to explain the 3 different versions of "personality" Refer to these methods used to associate transmitters to memory seat/mirrors/pedal/steering column positions:

    a. When transmitters are initially programmed to vehicle, the first transmitter will automatically recall memory position # 1. The second transmitter programmed will automatically recall memory position # 2. Remember, transmitters no longer have # 1 and # 2 labels on them and the customer should be told which transmitter was the first and second to be programmed. Or at least inform the customer how their system operates so there is no confusion. The transmitters cannot be disassociated with this implementation. (Example Windstar).

    b. When the transmitters are programmed to vehicle, no automatic association to the memory seat/mirror/pedal/steering column positions will occur until set by the dealer or customer. The association of transmitters to the vehicle can be accomplished by pressing the Set button, followed by a button activation from the transmitter, followed by the memory position (1 or 2) the customer wishes to have it set to. The transmitters in this scenario can be disassociated if the customer wishes by pressing the Set memory switch, any button on the keyfob/transmitter and the Set memory switch again. (Example Town Car and LS).

    c. The third personality implementation is just like "b" except the transmitters are associated to the vehicle when initially programmed. However, the customer or dealer may change those settings following the steps laid out in "b" Again, with this implementation, the transmitters may be disassociated from the vehicle.

2. Most (2001 & newer) vehicles equipped with Remote Entry, now allow Lock and Unlock functions to operate with the ignition on. However, flashing of exterior lights or sounding (chirps) of horn will not operate with the key turned to RUN or START.

3. On some 2001 and beyond vehicles, there is a feature called Power Door Lock Disable which becomes active 20 seconds after the vehicle is

electronically locked. The feature disables the interior power door lock switches. This feature is used to prevent access into the vehicle if a moonroof or window is open and someone attempts to place a stick through the window to unlock the vehicle via the interior trim switch. The interior power door lock switches become operational again once the vehicle is electronically unlocked or a door becomes ajar. If the customer complains of intermittent interior power door lock functionality check to see if this feature is configured ON. If so, inform the customer of this feature and that it can be disabled if the customer wishes to change the configuration (refer to Owner's Guide). If not, pursue normal diagnosis.Technical Service Bulletin # **94168** Date: **940810**

Power Door Locks/Windows - Inoperative

Article No.
94-16-8

08/10/94

^ LOCKS - POWER - INOPERATIVE DUE TO CORROSION AT WIRING HARNESS CONNECTOR

^ WINDOWS - POWER LOCKS - INOPERATIVE DUE TO CORROSION AT WIRING HARNESS CONNECTOR - VEHICLES BUILT 4/16/92 THROUGH 4/25/94

FORD:
1993-94 PROBE

ISSUE:
Some vehicles may exhibit a loss of some or all power accessories to either front door. This can occur on some vehicles if the door electrical wiring harnesses are corroded at the connector located in the "A" pillar after extensive accumulation of mileage. Electrical systems such as power windows, power door locks and power mirrors may malfunction. This occurs because water enters the connector.

ACTION:
Check the electrical system fuses and check for a corroded connector at the "A" pillar. If the connector is corroded, replace the connector with a new pigtail connector.

INSPECTION PROCEDURE

1. Check for any blown fuses.

2. Disconnect the negative battery cable.

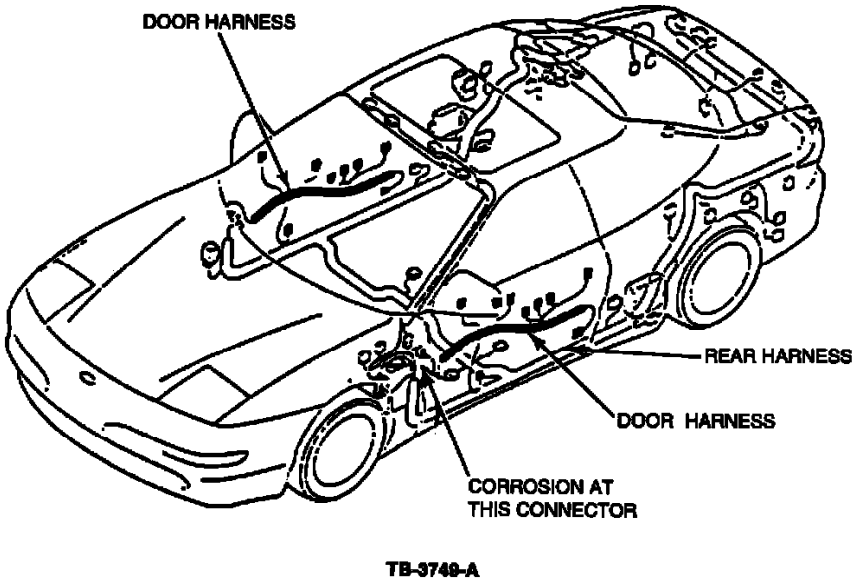

Figure 1

3. Inspect the condition of the "A" pillar electrical connector. Refer to Figure 1.

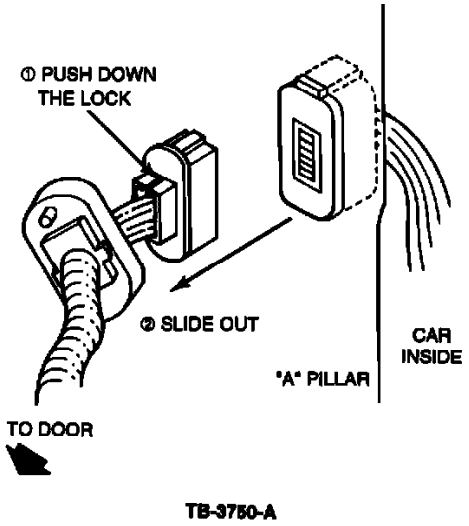

Figure 2

NOTE:

TO DISCONNECT THE SHELLS, PUSH DOWN THE LOCK LOCATED AT THE TOP OF THE CONNECTOR SHELL AND SLIDE OUT THE DOOR HARNESS SIDE SHELL. REFER TO FIGURE 2.

4. If you find corrosion at the connector terminals, repair the connector by using the following repair parts.

REPAIR PROCEDURE

1. Inspect the connector and wire terminal condition of the DOOR side harness. Replace the door harness assembly with a new harness if necessary.

2. Inspect the connector and wire terminal condition of the BODY SIDE harness connector.

REPAIR KIT APPLICATION CHART	
Application	Part Numbers
Pigtail Connector - Driver Side	F42Z-14631-E
Pigtail Connector - Passenger Side	F42Z-14630-E

3. Repair the harness by using the appropriate pigtail from the Repair Kit Application Chart. If only one or two wire terminals are corroded and the connector shell does not have any damage, pull out the damaged wire terminals from the pigtail and replace the defective wires with new ones.

DRIVER'S SIDE

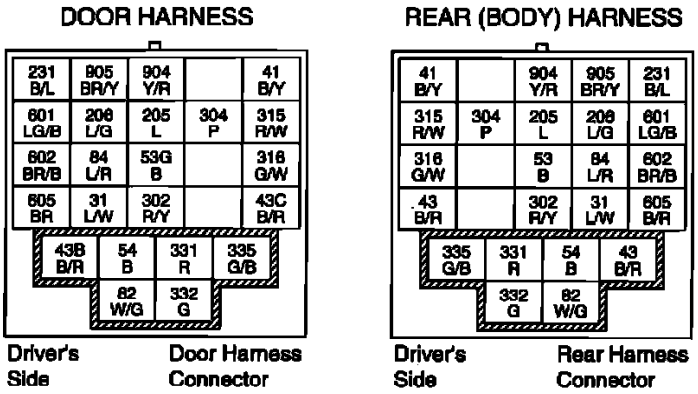

System	Applicable circuit				
Power mirror	31	601	602	605	
Power window	41	43	54	315	316
Power door lock	82	331	332	335	
Speaker	205	206			
Anti-theft	904	905			
Heated mirror	53	231			
Illumination	84	302	304		

PASSENGER SIDE

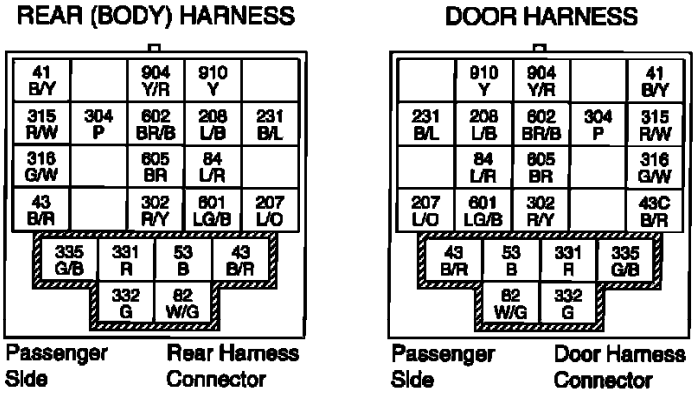

System	Applicable circuit			
Power mirror	601	602	605	
Power window	41	43	315	316
Power door lock	82	331	332	335
Speaker	207	208		
Anti-theft	904	910		
Heated mirror	53	231		
Illumination	84	302	304	

TB-3751-A

Figure 3

4. Refer to Figure 3 for proper wire arrangement.

NOTE:

USE BUTT-CONNECTORS TO CONNECT WIRES AND BUNDLE THE WIRES BY USING PLASTIC TAPE.

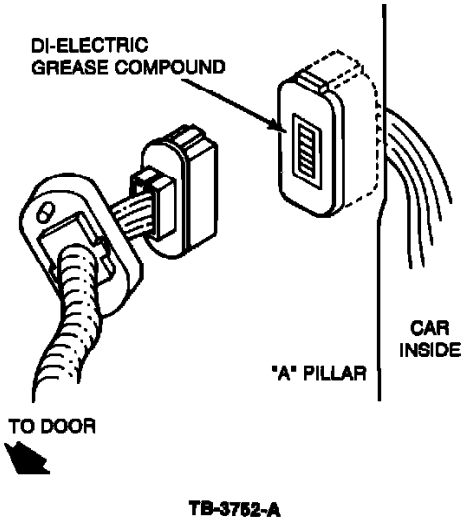

Figure 4

5. Apply some Di-Electric Grease Compound (D7AZ-19A331-A) inside the connector. Refer to Figure 4.

6. Install the connector.

NOTE:
BEFORE INSTALLING THE CONNECTOR, MAKE CERTAIN THAT THE RUBBER BOOT IS PROPERLY PLACED OVER THE DOOR HARNESS SIDE CONNECTOR SHELL.

7. Reinstall the negative battery cable and verify operation of all door accessories.

PART NUMBER	PART NAME	CLASS
F42Z-14631-E	LH Door Wire Harness Repair Kit	CG
F42Z-14630-E	RH Door Wire Harness Repair Kit	CG
D7AZ-19A331-A	Silicone Di-Electric Grease	A
Obtain Locally	Butt-Splice Connectors	-

Parts Block

OTHER APPLICABLE ARTICLES: NONE
WARRANTY STATUS:
Eligible Under The Provisions Of Bumper To Bumper Warranty Coverage

OPERATION	DESCRIPTION	TIME
941608AT	Inspect And Replace Door Side Harness Only (Both Sides)	1.2 Hrs.
941608A	Inspect And Replace Door Side Harness Only (One Side)	0.7 Hr.
941608B	Inspect And Repair Body Side Harness Only (Left)	0.6 Hr.
941608C	Inspect And Repair Body Side Harness Only (Right With A/C)	2.5 Hrs.
941608D	Inspect And Repair Body Side Harness Only (Right Without A/C)	2.1 Hrs.
941608E	Inspect And Replace Body Side Harness Connector (Left)	0.6 Hr.
941608F	Inspect And Replace Body Side Harness Connector (Right With A/C)	2.5 Hrs.
941608G	Inspect And Replace Body Side Harness Connector (Right Without A/C)	2.1 Hrs.
941608H	Inspect And Replace Door Side Harness And Replace Body Side Harness Connector (Left)	1.0 Hr.
941608I	Inspect And Replace Door	2.9 Hrs.

	Side Harness And Replace Body Side Harness Connector (Right With A/C)	
941608J	Inspect And Replace Door Side Harness And Replace Body Side Harness Connector (Right Without A/C)	2.5 Hrs.
941608K	Inspect And Replace Door Side Harness And Repair Body Side Harness (Left)	0.9 Hr.
941608L	Inspect And Replace Door Side Harness And Repair Body Side Harness (Right With A/C)	2.8 Hrs.
941608M	Inspect And Replace Door Side Harness And Repair Body Side Harness (Right Without A/C)	2.5 Hrs.

DEALER CODING

BASIC PART NO.	CONDITION CODE
14630	84

OASIS CODES:
102000, 103000, 112000, 203000, 203200, 205000

Technical Service Bulletin # **9486** Date: **940420**

Door Locks - Inoperative In Below Freezing Temperatures

Article No.: 94-8-6

LOCKS - DOOR - INOPERATIVE AT AMBIENT TEMPERATURES BELOW FREEZING - VEHICLES BUILT BEFORE 3/1/94

FORD:
1993-94 PROBE

ISSUE:
The door locks may freeze up at ambient temperatures below 320 F (0 degree C) and can not be unlocked. This occurs because water penetrates the door lock cylinder and freezes.

ACTION:
Apply some lock lubricant to both front door lock cylinders. Refer to the following procedure for service details.

1. Remove the door lock key cylinder from the door. Refer to the 1993/94 Probe Service Manual, Sections 01-05 and 01-14A, for removal procedure.

2. Using compressed air, carefully blow off any water trapped in the key cylinder.

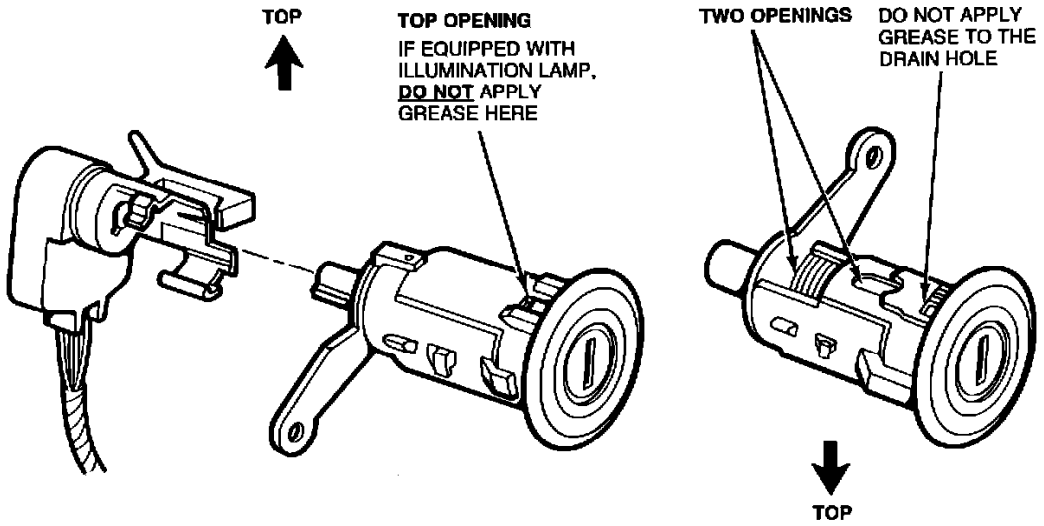

Figure 1

TB-3649-A

3. Apply lock lubricant (D8AZ-19587-AA) into the two openings shown in Figure 1.

NOTE:
ABOUT 0.6CC OF LOCK LUBRICANT PER CYLINDER SHOULD BE SUFFICIENT.

4. Reinstall the key cylinder in the door. Refer to the 1993/94 Probe Service Manual, Sections 01-05 and 01-14A, for installation procedure.

5. Confirm door lock cylinder operation.

6. Clean the grease off the key. Push the key in and out of the key cylinder several times to ensure that no excess grease is left.

PART NUMBER	PART NAME	CLASS
DBAZ-19587-AA	Lock Lubricant	B

OTHER APPLICABLE ARTICLES: NONE

WARRANTY STATUS:
Eligible Under 12 Months/12,000 Miles

OPERATION	DESCRIPTION	TIME
940806AT	Grease Both Door Lock Cylinder	0.6 Hr.
940806A	Grease One Door Lock Cylinder	0.4 Hr.

DEALER CODING

BASIC PART NO.	CONDITION CODE
7021984	41

OASIS CODES: 112000

Technical Service Bulletin # **94234** Date: **941114**

Paint - Preparation Procedure And MSDS Information

Article No.
94-23-4

11/14/94

PAINT - PRIMED SHEET METAL - PREP PROCEDURE AND MSDS INFORMATION

FORD:
1980 and after CROWN VICTORIA, ESCORT, MUSTANG, THUNDERBIRD
1982-88 EXP
1984 and after TEMPO
1986 and after TAURUS
1988-93 FESTIVA
1989 and after PROBE

1993 Ford Probe L4-121 2.0L DOHC VIN A MFI

LINCOLN-MERCURY:
1980 and after CONTINENTAL, COUGAR, GRAND MARQUIS, TOWN CAR
1981-87 LYNX
1984-92 MARK VII
1984 and after TOPAZ
1986 and after SABLE
1987-89 TRACER
1991-94 CAPRI
1993 and after MARK VIII

MERKUR:
1985-89 XR4TI
1988-90 SCORPIO

LIGHT TRUCK:
1980 and after F-150-350 SERIES
1981 and after ECONOLINE
1982 and after BRONCO
1983 and after RANGER
1984-90 BRONCO II
1986 and after AEROSTAR
1988 and after F SUPER DUTY
1991 and after EXPLORER
1993 and after VILLAGER
1995 WINDSTAR

MEDIUM/HEAVY TRUCK:
1980-91 C SERIES, CL-CLT-9000 SERIES
1980 and after F & B SERIES, L SERIES
1986 and after CARGO SERIES

ISSUE:
This procedure is being published to advise all body and paint technicians about proper procedures for preparation of sheet metal parts coated with electrodeposition primer (E-Coat).

ACTION:
When prepping a replacement body panel for installation, it is mandatory to leave the E-Coat intact. DO NOT SAND OFF THE E-COAT.

Improper preparation with excessive sanding of the E-Coat to bare metal will jeopardize the sheet metal warranty and overall customer satisfaction. In particular, the E-Coat is necessary to protect the parts from rust. Light scuff sanding using a Scotch Brite pad or wet 320 grit sand paper is recommended for minor flaws. If a minor flaw exists, wet sand or scuff out the flaw and prime the repair area. Again, do not remove all of the E-Coat from the panel.

CAS: 7439-92-1 ★★★★★★ **LEAD** ★★★★★★ **CHEMICAL FACT SHEET**

Chemical Names (Synonyms): Lead.

Inorganic Compound Names: Lead carbonate (CAS 598-63-0)
Lead chloride (CAS 7758-95-4)
Lead monoxide (CAS 1317-36-8)
Lead sulfide (CAS 1314-87-0)
and others.

Trade Names: C.I. Pigment Metal 4, C.I. 77575, Lead flake, Whole lead, Litharge, and others.

Uses: Tank linings, piping and other chemical reaction equipment; petroleum refining, manufacture of gasoline additives; pigments for paint; storage batteries, solder and fusible alloys; radiation shielding; and others.

PHYSICAL INFORMATION

Appearance: Bluish white to silvery gray solid (lead metal).

Odor: None.

Minimum Detectable by Odor: Unknown.

Behavior in Water: Insoluble.

Evaporation: Unknown.

HEALTH HAZARD INFORMATION

OSHA Standard: Average 8 hour exposure – 0.05 mg/m³ (lead).

Note: Current OSHA regulations require that if an individual has a blood-lead level greater than or equal to .060 mg lead per 100 ml blood, he must be removed from all exposures to lead and cannot return to an exposed environment until the blood level falls to .040 mg lead per 100 ml blood or less.

NIOSH Recommended Limit: Average 10 hour day/40 hour week exposure – .01 mg/m³ (lead).

ACGIH Recommended Limit: Average 8 hour exposure – 0.15 mg/m³ (lead).

Short Term Exposure:

Note: Lead is a cumulative poison. Increasing amounts build up in the body and eventually a point is reached where symptoms and disability may occur. Lead dust carried home on contaminated clothing can cause symptoms in other family members. Standards only protect for inhalation exposure. Extra precautions should be taken if skin exposure also occurs.

Inhalation: The effects of exposure to fumes and dusts of inorganic lead may not develop quickly. Symptoms may include decreased physical fitness, fatigue, sleep disturbance, headache, aching bones and muscles, constipation, abdominal pains, and decreased appetite. These effects are reversible and complete recovery is possible. Inhalation of large amounts of lead may lead to seizures, coma, and death.

TB-3995-A

Figure 1

HEALTH HAZARD INFORMATION (CONT'D.)

Skin: May cause irritation.

Eyes: May cause irritation.

Ingestion: See effects listed for inhalation. Ingestion of large amounts of lead may lead to seizures, coma, and death.

Long Term Exposure:

Lead can accumulate in the body over a period of time. Therefore, long term exposures to lower levels can result in a build up of lead in the body and more severe symptoms. These may include anemia, pale skin, a blue line at the gum margin, decreased handgrip strength, abdominal pain, severe constipation, nausea, vomiting, and paralysis of the wrist joint. Prolonged exposure may also result in kidney damage. If the nervous system is affected, usually due to very high exposures, the resulting effects include severe headache, convulsions, coma, delirium, and death. In non-fatal cases, recovery is slow and not always complete. Alcohol ingestion and physical exertion may bring on symptoms. Continuous exposure can result in decreased fertility. Lead exposure of either parent before pregnancy can increase the chances of miscarriage or birth defects. Exposure of the mother during pregnancy can cause birth defects.

EMERGENCY AND FIRST AID INSTRUCTIONS

Inhalation: Move victim to fresh air. Give artificial respiration, as needed. Get medical attention immediately.

Skin: Wash area with plenty of soap and water. Remove any contaminated clothing immediately.

Eyes: Rinse eyes with plenty of water for 15 minutes. Seek medical attention, if necessary.

Ingestion: If victim is conscious, give water. Seek medical attention.

Note to Physician: Whole blood lead levels, circulating plasma/erythrocyte lead concentration ratio, urine ALA, and erythrocyte protoporphyrin fluorescent microscopy may all be useful in monitoring or assessing lead exposure. Chelating agents such as edetate disodium calcium and penicillamine are generally useful in the therapy of acute lead intoxication.

PROTECTIVE MEASURES

Storage and Handling: Store in an area away from heat and keep separate from potassium.

Engineering Controls: Adequate ventilation, sinks, showers and eyewash stations should be provided.

Protective Clothing: Full body work clothing should be worn including bump caps or hard hats, rubber gloves, and eye protection. Employees should routinely wash their skin thoroughly and change clothing at the end of each work shift.

TB-3996-A

Figure 2

CAS: 7439-92-1 ★★★★★★ **LEAD** ★★★★★★ **CHEMICAL FACT SHEET**

PROTECTIVE MEASURES (CONT'D.)

Protective Equipment: For levels up to 0.5 mg/m³, use any dust and mist respirator, except single-use.

For up to 1 mg/m³, use any dust and mist respirator, except single-use or quarter mask, or any fume respirator or high efficiency particulate filter respirator.

For up to 5 mg/m³, use a high efficiency particulate filter respirator with a full facepiece.

For up to 100 mg/m³, use a powered air-purifying respirator with a high efficiency particulate filter or a Type C supplied-air respirator operated in pressure-demand or other positive-pressure or continuous-flow mode.

For up to 200 mg/m³, use a Type C supplied-air respirator with full facepiece operated in pressure-demand or other positive-pressure mode, or with a full facepiece, helmet or hood operated in continuous-flow mode.

For levels greater than 200 mg/m³, escape, or entry into unknown concentrations, use a self-contained breathing apparatus with full facepiece operated in pressure-demand or other positive-pressure mode or a combination respirator which includes a Type C supplied-air respirator with a full facepiece operated in pressure-demand or other positive-pressure or continuous-flow mode and an auxiliary self-contained breathing apparatus operated in pressure-demand or other positive-pressure mode.

Other Precautions: No eating, drinking, or smoking in areas where the dusts or fumes of lead or its compounds are present.

FIRE AND EXPLOSION INFORMATION

General: Not combustible. If exposed to fire, may release toxic fumes or sulfur and lead oxides.

Explosive Limits: Unknown.

Extinguisher: Use extinguisher appropriate to burning material. When fighting fire, wear a self-contained breathing apparatus with full facepiece and operated in positive-pressure mode.

REACTIVITY INFORMATION

Conditions to Avoid: Excessive heat.

Materials to Avoid: Reacts violently with potassium.

SOURCE: Chemical Fact Sheet as prepared by the Bureau of Toxic Substance Assessment, New York State Department of Health; modified by the Toxicology Department, Ford Motor Company.

TB-3997-A

Figure 3

WARNING:

LEAD CONTAMINATION POTENTIAL: THE ELECTRODEPOSITION PRIMER USED BY FORD MOTOR COMPANY OVER BASE METAL ON SERVICE REPLACEMENT PARTS OR COMPLETED VEHICLES CONTAINS SMALL AMOUNTS OF LEAD FOR CORROSION PROTECTION OF STEEL. EXCESSIVE DUSTS GENERATED BY UNNECESSARY AND IMPROPER SANDING MAY CONTAIN AIRBORNE LEAD CONTAMINATION IN EXCESS OF OSHA STANDARDS. INFORMATION REGARDING THE HAZARDS OF LEAD CAN BE FOUND IN THE CHEMICAL FACT SHEETS IN THE FIGURES IN THIS ARTICLE.

NOTE:

READ ALL INFORMATION IN THIS TECHNICAL SERVICE BULLETIN CAREFULLY AND FORWARD TO ALL EMPLOYEES PERFORMING PAINT PREPPING OPERATIONS. DEALERS SHOULD CONTACT LEGAL COUNSEL AND/OR LOCAL OSHA AUTHORITIES FOR DIRECTION REGARDING OSHA LEAD STANDARD REQUIREMENTS.

If a replacement body panel contains more than a minor flaw in the E-coat, it should be returned. Contact your Customer Service representative for instructions.

If more extensive sanding, other than that described above, is necessary, (e.g., refinishing original vehicle sheet metal) follow the procedures outlined below:

ALTERNATIVE SANDING PROCEDURES WHEN EXTENSIVE SANDING IS REQUIRED

The following procedures for sheet metal preparation by sanding or media blasting are based on tests conducted by Ford Motor Company in accordance with requirements set forth in the Federal OSHA Inorganic Lead Standard 29 CFR 1910.1025.

SANDING PROCEDURE

1. Each technician performing the sanding operation MUST wear an approved respirator with high efficiency particulate filter (HEPA).

2. Technicians should use dual action sander with vacuum collection.

3. The vacuum equipment MUST be equipped with a HEPA filter on the air exhaust. Dealers are cautioned not to exhaust vacuum air into the atmosphere. Operators are cautioned to follow the manufacturer's guidelines for maintenance and the replacement of filters.

MEDIA BLASTING PROCEDURE

1. Testing has shown that plastic media blasting meets OSHA lead standard requirements and is efficient when the manufacturer's published procedures are followed.

2. The operator must wear an air supplied hood using compressed air free from carbon monoxide, oil, water, and other contamination when performing this operation. Specifics of the media blasting procedure for whole body paint removal have been previously published.

NOTE:
PLEASE READ THE CHEMICAL FACT SHEETS IN THE FIGURES.

OTHER APPLICABLE ARTICLES: NONE
WARRANTY STATUS: INFORMATION ONLY
OASIS CODES: 106000

Technical Service Bulletin # **9384** Date: **930414**

Exterior Clearcoat - Cracking/Eroding/Peeling Off

Article No.
93-8-4

April 14, 1993

PAINT - EXTERIOR CLEARCOAT "MICROCHECKING", HAZING OR PEELING

FORD:
1983-93 THUNDERBIRD
1984-93 TEMPO
1985-93 ESCORT
1986 LTD
1986-93 TAURUS
1989-93 CROWN VICTORIA, MUSTANG, PROBE

LINCOLN-MERCURY:
1983-93 COUGAR
1984-92 MARK VII
1984-93 TOPAZ
1985-89 TRACER
1986 MARQUIS
1986-93 SABLE
1988-93 CONTINENTAL, TOWN CAR
1989-93 GRAND MARQUIS
1991-93 TRACER
1993 MARK VIII

LIGHT TRUCK:
1983-93 RANGER
1986-93 AEROSTAR
1987-90 BRONCO II
1988-93 F SUPER DUTY, F-47
1991-93 ECONOLINE, EXPLORER

1993 Ford Probe L4-121 2.0L DOHC VIN A MFI

1992-93 F-150-350 SERIES
1993 VILLAGER

ISSUE:
The clearcoat layer of the basecoat/clearcoat paint system may "microcheck" (crack and erode), turn white, flake or peel off the vehicle. This condition is noticeable on the horizontal surfaces only.

ACTION:
Inspect the vehicle and if repair is necessary, refer to the following procedure for service details. This is a wet on wet procedure. Sanding is not required after the seal coat is applied.

NOTE:
READ THE ENTIRE SERVICE REPAIR PROCEDURE BEFORE STARTING REPAIRS.

REPAIR PROCEDURE

WARNING:
ALWAYS WEAR A NIOSH/OSHA RECOMMENDED VAPOR/PARTICULATE RESPIRATOR AND USE OTHER RECOMMENDED SAFETY EQUIPMENT.

1. Wash the vehicle with soap and water.

2. Verify clearcoat to basecoat or primer adhesion by applying a 2" wide masking tape strip on all horizontal body panels.

   a. Pull the tape up quickly

   b. Inspect the adhesive side for paint removal.

NOTE:
IF PAINT WAS REMOVED DURING TAPE TEST, THE ENTIRE CLEARCOAT AND BASECOAT SHOULD BE REMOVED FROM THE PANEL.

3. Wipe down the areas to be repainted with wax and grease remover.

   ^ BASF product # 900 PreKleano or equivalent

4. Sand the affected surface with 150/240 grit sand paper. Remove only clearcoat and colorcoat, featheredge areas with 320 grit paper.

NOTE:
DO NOT REMOVE SPRAY PRIMER OR E-COAT.

5. Blow off the area to remove loose dust or debris.

6. Wipe the sanded surface with wax or grease remover.

   ^ BASF product # 901 Prekleano or equivalent

7. Tack off area.

8. Mix and apply one coat of epoxy primer for adhesion and let dry per manufacturer's label instruction (20 - 30 minutes).

   ^ BASF product # DE 15, PA16, PR80 or equivalent

NOTE:
DO NOT SAND THE NEWLY PRIMED AREAS.

9. Mix and apply two coats of the appropriate colored primer surface sealer.

   ^ BASF product # DP 21, Solo Color 1:1, then 2 parts of mixture 1 part DH 60, 30% PR80 or equivalent.

10. Mix and apply 2 coats or until hiding of basecoat per manufacturer's label instructions. Apply first coat to repair area only. Apply second coat over entire area. Allow a minimum of 15 minutes flash time before applying the clearcoat.

    ^ BASF # Diamont Basecoat Color and Diamont Reducer 1:1 or equivalent.

11. Mix and apply 2 coats of urethane clearcoat per manufacturer's label instructions.

    ^ BASF product # DC90 Diamond Clear, LH50 Diamond Hardener 2:1 or equivalent.

12. Polish if necessary.

13. Clean and detail the vehicle and return it to the customer.

WARRANTY STATUS: INFORMATION ONLY

OASIS CODES: 106000

Technical Service Bulletin # **9561** Date: **950327**

Paint - Iron Particle Removal

Article No.
95-6-1

03/27/95

^ PAINT - IRON PARTICLE REMOVAL - INDUSTRIAL FALLOUT - ACID RAIN NEUTRALIZATION

^ PAINT - ROUGH TEXTURE/FERROUS METAL CONTAMINATION - ACID RAIN DISCOLORATION OR ETCHING

FORD:
1980 and after CROWN VICTORIA, ESCORT, MUSTANG, THUNDERBIRD
1982-88 EXP
1984-94 TEMPO
1986 and after TAURUS
1988-93 FESTIVA
1989 and after PROBE
1994-95 ASPIRE
1995 CONTOUR

LINCOLN-MERCURY:
1980 and after CONTINENTAL, COUGAR, GRAND MARQUIS, TOWN CAR
1981-87 LYNX
1984-92 MARK VII
1984-94 TOPAZ
1986 and after SABLE
1987-89 TRACER
1991-94 CAPRI
1991 and after TRACER
1993 and after MARK VIII
1995 MYSTIQUE

MERKUR:
1985-89 XR4TI
1988-89 SCORPIO

LIGHT TRUCK:
1980 and after F-150-350 SERIES
1981 and after ECONOLINE
1982 and after BRONCO
1983 and after RANGER
1984-90 BRONCO II
1986 and after AEROSTAR
1988 and after F SUPER DUTY
1991 and after EXPLORER
1993 and after VILLAGER
1995 and after WINDSTAR

MEDIUM/HEAVY TRUCK:
1980-91 C SERIES, CL-CLT-9000 SERIES
1980 and after F & B SERIES, L SERIES
1986 and after CARGO SERIES

ISSUE:
Ferrous metal particles (hot iron dust) are generated by manufacturing facilities, rail shipments, combustion engines, jet engines, body shops, etc. These particles mechanically/magnetically bond to vehicles' painted surfaces. Moisture and temperature combine with the particles to create a chemical reaction. The reaction causes the particles to corrode and enter into the physical paint film.

ACTION:
To remove these particles/contaminants, USE ONLY the following procedure. The procedure must be performed before any buffing, polishing,

color sanding or refinishing is attempted. The materials in this procedure are alkaline, acidic and neutral. They must be used in the specified order.

CAUTION:
ANY CHANGES TO THIS PROCEDURE WILL CAUSE AN INCOMPLETE OR UNSATISFACTORY REPAIR AND MAY RESULT IN POSSIBLE DAMAGE TO THE PAINTED SURFACES AND TRIM.

WARNING:
THE TECHNICIAN MUST WEAR PROTECTIVE CLOTHING AND EYE PROTECTION TO PREVENT SKIN IRRITATION.

CAUTION:
THE USE OF ANY OTHER PRODUCT OR PROCEDURE MAY CAUSE DAMAGE TO ALUMINUM, FLEXIBLE PAINTED SURFACES OR OTHER PAINTED SURFACES. FOLLOW DIRECTIONS EXACTLY AND RINSE THOROUGHLY AFTER EACH STEP.

NOTE:
THIS DECONTAMINATION PROCEDURE IS DESIGNED TO REMOVE SURFACE CONTAMINANTS FROM THE PAINT ON VEHICLES THAT HAVE BEEN CONTAMINATED UP TO 120 DAYS. VEHICLES WHICH HAVE EXPERIENCED THE CONDITION LONGER THAN THIS PERIOD MAY REQUIRE AN ADDITIONAL TREATMENT TO REMOVE FERROUS METAL CONTAMINANTS.

IDENTIFICATION

INDUSTRIAL FALLOUT (IFO) is a general term used to identify Rail Dust, Brake Dust, Ferrous Metal, Alkaline/Crystalline Deposits, Water Spots, Acid Rain, and other types of Environmental Contamination.

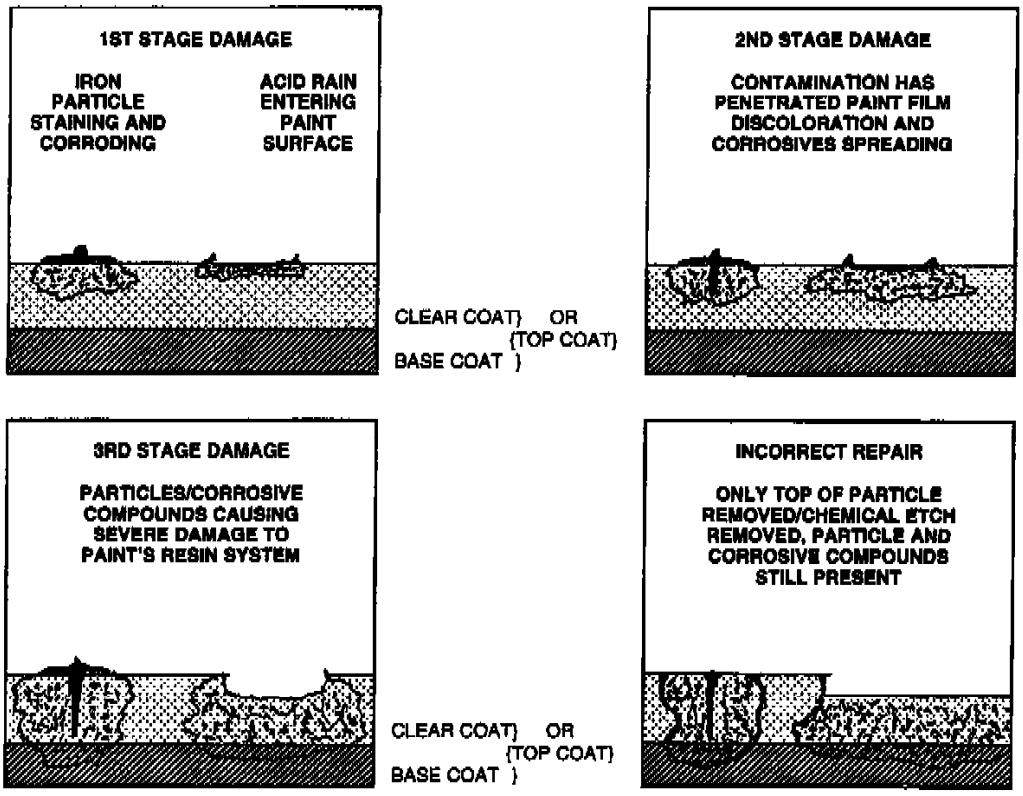

Studies conducted have shown the use of Oxalic Acid ferrous metal removers actually contribute to further damage of the paint's resin system, creating long term damage, which may not be evident for months. Additionally, Oxalic Acid products may damage soft exterior trim, aluminum trim and soften the paint.

The use of "clay" type products does not remove the entire ferrous particle or environmental contamination. Clay removes only the top of the particle and stain generated by the contamination, leaving the particle imbedded and the corrosive chemical compounds generated by the contamination in the paint system.

The particles and/or chemical compounds are still present and they continue to generate damage. Color sanding, buffing or compounding the paint film to remove ferrous metal, industrial fallout or acid rain damage may not remove the entire cause of the damage (they treat only the symptom and not the cause). The chemical compounds are still in the paint system and will continue to damage the paint. Color sanding and buffing may result in excessive removal of clear coat film. Removal of OEM clear coat in excess of 0.03 mil may contribute to premature clear coat failure and is not recommended.

THE DECONTAMINATION PROCEDURE DIRECTED IN THIS BULLETIN MUST BE PERFORMED BEFORE ANY BUFFING, POLISHING, COLOR SANDING OR REFINISHING IS ATTEMPTED.

TB-4187-A

Figure 1

For ease of identifying, the Radio Shack Model 63-851, 30X, lighted, magnifier is recommended.

1. Ferrous Metal

   ^ Light colored vehicles: Small rust orange dots with black in center of stain.

   ^ Dark colored vehicles: Small white or silver dots with a "rainbow hue" around the particle. The surface will also feel rough to the touch.

2. Industrial Fallout

   ^ The surface feels rough to the touch and may exhibit crystalline deposits.

   ^ Usually ferrous metal is present, as well as water spots.

3. Acid Rain

   ^ Surface will exhibit irregular discolored spotting.

^ Dark colored vehicles will show cloudy or greying spots where the acids have started to etch away the paint.

NOTE:
IN EXTREME CASES ETCHING OF THE SURFACE WILL BE VISIBLE OR FELT.

DECONTAMINATION

MANUFACTURERS			
PROCEDURE	FINISH KARE (818)-443-8983, CUSTOMER SERVICE	3M (800)-364-3577	MEGUIAR'S (800)-347-5700, CUSTOMER SERVICE
Decontamination	#1119, #883, #118SC	None	None
Coarse Compounds	#340 Compound, FK-7503G Pad	Imperial Micro-Finishing Compound	#4 Heavy, #1 Medium, #2 Light
Light	#338 Compound, FK-7503G Pad	Finesse-It II Finishing Compound	#4 Heavy, #1 Medium, #2 Light
Polish	#330, FK-8110G Pad, FK-2500G Pad	Perfect-It Foam Polishing Pad Glaze	#9
Protectant	#218 Or #2180	Imperial Hand Glaze	#9 Or #7
Color Sanding Lubricant	#780 Sand Lube	None	None

Use Finish Kare Inc. products 1119/883/11850 to decontaminate the paint surface. Follow the manufacturer's recommended procedures.

NOTE:
FORD DOES NOT RECOMMEND THE USE OF OXALIC ACIDS OR OTHER "FALLOUT REMOVERS".

1. Rinse off dust and debris with cold water. Be sure to start at the bottom and work up.

2. Prepare product "1119" by mixing one (1) part "1119" with four (4) parts cold water.

3. Use clean wash mitt and apply mixture to entire car, starting at the bottom and working up to the top surface. Keep car wet with the solution for 5 to 10 minutes. Do not allow product to dry on the car, and do not allow it to streak down the sides. Rewipe with mitt if necessary to avoid streaks.

4. Rinse car with cold water.

5. Dry the flat surfaces of the vehicle hood, roof and deck lid.

6. Apply product "883" directly to the contaminated surfaces using a clean dry sponge, wash mitt, or soft truck brush ("883" is ready to use from the bottle, with no mixing involved). Keep the areas wet with the "883" for 5 to 7 minutes. Do not allow to dry on the car. Wipe down to the body line on the sides.

7. Prepare product "118SC" by mixing 1 oz (0.03 L) with 1 gal (3.785 L) of water.

8. Shampoo the vehicle with "118SC" shampoo mixture using a clean wash mitt and then rinse with cold water.

NOTE:
DO NOT USE "1185C" MITT WITH "1119" OR "883" SOLUTIONS. USE SEPARATE MITTS AND ALWAYS KEEP THEM SEPARATE.

9. Inspect paint surface to see if rust particles have been removed. If rust particles have been on the vehicle for a long time, it may be necessary to repeat each of the above steps.

NOTE:
THE NEUTRALIZER CONCENTRATE IS A HEAVY DUTY SHAMPOO AND CAN BE USED IN AN AUTOMATIC CAR WASH SYSTEM.

CORRECTION OF SURFACE FOLLOWING DECONTAMINATION:

1. Visually inspect surface for evidence of removal of ferrous metal particles, crystalline deposits and water spots. Acid rain discoloring or etching will require either buffing, color sanding or refinishing if etching is visible.

2. Use the buffing products from only one (1) manufacturer. Do not intermix products.

3. Always follow the manufacturer's product sequence. Use appropriate pads with each product as recommended by the manufacturer.

NOTE:
DO NOT REMOVE MORE THAN 0.3 OF A MIL OF PAINT MATERIAL, OR REPAINTING WILL BE REQUIRED.

4. Use a dual action sander (D/A Sander) with a velcro-mount backing plate and appropriate foam pad for final polishing swirl removal.

5. Use an alcohol and water mixture (1:4 ratio) to clean buffed areas to verify removal of scratches and swirls before application of final protective glaze.

NOTE:
FREQUENT WASHING OF VEHICLES IS IMPORTANT. CONTAMINANTS SETTLE ONTO THE VEHICLE EVERY DAY. USE CLEAN WATER (DEIONIZED, REVERSE OSMOSIS, ETC.) TWICE WEEKLY TO REMOVE HEAVY DUST, AND PARTICULATES. THE USE OF A NEUTRAL pH CAR WASH SOAP EVERY TWO (2) WEEKS IS RECOMMENDED TO NEUTRALIZE VEHICLE CONTAMINATION.

PART NUMBER	PART NAME
Obtain From Finish Kare (Refer To Manufacturer Chart In This TSB Article)	#1119 Decontaminant
Obtain From Finish Kare (Refer To Manufacturer Chart In This TSB Article)	#883 Decontaminant
Obtain From Finish Kare (Refer To Manufacturer Chart In This TSB Article)	#118SC Decontaminant
Refer To Manufacturer Chart In This TSB Article For All Other Needed Products	**********

Parts Block

NOTE:
DEALERS SHOULD USE PROGRAM CODE R-23 AND CONDITION CODES C5 AND C6. REFER TO W & P MANUAL, SECTION 5-1, PAGE 3.

OTHER APPLICABLE ARTICLES: 91-18-1, 92-6-4
WARRANTY STATUS: Eligible Under The Provisions Of 12 Month/12,000 Mile Basic Warranty Coverage

OPERATION	DESCRIPTION	TIME
950601A	Decontaminate And Surface Correction - Aspire	0.6 Hr.
950601B	Decontaminate And Surface Correction - Escort/Tracer	0.6 Hr.
950601C	Decontaminate And Surface Correction - Probe	0.6 Hr.
950601D	Decontaminate And Surface Correction - Contour/Mystique	0.6 Hr.
950601E	Decontaminate And Surface Correction - Mustang	0.6 Hr.
950601F	Decontaminate And Surface Correction - Taurus/Sable	0.7 Hr.
950601G	Decontaminate And Surface	0.7 Hr.

	Correction - Thunderbird/Cougar	
950601H	Decontaminate And Surface Correction - Crown Victoria/Grand Marquis	0.7 Hr.
950601I	Decontaminate And Surface Correction - Mark VIII	0.7 Hr.
950601J	Decontaminate And Surface Correction - Continental	0.7 Hr.
950601K	Decontaminate And Surface Correction - Capri	0.6 Hr.
950601L	Decontaminate And Surface Correction - Town Car	0.8 Hr.
950601M	Decontaminate And Surface Correction - Villager	0.7 Hr.
950601N	Decontaminate And Surface Correction - Windstar	0.6 Hr.
9506010	Decontaminate And Surface Correction - Aerostar	0.7 Hr.
950601P	Decontaminate And Surface Correction - Bronco	0.6 Hr.
9506010	Decontaminate And Surface Correction - Econoline	1.1 Hrs.
950601R	Decontaminate And Surface Correction - F-Series	0.9 Hr.
950601S	Decontaminate And Surface Correction - Explorer	0.6 Hr.
950601T	Decontaminate And Surface Correction - Ranger	0.7 Hr.
950601U	Decontaminate And Surface Correction - F-Super Duty	0.5 Hr.
950601V	Decontaminate And Surface Correction - F/B-Series	0.7 Hr.
950601W	Decontaminate And Surface Correction - L-Series	0.7 Hr.
950601X	Decontaminate And Surface	0.5 Hr.
	Correction - Cargo	
950601Y	Decontaminate And Surface Correction - Tempo/Topaz	0.6 Hr.

DEALER CODING

BASIC PART NO.	CONDITION CODE
ENTRE	C5 OR C6

OASIS CODES: 106000 Technical Service Bulletin # **02-17-6** Date: **020902**

A/T - Inadvertent Shift Interlock Disabling

Article No.
02-17-6

1993 Ford Probe L4-121 2.0L DOHC VIN A MFI

09/02/02

LAMP - BRAKE - INADVERTENT DISABLING OF
BRAKE SHIFT INTERLOCK

FORD:
1992-1993 FESTIVA
1992-1994 TEMPO
1992-1997 THUNDERBIRD
1992-2003 CROWN VICTORIA, ESCORT, MUSTANG, TAURUS
1993-1997 PROBE
1994-1997 ASPIRE
1995-2000 CONTOUR
2002-2003 THUNDERBIRD
1992-1997 AEROSTAR
1992-2003 E SERIES
1993-1997 F SUPER DUTY
1994-1996 BRONCO
1994-1997 F-250, F-350
1994-2003 F-150
1995-2003 EXPLORER, RANGER, WINDSTAR
1997-2003 EXPEDITION
1998-1999 F-250 LD
1999-2003 SUPER DUTY F SERIES
2000-2003 EXCURSION, EXPLORER SPORT
2001-2003 ESCAPE, EXPLORER SPORT TRAC

LINCOLN:
1992-2003 CONTINENTAL, TOWN CAR
1993-1998 MARK VIII
2000-2003 LS
1998-2003 NAVIGATOR

MERCURY:
1992-1994 TOPAZ
1992-1997 COUGAR
1992-1999 TRACER
1992-2003 SABLE
1993-2003 GRAND MARQUIS
1994 CAPRI
1995-2000 MYSTIQUE
1999-2003 COUGAR
1993-2002 VILLAGER
1997-2003 MOUNTAINEER

Article 01-18-1 is being republished in its entirety to update the model year coverage and vehicle line applications.

ISSUE

Corporate, municipal, or police fleets may have had their Ford Motor Company vehicle modified to flash the brake lamps whenever the "police lights" or other aftermarket lights are turned on. These added "police lights" have the potential to disable the brake shift interlock system. The brake shift interlock feature prevents the vehicle from being shifted from park unless the brake pedal is depressed. Disabling of the brake shift interlock feature may enable the operator to inadvertently apply the accelerator instead of the brake pedal when shifting from Park to Drive or Reverse gears.

ACTION

As appropriate, dealers should advise owners (including corporate, municipal, and police agencies) that any vehicle that has been modified with a connection to the brake circuit, or that electrically interfaces with the brake lamps in that manner, should be disconnected IMMEDIATELY and the emergency lighting system should be modified in a manner that does not interfere with normal service operation or the brake shift interlock. In addition, if the high-mount stoplamp flashes when the "police lights" are on, the modification does not conform with the Federal Motor Vehicle Safety Standards (FMVSS) 108 which requires that the high-mount stoplamp only illuminate when applying the brakes.

Installation of warning lights should only be performed with a completely separate electrical system, without connection to any existing vehicle wiring. Connection of aftermarket electrical equipment into the brake lamp circuit or any other circuit which is connected to the Powertrain Control Module (PCM), anti-lock brake computer, air bag system, or any other vehicle system, will cause vehicle malfunction.

OTHER APPLICABLE ARTICLES: NONE
SUPERSEDES: 01-18-1
WARRANTY STATUS: INFORMATION ONLY

OASIS CODES: 203000, 203200, 205000, 301000, 503300 Technical Service Bulletin # **94B40** Date: **940401**

Overview of Program 94B40

TO: All Ford Dealers April, 1994

SUBJECT:
Owner Notification Program 94B40 - Certain 1993 Model Year Probe Cars - Owner Guide Correction

OASIS - NO
OWNER LIST - YES

AFFECTED VEHICLES

Certain 1993 Model Year Ford Probe cars built from Job # 1 through July 23, 1992, are affected by this program.

REASONS FOR THIS PROGRAM

The Owner Guide furnished with some 1993 Probe cars does not describe the proper method for reattaching the car's luggage compartment cover after removal. If the cover is not properly retained, it would be free to move and could cause injury to rear seat passengers during a sudden stop or accident.

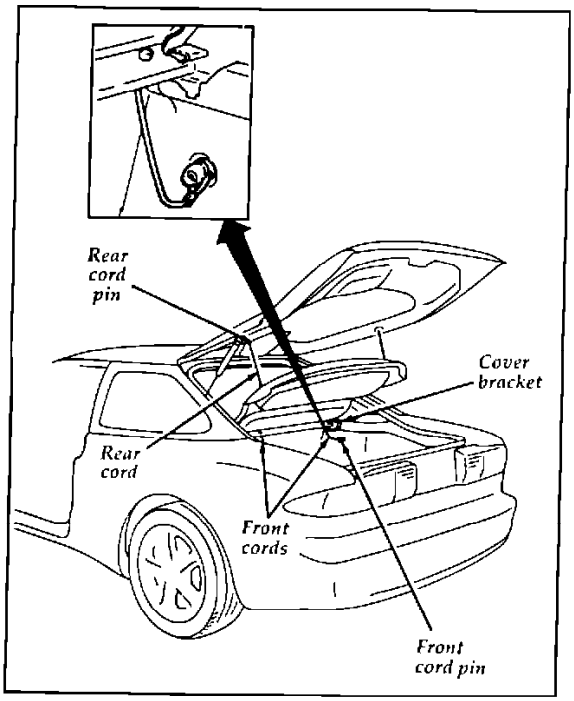

The luggage compartment and cover

Warning: The cover may cause injury in a sudden stop or accident if it is left lying loose in the vehicle or if it is not securely installed. Therefore, the cover should either be securely installed or removed from the vehicle. To be securely installed, the cover must be attached to the brackets and all four cords must be fastened.

127

SERVICE ACTION

To correct this condition, owners of the affected cars will be mailed a correction sticker page and asked to affix it to page 127 of their Owner Guide. Owners may also return to their dealer to have the corrected sticker page affixed.

ATTACHMENTS

Attachment I
- Administrative Information

Attachment II
- Labor Allowances

Attachment I - Administrative Information

OASIS
This program will NOT appear in OASIS.

PLEASE NOTE
CORRECT ALL VEHICLES IN STOCK BEFORE DELIVERY

PROMPTLY CORRECT

- Affected vehicles on the enclosed list.

- Other eligible vehicles which are brought to your dealership.

DEALER-OWNER CONTACT
Immediately contact any owner whose name is not on the list. Give owner a copy of the Owner Letter. Arrange with the owner for a service date.

FCSD CONTACT
Talk with your FCSD Service Zone Manager about program concerns.

FORM 1863
Enter 1863 claims using DWE

See Warranty and Policy Manual:

- Section 5.6 - I/Section 6.1 - 24 (Owner Notification Programs)

Attachment II - Labor and Parts Information

OWNER NOTIFICATION PROGRAM 94B40
1993 PROBE OWNER GUIDE CORRECTION

LABOR ALLOWANCES	HOURS	LABOR OPERATION
Affix Corrected Sticker to Page 127 of Owner Guide.....	0.2 Hrs.	B40B

PARTS REQUIREMENTS

NONE
Owners will be mailed a correction sticker page to be affixed on page 127 of their car's Owner Guide. Owners may also return to their dealer to have the corrected sticker page affixed. Refer to the following for labor allowance and claim processing information.

NOTE:
If additional sticker pages are required, they may be obtained at no charge by calling Renkim Corporation on 1-800-352-5621.

CLAIMS PREPARATIONS

- Use Form 1863
- Enter using DWE
- Use code information shown below:

Program Code	- 94B40
Causal Basic Part Number	- MISC
Condition Code	- 08
Labor Operation	- B40B
Customer Concern Code	- N99

Owner Letter

Serial Number 12345678901234567 May, 1994

Mr. John Sample
123 Main Street
Anywhere, USA 12345

REASON FOR THIS LETTER

The Owner Guide included with your 1993 Probe does not describe the proper method for reattaching the car's luggage compartment cover after removal. If the cover is not properly retained, it would be free to move and could cause injury to rear seat passengers during a sudden stop or

accident.

NEW PAGE PROVIDED WITH THIS LETTER

In order to provide the information necessary to properly secure the luggage compartment cover, we have enclosed a new Owner Guide sticker page with this letter. Please affix this new sticker page over the existing page in your car's Owner Guide.

ATTACHING THE PAGE

Peel off the protective backing and affix it on page 127 of your 1993 Probe Owner Guide.

CONTACT YOUR DEALER

If you want a dealer to affix the page, contact him. Be sure that you bring this letter and the new sticker page with you when you visit the dealer. There is no charge to you for this service.

We are taking this action as part of our ongoing efforts to maintain owner confidence in our products. We hope this program will confirm your continued satisfaction in your Ford built car.Technical Service Bulletin # **96246** Date: **961118**

Electrical Diode - Identification and Replacement

Article No.
96-24-6

11/18/96

WIRING - ELECTRICAL DIODE IDENTIFICATION AND SERVICE REPLACEMENTS

FORD:
1984-86 LTD
1984-88 EXP
1984-94 TEMPO
1984-97 CROWN VICTORIA, ESCORT, MUSTANG, THUNDERBIRD
1986-97 TAURUS
1989-97 PROBE
1994-97 ASPIRE
1995-97 CONTOUR

LINCOLN-MERCURY:
1984-86 MARQUIS
1984-87 LYNX
1984-92 MARK VII
1984-94 TOPAZ
1984-97 CONTINENTAL, COUGAR, GRAND MARQUIS, TOWN CAR
1986-97 SABLE
1987-89 TRACER
1991-94 CAPRI
1991-97 TRACER
1995-97 MYSTIQUE

MERKUR:
1985-89 XR4TI
1988-90 SCORPIO

LIGHT TRUCK:
1983-97 RANGER
1984-90 BRONCO II
1984-97 ECONOLINE, F-150-350 SERIES
1986-97 AEROSTAR
1991-97 EXPLORER
1995-97 WINDSTAR

MEDIUM/HEAVY TRUCK:
1984-91 C SERIES, CL-CLT-9000 SERIES
1984-97 F & B SERIES, L SERIES
1986-97 CARGO SERIES
1996-97 AEROMAX, LOUISVILLE

This TSB article is being republished in its entirety to update the applicable model years.

ISSUE:
Electrical system concerns that are due to diode failure may be serviced with an approved Ford service diode. Some electrical diodes used in early production vehicles are color coded for the purpose of size identification while others are stamped with a manufacture number. All Ford service diodes and current production diodes are identified by manufacture number.

ACTION:
If service is required, refer to the appropriate model/year Electrical and Vacuum Troubleshooting Manual (EVTM) to determine the size and location of the diode(s). Refer to the following Electrical Diode Application Chart for the correct service part number.

NOTE:
IF THE DIODE REQUIRING REPLACEMENT DOES NOT HAVE THE SAME RATING AS LISTED IN THE APPLICATION CHART, USE THE NEXT HIGHER RATED DIODE.

PRODUCTION IDENTIFICATION		
Old Design	Current Design	Service Part Identification
1.0 Amp-200V (color gray)	1.0 Amp-200V (stamped 1N4003)	1.0 Amp-400V E8DZ-10C912-A (stamped 1N4004)
1.0 Amp-50V (color black)	1.0 Amp-400V (stamped 1N4004)	1.0 Amp-400V E8DZ-10C912-A (stamped 1N4004)
3.0 Amp-50V (color orange)	6.0 Amp-400V (stamped MR754)	6.0 Amp-400V E8DZ-10C912-B (stamped MR754)
6.0 Amp-400V (color blue)	6.0 Amp-400V (stamped MR754)	6.0 Amp-400V E8DZ-10C912-B (stamped MR754)

ELECTRICAL DIODE APPLICATION CHART

PART NUMBER	PART NAME
E8DZ-10C912-A	Diode - 1.0 Amp - 400V
E8DZ-10C912-B	Diode - 6.0 Amp - 400V

OTHER APPLICABLE ARTICLES: NONE

SUPERSEDES: 89-2-8

WARRANTY STATUS: INFORMATION ONLY

OASIS CODES: 203000, 203200, 2770

Technical Service Bulletin # **9594** Date: **950508**

Combination Switch - Slow to Cancel After Left Turns

Article No
95-9-4

05/08/95

SWITCH - COMBINATION SWITCH IS SLOW TO RETURN WHEN MAKING LEFT - HAND TURNS - VEHICLES BUILT 4/16/92 THROUGH 10/16/94

FORD:
1993-95 PROBE

ISSUE:
The turn signal lever/combination switch may be slow to return to center on some vehicles when making left-hand turns. This may be due to the upper side of the rubber boot on the turn signal lever sticking in the steering column.

ACTION:
Trim 15 mm (1/2") off the top of the rubber boot. This should reduce the possibility of the rubber boot sticking in the steering column cover. Refer to the following Service Procedure for details.

SERVICE PROCEDURE

1. Lower the turn signal lever

2. Pull out the upper side of the rubber boot from the steering column cover.

NOTE:
WHEN PULLING OUT THE RUBBER BOOT, DO NOT ROTATE THE BOOT.

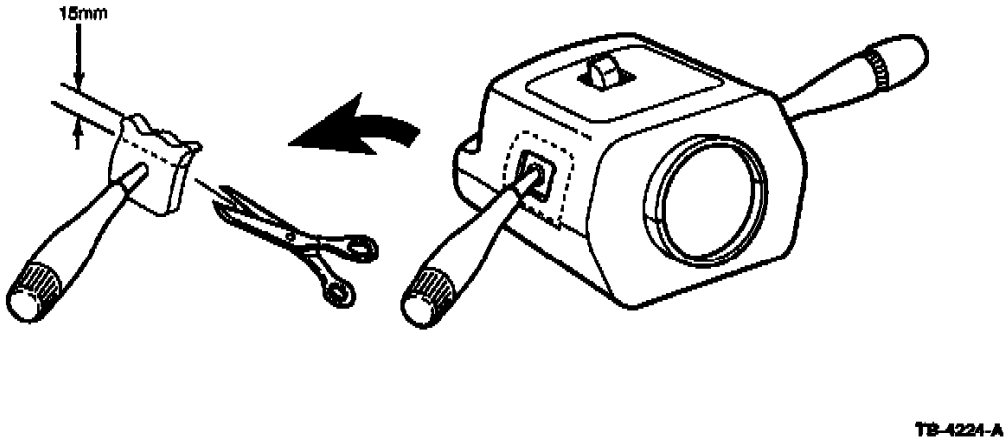

Figure 1

3. Cut 15 mm (1/2") off the top of the rubber boot. Refer to Figure 1.

4. Reinstall the rubber boot into the steering column cover.

5. Verify proper operation of the turn signal lever/combination switch.

OTHER APPLICABLE ARTICLES: NONE

WARRANTY STATUS: Eligible Under The Provisions Of Bumper To Bumper Warranty Coverage

OPERATION	DESCRIPTION	TIME
950904A	Trim Top Of Rubber Boot	0.2 Hr.

DEALER CODING

BASIC PART NO.	CONDITION CODE
13K359	41

OASIS CODES: 107000, 203000, 205000, 303000

Technical Service Bulletin # **95174** Date: **950828**

Glove Compartment - Improved Lock

Article No.
95-17-4

08/28/95

DOOR - GLOVE COMPARTMENT - IMPROVED LOCK ASSEMBLY AVAILABLE - PROBES BUILT THROUGH 7/1/94 AND ESCORT/TRACERS BUILT THROUGH 9/6/94

FORD:
1991-94 ESCORT
1993-94 PROBE

LINCOLN-MERCURY:
1991-94 TRACER

ISSUE:
The glove compartment lock assembly has been improved for easier latching.

ACTION:
Replace the glove compartment lock assembly with an improved lock assembly. Refer to the following procedure for service details.

SERVICE PROCEDURE

1. Open the glove compartment door and flex the down stops inward to allow the glove compartment door to drop. It is not necessary to remove the box from the instrument panel.

2. Remove the glove compartment bin by removing the eight (8) screws which secure the bin.

3. Remove the old latch from the steel reinforcement by removing the two (2) screws which secure it to the reinforcement.

4. Install the new latch and align it so that there is a uniform visible gap to the door and tighten the screws.

5. Flex the down stops inward and close the glove compartment door. Verify service fix.

PART NUMBER	PART NAME
F42Z-6106072-C	Glove Compartment Lock Assembly (Ebony)
F42Z-6106072-D	Glove Compartment Lock Assembly (Red)
F42Z-6106072-E	Glove Compartment Lock Assembly (Blue)
F42Z-6106072-F	Glove Compartment Lock Assembly (Gray)
F42Z-6106072-G	Glove Compartment Lock Assembly (Ebony)
F42Z-6106072-H	Glove Compartment Lock Assembly (Dark Opal Gray)
F5CZ-5806072-A	Glove Compartment Lock Assembly (Crystal Blue)
F5CZ-5806072-B	Glove Compartment Lock Assembly (Sandalwood)
F5CZ-5806072-C	Glove Compartment Lock Assembly (Scarlet)
F5CZ-5806072-D	Glove Compartment Lock Assembly (Titanium)
F5CZ-5806072-E	Glove Compartment Lock Assembly (Mocha)
F5CZ-5806072-F	Glove Compartment Lock Assembly (Medium Opal Gray)
F5CZ-5806072-G	Glove Compartment Lock Assembly (Lapis Blue)

Parts Block

OTHER APPLICABLE ARTICLES: NONE
WARRANTY STATUS: Eligible Under The Provisions Of Bumper To Bumper Warranty Coverage For 1992-94 Model Year Vehicles, Base Warranty Coverage For 1991 Model Year Vehicles

OPERATION	DESCRIPTION	TIME
951704A	Replace Glove Compartment Door Latch	0.2 Hr.

DEALER CODING

BASIC PART NO.	CONDITION CODE
7006072	33

OASIS CODES: 108000, 112000

Technical Service Bulletin # **961710** Date: **960812**

A/C - R12 Refrigerant Substitutes Service Tip

Article No.
96-17-10

08/12/96

AIR CONDITIONING - USE OF R-12 REFRIGERANT SUBSTITUTES - SERVICE TIP

FORD:
1980-93 CROWN VICTORIA
1981-93 ESCORT
1982-83 FAIRMONT
1982-88 EXP

1993 Ford Probe L4-121 2.0L DOHC VIN A MFI

1982-93 MUSTANG, THUNDERBIRD
1983-86 LTD
1984-94 TEMPO
1986-93 TAURUS
1988-93 FESTIVA
1989-93 PROBE

LINCOLN-MERCURY:
1980-93 GRAND MARQUIS, TOWN CAR
1981-87 LYNX
1982-83 LN7, ZEPHYR
1982-86 CAPRI
1982-93 COUGAR
1982-94 CONTINENTAL
1983-86 MARQUIS
1984-92 MARK VII
1984-94 TOPAZ
1986-93 SABLE
1991-93 CAPRI, TRACER

MERKUR:
1985-89 XR4TI
1988-90 SCORPIO

LIGHT TRUCK:
1980-93 BRONCO, ECONOLINE, F SUPER DUTY, F-150-350 SERIES
1983-93 RANGER
1984-90 BRONCO II
1986-93 AEROSTAR
1988-93 F-47
1991-93 EXPLORER
1993 VILLAGER

MEDIUM/HEAVY TRUCK:
1985-94 CARGO SERIES, F & B SERIES, L SERIES

This TSB article is being republished in its entirety to list Environmental Protection Agency (EPA) reviewed NC substitutes for R-12 refrigerant.

ISSUE:
A number of manufacturers are producing refrigerant products which are described as being direct replacements for refrigerant R-12.

ACTION:
If service is required, use only new or of known quality recycled refrigerant R-12. Ford Motor Company has approved R-134a as the only refrigerant substitute for R-12.

CAUTION:
USING ANY UNAUTHORIZED SUBSTITUTE REFRIGERANT FOR R-12 MAY RESULT IN SEVERE DAMAGE TO THE A/C SYSTEM COMPONENTS.

INFORMATION FROM THE EPA

This information has been taken from EPA documents to address Ford specific applications and recommendations. Further EPA information on ozone-depleting substances and regulations regarding its handling can be found on the Internet at World Wide Web site: http://www.epa.gov/ozone/

In 1994, EPA established the Significant New Alternatives Policy (SNAP) program to review alternatives to ozone-depleting substances like R-12. EPA examines new substitutes for their ozone depleting, global warming, flammability, and toxicity characteristics. The SNAP process does not test these substitutes for A/C system compatibility, reliability, durability, or performance.

Under the SNAP rule, each new refrigerant must be used in accordance with the following conditions:

1. Unique Fittings - Each new refrigerant must be used with a unique set of fittings to prevent the accidental mixing of different refrigerants.

2. Unique Equipment - Each refrigerant must have dedicated recovery/recycling equipment for that refrigerant.

3. Labels - Whether a vehicle is originally designed to use a new refrigerant or is retrofitted, the technician must apply a detailed label giving specific information about the alternative. This label covers up information about the old refrigerant and provides valuable details on the alternative and how it was used. The technician is required to fill in their name, company performing the retrofit, address and the date retrofitted.

4. Remove Original Refrigerant - The original R-12 must be removed from the system prior to charging with the new refrigerant. This will guarantee that the largest amount of clean R-12 is available for use in vehicles that still need it.

				Components Percentage							
Brand Name (1)	**Ford Approved**	**Status (2)**	**Date**	**HCFC 22**	**HCFC 124**	**HCFC 142b**	**HFC 134a**	**HFC 152a**	**Propane (R-290)**	**Butane (R-600)**	**Iso-butane (R-600a)**
HFC-134a	Yes	ASU	3/18/94				100%				
R-401C	No	ASU	3/18/94	33%	52%			15%			
FRIGC FR-12	No	ASU	6/13/95		39%		59%			2%	
Freezone (3)	No	ASU	5/22/96			19%	70%				
R-406A / GHG / McCool (4)	No	P	5/22/96	55%		41%					4%
GHG-X4 / Autofrost / Chill-It (4)	No	P	5/22/96	51%	28.5%	16.5%					4%
Hot Shot / Kar Kool (4)	No	P	5/22/96	50%	39%	9.5%					1.5%
GHG-HP (4)	No	P	5/22/96	65%		31%					4%
FREEZ-12	No	Under Review				20%	80%				

(1) R-401A (made by DuPont), R-401B (DuPont), R-409A (Elf Atochem), Care 30 (Calor Gas), Adak-29/Adak-12 (TACIP International) and ES-12R (Intervest) have not been submitted for review in motor vehicle air conditioning, and it is therefore illegal to use them in such systems.

(2) See article for details on legality of use according to Status:
- ASU = acceptable subject to fittings, labeling, and no drop-in use conditions
- P = proposed acceptable subject to use conditions; open to public comment so decision is not final
- UNA = unacceptable; illegal for use as CFC-12 substitutes in motor vehicle air conditioners

(3) Freezone contains 2% of a lubricant

(4) Additional use condition: MUST BE USED WITH BARRIER HOSES

				Reason Unacceptable
Brand Name (1)	**Ford Approved**	**Status (2)**	**Date**	**HCFC 22, HCFC 124, HCFC 142b, HFC 134a, HFC 152a, Propane (R-290), Butane (R-600), Iso-butane (R-600a)**
Ikon-12	No	ASU	5/22/96	Composition claimed as confidential business information
OZ-12	No	UNA	3/18/94	Flammable blend of hydrocarbons; insuffcient data to demonstrate safety
R-176	No	UNA	3/18/94	Contains CFC-12, which is inappropriate in a CFC-12 substitute
HC-12a	No	UNA	6/13/95	Flammable blend of hydrocarbons; insufficient data to demonstrate safety
R-405A	No	UNA	6/13/95	Contains a perfluorocarbon, which has extremely high global warming potential and lifetime

(1) R-401A (made by DuPont), R-401B (DuPont), R-409A (Elf Atochem), Care 30 (Calor Gas), Adak-29/Adak-12 (TACIP International) and ES-12R (Intervest) have not been submitted for review in motor vehicle air conditioning, and it is therefore illegal to use them in such systems.

(2) See article for details on legality of use according to Status:
- ASU = acceptable subject to fittings, labeling, and no drop-in use conditions
- P = proposed acceptable subject to use conditions; open to public comment so decision is not final
- UNA = unacceptable; illegal for use as CFC-12 substitutes in motor vehicle air conditioners

(3) Freezone contains 2% of a lubricant

(4) Additional use condition; MUST BE USED WITH BARRIER HOSES

A summary of the refrigerants reviewed under EPA's SNAP program for use in motor vehicle air conditioning systems is in the table.

OTHER APPLICABLE ARTICLES: 91-9-7, 96-15-7

SUPERSEDES: 93-23-11

WARRANTY STATUS: INFORMATION ONLY

OASIS CODES: 208000, 208999, 290000

Technical Service Bulletin # **94-14-3** Date: **940713**

R-12 Refrigerant - Substitutes

Article No.
94-14-3

07/13/94

Air Conditioning - Use Of R-12 Refrigerant Substitutes - Service Tip

FORD:
1980-93 CROWN VICTORIA
1981-93 ESCORT
1982-83 FAIRMONT
1982-88 EXP
1982-93 MUSTANG, THUNDERBIRD
1983-86 LTD
1984-93 TEMPO
1986-93 TAURUS
1988-93 FESTIVA
1989-93 PROBE

LINCOLN-MERCURY:
1980-93 GRAND MARQUIS, TOWN CAR
1981-87 LYNX
1982-83 LN7, ZEPHYR
1982-86 CAPRI
1982-93 CONTINENTAL, COUGAR
1983-86 MARQUIS
1984-92 MARK VII
1984-93 TOPAZ
1986-93 SABLE
1991-93 CAPRI, TRACER

MERKUR:
1986-89 SCORPIO, XR4TI

LIGHT TRUCK:
1980-93 BRONCO, ECONOLINE, F-150-350 SERIES
1983-93 RANGER
1984-90 BRONCO II
1986-93 AEROSTAR
1988-93 F-47
1991-93 EXPLORER
1992-94 F-53
1993 VILLAGER

MEDIUM/HEAVY TRUCK:
1954-90 C SERIES
1970-94 L SERIES
1979-90 CL-9000, CL-CLT-9000 SERIES
1980-94 F SERIES
1986-94 CARGO SERIES

This TSB is being republished in its entirety to include Heavy Truck models.

ISSUE:

A number of manufacturers are producing refrigerant products which are described as being direct replacements for refrigerant R-12. The use of any unauthorized substitute refrigerant may severely damage the A/C system components.

ACTION:

If service is required, use only NEW or RECYCLED refrigerant R-12.

Ford Motor Company has not tested or approved any R-12 refrigerant substitute at this time. R-134a is approved only for systems which specify R-134a, and is not compatible with R-12 systems.

R-22 likewise, is not compatible with R-12 systems.

CAUTION:
USING ANY UNAUTHORIZED SUBSTITUTE REFRIGERANT FOR R-12 MAY RESULT IN SEVERE DAMAGE TO THE A/C SYSTEM COMPONENTS.

OTHER APPLICABLE ARTICLES: 91-9-7

SUPERSEDES: 93-23-11

WARRANTY STATUS: INFORMATION ONLY

OASIS CODES: 208000, 208999, 290000

Technical Service Bulletin # **93206** Date: **930929**

Air Conditioning - Use of Correct Fluorescent Tracer Dye

Article No.
93-20-6

09/29/93

AIR CONDITIONING - USE OF CORRECT FLUORESCENT TRACER DYE - SERVICE TIP

FORD:
1980-93 CROWN VICTORIA
1981-93 ESCORT
1982-83 FAIRMONT
1982-88 EXP
1982-93 MUSTANG, THUNDERBIRD
1983-86 LTD
1984-93 TEMPO
1986-93 TAURUS
1988-93 FESTIVA
1989-93 PROBE

LINCOLN-MERCURY:
1980-93 GRAND MARQUIS, TOWN CAR
1981-87 LYNX
1982-83 LN7, ZEPHYR
1982-86 CAPRI
1982-93 CONTINENTAL, COUGAR
1983-86 MARQUIS
1984-92 MARK VII
1984-93 TOPAZ
1986-93 SABLE
1991-93 CAPRI, TRACER

LIGHT TRUCK:
1980-93 BRONCO, ECONOLINE, F-150-350 SERIES
1983-93 RANGER
1984-90 BRONCO II
1986-93 AEROSTAR
1988-93 F-47
1991-93 EXPLORER
1993 VILLAGER

ISSUE:
Use of untested, unapproved fluorescent tracer dyes for A/C system leak checking may damage the air conditioning system. Some of these materials may not be compatible with Ford A/C systems.

ACTION:
When leak-checking an R-12 A/C system with a "black light", use only Rotunda-supplied Part No. 112-R0027, Fluoro-Lite brand dye. No other dyes have been approved by Ford Motor Company.

NOTE:
112-R0027 DYE IS NOT COMPATIBLE WITH R-134a REFRIGERANT.

OTHER APPLICABLE ARTICLES: NONE
WARRANTY STATUS: INFORMATION ONLY
OASIS CODES: 208999

Technical Service Bulletin # **99-19-6** Date: **990920**

A/C - Identification of Non Approved Refrigerants

Article No.
99-19-6

09/20/99

^ AIR CONDITIONING - IDENTIFICATION OF
NON-FORD APPROVED REFRIGERANTS

^ AIR CONDITIONING - PURGING AIR FROM SYSTEM

FORD:
1985-1986 LTD
1985-1988 EXP
1985-1994 TEMPO
1985-1997 THUNDERBIRD
1985-2000 CROWN VICTORIA, ESCORT, MUSTANG
1986-2000 TAURUS
1988-1993 FESTIVA
1989-1997 PROBE
1994-1997 ASPIRE
1995-2000 CONTOUR
2000 FOCUS
1985-1990 BRONCO II
1985-1996 BRONCO
1985-1997 F-250 HD, F-350
1985-2000 ECONOLINE, F-150, F-250 LD, RANGER
1986-1997 AEROSTAR
1988-1997 F SUPER DUTY
1991-2000 EXPLORER
1995-2000 WINDSTAR
1997-2000 EXPEDITION
1999-2000 SUPER DUTY F SERIES
1985-1991 CL-CLT-9000 SERIES
1985-1999 L SERIES
1985-2000 F & B SERIES
1986-1998 CARGO SERIES
1997-1998 AEROMAX, LOUISVILLE

LINCOLN:
1985-1992 MARK VII
1985-2000 CONTINENTAL, TOWN CAR
1993-1998 MARK VIII
2000 LS
1998-2000 NAVIGATOR

MERCURY:
1985-1986 MARQUIS
1985-1987 LYNX
1985-1994 TOPAZ
1985-1997 COUGAR
1985-2000 GRAND MARQUIS
1986-2000 SABLE
1987-1989 TRACER
1991-1994 CAPRI

1993 Ford Probe L4-121 2.0L DOHC VIN A MFI

1991-2000 TRACER
1995-2000 MYSTIQUE
1999-2000 COUGAR
1993-2000 VILLAGER
1997-2000 MOUNTAINEER

MERKUR:
1985-1989 XR4TI
1988-1989 SCORPIO

This TSB article is being republished in its entirety to add model year vehicles

ISSUE
A number of non-approved/alternate refrigerants have entered the marketplace and are being advertised as "drop-in replacements" for R-12 and R-134a. The use of non-approved refrigerants such as R-22, hydrocarbons, and other refrigerant blends could cause safety, durability, and performance concerns if they are installed in Ford A/C systems. Identification of the type of refrigerant contained in vehicle A/C systems, before servicing, is necessary to prevent dealer service equipment and refrigerant supplies from being contaminated with non-approved refrigerants.

ACTION
Refrigerant identification must be performed prior to recovering the refrigerant into a recovery machine to prevent cross-contamination of the recovery machine and other A/C systems being serviced with that recovery machine. Refer to the following text.

OTHER APPLICABLE ARTICLES: 94-14-3, 95-18-4

SUPERSEDES: 98-12-8

WARRANTY STATUS: Eligible Under The Provisions Of Bumper To Bumper Warranty Coverage For 1993-2000 Model Year Vehicles, Basic Warranty Coverage For All Other Model Year Vehicles

OPERATION	DESCRIPTION	TIME
991906A	Test A/C System For Contaminated Refrigerant	0.3 Hr.

DEALER CODING

BASIC PART NO.	CONDITION CODE
R-12	49

OASIS CODES: 208000, 208999

A/C Refrigerant Analyzer Function

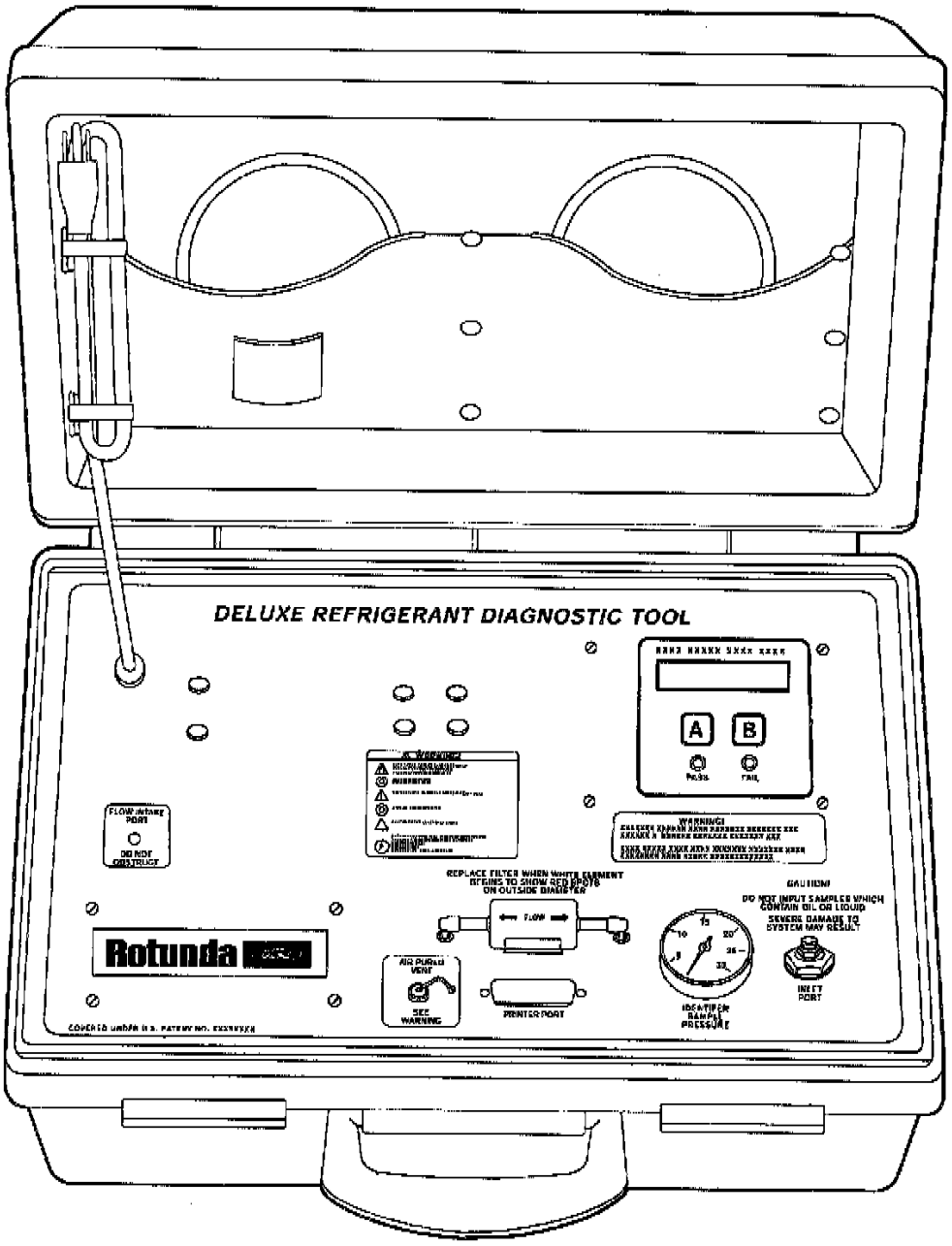

Figure 1

Ford Motor Company has approved the Rotunda Deluxe A/C Refrigerant Analyzer (198-00003) for use on Ford and Lincoln-Mercury vehicles (Figure 1). The analyzer provides the technician with a quick and easy way to identify the type and percentage of refrigerant (R-134a, R-12, R-22, or flammable hydrocarbon). The analyzer can also provide the percentage of air in the A/C system and automatically purge air from the system.

The A/C Refrigerant Analyzer is designed to identify vapor gas samples taken directly from automotive air conditioning systems or refrigerant storage cylinders. Refrigerant vapor passes through the multiple sensor Non-Dispersive Infra-Red (NDIR) sensing unit. The microprocessor calculates each refrigerant type and purity percentage which is displayed on the analyzer's Liquid Crystal Display (LCD).

The analyzer identifies the purity percentage of R-134a, R-12, R-22, hydrocarbon; and air in the sample. If the purity percentage of the R-134a or R-12 is 98% or greater by weight, a green "PASS" Light Emitting Diode (LED) will light. If refrigerants R-134a or R-12 do not meet 98% purity levels, the red "FAIL" LED will light. Levels of R-22 and flammable hydrocarbons above 2% will light the red "FAIL" light. If a hydrocarbon is detected above 5%, both the "FAIL" light and "HYDROCARBON" light will illuminate and a horn will sound alerting the user of potential hazards.

The percent of air contained in the sample will be displayed if the R-134a or R-12 content is 98% or above. The analyzer eliminates the effect of air when determining the refrigerant sample content because air is not considered a contaminant although air can affect A/C system performance. Air will automatically be purged until a pure refrigerant with a less than 2% by weight air measurement is reached.

Recovery of Contaminated Refrigerant

If contaminated refrigerant is detected, DO NOT recover the refrigerant into your R-134a or R-12 recovery/recycling equipment. Take the following actions:

1. Repeat the test to verify contaminated refrigerant is present.

2. Advise the customer of the contaminated A/C system and any additional cost to repair the system. The customer may wish to return to the service facility which performed the last A/C service.

3. Recover the contaminated refrigerant using suitable recovery-only equipment designed for capturing and storing contaminated refrigerant. This equipment must only be used to recover contaminated refrigerant to prevent the spread to other vehicles. As an alternative, contact an A/C service facility in your area which has the proper equipment for refrigerant recovery.

Repairing A Contaminated A/C System

Once the contaminated refrigerant is removed from the system it will be necessary to repair the system. Ford recommends that you do the following to be sure a quality repair is made:

1. Determine the cause of the failure.

2. Determine which parts will need to be replaced.

3. Flush the heat exchangers to remove any oil that may be degraded due to the contaminated refrigerant.

4. Install a new suction/accumulator.

5. Properly oil match the system to verify that the correct amount of clean refrigerant oil is present in the system.

6. Evacuate the system for 45 minutes.

7. Recharge the system, verify proper operation, and leak test.

Disposal of Contaminated Refrigerant

Disposal of contaminated refrigerant is a new process to the automotive industry Listed below are companies that will assist with disposal of contaminated refrigerant. Ford Motor Company has not evaluated the processes of the listed refrigerant disposal companies and is not endorsing or promoting their companies Business transactions are between the dealership and disposal companies. Disposal costs will vary between $3.00 and $5.00 per pound, plus the cost of round trip cylinder shipping.

^ Omega Refrigerant Reclamation

^ 5263 North Fourth St.

^ Irwindale, CA 91706

^ (310) 698-0991 FAX: (310) 696-7908

^ Full Cycle Global

^ 2966 Wireton

^ Blue Island, IL 60406

^ (708) 388-8551 FAX: (708) 399-6550

^ U.S. Refrigerant Reclaim, Inc.

^ 12420 North Green River Road

^ Evansville, IN 47711

^ (800) 207-5931 FAX: (812) 867-1463

^ Full Cycle Global

^ 343 South Airline Highway

^ Gonzales, LA 70737

^ (504) 644-5333 FAX: (504) 644-1609

^ CFC Reclamation

^ 1321 Swift North

^ Kansas City, MO 64116

^ (816) 471-2511

^ Full Cycle Global

^ 550 James St.

^ Lakewood, NJ 08701

^ (908) 370-3400 FAX: (908) 370-3088

^ National Refrigerants, Inc.

^ 11401 Roosevelt Blvd.

^ Philadelphia, PA 19154

^ (215) 698-6620 FAX: (215) 602-8205

^ Gartech Refrigerant Reclamation

^ 2002 Platinum

^ Garland, TX 75042

^ (214) 272-4070 FAX: (214) 272-6548

^ Refrigerant Reclaim Services

^ 121 S. Norwood Dr.

^ Hurst, TX 76053-7807

^ (817) 282-0022 FAX: (800) 831-6182

^ Full Cycle Global

^ 2055 Silber, Suite 109

^ Houston, TX 77055

^ (713) 681-7370 FAX: (713) 681-9947

^ Refrigerant Reclaim, Inc.

^ 122 Old Stage Coach Road

^ Dumfries, VA 22026

^ (800) 238-5902 FAX: (703) 441-0393Technical Service Bulletin # **9522** Date: **950130**

Air Conditioning - O Ring Removal Service Tip

Article No.
95-2-2

01/30/95

AIR CONDITIONING - O-RING REMOVAL FROM SPRING LOCK COUPLER - SERVICE TIP

FORD:
1981-95 MUSTANG
1982-83 FAIRMONT
1982-88 EXP
1982-95 CROWN VICTORIA, ESCORT, THUNDERBIRD
1983-86 LTD
1984-94 TEMPO
1986-95 TAURUS

1993 Ford Probe L4-121 2.0L DOHC VIN A MFI

1989-95 PROBE
1995 CONTOUR

LINCOLN-MERCURY:
1982-83 LN7, ZEPHYR
1982-87 LYNX
1982-95 CONTINENTAL, COUGAR, GRAND MARQUIS, TOWN CAR
1983-86 MARQUIS
1984-92 MARK VII
1984-94 TOPAZ
1986-95 SABLE
1991-95 TRACER
1993-94 CAPRI
1993-95 MARK VIII
1995 MYSTIQUE

LIGHT TRUCK:
1982-95 BRONCO, F SUPER DUTY, F-150-350 SERIES, RANGER
1983-90 BRONCO II
1986-95 AEROSTAR
1988-95 ECONOLINE
1991-95 EXPLORER
1995 WINDSTAR

This TSB is being republished in its entirety to include the latest level tools and procedures available.

ISSUE:
Some technicians may use small screwdrivers to remove 0-rings from spring lock coupling fittings. This practice can and has resulted in scratches across the 0-ring grooves in the fittings. Loss of refrigerant charge in the system may result.

O-RING REMOVAL

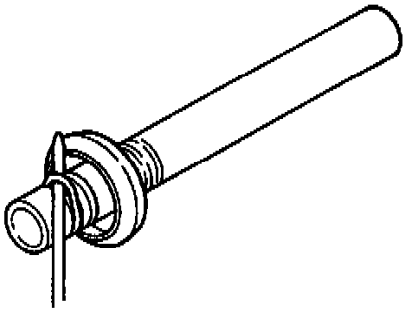

TB-3195-B

Figure 1

ACTION:
It is recommended that a plastic toothpick, or equivalent tool, be used to remove 0-rings. Refer to Figure 1. Do not use the metal O-Ring Tool (T71P-19703-C). Only plastic O-Ring Tool (F5VH-17B017-AA) is approved for O-ring removal.

OTHER APPLICABLE ARTICLES: 91-22-5, 93-6-5
SUPERSEDES: 93-15-5
WARRANTY STATUS: INFORMATION ONLY
OASIS CODES: 208000, 208999

Technical Service Bulletin # **96207** Date: **960923**

A/C O Ring - Availability and Applications

Article No.
96-20-7

09/23/96

AIR CONDITIONING - NEW 0-RING AVAILABILITY AND APPLICATIONS - SERVICE TIP

1993 Ford Probe L4-121 2.0L DOHC VIN A MFI

FORD:
1992-93 FESTIVA
1992-94 TEMPO
1992 and after ESCORT, MUSTANG, PROBE, TAURUS, THUNDERBIRD
1994 and after ASPIRE
1995 and after CONTOUR

LINCOLN-MERCURY:
1992-94 TOPAZ
1992 and after CONTINENTAL, COUGAR, SABLE, TRACER
1993-94 CAPRI
1993 and after MARK VIII
1995 and after MYSTIQUE

LIGHT TRUCK:
1992 and after AEROSTAR, BRONCO, ECONOLINE, EXPLORER F-150-350 SERIES, F-47, RANGER
1993 and after VILLAGER
1995 and after WINDSTAR
1997 and after MOUNTAINEER

MEDIUM/HEAVY TRUCK:
1992 and after F & B SERIES

ISSUE:
This bulletin provides climate control system O-ring part number information.

ACTION:

SPRING LOCK COUPLINGS AND TUBE-O FITTINGS	
Size	Part Number
3/8"	W701993-S
1/2"	W701992-S
5/8"	W701994-S
3/4"	391305-S100

PEANUT FITTINGS	
Size	Part Number
3/8"	W702643-S300
1/2"	W702645-S300
5/8"	W702647-S300
3/4"	W702649-S300

COMPONENTS	
Component	Part Number
Orifice Tube	N807115-S
FX-15/FS-10 Manifold	N806959-S
FS-6 Manifold	390697-S
Cycle Switch (R-134a and R-12)	N807083-S
High Side Charge Port and Low Side Pressure Relief Valve (PRV)	W701992-S
High Pressure Switch and Low Side Charge Port	W701993-S
High Side PRV	379737-S
FS-10 Compressor Shaft Seal	F1VY-19D665-A

When servicing A/C systems, refer to the application charts for correct O-ring part numbers.

The contents of O-ring Service kit F3VY-19D690-A* are as follows:

^ Two (2) 391304-S100**

^ Two (2) 391305-S100

^ Two (2) 391396-S100**

^ Four (4) 391397-S100**

* This O-ring kit will be obsolete and new O-rings will need to be ordered separately.

** These Part Numbers have been replaced by new thicker O-rings. They can be used until stock is depleted. The following are replacement

numbers:

^ 391302-S100 replaced by W701993-S

^ 391303-S100 replaced by W701992-S

^ 391304-S100 replaced by W701994-S

^ 391396-S100 replaced by W701993-S

^ 391397-S100 replaced by W701992-S

PART NUMBER	PART NAME
W701993-S	3/8" Spring Lock Coupling And Tube-O Fittings
W701992-S	1/2" Spring Lock Coupling And Tube-O Fittings
W701994-S	5/8" Spring Lock Coupling And Tube-O Fittings
391305-S100	3/4" Spring Lock Coupling And Tube-O Fittings
F3VY-19D690-A	O-Ring Service Kit (See Description In This Article)

Parts Block

OTHER APPLICABLE ARTICLES: 95-2-2

WARRANTY STATUS: INFORMATION ONLY

OASIS CODES: 208000, 208200, 208999

Technical Service Bulletin # **96208** Date: **960923**

A/C - New O Ring Applications

Article No.
96-20-8

09/23/96

^ AIR CONDITIONING - NEW 0-RING APPLICATIONS - THICKER 0-RINGS FOR SPRING LOCK FITTINGS - SERVICE TIP

^ AIR CONDITIONING - SPRING LOCK COUPLING CLEANING PROCEDURE - SERVICE TIP

FORD:
1992-93 FESTIVA
1992-94 TEMPO
1992-97 CROWN VICTORIA, ESCORT, MUSTANG, PROBE, TAURUS, THUNDERBIRD
1994-97 ASPIRE
1995-97 CONTOUR

LINCOLN-MERCURY:
1991-94 CAPRI
1992 MARK VII
1992-94 TOPAZ
1992-97 CONTINENTAL, COUGAR, GRAND MARQUIS, SABLE, TOWN CAR, TRACER
1993-97 MARK VIII
1995-97 MYSTIQUE

LIGHT TRUCK:
1992-96 BRONCO
1992-97 AEROSTAR, ECONOLINE, EXPLORER, F SUPER DUTY, F-150-350 SERIES, F-47, RANGER
1993-97 VILLAGER
1995-97 WINDSTAR
1997 MOUNTAINEER

ISSUE:
A new air conditioning spring lock coupling cleaning procedure has been developed. This procedure is required for a thicker O-ring that has been released for servicing spring lock couplings. These O-rings have a larger cross-sectional diameter for improved sealing. The thicker O-ring is green in color and identifiable only by the part number. These are service only O-rings and will not be used in production.

ACTION:

Clean the Spring Lock Coupling(s) (SLC), if their service is required, and install the new thicker O-rings by referring to the following Service Procedure for details.

SERVICE PROCEDURE

1. Recover refrigerant from the A/C system.

2. Disconnect SLC(s).

3. Remove old O-rings using a plastic O-ring tool and discard. Plastic O-ring Service Tools are available from Rotunda in the R-134a/R-12 Port kit (164R2602) or the 0-Ring Pick/Valve Core Removal Tool kit (164R2604). These items can be ordered by calling 1-800-768-8632 (Mon-Fri, 8AM-5PM EST). When prompted, press choice 2 for dealership supply orders.

4. Check the female SLC O-ring sealing surface for scratches, corrosion, or debris from deteriorated O-rings. Clean any surface residue from the inside of the couplings by using the following procedure (Steps 4a-4j):

   a. Obtain the following shop equipment and cleaning supplies locally:

      ^ 3-1/2" length of steel brazing rod

      ^ YN-9 (mineral) oil for R-12 systems or YN-12-B (PAG) oil for R-134a systems

      ^ Variable speed electric drill

      ^ Safety goggles or glasses

      ^ Lint free cloth

      ^ 12" length of natural fiber string (twine or kite string)

      ^ Abrasive material - maroon colored 3M "Scotch Brite" pad cut in strips as follows:

SLC Size	Abrasive Strip Dimension
3/8"	1" X 2"
1/2"	1" X 2"
5/8"	1" X 3"
3/4"	1" x 4"

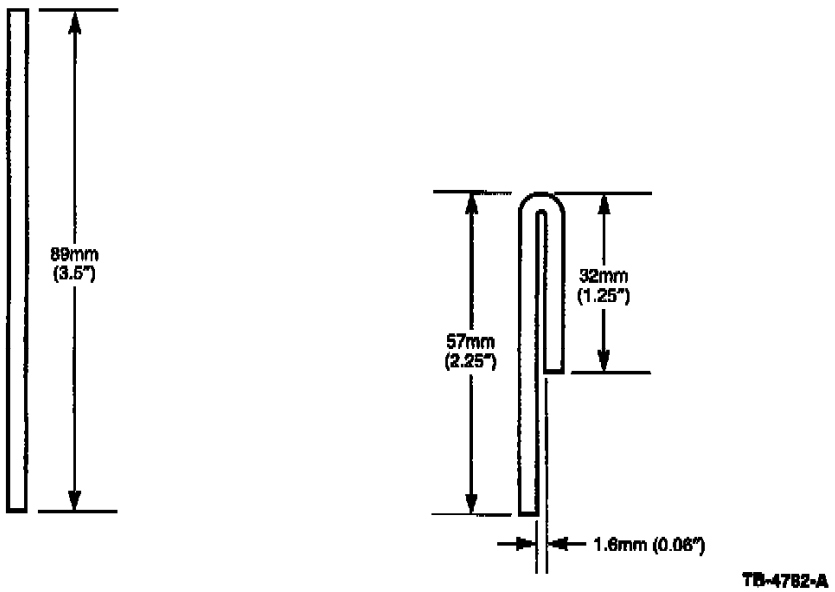

Figure 1

   b. Fabricate a cleaning tool (Figure 1).

   c. Determine coupling size and select the appropriate length of abrasive strip from the Step 4a table.

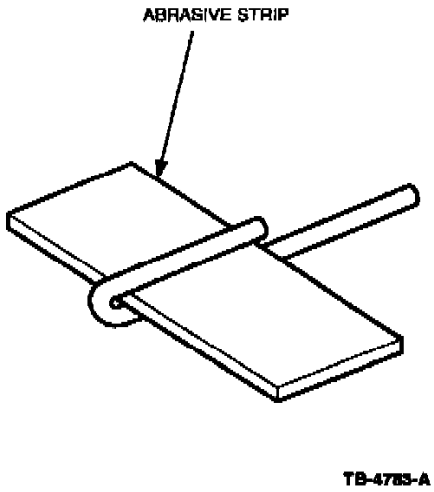

Figure 2

d. Insert abrasive strip into the cleaning tool (Figure 2).

e. Insert completed assembly into drill and tighten chuck securely.

f. Coat the abrasive strip in appropriate refrigerant oil.

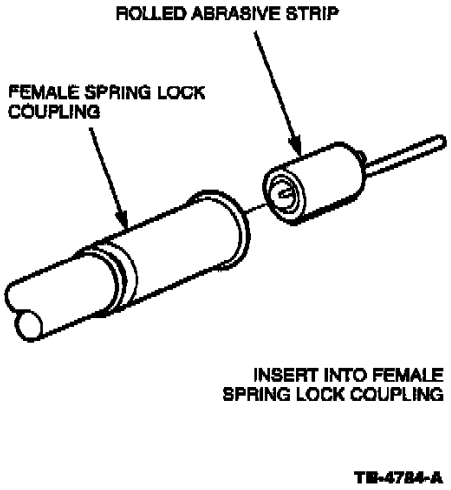

Figure 3

g. Roll abrasive strip around cleaning tool (Figure 3).

NOTE:
DO NOT ALLOW THE DRILL SPEED TO EXCEED 1500 RPM AS TOOL SEPARATION MAY OCCUR.

h. Using a variable speed drill set at a low speed, slowly insert cleaning assembly into the female coupling. Clean using a moderate speed for approximately 1 minute or until surface is clean. Maintain low speed drill rotation while removing the cleaning assembly to prevent axial scratches, which may cause future leaks.

NOTE:
IT IS **IMPORTANT** TO USE A LINT FREE CLOTH TO PREVENT MATERIAL FIBERS FROM REMAINING ON THE 0-RING SEALING SURFACE AND CAUSING FUTURE LEAKS.

i. Remove all cleaning residue from the coupling using a lint free cloth.

REPLACEMENT O-RINGS		
Old Part Number	New Part Number	Part Description
391302-S100	W701993-S	3/8" Spring Lock Coupling And Tube-O Fittings
391303-S100	W701992-S	1/2" Spring Lock Coupling And Tube-O Fittings
391304-S100	W701994-S	5/8" Spring Lock Coupling And Tube-O Fittings
391396-S100	W701993-S	3/8" Spring Lock Coupling And Tube-O Fittings
391397-S100	W701992-S	1/2" Spring Lock Coupling And Tube-O Fittings

j. Inspect O-ring sealing surface for grooves. If grooves or scratches cannot be removed, replace the component.

5. Inspect the male SLC O-ring grooves for scratches, corrosion, or debris from O-ring deterioration. Remove any surface residue from the O-ring grooves by cleaning using the following procedure (Steps 5a-5b):

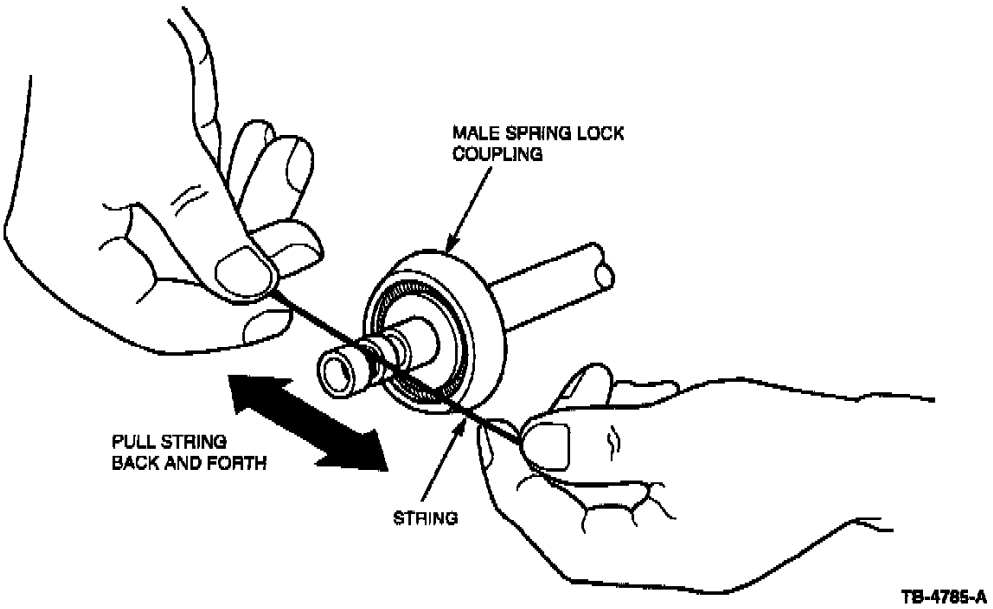

Figure 4

a. Loop the 12" length of natural fiber string around SLC and clean O-ring sealing surface (Figure 4).

b. Remove all cleaning residue using a lint free cloth.

NOTE:
ONLY USE NEW GREEN 0-RINGS. THE USE OF ANY 0-RING SEALS OTHER THAN SPECIFIED MAY ALLOW CONNECTION TO LEAK INTERMITTENTLY DURING VEHICLE OPERATION.

6. Reassemble the SLC by referring to the following procedure (Steps 6a-6e):

a. Lubricate the new O-ring seal using appropriate refrigerant oil.

b. Install new O-rings.

c. Lubricate the inside of the female coupling with the appropriate refrigerant oil.

d. Install plastic indicator ring into cage opening if indicator ring is to be used.

NOTE:
IF THE PLASTIC INDICATOR RING IS USED, IT WILL SNAP OUT OF THE CAGE OPENING WHEN THE COUPLING IS CONNECTED TO INDICATE ENGAGEMENT. IF THE INDICATOR RING IS NOT USED, CHECK THE COUPLING ENGAGEMENT BY VERIFYING THAT THE GARTER SPRING IS OVER THE FLARED END OF THE FEMALE COUPLING.

e. Fit female coupling to male coupling and push with a twisting motion until the garter spring snaps over the flared end of the female fitting.

7. Repeat procedure as necessary for any remaining couplings. Verify seal integrity by leak testing the coupling. If coupling continues to leak, replace the component.

PART NUMBER	PART NAME
W701993-S	3/8" Spring Lock Coupling And Tube-O Fittings
W701992-S	1/2" Spring Lock Coupling And Tube-O Fittings
W701994-S	5/8" Spring Lock Coupling And Tube-O Fittings
391305-S100	3/4" Spring Lock Coupling And Tube-O Fittings

Parts Block

OTHER APPLICABLE ARTICLES: NONE

WARRANTY STATUS: INFORMATION ONLY

OASIS CODES: 208000, 208200, 2O8999

Technical Service Bulletin # **95241** Date: **951204**

Steering Wheel - Off Center After Hard Turn

Article No.
95-24-1

12/04/95

STEERING - ALIGNMENT - STEERING WHEEL OFF CENTER - CLEAR VISION - VEHICLES BUILT THROUGH 3/1/95

FORD:
1993-95 PROBE

ISSUE:
The steering wheel may be at a slightly off center position after a hard left or right turn on some vehicles. This may be caused by the hardness of the steering gear left mounting bushing which allows the steering gear to move sideways slightly.

ACTION:
Confirm that the vehicle does not drift or pull. Check for loose or damaged steering components. Install a revised steering gear left mounting bushing. Refer to the following Service Procedure for details.

CONFIRMATION PROCEDURE

1. Set the front wheels to the straight ahead position. Place a mark on the steering wheel at Point A using tape (Figure 1).

2. With the vehicle stationary, engine running, rotate the steering wheel to its full RH lock position.

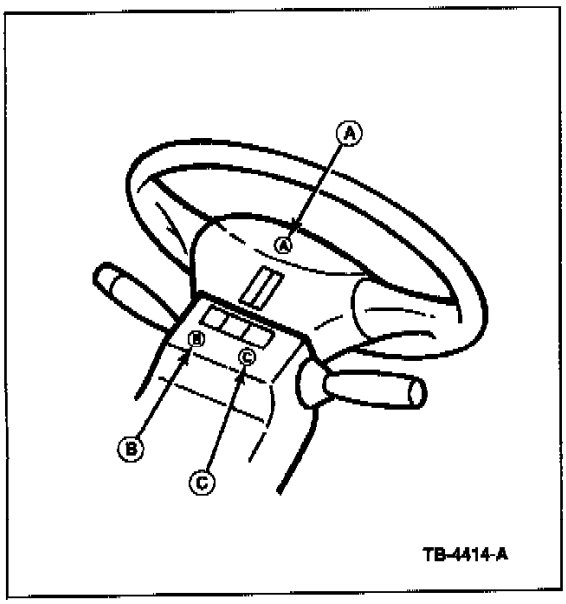

Figure 1

3. Drive the vehicle on a straight road for approximately 0.40 km (1/4 mile). Check and mark the steering column at Point B using tape (Figure 1).

4. With the vehicle stationary, engine running, rotate the steering wheel to its full LH lock position.

5. Drive the vehicle on a straight road for approximately 0.40 km (1/4 mile). Check and mark the steering column at Point C using tape (Figure 1).

6. If the distance between Point B and Point C is greater than 10 mm (0.4"), replace the LH rack bushing following the Service Procedure listed in this TSB article.

7. If the distance between Point B and Point C is less than 10 mm (0.4") and the vehicle does not drift or pull, the vehicle is operating normal to design intent and no action is necessary.

SERVICE PROCEDURE

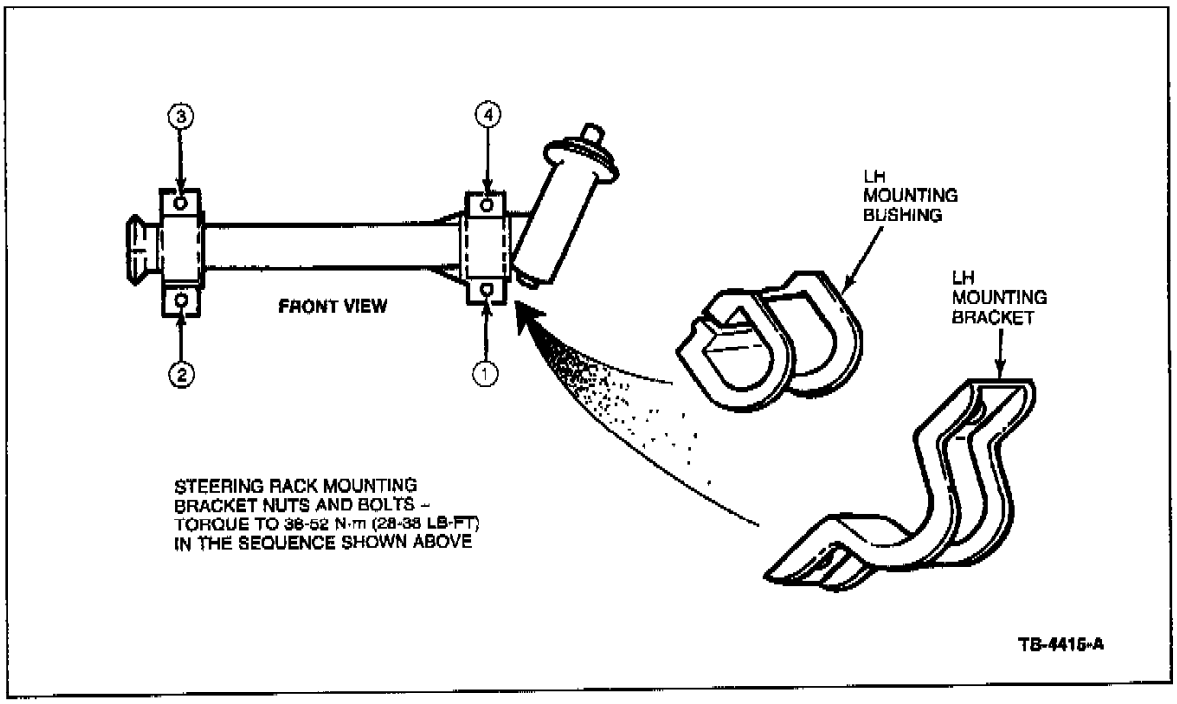

Figure 2

1. Remove the four (4) steering rack mounting bracket nuts and bolts (Figure 2).

2. Pry the LH mounting bracket loose.

3. Remove the LH mounting bushing and discard.

4. Install the new LH mounting bushing (F32Z-3C716-AA).

5. Reinstall the LH mounting bracket.

6. Reinstall the four (4) steering rack mounting nuts and bolts.

7. Torque the nuts to 38-52 N-m (28-38 lb-ft) in the sequence shown in Figure 2.

8. Verify the repair.

PART NUMBER	PART NAME
F32Z-3C716-AA	LH Mounting Bushing

OTHER APPLICABLE ARTICLES: NONE
WARRANTY STATUS: Eligible Under The Provisions Of Bumper To Bumper Warranty Coverage

OPERATION	DESCRIPTION	TIME
952401A	Replace LH Mounting Bushing	0.8 Hr

DEALER CODING

BASIC PART NO.	CONDITION CODE
3C716	36

OASIS CODES: 303000

Technical Service Bulletin # **94B49** Date: **940701**

Overview of Program 94B49

July, 1994

TO: All Ford Dealers

SUBJECT:
Owner Notification Program 94B49 - Certain 1993 Model Year Ford Probes - Shifter Boot Replacement.

OASIS	-	Yes
OWNER LIST	-	Yes
PARTS RETURN	-	No
PROGRAM TIMING	-	Affected vehicles are eligible for this program through June 30, 1995, regardless of mileage. (After June 30, 1995, a vel

AFFECTED VEHICLES
Certain 1993 Model Year Ford Probes equipped with manual transmissions, and produced from Job # 1, 1993 through February 16, 1993.

REASON FOR THIS PROGRAM
The shifter boot on these vehicles is susceptible to premature wear, and may develop cracks in the creased areas.

SERVICE ACTION
To correct this condition, the shifter boot will be replaced on the affected vehicles.

REFUNDS
Only for owner-paid repairs made before the date of the Owner Letter or after the date of the Owner Letter if an emergency repair was made away from the selling dealer.

ATTACHMENTS
Attachment I
- Administrative Information
- Refund Codes

Attachment II
- Labor Allowances
- Parts Ordering Information

Attachment III
- Technical Information

Attachment I - Administrative Information

OASIS
YOU MUST USE OASIS TO DETERMINE IF A VEHICLE IS ELIGIBLE FOR THIS PROGRAM.

PLEASE NOTE
CORRECT ALL VEHICLES IN STOCK BEFORE DELIVERY

PROMPTLY CORRECT
- Affected vehicles on the enclosed list.

- other eligible vehicles which are brought to your dealership.

DEALER-OWNER CONTACT
Immediately contact any owner whose name is not on the list. Give owner a copy of the Owner Letter. Arrange with the owner for a service date.

FCSD CONTACT
Talk with your FCSD Service Zone Manager about program concerns.

FORM 1863
Enter 1863 claims using DWE.

See Warranty and Policy Manual:
- Section 5.6 - 1/Section 6.1 - 24
  (Owner Notification Programs)

OWNER REFUNDS
See Warranty and Policy Manual:

- Section 6.1 - Pages 25 through 26 (Owner Refund)

For owner-paid repairs made before date of the Owner Letter (or after the date of the Owner Letter if an emergency repair was made away from the selling dealer):

- Submit on separate Form 1863 using the codes shown below:

Program Code Box	-	94B49
Causal Basic Part Number	-	7277
Condition Code	-	30
Labor Operation (1st line)	-	REFUND
Labor Operation (2nd line)	-	ALLOW
Administrative Allowance	-	0.2 Hrs.
Customer Concern Code	-	N99

Attachment II - Labor and Parts Information

LABOR ALLOWANCES	HOURS	LABOR OPERATION
Replace Shifter Boot (Includes Remove and Replace Armrest).	0.4 Hrs.	B49B
Replace Shifter Boot (Without Armrest).	0.3 Hrs.	B49C

OWNER NOTIFICATION PROGRAM 94B49
Probe - Shifter Boot

PARTS REQUIREMENTS

Parts will not be direct shipped for this program. Order your parts requirements through normal order processing channels.

PART NUMBER	DESCRIPTION	PRICE	DEALER
F32Z-7277-B	Shifter Boot	$14.39	

Parts prices current until next issue of Master Price Book. For latest prices, check or call your:

- Order Processing Center
- DOES II
- Updated Price Book

CLAIMS PREPARATION

- Use Form 1863
- Enter using DWE
- Use claim information shown below:

Program Code	-	94B49
Causal Basic Part Number	-	7277
Condition Code	-	30
Labor Operation	-	As Appropriate Above
Customer Concern Code	-	N99

Attachment III - Technical Information

OWNER NOTIFICATION PROGRAM 94B49
PROBE - SHIFTER BOOT

SHIFTER BOOT REPLACEMENT

NOTE:
IF VEHICLE IS EQUIPPED WITH A CENTER ARMREST, COMPLETE ALL STEPS OUTLINED BELOW. IF VEHICLE IS NOT EQUIPPED WITH A CENTER ARMREST, PERFORM STEP # 1, THEN PROCEED TO STEP # 6.

ARMREST:

1. Disconnect the battery ground cable.

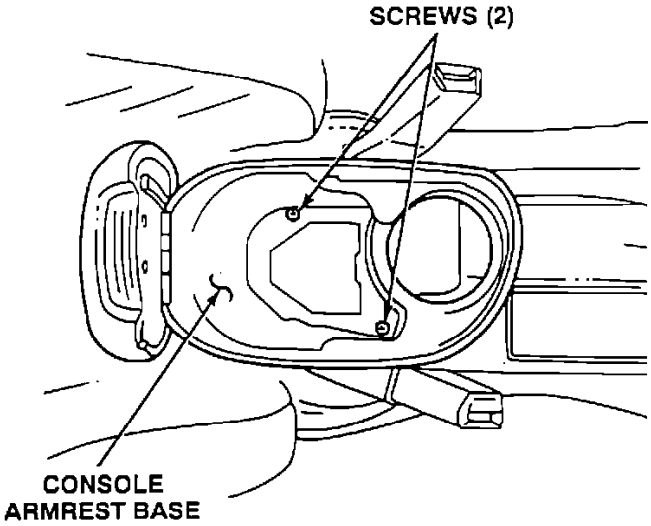

FIGURE 1

2. Open the console armrest and remove the two screws that attach the console armrest base to the console armrest compartment. See Figure 1.

3. Remove the console armrest base.

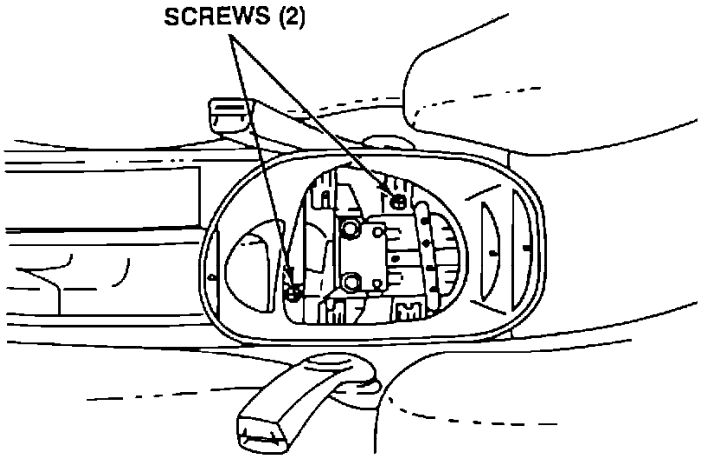

FIGURE 2

4. Remove the two screws that attach the console armrest compartment to the console panel ash receptacle bracket. See Figure 2.

5. Remove the console armrest compartment.

6. If equipped, unsnap the coin tray from the console finish panel.

7. Engage the parking brake control, bringing it to as vertical a position as possible.

8. Empty the instrument panel receptacle.

9. Unscrew the shift control selector lever knob.

10. Remove the console finish panel by gently pulling straight up at each corner and the center to unclip it from the bottom half of the floor console panel.

11. Remove the four screws at the base of the shifter boot, and discard the old shifter boot.

INSTALLATION:

To install, reverse the procedure for removal.

NOTE:
WHEN REINSTALLING THE SHIFTER CONTROL SELECTOR LEVER KNOB, MAKE CERTAIN THAT IT IS PROPERLY ALIGNED.

Owner Letter

Serial Number: 12345678901234567 94B49 Date, here

1993 Ford Probe L4-121 2.0L DOHC VIN A MFI

Mr. John Sample
123 Main Street
Anywhere, USA 12345

Ford Motor Company is providing a no-charge Service Program, Number 94B49, to owners of certain 1993 Model Year Ford Probes equipped with manual transmissions.

REASON FOR THIS PROGRAM
The shifter boot on your vehicle is susceptible to premature wear, and may develop cracks in the creased areas.

NO CHARGE SERVICE
At no charge to you, your dealer will replace the shifter boot in your vehicle.

Affected vehicles are eligible for this program through June 30, 1995, regardless of mileage. (After June 30, 1995, a vehicle is still eligible for this program if it is within the 36 month / 36,000 mile Bumper-to-Bumper warranty).

HOW LONG WILL IT TAKE?
The time needed for this service is about one (1) hour. However, due to service scheduling times, your dealer may need your car for one full working day.

CALL YOUR DEALER
Ask for a service date and if parts are in stock.

If your dealer does not have the parts in stock, they can be ordered before scheduling your service date. Parts would be expected to arrive within a week.

When you bring your car in, show the dealer this letter.

If you misplace this letter, your dealer will still do the work, free of charge.

REFUNDS
If you paid to have this service done before the date of this letter, Ford is offering a full refund. For the refund, please give your paid original receipt to your Ford dealer.

CHANGED ADDRESS OR SOLD THE CAR?
Please fill out the enclosed prepaid postcard and mail it to us if you have changed your address or sold the car.

We are taking this action as part of our ongoing efforts to maintain owner confidence in our products. We hope this program will confirm your continued satisfaction in your Ford built car.Technical Service Bulletin # **98-5A-13** Date: **980318**

Brakes - New Silicone Compound/Grease

Article No.
98-5A-13

03/18/98

^ BRAKES - DISC BRAKE CALIPER SLIDE GREASE - NEW SPECIFICATION - SILICONE BRAKE CALIPER GREASE AND DIELECTRIC COMPOUND ONLY TO BE USED

^ BRAKES - DRUM - SHOE-TO-BACKING PLATE LUBRICATION - NEW LUBRICANT MATERIAL

^ BRAKES - PETROLEUM-BASED LUBRICANT MAY CAUSE SWELLING OF RUBBER PARTS - SERVICE TIP

^ LUBRICANT - SILICONE DIELECTRIC COMPOUND - NEW APPLICATION - SILICONE BRAKE CALIPER GREASE AND DIELECTRIC COMPOUND

FORD:
1984-94 TEMPO
1984-96 MUSTANG, THUNDERBIRD
1985-96 CROWN VICTORIA, ESCORT
1986-96 TAURUS
1989-96 PROBE

1993 Ford Probe L4-121 2.0L DOHC VIN A MFI

1994-96 ASPIRE
1995-96 CONTOUR

LINCOLN-MERCURY:
1982-96 CONTINENTAL
1984-94 TOPAZ
1984-96 COUGAR
1985-96 GRAND MARQUIS
1986-96 SABLE, TOWN CAR
1987-89 TRACER
1991-94 CAPRI
1991-96 TRACER
1993-96 MARK VIII
1995-96 MYSTIQUE

LIGHT TRUCK:
1983-96 RANGER
1986-96 AEROSTAR
1990-96 BRONCO, ECONOLINE, F SUPER DUTY, F-150-350 SERIES
1991-96 EXPLORER
1993-96 VILLAGER
1995-96 WINDSTAR

MEDIUM/HEAVY TRUCK:
1990-91 C SERIES
1990-96 F & B SERIES

ISSUE:
The use of petroleum-based grease as a lubricant in servicing disc brakes is no longer acceptable because it may be incompatible with the rubber material used in the disc brake system. If petroleum-based grease is used to lubricate any part of the disc brake system. it could cause rubber parts to swell if lubricant contacts the rubber material.

ACTION:
Refer to the following Servicing Procedures for details.

DISC BRAKE SERVICING

CAUTION:
DO NOT USE PETROLEUM-BASED SERVICE GREASE (SUCH AS FORD DISC BRAKE CALIPER SLIDE GREASE D7AZ-19590A) TO LUBRICATE DISC BRAKE CALIPER SLIDE PINS OR RUBBER DUST BOOTS. PETROLEUM-BASED GREASE MAY CAUSE EPDM RUBBER TO SWELL.

When servicing any disc brakes, lubricate necessary components by applying Silicone Brake Caliper Grease and Dielectric Compound (D7AZ-19A331-A (Motorcraft WA-10)) or an equivalent silicone compound meeting Ford Specification ESE-M1C171-A. Refer to the appropriate Service Manual for specific service details.

DRUM BRAKE SERVICING

When servicing drum brakes, apply Silicone Brake Caliper Grease and Dielectric Compound (D7AZ-19A331-A (Motorcraft WA-10)) or an equivalent silicone compound meeting Ford Specification ESE-M1C171-A to the contact points between the brake shoes and the drum backing plates for lubrication.

NOTE:
DISC BRAKE CALIPER SLIDE GREASE D7AZ-1959O-A SHOULD NO LONGER BE USED FOR DISC BRAKE CALIPER SLIDE LUBRICATION.

OTHER SERVICE APPLICATIONS

Existing inventory of D7AZ-19590-A may be used for all other Service Manual procedures. Once material is exhausted, all vehicle procedures specifying Disc Brake Caliper Slide Grease (D7AZ-19590-A) should use Silicone Brake Caliper Grease and Dielectric Compound (D7AZ-19A331-A).

PART NUMBER	PART NAME
D7AZ-19A331-A	Brake Caliper Grease And Compound

OTHER APPLICABLE ARTICLES: NONE
SUPERSEDES: 95-21-2
WARRANTY STATUS: INFORMATION ONLY

OASIS CODES: 301000 Technical Service Bulletin # **99-19-4** Date: **990920**

Brakes - Vibration/Inspection Service Tips

Article No.
99-19-4

09/20/99

BRAKES - GUIDELINES FOR BRAKE VIBRATION
REPAIR, BRAKE INSPECTION, AND FRICTION
MATERIAL REPLACEMENT - SERVICE TIP

FORD:
1993 FESTIVA
1993-1994 TEMPO
1993-1997 PROBE, THUNDERBIRD
1993-1999 ESCORT
1993-2000 CROWN VICTORIA, MUSTANG, TAURUS
1994-1997 ASPIRE
1995-2000 CONTOUR
1998-2000 ESCORT ZX2
2000 FOCUS
1993-1996 BRONCO
1993-1997 AEROSTAR
1993-1998 F SUPER DUTY
1993-2000 ECONOLINE, EXPLORER, F-250 LD, RANGER
1995-2000 WINDSTAR
1997-2000 EXPEDITION
1999-2000 SUPER DUTY F SERIES

LINCOLN:
1993-1998 MARK VIII
1993-2000 CONTINENTAL, TOWN CAR
2000 LS
1998-2000 NAVIGATOR

MERCURY:
1993-1994 TOPAZ
1993-1997 COUGAR
1993-1999 TRACER
1993-2000 GRAND MARQUIS, SABLE
1995-2000 MYSTIQUE
1999-2000 COUGAR
1993-2000 VILLAGER
1997-2000 MOUNTAINEER

ISSUE
This TSB serves as a guideline for servicing and diagnosing brake vibration, brake inspection, and brake friction material replacement.

ACTION
Refer to the following text and illustrations for servicing brakes.

SERVICE PROCEDURES AND RELATED LABOR OPERATIONS

Diagnosis	• Verify concern. Brake vibration concerns are caused by uneven disc wear or lining transfer and should be verified with a test drive (refer to Workshop Manual, NVH Section 100-04-1) since these conditions are difficult properties to measure with available shop tools. • Check OASIS and TSBs for vehicle-specific brake concerns.
Inspect (2001B)	• Remove wheel/tire. • Remove caliper. • Inspect linings, replace if thickness is below specification or if cracks wide enough to see through down to the backing plate are present. Use Labor Operation 2001B1 for replacement. • Inspect rotors. — Replace if cracked. — Resurface if diagnosis has revealed vibration in the steering wheel, seat or pedal while braking. Heavily scored rotors, similar to that caused by linings worn down to the backing plate, should also be turned. • Measure rotor thickness and record measurement. Replace if below the minimum thickness specification. • Perform other repairs as necessary (i.e., turning, caliper replacement, etc.). • Reinstall pads and calipers. • Install wheels using impact guns equipped with Rotunda AccuTorq® sockets. **NOTE: USING AN IMPACT TOOL WITHOUT AN ACCUTORQ® SOCKET WILL LEAD TO UNEVENLY TORQUED LUG NUTS. THIS CAUSES ROTOR ON-VEHICLE LATERAL RUNOUT (LRO) AND EVENTUALLY DISC THICKNESS VARIATION (DTV) AND BRAKE ROUGHNESS.** • Check brake operation before returning vehicle to customer.
Pad/Shoe Replacement (2001B1)	• Retrieve new pads/shoes from part crib.
Turning (2001B2 or 2001B3)	• For rotors that require machining, replace rotor if thickness is less than 0.60mm (0.024") above the minimum thickness specification cast in the rotor, this will insure that the rotor will be above minimum thickness after turning. Do not machine new rotors. • For vehicles with two-piece hub/rotor: — Mark rotor and wheel stud for proper indexing during re-assembly. — Remove rotor. • Remove corrosion from wheel mounting surface, both rotor mounting surfaces, and hub mounting surface. A die grinder with a Scotchbrite® surface conditioning disc is recommended. **CAUTION: DO NOT USE AN ABRASIVE SANDING DISC SINCE IT WILL REMOVE PAINT/PROTECTIVE FINISH FROM WHEEL AND/OR METAL FROM MOUNTING SURFACES, THUS ADVERSELY AFFECTING CORROSION PROTECTION AND ROTOR LATERAL RUNOUT.** • For vehicles with two-piece hub/rotor, reinstall rotor onto hub, aligning with marks from Step 6a. • Machine rotors using Rotunda Hub-Mount Brake Lathe/Pro-Cut (201-00002). **NOTE: READ THE ENTIRE OPERATING MANUAL AND VIEW THE VIDEO SHIPPED WITH THE LATHE BEFORE INSTALLING, OPERATING, OR SERVICING THE LATHE.** — Install hub adapter and silencer belt (where applicable). — Install cutting lathe. — Adjust lathe oscillation using a dial indicator. **NOTE: TOTAL INDICATED READING (TIR) TARGET IS 0.000mm, MAXIMUM IS 0.08mm (0.003").** — Center cutting head, adjust cutting bits, and install chip deflector. **NOTE: DEPTH OF CUT SHOULD BE BETWEEN 0.10 AND 0.20mm (0.004 AND 0.008"). LIGHTER CUTS WILL CAUSE THE BIT TO HEAT UP AND WEAR FASTER, HEAVIER CUTS WILL CAUSE POOR ROTOR SURFACE FINISH.** — Machine rotor. — Remove lathe and silencer belt. • Remove adapter. • Remove metal shavings. • For vehicles with two-piece hub/rotor: — Remove rotor from hub. — Remove metal shavings from hub and rotor mounting surfaces and from ABS sensors. — Apply High Temperature Nickel Anti-Seize Lubricant (F6AZ-9L494-AA) to hub mounting surface to prevent future corrosion. — Match marks on rotor and hub and assemble rotor to hub.

TB-5840-A

Figure 1

Several service procedures relating to brake vibration, system inspection, and pad/shoe replacement have been revised. Detailed descriptions of the service procedures are shown in Figure 1.

Please note the changes for turning brake rotors. Criteria for sufficient rotor thickness before turning has been added to reduce the number of rotors that are replaced or turned to a dimension below the minimum thickness specification.

Final Lateral Runout (LRO) and disc thickness measurements have also been deleted since proper rotor measurement and machine adjustment will insure that these dimensions are within specification.

COMPREHENSIVE LIST OF NEW BRAKE LABOR OPERATIONS

Operation Description			Current	Revised
Brake Shoes/Pad Assemblies – Hydraulic (2001/2007/2200) – Inspect Includes removal and reinstallation of wheels, calipers, and pads or drums; clean, measure rotor or drun; inspect and install	Disc/Drum	Front	2001AF	2001BF
	Disc/Drum	Rear	2001AB	2001BB
	Disc/Drum	All	2001AT	2001BT
	Disc/Disc	Front	2001AFA	2001BFA
	Disc/Disc	Rear	2001ABB	2001BBB
	Disc/Disc	All	2001ACT	2001BCT
Brake Shoes/Pad Assemblies – Hydraulic (2001/2007/2200) – Replace	Disc/Drum	Front	2001A1F	2001B1F
	Disc/Drum	Rear	2001A1B	2001B1B
	Disc/Drum	All	2001A1T	2001B1T
	Disc/Disc	Front	2001A1FA	2001B1FA
	Disc/Disc	Rear	2001A1BB	2001B1BB
	Disc/Disc	All	2001A1CT	2001B1CT
Disc Brake Rotor Front Machine on Vehicle (1102/2C026/2C027/1126) – Machine	Pro-Cut	One	2001A25P	2001B2P
		Both	2001A25PT	2001B2PT
Disc Brake Rotor Rear Machine on Vehicle (2211/2C027/2212) – Machine	Pro-Cut	One	2001A26P	2001B3P
		Both	2001A26PT	2001B3PT
SUPPLEMENTS **Extra time to disconnect driveshaft for vehicles with limited slip axles.**			2001A26ZE	2001B3ZE
Brake Drum (1126) – Machine		One	2001A7	2001B4
		Both	2001A7T	2001B4T
Disc Brake Rotor (1102/1014) – Replace	Front	One	2001A5F	2001B5F
		Both	2001A5FT	2001B5FT
	Rear	One	2001A5B	2001B5B
		Both	2001A5BT	2001B5BT
		All	2001A5T	2001B5T
Brake Drum – Rear (1126) – Replace		One	2001A24	2001B6
		Both	2001A24AT	2001B6T
Caliper Assembly – Disc Brake (2B120/2B121/2552/2553) – Overhaul Includes disconnecting brake line and component bleed. **Do not use with Operation 2001A10.**	Front	One	2001A9F	2001B7F
		Both	2001A9FT	2001B7FT
	Rear	One	2001A9B	2001B7B
		Both	2001A9BT	2001B7BT
		All	2001A9T	2001B7T
Caliper Assembly – Disc Brake (2B120/2B121/2552/2553) – Replace Includes disconnecting brake line and component bleed.	Front	One	2001A10F	2001B8F
		Both	2001A10FT	2001B8FT
	Rear	One	2001A10B	2001B8B
		Both	2001A10BT	2001B8BT
		All	2001A10T	2001B8T
Rear Wheel Cylinder (1102/1014) – Replace Includes component bleed.		One	2001A2	2001B9
		Both	2001A2T	2001B9T
Shoe Assembly – Parking Brake (2N712/2140) – Remove, Install, Adjust or Replace			2001A16	2001B10
			Deleted	**Use**
Disc Brake Rotor – Front (1102/1125) – Replace			1102B	2001B5
Disc Brake Rotor – Front Machine on Vehicle (1102/1125) – Machine			1102F	2001B2
Disc Brake Rotor – Rear Machine on Vehicle (1102/2C026/2C027) – Machine			1102G	2001B3
Brake Drum – Rear (1126) – Replace			1126A	2001B6
Brake Drum – Rear (1126) – Machine			1126B	2001B4

TB-5841-A

Figure 2

As part of this change, all car and light truck repairs will now be sequenced under labor operation 2001B, labor operation 2001A will remain in effect for medium and heavy duty truck applications. A unique labor operation for brake pad/shoe replacement, 2001B1, was added along with a consolidation of all turning operations into two labor operations, 2001B2xx and 2001B3xx. A comprehensive list of brake labor operations are listed in Figure 2. These new codes will be in the October Service Labor Time Standards release.

OTHER APPLICABLE ARTICLES: NONE

WARRANTY STATUS: INFORMATION ONLY

OASIS CODES: 301000

Technical Service Bulletin # **96107** Date: **960506**

Fuel - California Reformulated Gasoline

Article No.
96-10-7

1993 Ford Probe L4-121 2.0L DOHC VIN A MFI

05/06/96

FUEL - CALIFORNIA REFORMULATED GASOLINE (CARFG) - SERVICE TIP

FORD:
1983-86 LTD
1983-88 EXP
1983-96 CROWN VICTORIA, ESCORT, MUSTANG, THUNDERBIRD
1985-94 TEMPO
1986-96 TAURUS
1989-96 PROBE
1995-96 CONTOUR

LINCOLN-MERCURY:
1980-83 MARK VI
1983-88 LN7
1983-96 COUGAR, GRAND MARQUIS, TOWN CAR
1984-92 MARK VII
1985-94 TOPAZ
1986-96 SABLE
1991-96 TRACER
1993-96 CONTINENTAL, MARK VIII
1995-96 MYSTIQUE

LIGHT TRUCK:
1983-96 BRONCO, ECONOLINE, F-150-350 SERIES, RANGER
1984-90 BRONCO II
1986-96 AEROSTAR
1987-96 F SUPER DUTY
1991-96 EXPLORER
1993-96 VILLAGER
1995-96 WINDSTAR

ISSUE:
California introduced CaRFG around March 1, 1996 and statewide it must be available at all service stations by June 1, 1996 to help reduce emissions and improve gasoline quality. It will replace the traditional gasoline sold in Northern California and improve the reformulated gasoline that has been sold in Southern California since January 1995. California Air Resources Board (CARB) projects smog forming emissions from motor vehicles to be reduced by about 15 percent.

ACTION:
The following text is provided to give some answers to some commonly asked questions by our customers.

POSITION

Ford Motor Company recommends the use of CaRFG as a cost effective means of reducing emissions to provide cleaner air. We have participated in vehicle and laboratory testing of CaRFG to make sure it is acceptable for our customers' use. There are no unusual vehicle performance concerns expected based upon these studies. The use of CaRFG will not affect Ford's new vehicle and/or emissions warranty.

WHAT DOES CaRFG CONSIST OF?

CaRFG consists of the same basic components as other gasolines, but it reduces pollution because of its cleaner burning components. Features are:

^ reduced aromatic hydrocarbons to form less smog emissions

^ added oxygenates to reduce emissions

^ decreases the amount of fuel evaporating from the vehicle

^ lowered sulfur content to provide more efficient operation of the vehicle's catalytic converter

^ reduced benzene by about one-half

IS CaRFG MORE HAZARDOUS THAN CONVENTIONAL GASOLINES?

CaRFG is a hazardous substance like conventional gasoline. Precautions should continue to be taken to avoid exposure to vapors or liquid when it is pumped or handled. It should never be siphoned or swallowed.

HOW WILL CaRFG AFFECT VEHICLE PERFORMANCE?

Properly blended CaRFG should have no adverse effect on vehicle performance or the durability of engine and fuel system components. Its basic properties are not significantly different than other cleaner burning gasolines that have been used in the U.S. for several years.

If the vehicle is a certified California calibration 1996 or later model year, it was designed to operate on CaRFG gasoline. The vehicle will operate satisfactorily on gasolines in the other 49 states, but emission control system performance may be affected. Using gasolines other than CaRFG have substantially increased emissions from motor vehicles.

WILL THE USE OF CaRFG AFFECT CALIFORNIA VEHICLE WARRANTY?

No. The coverage of Ford's new vehicle warranty is not affected. In fact, Ford Owner Guides have consistently approved the use of properly blended reformulated gasolines containing oxygenates. Further information about properly fueling your vehicle is included in the Owner Guide.

WILL FUEL ECONOMY BE AFFECTED?

A very small reduction in fuel economy of less than one-half mile per gallon is possible if the customer was using gasoline without oxygenates. This is attributed to the lower energy content of oxygenates which have been in all Southern California gasolines since January of 1995 and in some gasolines since the 1970's.

Many factors affect fuel economy like driving habits, vehicle maintenance, weather conditions, etc. Fuel economy can vary by more than a mile per gallon from one fill-up to the next with the same gasolines.

For further details see TSB Article 95-12-2 for customer expectations regarding fuel economy.

ARE SPECIAL ADDITIVES NECESSARY FOR CaRFG?

No. It is not necessary to add anything to the vehicle fuel tank after the gasoline is purchased from the service station. California regulations require deposit control additives in CaRFG to minimize port fuel injector and intake valve deposits.

WILL OLDER VEHICLES OPERATE SATISFACTORILY WITH THE NEW CaRFG?

Older vehicles are expected to operate satisfactorily on CaRFG because vehicles have been operating on gasolines similar to CaRFG for a number of years. However, considerable testing indicates that older, high mileage vehicles are more susceptible to fuel system problems due to age and normal wear and tear regardless of whether they are operated on conventional or CaRFG gasolines. Owners of these older vehicles are encouraged to follow their vehicle manufacturer's recommendations regarding vehicle maintenance.

WILL THE SMELL BE DIFFERENT THAN CONVENTIONAL GASOLINE?

CaRFG is not expected to smell different than the gasoline most vehicles are currently using. If an unusual odor is noticed, it would probably be from oxygenates. Most service stations use vapor recovery systems to minimize the release of gasoline vapors while refueling.

The use of CaRFG should result in little or no "rotten egg" smell from the exhaust because CaRFG has much lower sulfur than conventional gasoline.

WAS CaRFG TESTED BEFORE INTRODUCTION?

It was tested for over five million miles in more than 800 vehicles under the guidance of CARB including experts representing automobile manufacturers, gasoline suppliers, fleet operations and government. There was no increase in problems identified with the use of CaRFG.

DOES CaRFG COST MORE?

The price at the pump cannot be accurately predicted, although a modest increase is likely. The price of CaRFG is subject to the competitive forces in the marketplace. Many factors including production costs, supply and demand, weather, crude oil prices, and taxes affect gasoline prices.

WHERE CAN I GET MORE INFORMATION ON CaRFG?

Additional information within the state of California on CaRFG is available from the California Air Resources Board toll-free at 1-800-922-7349 (within California only).

OTHER APPLICABLE ARTICLES: 95-12-2

WARRANTY STATUS: INFORMATION ONLY

OASIS CODES: 404000, 623000

Technical Service Bulletin # **98-26-2** Date: **990104**

Fuel - Volatility Related Driveability Concerns

Article No.
98-26-2

1993 Ford Probe L4-121 2.0L DOHC VIN A MFI

01/04/99

FUEL - INFORMATION ON GASOLINE - TIPS TO RESOLVE VOLATILITY RELATED DRIVEABILITY CONCERNS

FORD:
1985-97 THUNDERBIRD
1986-99 MUSTANG, TAURUS
1987-99 ESCORT
1988-94 TEMPO
1989-97 PROBE
1990-99 CROWN VICTORIA
1992-93 FESTIVA
1995-99 CONTOUR

LINCOLN-MERCURY:
1985-97 COUGAR
1986-92 MARK VII
1986-99 SABLE
1987-89 TRACER
1988-94 TOPAZ
1988-99 CONTINENTAL
1990-99 GRAND MARQUIS, TOWN CAR
1991-99 TRACER
1993-98 MARK VIII
1995-99 MYSTIQUE
1999 COUGAR

LIGHT TRUCK:
1986-97 AEROSTAR
1987-96 BRONCO
1989-97 F SUPER DUTY, F-350
1989-99 F-150, F-250 LD, RANGER
1991-99 EXPLORER
1992-99 ECONOLINE
1993-99 VILLAGER
1995-99 WINDSTAR
1997-99 EXPEDITION, MOUNTAINEER
1998-99 NAVIGATOR
1999 SUPER DUTY F SERIES

MEDIUM/HEAVY TRUCK:
1990-97 F-700

This TSB article is being republished in its entirety to expand vehicle model coverage and revise the text.

ISSUE
Some vehicles using winter blend fuels may exhibit a stall on start up and a no restart, hard start condition or a no start condition in unseasonably hot weather (greater than 27°C/80°F). These concerns may be related to fuel volatility from winter blend fuels during winter-spring and autumn-winter transitions and may result in a fuel pump vapor lock condition. This condition may appear to be a fuel pump failure but may be caused by winter blend fuel.

ACTION
Refer to the following text for further information.

NOTE

FUEL TANK ADDITIVES WILL NOT RESOLVE THESE CONCERNS BECAUSE VAPOR FORMS FROM CAVITATION WITHIN THE FUEL PUMP.

FILLING THE TANK TO FULL MAY BE EFFECTIVE. ADVISE CUSTOMER TO USE THE RECOMMENDED OCTANE GRADE PER OWNER MANUAL AND NOT A HIGHER GRADE.

Explain to the customer that this concern may be due to a low tank level of winter blend fuel combined with unseasonably warm weather. Advise customer that filling the fuel tank to full may be effective in resolving this concern. Also, advise customer to use the recommended octane grade per their Owner Manual and not a higher grade.

BACKGROUND
Gasolines are seasonally adjusted, meaning they have higher volatility (vaporize easier) in the winter and lower volatility in the summer.

1993 Ford Probe L4-121 2.0L DOHC VIN A MFI

Government mandates to improve air quality have resulted in significant changes to gasolines, such as the mandatory use of oxygenates (ethanol, methyl tertiary butyl ether (MTBE), and others) in the winter or the reduction of Reid Vapor Pressure (RVP) in the summer. The addition of oxygenates (especially ethanol) increases volatility while the reduction of RVP reduces volatility.

Gasoline distribution practices often do not allow branded marketers to have much control over their gasoline's volatility other than RVP. Oxygenate (e.g., ethanol, MTBE) use is more dependent on local gasoline markets, rather than specific marketers practice. Therefore, it is difficult to recommend specific brands to avoid volatility related complaints.

OTHER APPLICABLE ARTICLES: 91-8-13

SUPERSEDES: 96-5-4

WARRANTY STATUS: INFORMATION ONLY

OASIS CODES: 402000, 404000, 602300, 603300,
607000, 607400, 608000, 608400,
609000, 609400, 610000, 611000,
611500, 612000, 614000, 614500,
623000

Technical Service Bulletin # **93S78** Date: **950901**

Recall - Child Restraint Tether Bolt Replacement

93S78

SAFETY RECALL

1993 Model Year Probe - Child Restraint Tether Anchorage Bolt Kit

Dealer Letter

Attachment I
^ Administrative Information

Attachment II
^ Labor Allowances
^ Parts Ordering Information
^ Parts Return

Attachment III
^ Technical Instructions

Customer Notification Letter

Attachment I - Administrative Information

OASIS
Use OASIS to determine vehicle eligibility for this or other service actions.

Tell owners of any other uncompleted service action. Attempt to complete all service actions during a single visit by the owner.

Promptly Perform Recall On:
Affected vehicles on the enclosed list.

Other affected vehicles brought to your dealership.

All affected vehicles in dealer stock before sale or delivery to owners.

Dealer-Owner Contact/Action
Immediately contact any owner of an affected vehicle whose name does not appear on the enclosed list. Arrange a service date. Give the owner a copy of the owner letter. Replace the Child Tether Anchorage Bolt Kit with kit part number F42Z-61613D74-AA and sticker the two pages of the Owner Guide. Mutilate and scrap the removed kit.

Ask the customer if the old child restraint Anchorage Bolt Kit, provided with the vehicle, had been installed. If so, advise the customer that the anchor nut also requires replacement (refer to Attachment III) and arrange a service date.

Report name and address changes or corrections using DREWAR application on your DCS terminal (refer Warranty and Policy Manual Section 8.0). Use DAWIS to identify the current record.

Reimbursement For Completion And Claims Preparation Instructions
Refer to Warranty and Policy Manual Section 6.3 pages 8-13.

1993 Ford Probe L4-121 2.0L DOHC VIN A MFI

93S78 must be shown in the Recall box.

Attachment II - Labor and Parts Information

Labor Allowances

DESCRIPTION	LABOR TIME	LABOR CODE
Inspection of Body End Panel Weld Nuts. Confirmation and if required: Installation of new Sticker Pages (2) in Owner Guide; Replacement of Child Restraint Tether Anchorage Bolt Kit from Glove Compartment	0.3 Hrs.	A
Install one New Child Restraint System Tether Anchor Nut Plate (includes Inspection above) (See Note 2 Below)	1.5 Hrs.	B
Install Two New Child Restraint System Tether Anchor Nut Plates (Includes Inspection above) (See Note 2 Below)	1.9 Hrs.	C
Administrative Allowance (See Note 1 Below)	0.1 Hrs.	

NOTE:

1: Add the 0.1 hour Administrative Allowance to the total labor time before inputting.

NOTE:

2: This input will result in an overnight Warranty Claim Return Facsimile. Return replaced body end panel nut plate(s) with the Warranty Claims Facsimile copy to the Warranty Parts Evaluation Centre. Parts and Facsimile not returned within 90 days will result in claim chargeback.

Parts Ordering Information

Order your parts requirements through normal order processing channels from your Servicing Parts Distribution Centre.

PART NUMBER	DESCRIPTION
F32Z-61624K86-A	Kit-Child Restraint Seat Tether Nut Repair
F3AZ-19515-SA	Superseal (Package of 12)

NOTE:

Claim $1.00 per vehicle for one side repair (For use with Labor Code B repairs.)

Claim $2.00 per vehicle for both sides repair (For use with Labor Code C repairs.)

Additional Information

Owners will be mailed:

^ A new "Child Restraint Tether Anchorage Bolt Kit" (Part No. F42Z-61613D74-AA) and;

^ two Owner Guide sticker pages (for pages 33 and 34). Owners of vehicles in Quebec will also receive French copy Owner Guide sticker pages.

If additional Owner Guide sticker pages are required, they may be obtained at no charge by calling RENKIM at 1-800-344-5621. Please provide:

^ Your Dealer Code

^ Recall Number 93S78

^ Indicate sticker pages language preference--English or French

^ VIN of Vehicle

^ Individual's name at dealership whose attention the sticker pages should be sent to

Attachment III - Technical Instructions

Technical Instructions

NOTE:

Customers may return vehicles because they are unsure if the incorrect Child Restraint Tether Anchorage Bolt Kit had been installed. Under these circumstances, follow the INSPECTION procedure described below.

Inspection

1. Remove rear interior trim panel.

2. Inspect thread area of the Child Restraint Tether Anchor Nut(s) (check both nuts).

3. If there is any evidence of thread galling or stripping, proceed to CHILD RESTRAINT SYSTEM TETHER ANCHOR NUT REPAIR section of this attachment.

4. If there is no evidence of thread damage:

   a. reinsert the 1/4 inch rubber plugs (or equivalents) into the anchorage nut.

   b. ensure that the new Child Tether Kit (identified with part number F42Z-61613D74-AA is in the vehicle glove box and that the old kit is removed, mutilated and scrapped.

   c. ensure Owner Guide has been stickered with the revised pages (pages 33 and 34).

All vehicles built for sale in Canada include a tether anchor hardware kit for use with Canadian child safety seats.

All vehicles built for sale in the USA do not include a tether anchor hardware kit for use with child safety seats. However, attachment holes (at each rear seating position) have been provided in your vehicle to attach the tether anchor hardware. Tether anchor hardware kits can be obtained at no charge from any Ford or Lincoln-Mercury dealer. Be sure to follow the child safety seat manufacturer's instructions.

Installing the Anchor Bracket

1. **Open the liftgate and take out the luggage compartment cover (if equipped).**
2. **The anchorage nuts used to secure the tether anchor are located in the rear body panel behind the trim at the rear of the luggage compartment. Remove the trim panel. The backside of the panel is scored at the locations of the anchorage nuts. Make a hole the size of the scoring in the anchor nut. The hole should be made on the same side of the vehicle as the child safety seat will be located. Reinstall the trim panel.**
3. **Install the hardware for anchoring the tether following the instructions in the tether anchorage hardware kit.**
4. **Re-install luggage compartment cover.**

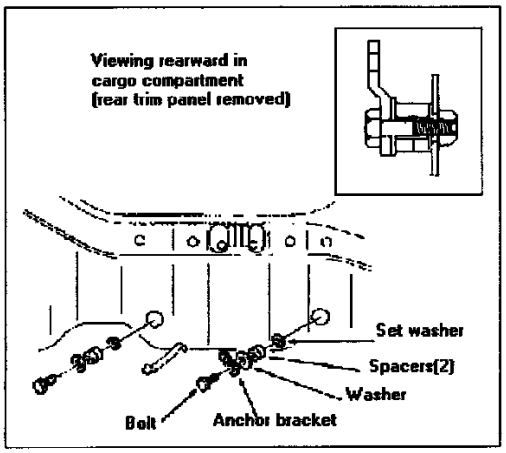

Installing the anchor bracket

Warning: The anchorage nuts in the rear body panel have an 8 mm metric non-locking thread. A torque wrench is required to firmly secure the bolt to the weld nut. Some child restraints supply a non-metric bolt with a different thread. Do noy use a non-metric bolt as it may be impossible to screw it all the way into the hole, resulting in inadequate retention of the child restraint. If you need a metric bolt or assistance, any Ford or Lincoln-Mercury dealer will be happy to assist you.

Warning: If the anchor bolt(s) are ever removed, the hole(s) in the rear panel must be sealed to prevent the possibility of exhaust fumes entering the passenger compartment.

1993 Probe

IR93S78A

5. Install rear interior trim panel.

6. Release vehicle.

TECHNICAL INSTRUCTIONS CHILD RESTRAINT SYSTEM TETHER ANCHOR NUT REPAIR 1993 PROBE
Kit Contents - Part No. F32Z-61624K86-A

PART NUMBER	DESCRIPTION	QUANTITY
	Nut Plate (Painted and Drilled)	2
	Bolt M6	4
	Nut M6	4

	Rubber Plug	2
I.S.8160A	Instruction Sheet	1

NOTE:
Only use this repair procedure if other than an 8 mm bolt was used to retain the child restraint system tether anchor.

1. Remove

   a. Trunk lower side and rear trim panels. (Refer to 1993 Probe Shop manual, Section 01-05, pages 1 and 5).

   b. Rear combination lamp assembly. (Refer to 1993 Probe Shop Manual, Section 17-01, page 17-01-53).

   c. Rear license plate, rear bumper cover and foam insert. Do not remove rear bumper. (Refer to 1993 Probe Shop Manual, Section 01-19, pages 4 and 5).

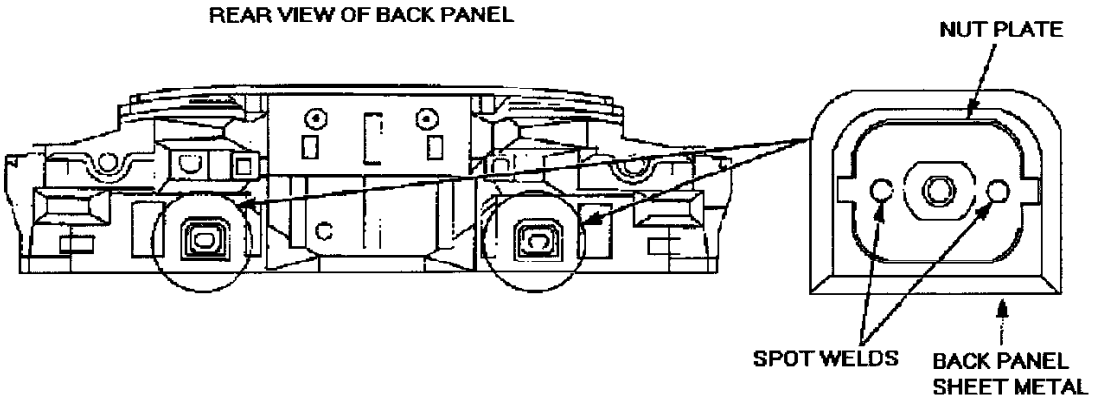

Figure 1

2. Locate the Child Restraint Tether anchor nut plate(s). (Refer to Figure 1)

   a. Remove and keep rubber plug(s) from weld nut(s).

   b. From the outside of the vehicle drill out the two (2) spot welds on the nut plate(s), in which the improper bolt was installed, with an 8 mm (5/16 inch) diameter drill to remove the welded-in nut plate.

   NOTE:

   ^ Center punch the spot welds to prevent the drill from wandering.

   ^ As an aid to removing the welded-in nut plate(s), after drilling out the spot weld(s), use a stiff flat scraper to pry nut plate from the back panel.

   ^ Clean the exposed surface area using a wire brush.

3. Fit the new nut plate onto the outside surface of the back panel in the same location occupied by the removed nut plate. Retain in position with an 8 mm Child Restraint Seat Tether bolt from Kit (Part No. F42Z-61613D74-AA, located in vehicle glove box). (SCREWED IN FROM INSIDE OF VEHICLE).

4. Locate the two corner holes in the new nut plate(s):

   a. Using a 6.5 mm (1/4 inch) diameter drill, and these holes as guides, drill out the back panel (from back of vehicle towards front of vehicle).

5. Loosen the 8 mm tether bolt(s) and remove the new nut plate(s).

   a. Remove any burrs from the inside of the back panel.

   b. Using SUPER SEAL (Part No. F3AZ-19515-SA), or equivalent, liberally coat the area (on the back panel) occupied by the nut plate(s).

   NOTE:
   Place a cloth on the inside surface over the holes to avoid SUPER SEAL overspray onto vehicle interior.

   c. Using SUPER SEAL (Part No. F3AZ-19515-SA), or equivalent, coat the inner back panel area from which the burrs were removed.

d. Reinstall the new nut plate(s) using the 8 mm tether bolt(s).

6. Install the two M6 bolts and nuts:

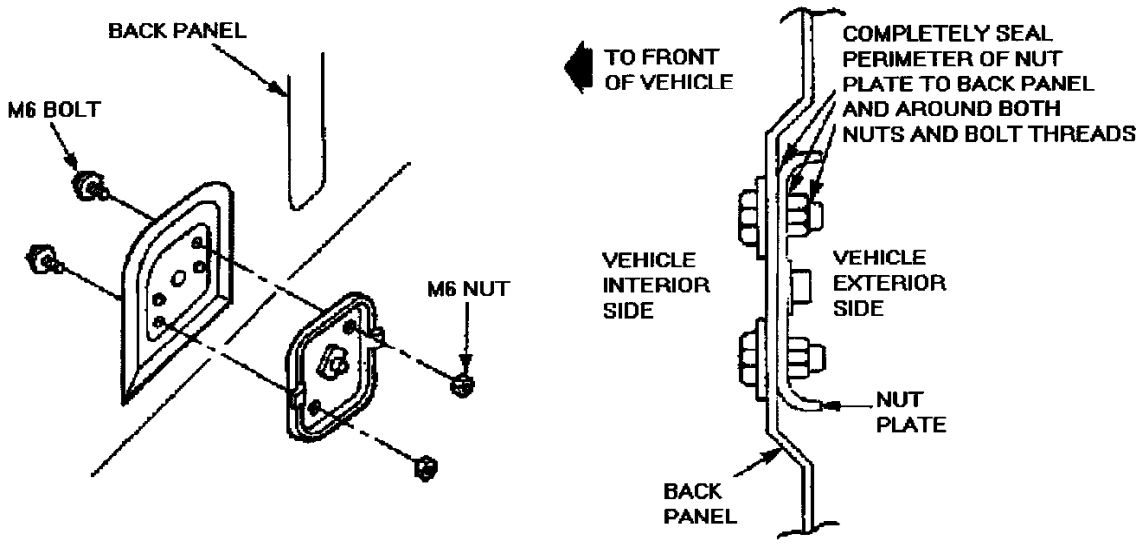

Figure 2

a. Torque to 8.3 +/- 1.5 N-m (6.1 +/- 1.1 lb.-ft.). (Refer to Figure 2)

7. Completely seal the perimeter of the nut plate(s) to the back panel and around the nuts and bolts (thread area) using SUPER SEAL (Part No. F3AZ-19515-SA), or equivalent. (Refer to Figure 2)

8. Remove the Child Restraint Tether anchor bolt installed in Step 5. Clean off any SUPER SEAL material on this bolt.

9. If customer DOES NOT WANT the Child Restraint Tether Anchor Kit installed:

a. Keep the anchor bolt(s), removed in Step 8, with the Anchor Kit package in vehicle glove box for future use.

b. Install rubber plug(s) (from inside of vehicle) into the anchorage nut(s).

10. If customer WANTS the Child Restraint Tether Anchor Kit installed:

a. Make a hole(s) the size of the scoring in the rear trim panel to provide access to the anchorage nut(s). The backside of the trim panel is scored at the location(s) of the anchorage nut(s).

b. Keep the rubber plug(s) removed in Step 2 with the Anchor Kit in the glove box for future use.

NOTE:
Install the tether anchor bolt(s) after step 11 is completed (per the anchor kit instructions). Torque to 22.1 +/- 4.5 N-m (16.3 +/- 3.3 lb.-ft.).

11. Reinstall the rear foam insert, bumper cover, rear combination lamp assembly, license plate, trunk lower side and rear trim panel. (Refer to 1993 Probe Shop Manual, sections 01-19, 17-01 and 01-05).

Dealer Letter

To:
ALL FORD OF CANADA DEALERS

Attention:
Dealer Principal
Service Manager
Parts Manager

Subject:
Safety Recall 93S78 - 1993 Model Year Probe - Child Restraint Tether Anchorage Bolt Kit

IN OASIS
YES

1993 Ford Probe L4-121 2.0L DOHC VIN A MFI

Listings
YES

Parts Return
YES (Refer Attachment II).

Recall Time Limitation
None

^ Please read and circulate these instructions to your Service and Parts personnel.

^ Dealership personnel should become familiar with this recall and be able to respond to owner inquiries.

^ Please ensure servicing technicians understand and comply with the technical instructions for this recall.

Vehicles Affected
All 1993 Model Year Probe.

Reason For Recall
The Child Restraint Tether Anchorage Bolt Kit originally provided with the vehicle contains 5/16 inch x 24 UNF bolts. The weld nuts affixed to the body end panel, into which the anchorage bolts are to be installed, contain 8 mm x 1.25 mm threads. Although testing has confirmed that the combination of a National Fine Thread bolt and a Metric nut meets the strength requirements of Canada Motor Vehicle Safety Standard 210.1, even after several bolt removals and reinstallations, the original design intent was for a metric bolt.

In addition, information concerning the installation of the Child Restraint Tether Anchorage Bolt Kit contained in the Owner Guide (pages 33 and 34) is incorrect.

Service Action
Owners of record will be mailed two revised stick-on Owner Guide pages and a new Child Restraint Tether Anchorage Bolt Kit containing two 8 mm x 1.25 mm anchor bolts. This new Kit will be identified with Part Number F42Z-61613D74-AA.

Owners will be requested to return their vehicles to dealers for replacement of the body end panel mounted weld nut if the incorrect 5/16 bolt has previously been installed.

There will be no charge to owners for these services.

COMPANY CONTACTS: (For dealer use only)

CONCERN NATURE	CONTACT ACTIVITY	NUMBER
Technical	Technical Assistance Hotline	1-800-665-3577
Claiming Procedures	Warranty Claims Hotline	1-800-667-0088
Owner Concerns	Customer Assistance Centre Hotline	1-800-565-3673
General Administrative	Richard Neumann	(905) 845-2511 Ext. 1495
		Facsimile (905) 845-7069
General Administrative	Glenys McLeod	(905) 845-2511 Ext. 1494
		Facsimile (905) 845-7069

Attachments

Attachment I
^ Administrative Information

Attachment II
^ Labor Allowances
^ Parts Ordering Information
^ Parts Return

Attachment III
^ Technical Instructions

Owner Letter

J. Sample
123 Main Street

1993 Ford Probe L4-121 2.0L DOHC VIN A MFI

Anywhere, Prov.
ANA NAN

This notice is sent to you under the requirements of the Motor Vehicle Safety Act of Canada.

Ford Motor Company of Canada, Limited (Ford) has determined that a defect which relates to motor vehicle safety exists in certain 1993 Model Year Probes. Our records show you own the vehicle with the serial number shown above your name and address.

Safety Defect:
The Child Restraint Tether Anchorage Bolt Kit provided with the vehicle contains 5/16 inch bolts. The weld nuts affixed to the body end panel, into which the anchorage bolts are to be installed, contain 8 mm threads. Although testing has confirmed that the combination of a National Fine Thread bolt and a Metric nut meets the strength requirements of Canada Motor Vehicle Safety Standard 210.1, even after several bolt removals and reinstallations, the original design intent was for a metric bolt. In addition, information concerning the installation of the bolt contained in the Owner Guide is incorrect.

What You Should Do:
Please remove and scrap the Child Restraint Tether Anchorage Bolt Kit originally supplied with your vehicle. Replace it with the enclosed new kit identified with part number F24Z-61613D74-AA.

Also please open your Owner Guide to pages 33 and 34. Carefully remove the paper backing from the enclosed sticker pages (one at a time). Apply the sticker page to the appropriate page in the Owner Guide.

Repairs:
If you have installed the Bolt Kit originally supplied with your vehicle, immediately contact your Ford or Mercury dealer to arrange for replacement of the rear body panel anchorage nut(s) at no charge to you.

How Long Will It Take?
The time needed for this service is about two hours. However, due to service scheduling times, your dealer nay need your vehicle for one full working day.

Call Your Dealer:
Call your dealer without delay if you installed the Bolt Kit originally supplied with your vehicle. Ask for a service date for Safety Recall 93S78. Also ask your dealer to check the OASIS system for any other service actions that may be required on your vehicle. If your dealer does not have the parts in stock, they can be ordered before scheduling your service date. Parts would be expected to arrive within a week.

When you bring your vehicle in, show the dealer this letter. If you misplace this letter, your dealer will still do the work, free of charge.

Changed Your Name, Address, or Sold the Vehicle?
If you have changed your name or address, or have sold the vehicle, please complete the enclosed prepaid postcard. Sign and date it, and mail the card to Ford.

If you have leased this vehicle to another person or organization, please immediately notify the lessee of this recall. Provide them with a copy if this letter, the enclosed Anchorage Bolt Kit and the revised Owner Guide sticker pages.

Contact the Ford "Customer Assistance Centre" at the address identified in the letterhead of this letter if any further help is needed. Please identify your vehicle's serial number in any correspondence.

We regret the inconvenience this service may cause you. We want you to have the work done for your safety and satisfaction with your Ford-built vehicle.Technical Service Bulletin # **94B53** Date: **940901**

Overview of Program 94B53

September, 1994

TO: All Ford Dealers

SUBJECT:
Owner Notification Program 94B53 - Certain 1993/1994 Model Year Ford Probes, and Certain 1994 Model Year Ford Aspires - Owner Guide Revision - Child Restraint Seat Tether Anchor Installation.

OASIS - No
OWNER LIST - No
PARTS RETURN - No

AFFECTED VEHICLES

1993 Model Probes built from Job # 1, through August 30, 1993. 1994 Model Ford Probes built from Job # 1, through February 15, 1994. Also, 1994 Model Aspires released from February 1, 1994 through March 2, 1994.

REASON FOR THIS PROGRAM

The Owner Guide furnished with some of the affected vehicles does not describe the proper method of securing the child restraint seat tether anchor. This could result in improper installation of the child restraint seat tether anchor bolt.

SERVICE ACTION

To correct this condition, owners of the affected vehicles will be mailed correction sticker pages and asked to affix them to their Owner Guide as follows:
* 1993 Model Year Ford Probes, pages 33 and 34.
* 1994 Model Year Ford Probes, pages 52 and 53.
* 1994 Model Year Aspires, pages 56 and 57.

Owners may also return to their dealer to have the corrected sticker pages affixed.

ATTACHMENTS

Attachment I
- Administrative Information

Attachment II
- Labor Allowances
- Parts Ordering Information

Attachment I - Administrative Information

OASIS

THIS PROGRAM WILL NOT APPEAR IN OASIS.

PLEASE NOTE
CORRECT ALL VEHICLES IN STOCK BEFORE DELIVERY

PROMPTLY CORRECT

- Affected vehicles on the enclosed list.

- Other eligible vehicles which are brought to your dealership.

DEALER-OWNER CONTACT

Immediately contact any owner whose name is not on the list. Give owner a copy of the Owner Letter. Arrange with the owner for a service date.

FCSD CONTACT

Talk with your FCSD Service Zone Manager about program concerns.

FORM 1863

Enter 1863 claims using DWE.

See Warranty and Policy Manual:

- Section 5.6 - 1/Section 6.1 - 24
  (Owner Notification Programs)

Attachment II - Labor and Parts Information

OWNER NOTIFICATION PROGRAM 94B53 OWNER GUIDE CORRECTION

PARTS REQUIREMENTS

NONE
Owners will be mailed correction sticker pages to be affixed to their car's Owner Guide as follows:
1993 Model Year Ford Probes, pages 33 and 34.
1994 Model Year Ford Probes, pages 52 and 53.
1994 Model Year Aspires, pages 56 and 57.

Owners may also return to their dealer to have the corrected sticker pages affixed. Refer to the following labor allowance and claim processing information.

Note:
If additional sticker pages are required, they may be obtained at no charge by calling Renkim Corporation on 1-800-352-5621.

1993 Ford Probe L4-121 2.0L DOHC VIN A MFI

LABOR ALLOWANCES	HOURS	LABOR OPERATION
Affix Correction Stickers to Pages of Owner Guide Stated Above	0.2 Hrs.	B53B

CLAIMS PREPARATION

- Use Form 1863
- Enter using DWE
- Use claim information shown below:

Program Code	- 94B53
Causal Basic Part Number	- MISC
Condition Code	- 08
Labor Operation	- B53B
Customer Concern Code	- N99

Owner Letter - 1993 Ford Probe

Serial Number: 12345678901234567 94B53 Kit BB September, 1994

Mr. John Sample
123 Main Street
Anywhere, USA 12345

REASON FOR THIS LETTER

The Owner Guide included with your 1993 Ford Probe does not describe the proper method of securing the child restraint seat tether anchor. This could result in improper installation of the child restraint seat tether anchor bolt.

NEW PAGES PROVIDED WITH THIS LETTER

In order to provide the information necessary to properly secure the child restraint seat tether anchor, we have enclosed new Owner Guide sticker pages with this letter. Please affix these new sticker pages over the existing pages in your car's Owner Guide.

ATTACHING THE PAGES

Peel off the protective backing and affix these new pages over pages 33 and 34 of your Owner Guide.

CONTACT YOUR DEALER

If you would like the sticker pages affixed for you, contact your dealer. Be sure that you bring this letter and the new sticker pages with you when you visit your dealer. There is no charge to you for this service.

We are taking this action as part of our ongoing efforts to maintain owner confidence in our products. We hope this program will confirm your continued satisfaction in your Ford Probe.

Owner Letter - 1994 Ford Probe

Serial Number: 12345678901234567 94B53 Kit CC September, 1994

Mr. John Sample
123 Main Street
Anywhere, USA 12345

REASON FOR THIS LETTER

The Owner Guide included with your 1994 Ford Probe does not describe the proper method of securing the child restraint seat tether anchor. This could result in improper installation of the child restraint seat tether anchor bolt.

NEW PAGES PROVIDED WITH THIS LETTER

In order to provide the information necessary to properly secure the child restraint seat tether anchor, we have enclosed new Owner Guide sticker pages with this letter. Please affix these new sticker pages over the existing pages in your car's Owner Guide.

ATTACHING THE PAGES

Peel off the protective backing and affix these new pages over pages 52 and 53 of your Owner Guide.

CONTACT YOUR DEALER

If you would like the sticker pages affixed for you, contact your dealer. Be sure that you bring this letter and the new sticker pages with you when you visit your dealer. There is no charge to you for this service.

We are taking this action as part of our ongoing efforts to maintain owner confidence in our products. We hope this program will confirm your continued satisfaction in your Ford Probe.

Owner Letter - 1994 Ford Aspire

Serial Number: 12345678901234567 94B53 Kit DD September, 1994

Mr. John Sample
123 Main Street
Anywhere, USA 12345

REASON FOR THIS LETTER

The Owner Guide included with your 1994 Ford Aspire does not describe the proper method of securing the child restraint seat tether anchor. This could result in improper installation of the child restraint seat tether anchor bolt.

NEW PAGES PROVIDED WITH THIS LETTER

In order to provide the information necessary to properly secure the child restraint seat tether anchor, we have enclosed new Owner Guide sticker pages with this letter. Please affix these new sticker pages over the existing pages in your car's Owner Guide.

ATTACHING THE PAGES

Peel off the protective backing and affix these new pages over pages 56 and 57 of your Owner Guide.

CONTACT YOUR DEALER

If you would like the sticker pages affixed for you, contact your dealer. Be sure that you bring this letter and the new sticker pages with you when you visit your dealer. There is no charge to you for this service.

We are taking this action as part of our ongoing efforts to maintain owner confidence in our products. We hope this program will confirm your continued satisfaction in your Ford Aspire.

Technical Service Bulletin # **95512** Date: **950313**

A/C - Adding Refrigerant Oil Service Tip

Article No.
95-5-12

03/13/95

AIR CONDITIONING - ADDING REFRIGERANT OIL - SERVICE TIP

FORD:
1990-93 FESTIVA
1990-94 TEMPO
1990-95 CROWN VICTORIA, ESCORT, MUSTANG, PROBE, TAURUS, THUNDERBIRD
1994-95 ASPIRE

LINCOLN-MERCURY:
1990-92 MARK VII
1990-94 TOPAZ
1990-95 CONTINENTAL, COUGAR, GRAND MARQUIS, SABLE, TOWN CAR, TRACER
1991-94 CAPRI
1993-95 MARK VIII
MERKUR:
1990 SCORPIO

LIGHT TRUCK:
1990 BRONCO II
1990-95 AEROSTAR, BRONCO, ECONOLINE, F SUPER DUTY, F-150-350 SERIES, RANGER
1991-95 EXPLORER

1993 Ford Probe L4-121 2.0L DOHC VIN A MFI

1993-95 VILLAGER
1995 WINDSTAR

MEDIUM/HEAVY TRUCK:
1990-91 C SERIES, CL-CLT-9000 SERIES
1990-95 CARGO SERIES, F & B SERIES, L SERIES

ISSUE:
Current repair procedures do not advise on the addition of refrigerant oil to the A/C system when a minor repair is made.

ACTION:
Add 0.06 L (2 oz) of the proper type new refrigerant oil to the system,. before recharging, when servicing concerns that do not require major component replacement. Repairs considered minor are: O-ring leaks, charge port leaks, Pressure Relief Valve (PRV) leaks, compressor shaft seal leaks, hose leaks, etc. Remember to use polyalkylene glycol (PAG) oil with R-134a systems and mineral oil with R-12 systems.

OTHER APPLICABLE ARTICLES: NONE

WARRANTY STATUS: INFORMATION ONLY

OASIS CODES: 208000, 208999Technical Service Bulletin # **9218B4** Date: **920904**

TSB Description

Article No.
92-18B-4

09/04/92

SHOP MANUAL - 1993 - PAGES 01-05-6 AND 7 - PACKAGE TRAY REMOVAL AND INSTALLATION PROCEDURES REVISED

FORD:
1993 PROBE

ISSUE:
Package Tray Removal and Installation procedures require revision to identify the forward package tray tie down cords. Pages 01-05-6 and 7 of the 1993 Probe Service Manual are affected.

ACTION:
Refer to the pages in this TSB article for the revised information.

OTHER APPLICABLE ARTICLES: NONE
WARRANTY STATUS: INFORMATION ONLY
OASIS CODES: 190000

2. Carefully pull the liftgate side trim away from the liftgate to disengage the clips.

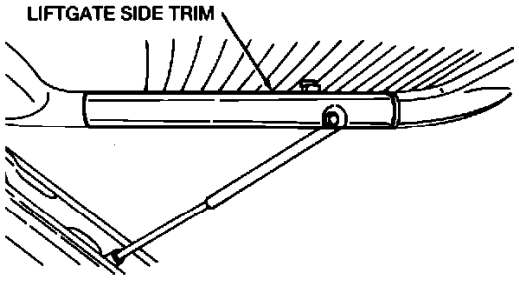

3. Remove the liftgate side trim.

Installation

1. Align the clips on the liftgate side trim with the corresponding holes in the liftgate.
2. Press the liftgate side trim firmly into place.
3. Install the package tray lift cords.

Liftgate Upper Trim

Removal

1. Remove the liftgate side trim. Refer to the procedure in this section.
2. Remove the push tab located on the high-mount brake lamp.

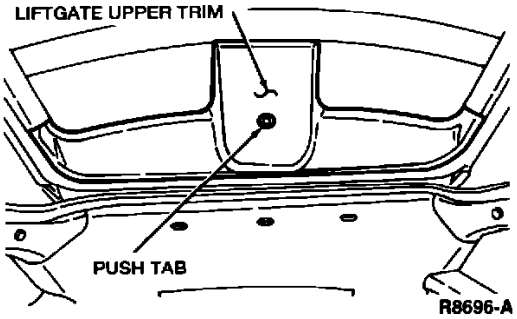

3. Carefully pull the liftgate upper trim away from the liftgate to disengage the clips.
4. Remove the liftgate upper trim.

Installation

To install, reverse the removal procedure.

Liftgate Lower Trim

Removal

1. Remove the liftgate side trim. Refer to the procedure in this section.
2. Carefully pull the liftgate lower trim away from the liftgate to disengage the clips.

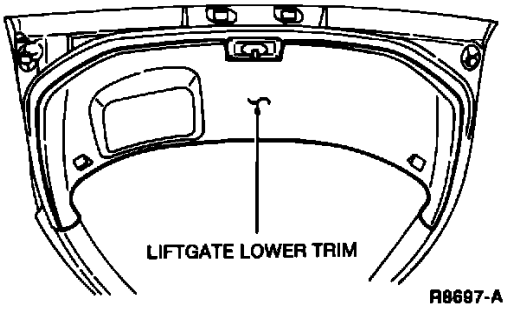

3. Remove the liftgate lower trim.

Installation

1. Align the clips on the liftgate lower trim with the corresponding holes in the liftgate.
2. Press the liftgate lower trim firmly into place.
3. Install the liftgate side trim.

Package Tray

Removal

1. Open the liftgate.

2. Disconnect the two rear package tray liftcords from the liftgate side trim.

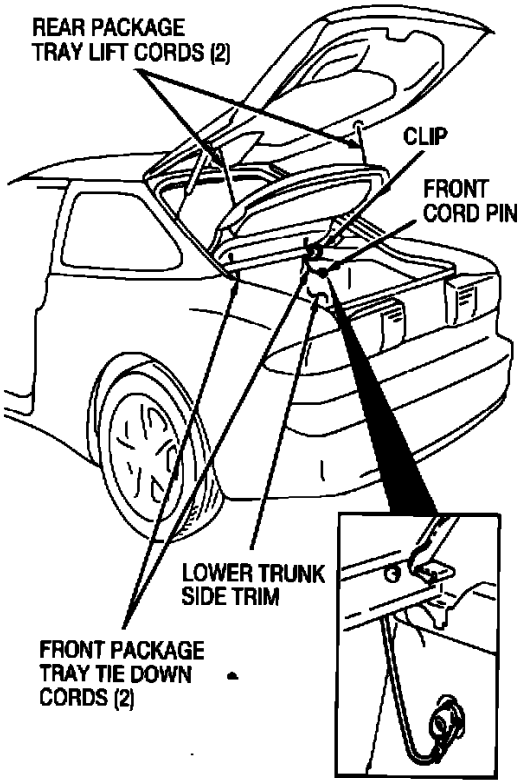

R9007-A

3. Disconnect the two front package tray tie down cords from the lower trunk side trim.
4. Remove the package tray by raising and pulling toward the rear of the vehicle.

Installation

NOTE: Ensure all four liftcords are secured during installation.

To install, reverse the removal procedure.

Carpeting

Removal

1. Remove the front seats. Refer to Section 01-10.
2. Remove the rear seats. Refer to Section 01-10.
3. Remove the quarter trim panel. Refer to the procedure in this section.
4. Remove the floor console. Refer to Section 01-12.
5. Remove the scuff plates. Refer to the procedure in this section.
6. Remove the fuel door cable and liftgate latch cable control lever cover.
7. Remove the kick panels. Refer to the procedure in this section.
8. Remove the front seat belt anchor bolt and cover. Refer to Section 01-20.
9. Make a cut in the carpet between the gearshift lever (MTX) or selector lever (4EAT) and the dash control panel support.
10. Remove the plastic clips securing the carpet to the floor.
11. Remove the carpet.

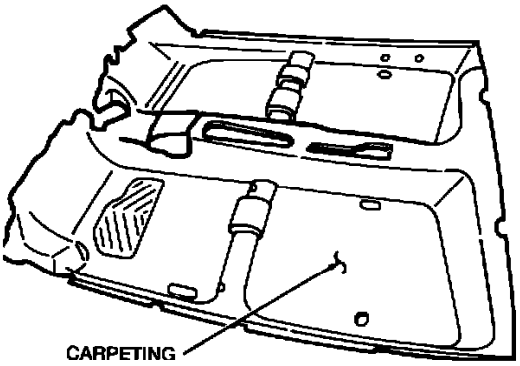

R8699-A

Installation

To install, reverse the removal procedure.

Headliner

Removal

1. Remove the dome lamp assembly. Refer to Section 17-01A.
2. Remove the four visor screws.
3. Disconnect both visor mirror lamp connectors and remove the visor.
4. Remove the A, B, and C-pillar trim. Refer to the procedures in this section.
5. On vehicles equipped with a roof opening panel, remove the seaming welt attaching the headliner to the roof opening.
6. Bend the steel retaining tangs from the weld seam.
7. If required, remove the coat hooks by pulling the hook from the bottom to release the clip.
8. Remove the three plastic clips located at the rear of the headliner.
9. Remove the two plastic clips located at the B-pillar.

Revised 9/92

Technical Service Bulletin # **92183** Date: **920826**

Rear Package Tray - Revised Service Procedure

Article No.
92-18-3

08/26/92

PACKAGE TRAY - SERVICE PROCEDURE - UPDATE

FORD:
1993 PROBE

ISSUE:
Service Manual removal and installation procedures have been updated for the package tray assembly. The new procedure now identifies the forward package tray tie down cord.

1993 Ford Probe L4-121 2.0L DOHC VIN A MFI

ACTION:
When removing or installing the package tray assembly, refer to the following procedure for service details.

REMOVAL AND INSTALLATION PROCEDURE

1. Open the liftgate

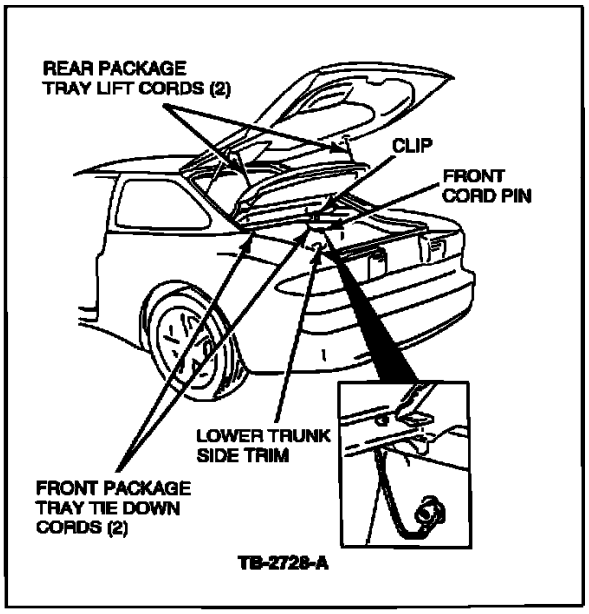

Figure 1

2. Disconnect the two rear tray liftcords from the liftgate trim. Refer to Figure 1.

3. Disconnect the two front package tray tie down cords from the lower trunk side trim. Refer to Figure 1.

4. Remove the package tray by raising and pulling toward the rear of the vehicle.

5. To install, reverse the removal procedure.

NOTE:
ENSURE ALL FOUR LIFTCORDS ARE SECURED DURING INSTALLATION.

WARRANTY STATUS:
INFORMATION ONLY

OASIS CODES:
190000

Technical Service Bulletin # **98-17-1** Date: **980901**

Seat Leather - Cleaning Procedure Tips

Article No.
98-17-1

09/01/98

SEAT - LEATHER CLEANING PROCEDURE - SERVICE TIP

FORD:
1984-94 TEMPO
1984-97 THUNDERBIRD
1984-98 CROWN VICTORIA, ESCORT, MUSTANG
1986-98 TAURUS
1989-97 PROBE
1994-97 ASPIRE
1995-98 CONTOUR

LINCOLN-MERCURY:
1984-94 TOPAZ
1984-97 COUGAR

1993 Ford Probe L4-121 2.0L DOHC VIN A MFI

1984-98 GRAND MARQUIS, TRACER
1984-99 TOWN CAR
1986-98 SABLE
1993-98 MARK VIII
1995-98 MYSTIQUE
1995-99 CONTINENTAL
1999 COUGAR

LIGHT TRUCK:
1983-98 RANGER
1984-96 BRONCO
1984-97 F-250 HD
1984-98 ECONOLINE, F-150, F-250 LD
1986-97 AEROSTAR
1991-98 EXPLORER
1993-98 VILLAGER
1996-98 WINDSTAR
1997-98 EXPEDITION, MOUNTAINEER
1998 NAVIGATOR
1999 SUPER DUTY F SERIES

This TSB article is being republished in its entirety to include the latest level parts and to include a revised Service Procedure.

ISSUE

The following TSB contains information regarding the cleaning of interior leather seats and trim. Improper cleaning procedures may damage the leather. If seats are not cleaned on a regular basis (every 4-6 weeks), normal wear and tear can cause excessive soiling.

ACTION

Ford Motor Company has developed a new kit (Deluxe Leather Care Kit - F8AZ-19G253-AA) to clean soiled seats without damaging the top coat of the leather. The kit contains a leather and vinyl cleaner along with a specially formulated sponge.

Refer to the text for cleaning leather seats and trim.

The Deluxe Leather Care Kit has been tested and approved for use on all Ford and Lincoln/Mercury leather and vinyl seating surfaces, and if used as directed, should be used for service repairs. Many household cleaners and sponges are too harsh to be used on leather and may actually cause permanent damage to the surface.

Use this material on leather and vinyl seats that:

^ show excessive soiling

^ have been stained with coffee, lipstick, etc.

Refer to the instructions included in the kit for specific application procedures.

After cleaning surface with cleaner and sponge, wipe area with water and a cotton cloth.

NOTE
AVOID EXCESSIVE APPLICATION OF CLEANER ALONG STITCHING.

PART NUMBER	PART NAME
F8AZ-19G253-AA	Deluxe Leather Care Kit

OTHER APPLICABLE ARTICLES: NONE

SUPERSEDES: 97-14-2

WARRANTY STATUS: INFORMATION ONLY

OASIS CODES: 101000, 107000, 190000