eLEARN

MASSE

191 - Giulietta

EARTHS - DESCRIPTION

The following diagram shows the various earths on the car.The associated circuits are shown for each earth.

This makes it easy to identify the earthed circuits on an individual line: faults and failures are therefore easier to locate in the case of problems that affect more than one function: for example, oxidation of an earth may put several circuits and numerous functions out of service simultaneously.

EARTHS - FUNCTIONAL DESCRIPTION

The earths present on the vehicle, categorised according to their relationship with the various wires, are as follows.

Radiator wiring:

- fan earch C045

Engine compartment wiring:

- front left earth C010A - C010B

- front right earth C011

- front ABS earth C012

- engine management control unit earth C060

- passenger side dashboard earth C020B (versions with TCT transmission)

Dashboard wiring:

- earth on central tunnel C038

- Air Bag system earth C050A

Rear wiring:

- passenger side dashboard earth C020

- rear left earth C030A - C030B

- rear right earth C031

- Air Bag system earth C050B

Negative battery wiring:

- battery earth on engine (on gearbox) C002

- battery earth on body C003

Engine wiring:

- compressor earth C039

- earth on engine C040

Air conditioning/heater wiring:

- air conditioning unit earth C016

Electric steering wiring:

- electric steering earth C014

EARTHS - WIRING DIAGRAM

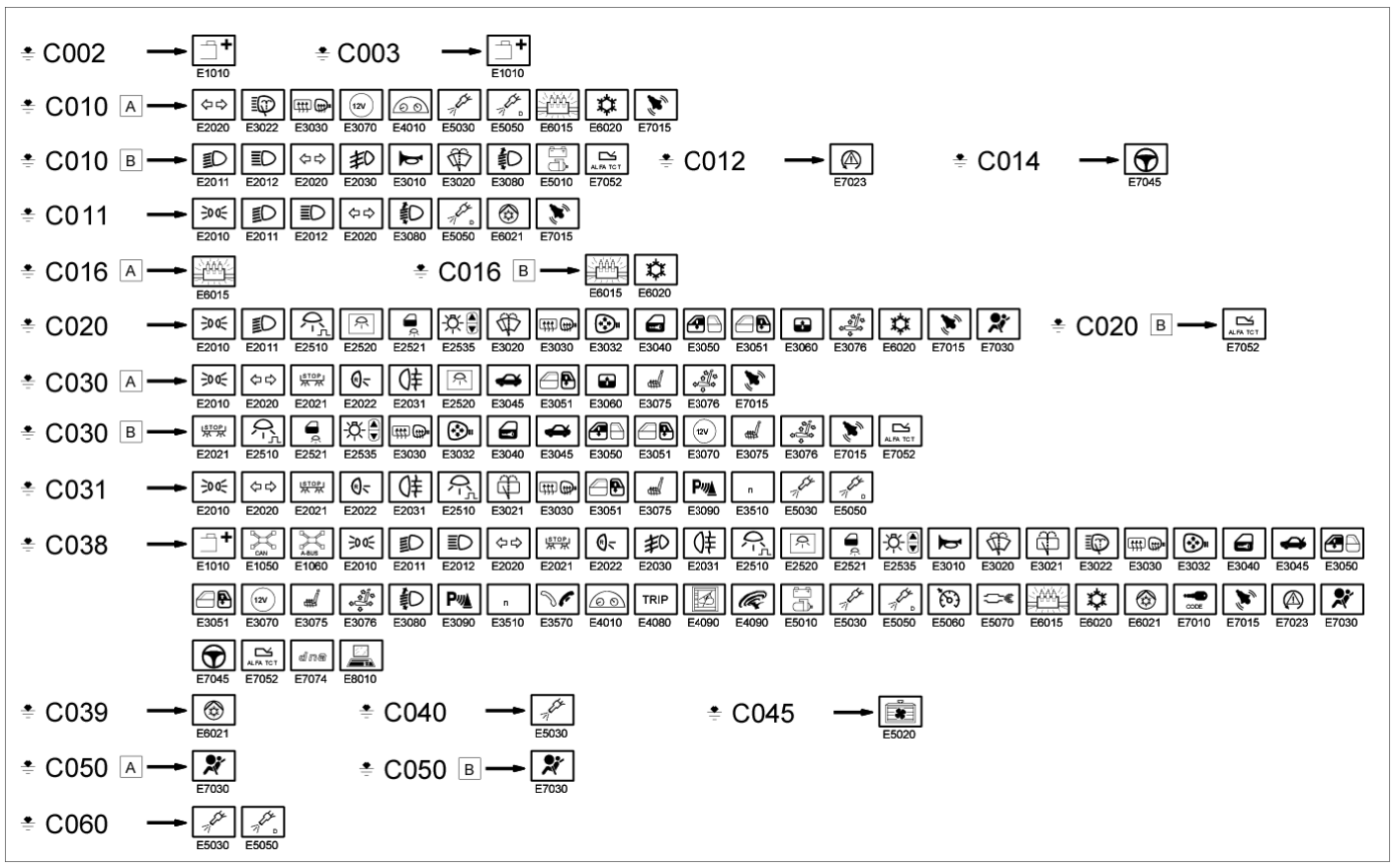

Component Code	Description	Reference to the operation
C002	BATTERY EARTH ON ENGINE	Op. 5530B22 BATTERY EARTH LEAD - R+R
C003	BATTERY EARTH ON BODYSHELL	Op. 5530B22 BATTERY EARTH LEAD - R+R
C010	LEFT FRONT EARTH	-
C011	RIGHT FRONT EARTH	-
C012	ABS FRONT EARTH	-
C014	ELECTRIC STEERING FRONT EARTH	-
C016	AIR CONDITIONING UNIT EARTH	-
C020	PASSENGER SIDE DASHBOARD EARTH	-
C030	LEFT REAR EARTH	-
C031	RIGHT REAR EARTH	-
C038	EARTH ON CENTRE TUNNEL	-
C039	COMPRESSOR EARTH	-
C040	EARTH ON ENGINE	-
C045	FAN EARTH	-
C050	AIR BAG SYSTEM EARTH	-
C060	INJECTION CONTROL UNIT EARTH	-

EARTHS - COMPONENT LOCATION

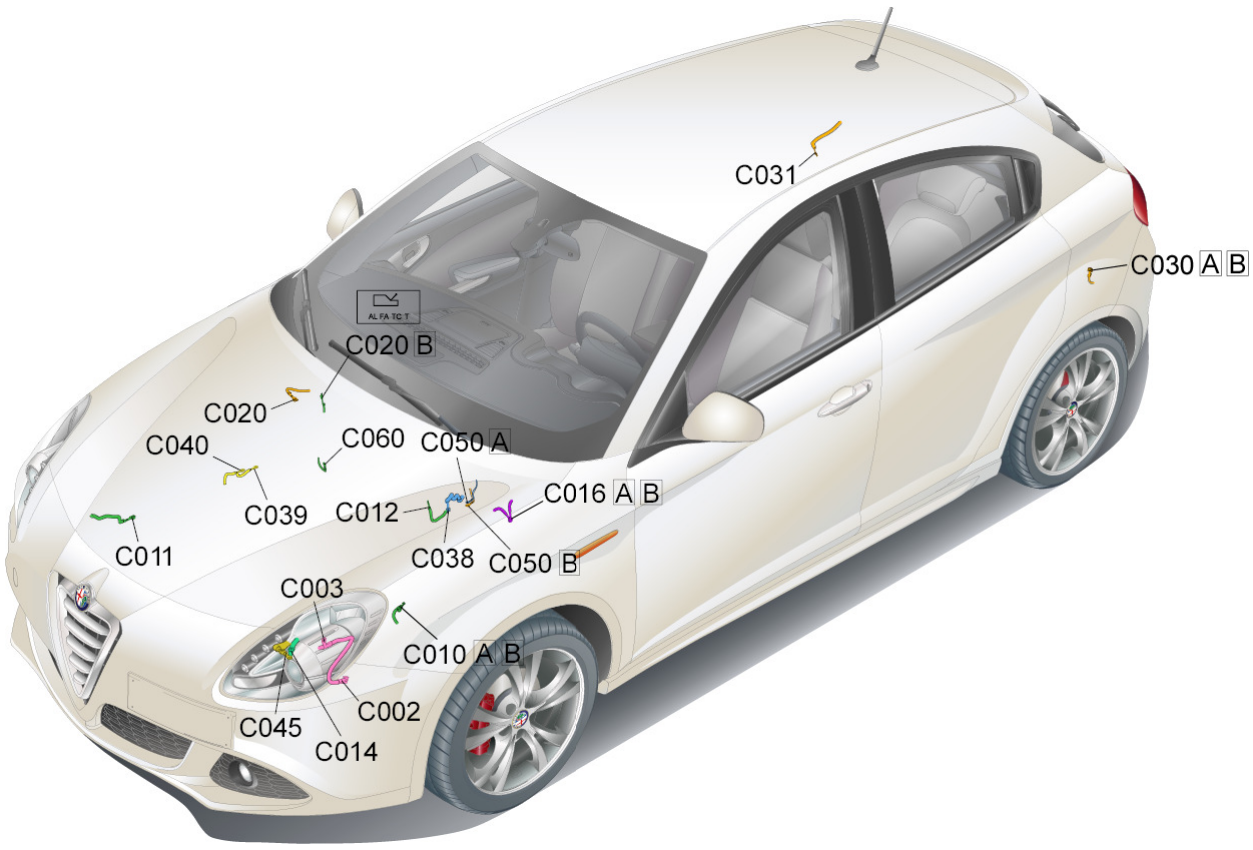

Component Code	Description	Reference to the operation
C002	BATTERY EARTH ON ENGINE	Op. 5530B22 BATTERY EARTH LEAD - R+R
C003	BATTERY EARTH ON BODYSHELL	Op. 5530B22 BATTERY EARTH LEAD - R+R
C010	LEFT FRONT EARTH	-
C011	RIGHT FRONT EARTH	-
C012	ABS FRONT EARTH	-
C014	ELECTRIC STEERING FRONT EARTH	-
C016	AIR CONDITIONING UNIT EARTH	-
C020	PASSENGER SIDE DASHBOARD EARTH	-
C030	LEFT REAR EARTH	-
C031	RIGHT REAR EARTH	-
C038	EARTH ON CENTRE TUNNEL	-
C039	COMPRESSOR EARTH	-
C040	EARTH ON ENGINE	-
C045	FAN EARTH	-
C050	AIR BAG SYSTEM EARTH	-
C060	INJECTION CONTROL UNIT EARTH	-